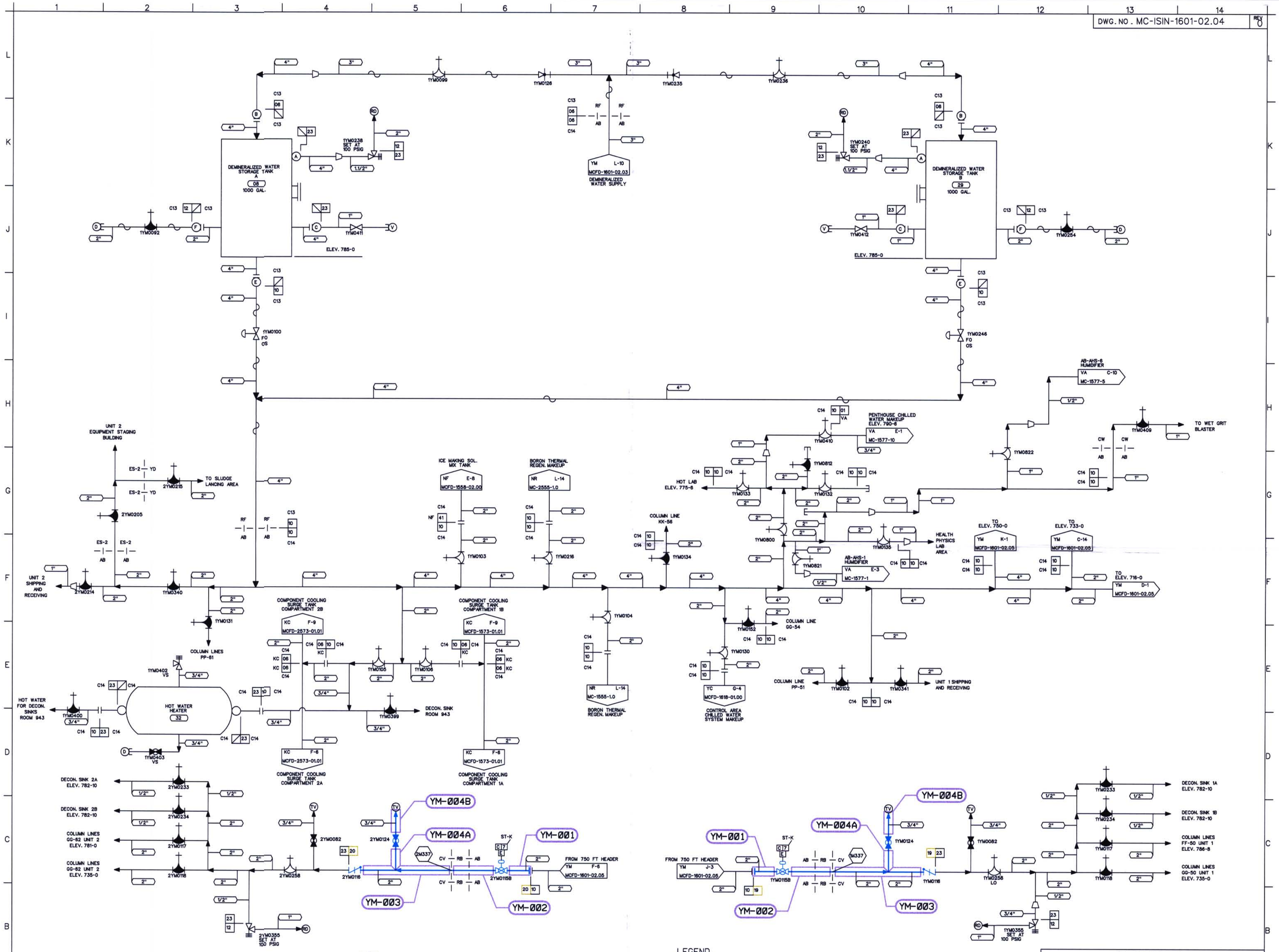

NOTES:

1. PIPING SHOWN IN BLUE IN THE FOLLOWING LINE LISTINGS IS EXEMPT PER IWC-1222(a): YM19, YM20.

DESIGN PARAMETERS

LINE LISTING	PIPE SPEC.	PRESSURE	TEMPERATURE	CLASS	MATERIAL
KC06	PS 151.4	150 PSIG	120 F	G	SS
NF41	PS 150.4	150 PSIG	120 F	G	CS
VA01		100 PSIG	120 F	G	CU
YM06	PS 157	150 PSIG	120 F	H	AL
YM10	PS 157	150 PSIG	120 F	H	AL
YM12	PS 150.4	150 PSIG	120 F	H	CS
YM19	PS 151.2	100 PSIG	250 F	B	SS
YM20	PS 151.2	150 PSIG	250 F	B	SS
YM23	PS 151.4	150 PSIG	120 F	H	SS

LEGEND

- ISI CLASS 1
- ISI CLASS 2
- ISI CLASS 3
- ISI EXEMPT
- NON-ISI

THIS DRAWING IS FOR INSERVICE INSPECTION ONLY AND SHALL NOT BE USED FOR OTHER PURPOSES SUCH AS MAINTENANCE, MODIFICATION, OR REPAIRS. THIS DRAWING SHALL BE REVISED WHEN AS-BUILT CHANGES AFFECT THE INSERVICE INSPECTION BOUNDARIES AND DETAILS OF THE COMPONENTS/SYSTEMS SHOWN.

REFERENCE FLOW DIAGRAM MCFD-1601-02.04 REV. 2
ERN:MC0099Z2

NO.	REVISIONS	DRN	DATE	CHKD	DATE	APPR	DATE
ORIG	RELEASED FOR ISI USE ONLY	TDM	11-7-00	PTF	11-8-00	RKR	12-14-00

W A I V E D — CIVIL, ELEC., MECH. — INSPECTED

QA CONDITION 1

DUKE POWER COMPANY
MCGUIRE NUCLEAR STATION UNIT 1 AND 2

ASME SECTION XI
INSERVICE INSPECTION NDE BOUNDARY OF MAKEUP DEMINERALIZED WATER SYSTEM (YM)

DESIGNER	TIM MYERS	DATE	11-7-00	INSP.	WAIVED DATE —
DRAWN	TIM MYERS	DATE	11-7-00	INSP.	WAIVED DATE —
CHECKED	GARY D. SCARBORO	DATE	11-7-00	APPR.	R. KEVIN RHYNE DATE 12-14-00

SCALE — DWG. NO. MC-ISIN-1601-02.04 — REV. 0

D-79