DWG. NO. MC-ISIL-1554-05.00 REV. 0

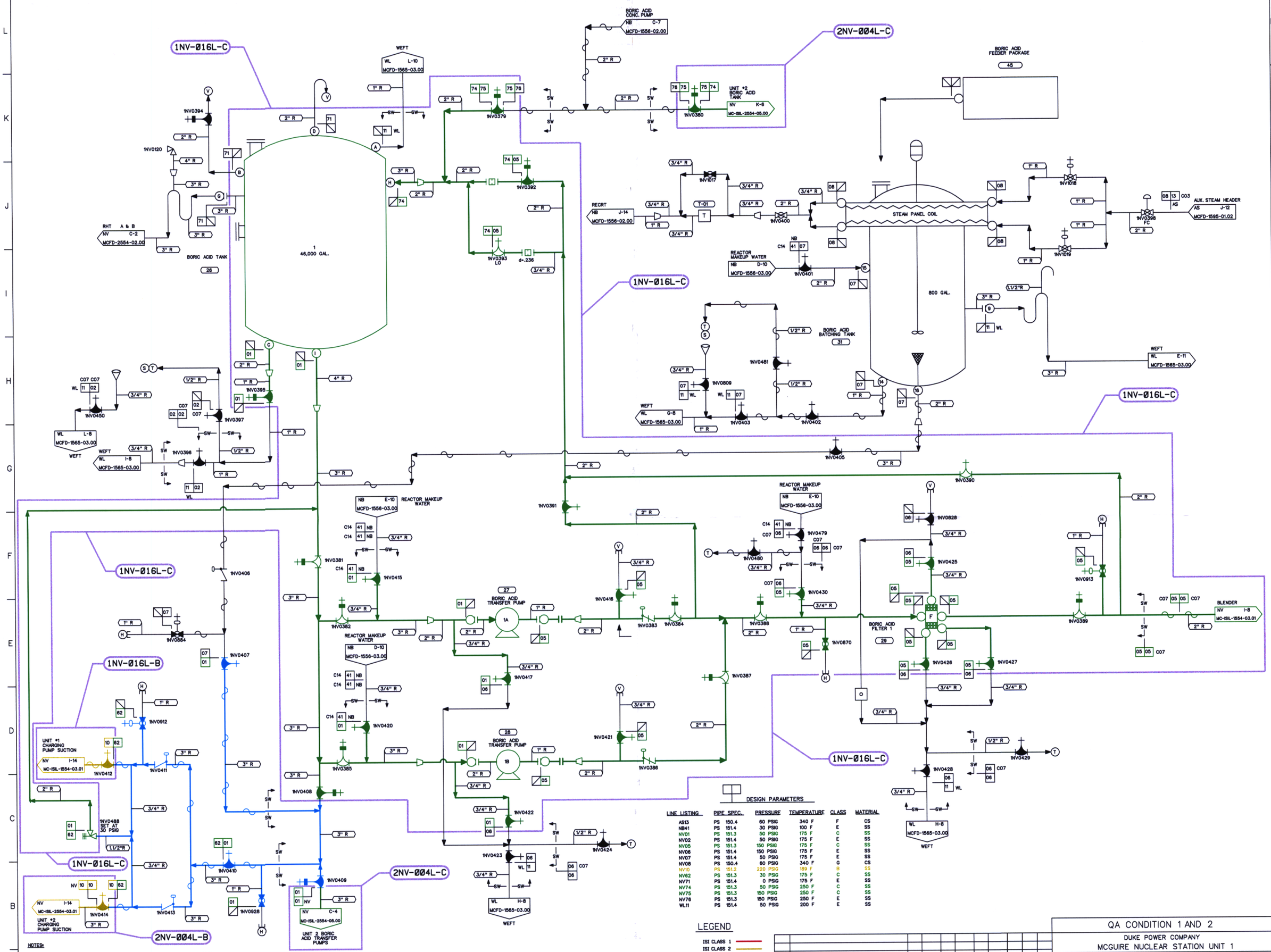

NOTES:

1. THE ISI EXEMPT BOUNDARIES SHOWN ON THIS DRAWING ARE EXEMPTED BECAUSE THEY SERVE NO SAFETY FUNCTION AS DETERMINED BY SITE ENGINEERING.

DESIGN PARAMETERS

LINE LISTING	PIPE SPEC.	PRESSURE	TEMPERATURE	CLASS	MATERIAL
AS13	PS 150.4	60 PSIG	340 F	F	CS
NB41	PS 151.4	30 PSIG	100 F	E	SS
NV01	PS 151.3	50 PSIG	175 F	C	SS
NV02	PS 151.4	50 PSIG	175 F	E	SS
NV05	PS 151.3	150 PSIG	175 F	C	SS
NV06	PS 151.4	150 PSIG	175 F	E	SS
NV07	PS 151.4	50 PSIG	175 F	E	SS
NV08	PS 150.4	60 PSIG	340 F	G	CS
NV10	PS 151.2	220 PSIG	189 F	B	SS
NV62	PS 151.3	30 PSIG	175 F	C	SS
NV71	PS 151.4	0 PSIG	175 F	E	SS
NV74	PS 151.3	50 PSIG	250 F	C	SS
NV75	PS 151.3	150 PSIG	250 F	C	SS
NV76	PS 151.3	150 PSIG	250 F	E	SS
WL11	PS 151.4	50 PSIG	200 F	E	SS

LEGEND

- ISI CLASS 1
- ISI CLASS 2
- ISI CLASS 3
- ISI EXEMPT
- ZONE BOUNDARY

UNIT 1 INSPECTION CRITERIA

COMPONENT	ZONE NUMBER	TYPE OF TEST	PLAN ADDENDUM NO	RI SEGMENT NO
CLASS B SYSTEM	1NV-016L-B	LEAKAGE	N/A	N/A
CLASS C SYSTEM	1NV-016L-C	LEAKAGE	N/A	N/A

UNIT 2 INSPECTION CRITERIA

COMPONENT	ZONE NUMBER	TYPE OF TEST	PLAN ADDENDUM NO	RI SEGMENT NO
CLASS B SYSTEM	2NV-004L-B	LEAKAGE	N/A	N/A
CLASS C SYSTEM	2NV-004L-C	LEAKAGE	N/A	N/A

THIS DRAWING IS FOR INSERVICE INSPECTION ONLY AND SHALL NOT BE USED FOR OTHER PURPOSES SUCH AS MAINTENANCE, MODIFICATION, OR REPAIRS. THIS DRAWING SHALL BE REVISED WHEN AS-BUILT CHANGES AFFECT THE INSERVICE INSPECTION BOUNDARIES AND DETAILS OF THE COMPONENTS/SYSTEMS SHOWN.

REFERENCE FLOW DIAGRAM MCFD-1554-05.00 REV. 5

ERN:MC009AVJ

NO.	REVISIONS	DRN	DATE	CHKD	DATE	APPR	DATE
ORIG	RELEASED FOR ISI USE ONLY	TDM	5-8-01	JMB	5-8-01	RKR	5-9-01

WAIVED — INSPECTED: CIVIL, ELEC., MECH.

QA CONDITION 1 AND 2

DUKE POWER COMPANY
MCGUIRE NUCLEAR STATION UNIT 1

ASME SECTION XI
INSERVICE INSPECTION PRESSURE TEST BOUNDARY OF CHEMICAL AND VOLUME CONTROL SYSTEM (NV)

DESIGNER TIM MYERS DATE 5-8-01 INSP. WAIVED DATE
DRAWN TIM MYERS DATE 5-8-01 INSP. WAIVED DATE
CHECKED JIM BOUGHMAN DATE 5-8-01 APPR. R. KEVIN RHYNE DATE 5-9-01

SCALE — DWG. NO. MC-ISIL-1554-05.00 REV. 0

D-113