DWG. NO. MC-ISIL-1553-04.00 REV 0

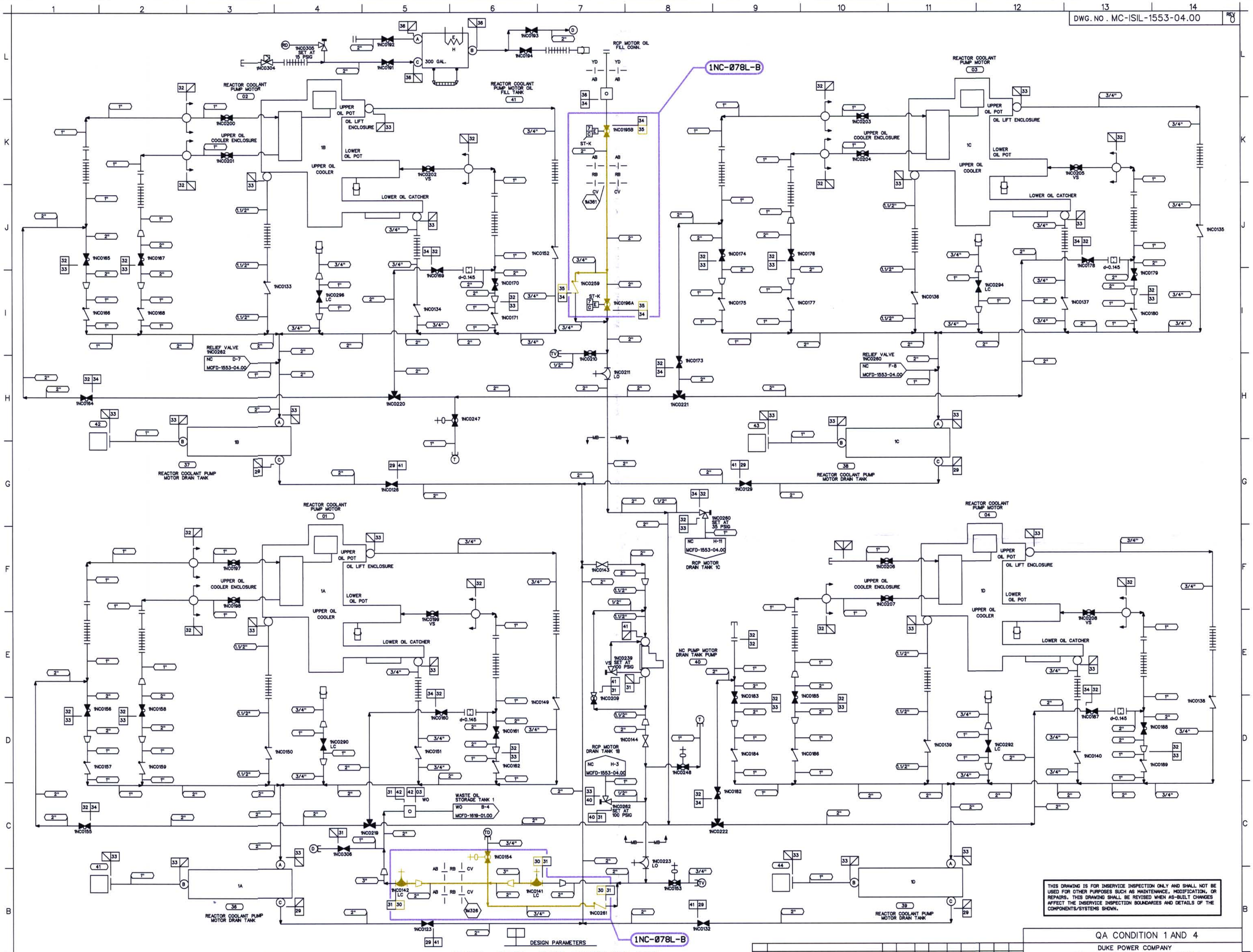

THIS DRAWING IS FOR INSERVICE INSPECTION ONLY AND SHALL NOT BE USED FOR OTHER PURPOSES SUCH AS MAINTENANCE, MODIFICATION, OR REPAIRS. THIS DRAWING SHALL BE REVISED WHEN AS-BUILT CHANGES AFFECT THE INSERVICE INSPECTION BOUNDARIES AND DETAILS OF THE COMPONENTS/SYSTEMS SHOWN.

COMPONENT	ZONE NUMBER	INSPECTION CRITERIA: TYPE OF TEST	PLAN ADDENDUM NO	RI SEGMENT NO
CLASS B SYSTEM	1NC-078L-B	LEAKAGE	N/A	N/A

DESIGN PARAMETERS

LINE LISTING	PIPE SPEC.	PRESSURE	TEMPERATURE	CLASS	MATERIAL
NC29	PS 150.4	35 PSIG	250 F	F	CS
NC30	PS 150.2	100 PSIG	250 F	B	CS
NC31	PS 150.4	100 PSIG	120 F	F	CS
NC32	PS 151.4	35 PSIG	250 F	F	SS
NC33	PS 150.4	35 PSIG	250 F	F	CS
NC34	PS 151.4	35 PSIG	120 F	F	SS
NC35	PS 151.2	35 PSIG	250 F	B	SS
NC36	PS 151.4	35 PSIG	120 F	G	SS
NC40	PS 151.4	100 PSIG	250 F	F	SS
NC41	PS 150.4	35 PSIG	120 F	F	CS
NC42	PS 150.4	100 PSIG	120 F	G	CS
WO03	PS 150.4	100 PSIG	120 F	G	CS

LEGEND
- ISI CLASS 1
- ISI CLASS 2
- ISI CLASS 3
- ISI EXEMPT
- ZONE BOUNDARY

NO.	REVISIONS	DRN	DATE	CHKD	DATE	APPR	DATE	CIVIL	ELEC.	MECH
ORIG	RELEASED FOR ISI USE ONLY	TDM	5-8-01	JMB	5-7-01	RKR	5-9-01	W A I V E D		

INSPECTED

QA CONDITION 1 AND 4

DUKE POWER COMPANY
MCGUIRE NUCLEAR STATION UNIT 1

ASME SECTION XI
INSERVICE INSPECTION PRESSURE TEST BOUNDARY OF REACTOR COOLANT SYSTEM
(NC)

DESIGNER TIM MYERS DATE 5-8-01 INSP. WAIVED DATE
DRAWN TIM MYERS DATE 5-8-01 INSP. WAIVED DATE
CHECKED JIM BOUGHMAN DATE 5-7-01 APPR. R. KEVIN RHYNE DATE 5-9-01
SCALE DWG. NO. MC-ISIL-1553-04.00 REV 0

REFERENCE FLOW DIAGRAM MCFD-1553-04.00 REV. 2
ERN: MC009AVA

D-104