DWG. NO. MC-ISIL-1553-02.00 REV 0

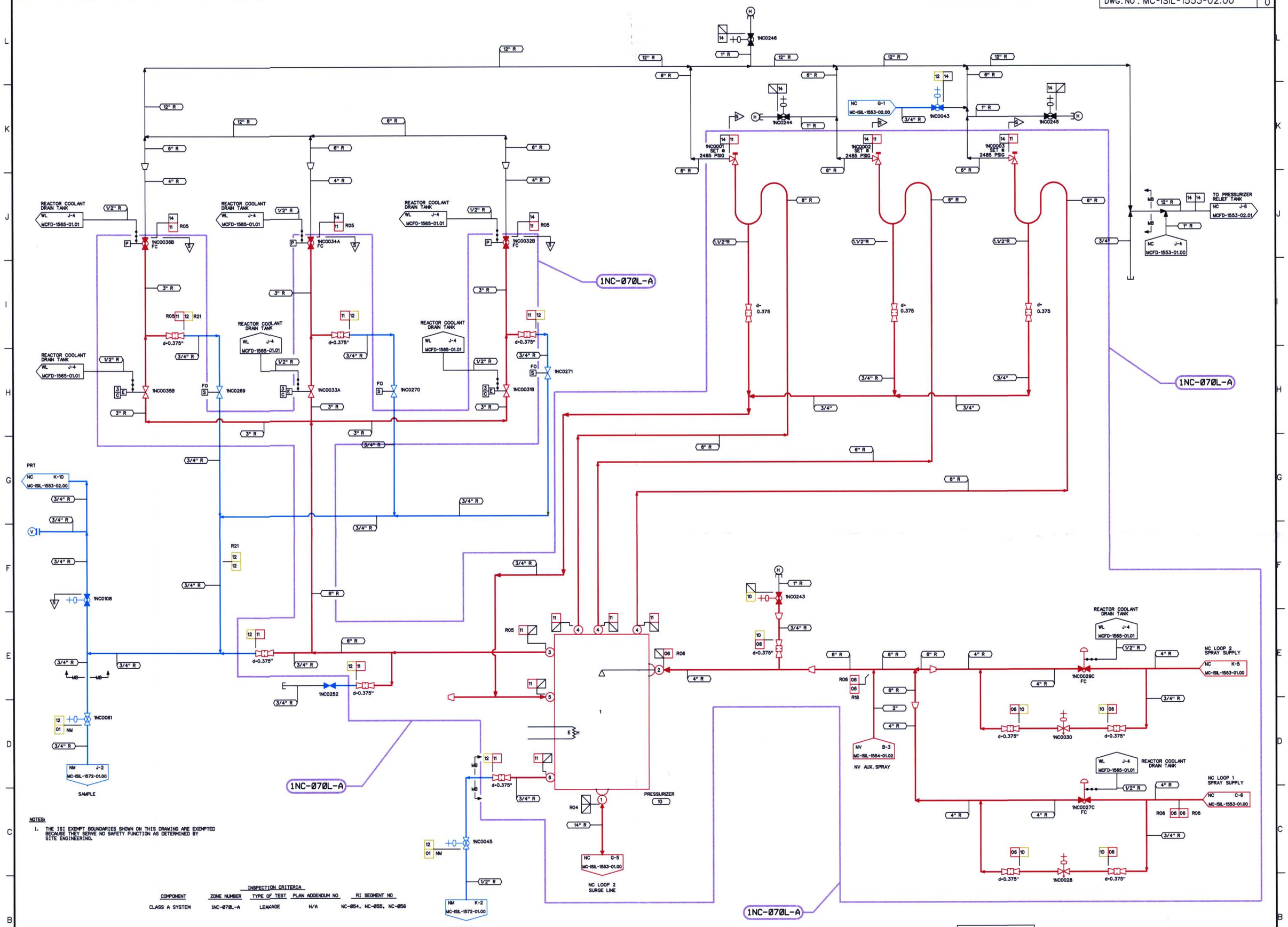

NOTES:

1. THE ISI EXEMPT BOUNDARIES SHOWN ON THIS DRAWING ARE EXEMPTED BECAUSE THEY SERVE NO SAFETY FUNCTION AS DETERMINED BY SITE ENGINEERING.

INSPECTION CRITERIA

COMPONENT	ZONE NUMBER	TYPE OF TEST	PLAN ADDENDUM NO	RI SEGMENT NO
CLASS A SYSTEM	1NC-070L-A	LEAKAGE	N/A	NC-054, NC-055, NC-056

DESIGN PARAMETERS

LINE LISTING	PIPE SPEC.	PRESSURE	TEMPERATURE	CLASS	MATERIAL
NC06	PS 2501.1	2485 PSIG	650 F	A	SS
NC10	PS 2501.2	2485 PSIG	650 F	B	SS
NC11	PS 2501.1	2485 PSIG	680 F	A	SS
NC12	PS 2501.2	2485 PSIG	670 F	B	SS
NC14	PS 601.4	500 PSIG	470 F	E	SS
NM01	PS 2501.2	2485 PSIG	670 F	B	SS

LEGEND

- ISI CLASS 1
- ISI CLASS 2
- ISI CLASS 3
- ISI EXEMPT
- ZONE BOUNDARY

THIS DRAWING IS FOR INSERVICE INSPECTION ONLY AND SHALL NOT BE USED FOR OTHER PURPOSES SUCH AS MAINTENANCE, MODIFICATION, OR REPAIRS. THIS DRAWING SHALL BE REVISED WHEN AS-BUILT CHANGES AFFECT THE INSERVICE INSPECTION BOUNDARIES AND DETAILS OF THE COMPONENTS/SYSTEMS SHOWN.

S-S-S
STANDBY SHUTDOWN SYSTEM

NO.	REVISIONS	DRN	DATE	CHKD	DATE	APPR	DATE	CIVIL	ELEC.	MECH
ORIG	RELEASED FOR ISI USE ONLY	TDM	5-8-01	JMB	5-8-01	RKR	5-9-01	W A I V E D		

INSPECTED

QA CONDITION 1 AND 2

DUKE POWER COMPANY
MCGUIRE NUCLEAR STATION UNIT 1

ASME SECTION XI
INSERVICE INSPECTION PRESSURE TEST BOUNDARY OF REACTOR COOLANT SYSTEM
(NC)

DESIGNER	TIM MYERS	DATE 5-8-01	INSP	WAIVED	DATE
DRAWN	TIM MYERS	DATE 5-8-01	INSP	WAIVED	DATE
CHECKED	JIM BOUGHMAN	DATE 5-8-01	APPR	R. KEVIN RHYNE	DATE 5-9-01

SCALE DWG. NO. MC-ISIL-1553-02.00 REV 0

REFERENCE FLOW DIAGRAM
MCFD-1553-02.00 REV. 4

ERN: MC009AV9

D-102