DWG. NO. MC-ISIL-1553-01.00 REV 0

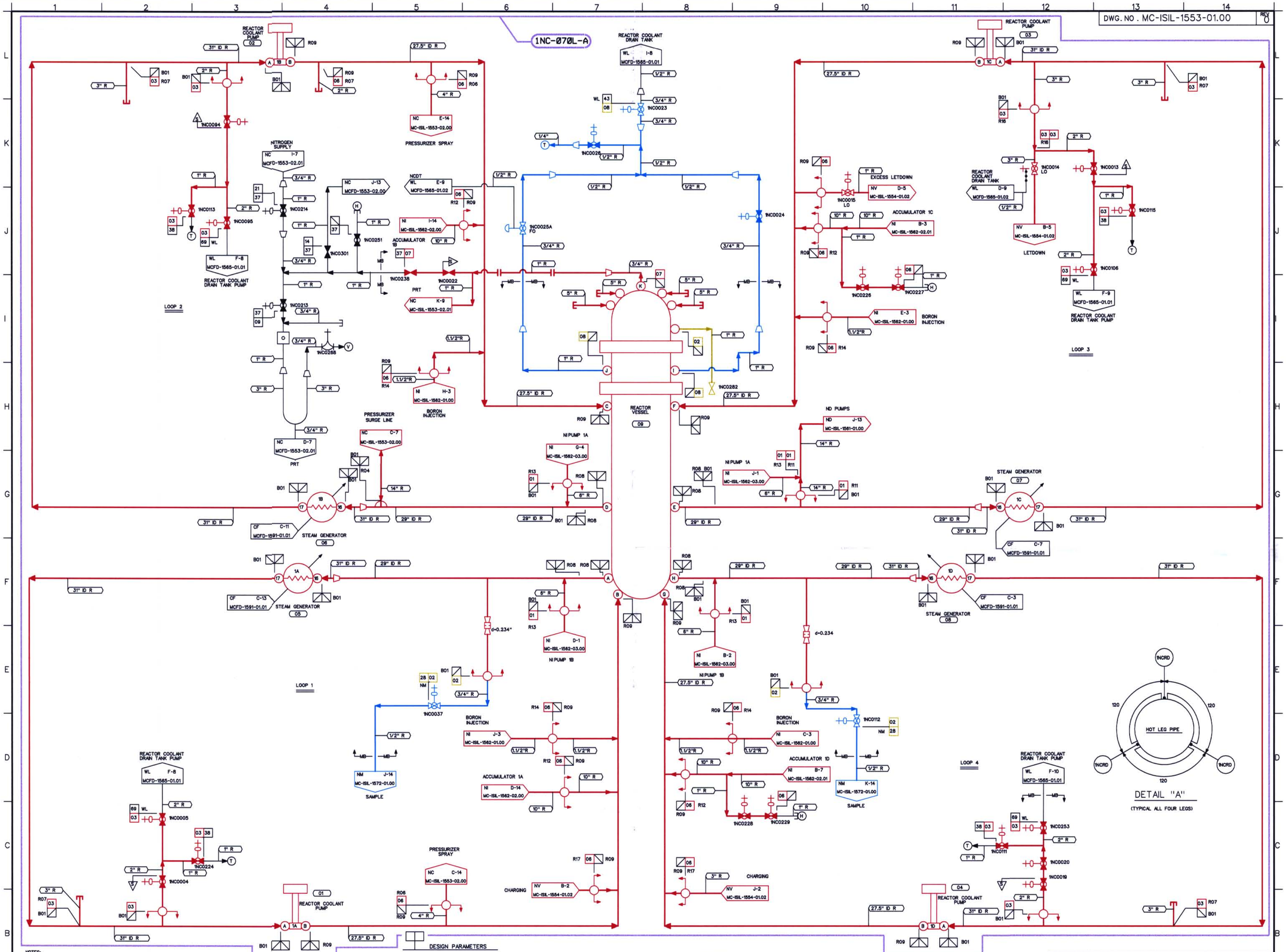

NOTES:

1. THE ISI EXEMPT BOUNDARIES SHOWN ON THIS DRAWING ARE EXEMPTED BECAUSE THEY SERVE NO SAFETY FUNCTION AS DETERMINED BY SITE ENGINEERING.
2. THE CLASS B BOUNDARY IS FOR RI SEGMENT NC-090.

1NC-070L-A

INSPECTION CRITERIA

COMPONENT	ZONE NUMBER	TYPE OF TEST	PLAN ADDENDUM NO	RI SEGMENT NO
CLASS A SYSTEM	1NC-070L-A	LEAKAGE	N/A	NC-18, NC-19, NC-20 NC-21, NC-23, NC-86, NC-89
CLASS B SYSTEM	1NC-070L-A	LEAKAGE	N/A	NC-90

DESIGN PARAMETERS

LINE LISTING	PIPE SPEC.	PRESSURE	TEMPERATURE	CLASS	MATERIAL
NC01	PS 2501.1	2485 PSIG	650 F	A	SS
NC02	PS 2501.2	2485 PSIG	650 F	B	SS
NC03	PS 2501.1	2485 PSIG	650 F	A	SS
NC06	PS 2501.1	2485 PSIG	650 F	A	SS
NC07	PS 2501.1	2485 PSIG	650 F	A	SS
NC08	PS 2501.2	2485 PSIG	650 F	B	SS
NC09	PS 2501.4	50 PSIG	400 F	E	SS
NC14	PS 601.4	500 PSIG	680 F	E	SS
NC21	PS 151.4	100 PSIG	200 F	E	SS
NC37	PS 2501.4	2485 PSIG	650 F	E	SS
NC38	PS 2501.4	2485 PSIG	650 F	E	SS
NM28	PS 2501.2	2485 PSIG	650 F	B	SS
WL01	PS 151.4	100 PSIG	200 F	E	SS
WL43	TS 2701.1	100 PSIG	200 F	E	ST
WL69	PS 2501.4	2485 PSIG	200 F	E	SS

LEGEND

- ISI CLASS 1
- ISI CLASS 2
- ISI CLASS 3
- ISI EXEMPT
- ZONE BOUNDARY

S-S-S
STANDBY SHUTDOWN SYSTEM

THIS DRAWING IS FOR INSERVICE INSPECTION ONLY AND SHALL NOT BE USED FOR OTHER PURPOSES SUCH AS MAINTENANCE, MODIFICATION, OR REPAIRS. THIS DRAWING SHALL BE REVISED WHEN AS-BUILT CHANGES AFFECT THE INSERVICE INSPECTION BOUNDARIES AND DETAILS OF THE COMPONENTS/SYSTEMS SHOWN.

NO.	REVISIONS	DRN	DATE	CHKD	DATE	APPR	DATE
ORIG	RELEASED FOR ISI USE ONLY	TDM	5-9-01	JMB	5-9-01	RKR	5-9-01

WAIVED — CIVIL, ELEC., MECH — INSPECTED

QA CONDITION 1 AND 2

DUKE POWER COMPANY
MCGUIRE NUCLEAR STATION UNIT 1

ASME SECTION XI
INSERVICE INSPECTION PRESSURE TEST BOUNDARY OF REACTOR COOLANT SYSTEM
(NC)

DESIGNER TIM MYERS DATE 5-9-01 INSP WAIVED DATE
DRAWN TIM MYERS DATE 5-9-01 INSP WAIVED DATE
CHECKED JIM BOUGHMAN DATE 5-9-01 APPR R. KEVIN RHYNE DATE 5-9-01
SCALE DWG. NO. MC-ISIL-1553-01.00 REV 0

REFERENCE FLOW DIAGRAM MCFD-1553-01.00 REV. 5
ERN:MC009AV7

D-101