DWG. NO. MC-ISIN-1576-01.00 REV. 0

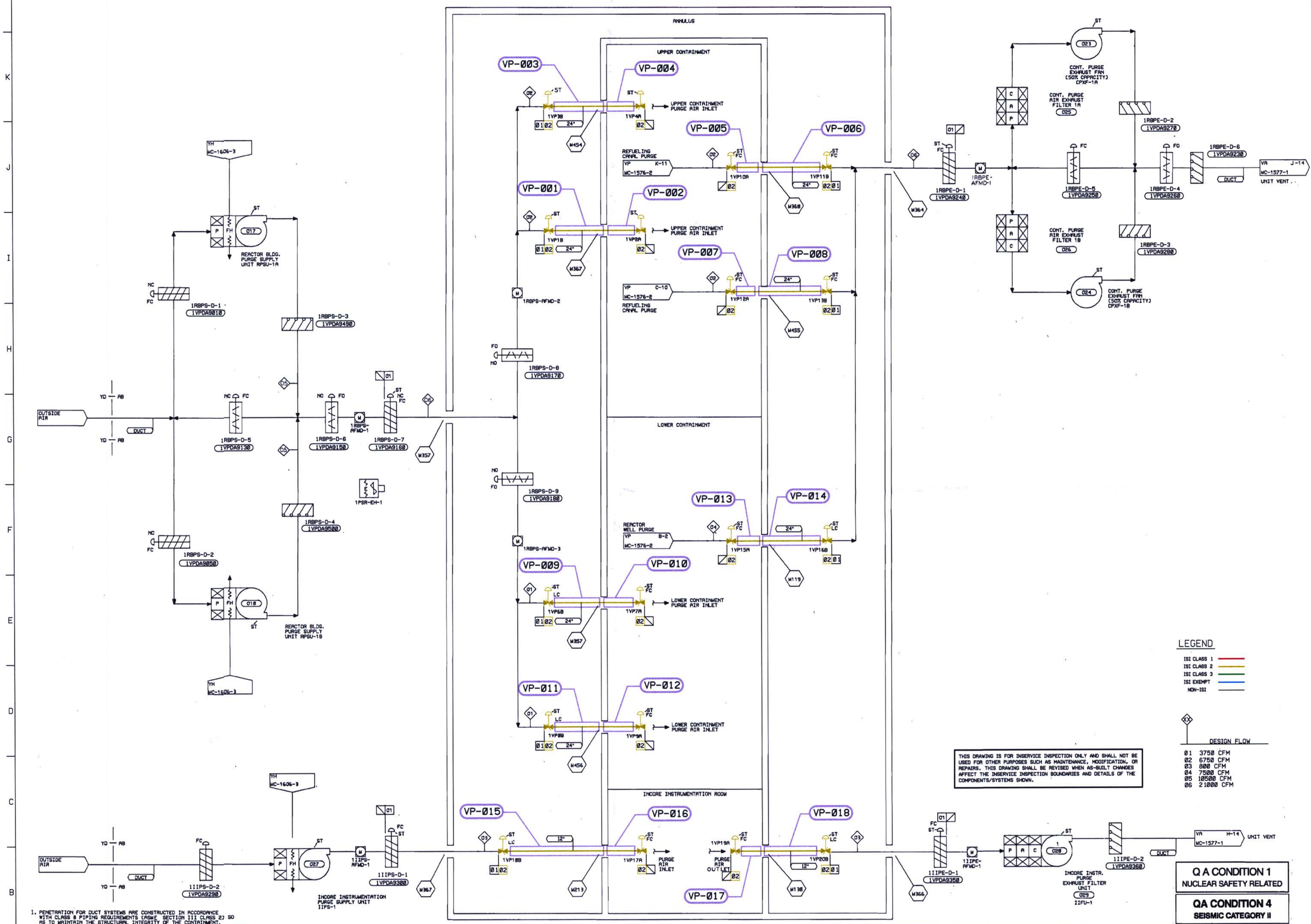

LEGEND

- ISI CLASS 1
- ISI CLASS 2
- ISI CLASS 3
- ISI EXEMPT
- NON-ISI

DESIGN FLOW

01	3750 CFM
02	6750 CFM
03	800 CFM
04	7500 CFM
05	10500 CFM
06	21000 CFM

THIS DRAWING IS FOR INSERVICE INSPECTION ONLY AND SHALL NOT BE USED FOR OTHER PURPOSES SUCH AS MAINTENANCE, MODIFICATION, OR REPAIRS. THIS DRAWING SHALL BE REVISED WHEN AS-BUILT CHANGES AFFECT THE INSERVICE INSPECTION BOUNDARIES AND DETAILS OF THE COMPONENTS/SYSTEMS SHOWN.

Q A CONDITION 1
NUCLEAR SAFETY RELATED

QA CONDITION 4
SEISMIC CATEGORY II

1. PENETRATION FOR DUCT SYSTEMS ARE CONSTRUCTED IN ACCORDANCE WITH CLASS B PIPING REQUIREMENTS (ASME SECTION III CLASS 2) SO AS TO MAINTAIN THE STRUCTURAL INTEGRITY OF THE CONTAINMENT. TESTING OF THE PENETRATIONS SHALL BE IN ACCORDANCE WITH ASME SECTION III, DIVISION I, SUBSECTION NC-6300, DESIGN PRESSURE SHALL BE SAME AS THE CONTAINMENT PRESSURE, 15 PSIG, AS GIVEN IN DOCUMENT ENTITLED "MCGUIRE NUCLEAR STATION DESCRIPTION OF LEAKRATE TEST INSTRUMENTATION SYSTEM, PARAGRAPH 3.C". DESIGN TEMPERATURE WILL BE 250°F.

2. THE REACTOR PURGE SYSTEM IS CONSTRUCTED OF DUKE PIPING CLASS B AND H. THE CLASS H PIPING WAS SUPPORTED TO Q.A.4. THE CLASS B PIPING WAS CONSTRUCTED TO Q.A.1. REFER TO REG. GUIDE 1.26. THIS PIPING FUNCTIONS AS AN AIR SUPPLY/EXHAUST DUCT SYSTEM. PORTIONS OF DUCTWORK OUTSIDE THE REACTOR BUILDING ARE SUPPORTED Q.A.4 TO PROTECT OTHER EQUIPMENT.

DESIGN PARAMETERS

LINE LISTING	PRESSURE	TEMP	CLASS	MATERIAL	PIPE SPEC
01	—	—	H	—	—
02	15 PSIG	250°F	B	CS	PS 150.9 (SEE NOTE 1)

NO.	REVISIONS	DRN	DATE	CHKD	DATE	APPR	DATE
ORIG.	RELEASED FOR ISI USE ONLY	TDM	11-7-00	PTF	11-8-00	RKR	12-14-00

WAIVED — CIVIL, ELEC., MECH. — INSPECTED

DUKE POWER COMPANY
MCGUIRE NUCLEAR STATION UNIT 1

ASME SECTION XI
INSERVICE INSPECTION NDE BOUNDARY OF CONTAINMENT PURGE VENTILATION SYSTEM (VP)

DESIGNER TIM MYERS DATE 11-7-00 INSP. WAIVED DATE —
DRAWN TIM MYERS DATE 11-7-00 INSP. WAIVED DATE —
CHECKED GARY D SCARBORO DATE 11-7-00 APPR. R. KEVIN RHYNE DATE 12-14-00
SCALE DWG. NO. MC-ISIN-1576-01.00 REV. 0

REFERENCE FLOW DIAGRAM
MC-1576-01.00 REV. 28
ERN: MC009ALZ

D-67