DWG. NO. MC-ISIN-1567-02.00 REV 0

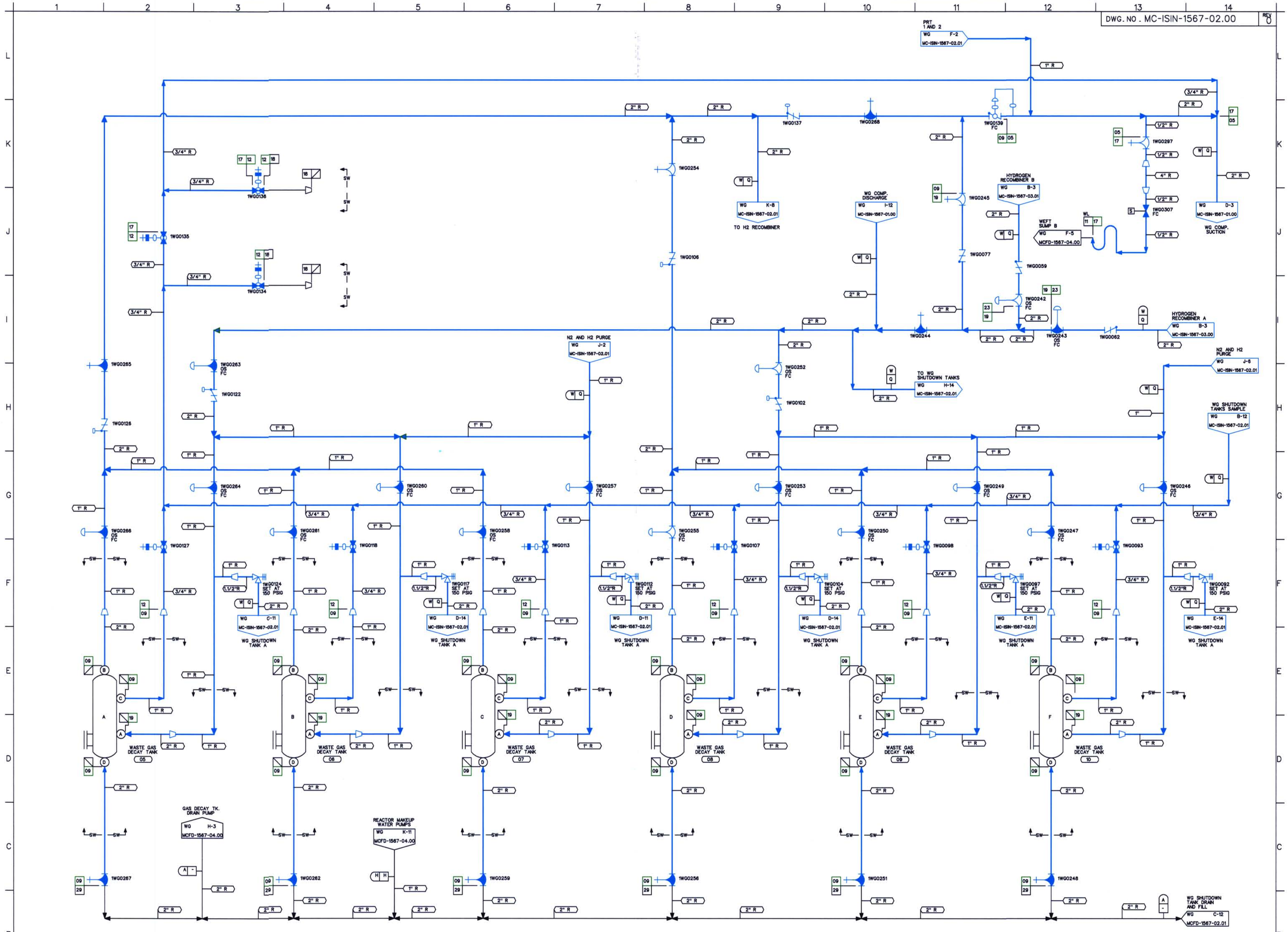

NOTES:

1. PIPING SHOWN IN BLUE IN THE FOLLOWING LINE LISTINGS IS EXEMPT DUE TO NOT BEING CONSIDERED A PART OF D-A CATEGORY PER ENG. NOTE DATED 5/22/00: WG05, WG09, WG12, WG17, WG19, WG23.

DESIGN PARAMETERS

LINE LISTING	PIPE SPEC.	PRESSURE	TEMPERATURE	CLASS	MATERIAL
WG05	PS 150.3	100 PSIG	180 F	C	CS
WG09	PS 150.3	150 PSIG	140 F	C	CS
WG12	PS 151.3	150 PSIG	140 F	C	SS
WG17	PS 151.3	100 PSIG	140 F	C	SS
WG18	PS 151.4	150 PSIG	140 F	E	SS
WG19	PS 150.3	150 PSIG	140 F	C	CS
WG23	PS 151.3	150 PSIG	140 F	C	SS
WG29	PS 150.4	150 PSIG	140 F	E	CS
WL11	PS 151.4	50 PSIG	200 F	E	SS

LEGEND

- ISI CLASS 1
- ISI CLASS 2
- ISI CLASS 3
- ISI EXEMPT
- NON-ISI

THIS DRAWING IS FOR INSERVICE INSPECTION ONLY AND SHALL NOT BE USED FOR OTHER PURPOSES SUCH AS MAINTENANCE, MODIFICATION, OR REPAIRS. THIS DRAWING SHALL BE REVISED WHEN AS-BUILT CHANGES AFFECT THE INSERVICE INSPECTION BOUNDARIES AND DETAILS OF THE COMPONENTS/SYSTEMS SHOWN.

NO.	REVISIONS	DRN	DATE	CHKD	DATE	APPR	DATE
ORIG	RELEASED FOR ISI USE ONLY	TDM	11-7-00	GDS	11-13-00	RKR	12-14-00

W A I V E D — CIVIL, ELEC., MECH. — INSPECTED

QA CONDITION 1 AND 2

DUKE POWER COMPANY
MCGUIRE NUCLEAR STATION UNIT 1

ASME SECTION XI
INSERVICE INSPECTION NDE BOUNDARY OF
WASTE GAS SYSTEM
(WG)

DESIGNER	TIM MYERS	DATE 11-7-00	INSP.	WAIVED	DATE —
DRAWN	TIM MYERS	DATE 11-7-00	INSP.	WAIVED	DATE —
CHECKED	GARY D SCARBORO	DATE 11-7-00	APPR.	R. KEVIN RHYNE	DATE 12-14-00

SCALE — DWG. NO. MC-ISIN-1567-02.00 — REV 0

REFERENCE FLOW DIAGRAM
MCFD-1567-02.00 REV. 1
ERN:MC0099X7

D-40