DWG. NO. MC-ISIN-1574-01.00 REV 0

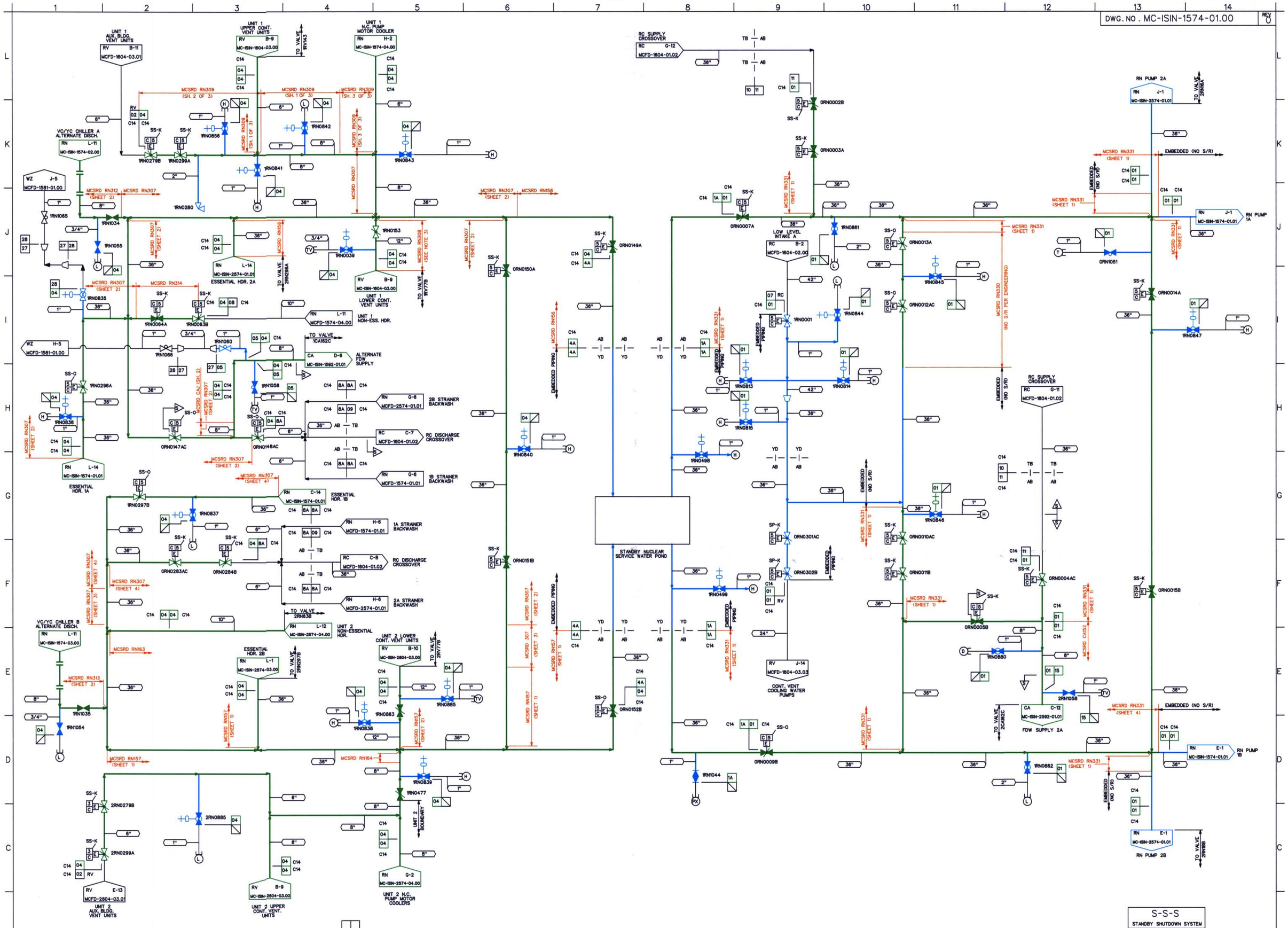

NOTES:

1. PIPING SHOWN IN BLUE IN THE FOLLOWING LINE LISTINGS SHALL BE EXEMPT PER IWD-1220(a) AND/OR (d): RN01, RN01A, RN04, RN04A, RN05, RN15.
2. WELD ISO & MATH MODEL DRAWING REFERENCES ARE APPROXIMATE AND ARE FOR INFORMATION ONLY.
3. NO S/R ON MCSRD RN308 PER NOTE FROM SECOND INTERVAL DWG.

DESIGN PARAMETERS

LINE LISTING	PIPE SPEC.	PRESSURE	TEMPERATURE	CLASS	MATERIAL
RC07	PS 150.4	30 PSIG	100 F	H	CS
RN01	PS 150.3	35 PSIG	95 F	C	CS
RN04	PS 150.3	135 PSIG	150 F	C	CS/SS
RN05	PS 151.3	135 PSIG	150 F	C	SS
RN08	PS 150.4	135 PSIG	150 F	F	CS
RN09	PS 150.4	40 PSIG	150 F	G	CS
RN10	PS 150.4	35 PSIG	95 F	G	CS
RN11	PS 150.4	35 PSIG	95 F	F	CS
RN15	PS 151.3	35 PSIG	95 F	C	SS
RN1A	PS 150.3	25 PSIG	95 F	C	CS
RN27	TS 2701.1	135 PSIG	150 F	F	ST
RN28	PS 151.4	135 PSIG	150 F	F	SS
RN4A	PS 150.3	30 PSIG	150 F	C	CS
RN8A	PS 150.4	40 PSIG	150 F	F	CS
RV01	PS 150.4	135 PSIG	150 F	F	CS
RV02	PS 150.4	135 PSIG	150 F	G	CS
RV04	PS 150.4	135 PSIG	150 F	F	CS

LEGEND

- ISI CLASS 1
- ISI CLASS 2
- ISI CLASS 3
- ISI EXEMPT
- NON-ISI

THIS DRAWING IS FOR INSERVICE INSPECTION ONLY AND SHALL NOT BE USED FOR OTHER PURPOSES SUCH AS MAINTENANCE, MODIFICATION, OR REPAIRS. THIS DRAWING SHALL BE REVISED WHEN AS-BUILT CHANGES AFFECT THE INSERVICE INSPECTION BOUNDARIES AND DETAILS OF THE COMPONENTS/SYSTEMS SHOWN.

NO.	REVISIONS	DRN	DATE	CHKD	DATE	APPR	DATE
ORIG	RELEASED FOR ISI USE ONLY	TDM	11-7-00	GDS	11-13-00	RKR	12-14-00

W A I V E D — CIVIL ELEC. MECH. — INSPECTED

QA CONDITION 1 AND 4

DUKE POWER COMPANY
MCGUIRE NUCLEAR STATION UNIT 1 & 2

ASME SECTION XI
INSERVICE INSPECTION NDE BOUNDARY OF NUCLEAR SERVICE WATER SYSTEM (RN)

DESIGNER	TIM MYERS	DATE 11-7-00	INSP.	WAIVED	DATE —
DRAWN	TIM MYERS	DATE 11-7-00	INSP.	WAIVED	DATE —
CHECKED	GARY D SCARBORO	DATE 11-7-00	APPR.	R. KEVIN RHYNE	DATE 12-14-00

SCALE — DWG. NO. MC-ISIN-1574-01.00 REV 0

REFERENCE FLOW DIAGRAM MCFD-1574-01.00 REV. 5

ERN: MC0099YC

D-60