DWG. NO. MC-ISIN-1593-01.02 REV 0

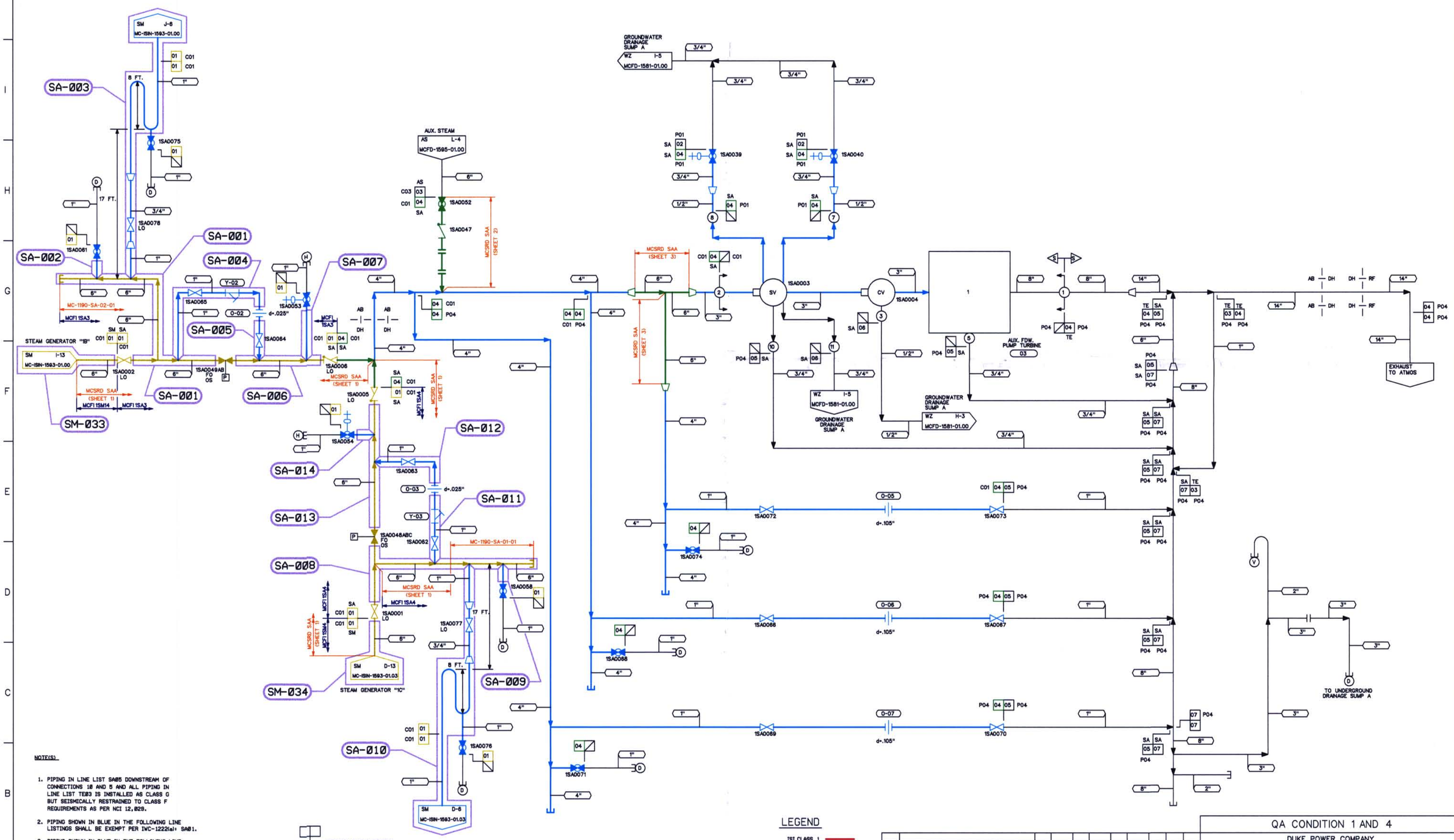

NOTE(S)

1. PIPING IN LINE LIST SA05 DOWNSTREAM OF CONNECTIONS 10 AND 5 AND ALL PIPING IN LINE LIST TE03 IS INSTALLED AS CLASS G BUT SEISMICALLY RESTRAINED TO CLASS F REQUIREMENTS AS PER NCI 12,029.
2. PIPING SHOWN IN BLUE IN THE FOLLOWING LINE LISTINGS SHALL BE EXEMPT PER IWC-1222(a): SA01.
3. PIPING SHOWN IN BLUE IN THE FOLLOWING LINE LISTINGS SHALL BE EXEMPT PER IWD-1220(a)(1): SA04.
4. WELD ISO & MATH MODEL DRAWING REFERENCES ARE APPROXIMATE AND ARE FOR INFORMATION ONLY.

DESIGN PARAMETERS

LINE LISTING	PIPE SPEC.	PRESSURE	TEMPERATURE	CLASS	MATERIAL	
AS03	PS 300.4	200 PSIG	390 F	G	CS	
SA01	PS 900.2	1185 PSIG	567 F	B	CS	
SA02	PS 900.4	1185 PSIG	567 F	G	CS	
SA04	PS 900.3	1185 PSIG	567 F	C	CS	
SA05	PS 150.4	150 PSIG	350 F	F	CS	NOTE 1
SA06	PS 150.4	150 PSIG	350 F	G	CS	
SA07	PS 151.4	150 PSIG	350 F	F	SS	
SM01	PS 1500.5	1185 PSIG	567 F	B	CS	
TE03	PS 150.4	150 PSIG	350 F	F	CS	NOTE 1
TE04	PS 150.4	50 PSIG	300 F	F	CS	

LEGEND

- ISI CLASS 1
- ISI CLASS 2
- ISI CLASS 3
- ISI EXEMPT
- NON-ISI

THIS DRAWING IS FOR INSERVICE INSPECTION ONLY AND SHALL NOT BE USED FOR OTHER PURPOSES SUCH AS MAINTENANCE, MODIFICATION, OR REPAIRS. THIS DRAWING SHALL BE REVISED WHEN AS-BUILT CHANGES AFFECT THE INSERVICE INSPECTION BOUNDARIES AND DETAILS OF THE COMPONENTS/SYSTEMS SHOWN.

REFERENCE FLOW DIAGRAM MCFD-1593-01.02 REV. 1

ERN: MC0099YR

NO.	REVISIONS	DRN	DATE	CHKD	DATE	APPR	DATE	CIVIL	ELEC.	MECH
ORIG	RELEASED FOR ISI USE ONLY	TDM	12-12-00	PTF	12-12-00	RKR	12-14-00	W A I V E D		

INSPECTED

QA CONDITION 1 AND 4

DUKE POWER COMPANY
MCGUIRE NUCLEAR STATION UNIT 1

ASME SECTION XI
INSERVICE INSPECTION NDE BOUNDARY OF
MAIN STEAM SUPPLY TO AUXILIARY
EQUIPMENT SYSTEM (SA) TURBINE EXHAUST SYSTEM (TE)

DESIGNER	TIM MYERS	DATE	12-12-00	INSP.	WAIVED DATE —
DRAWN	TIM MYERS	DATE	12-12-00	INSP.	WAIVED DATE —
CHECKED	GARY D SCARBORO	DATE	12-13-00	APPR.	R. KEVIN RHYNE DATE 12-14-00

SCALE DWG. NO. MC-ISIN-1593-01.02 REV 0

D-76