DWG. NO . MC-ISIN-1566-01.00 REV 0

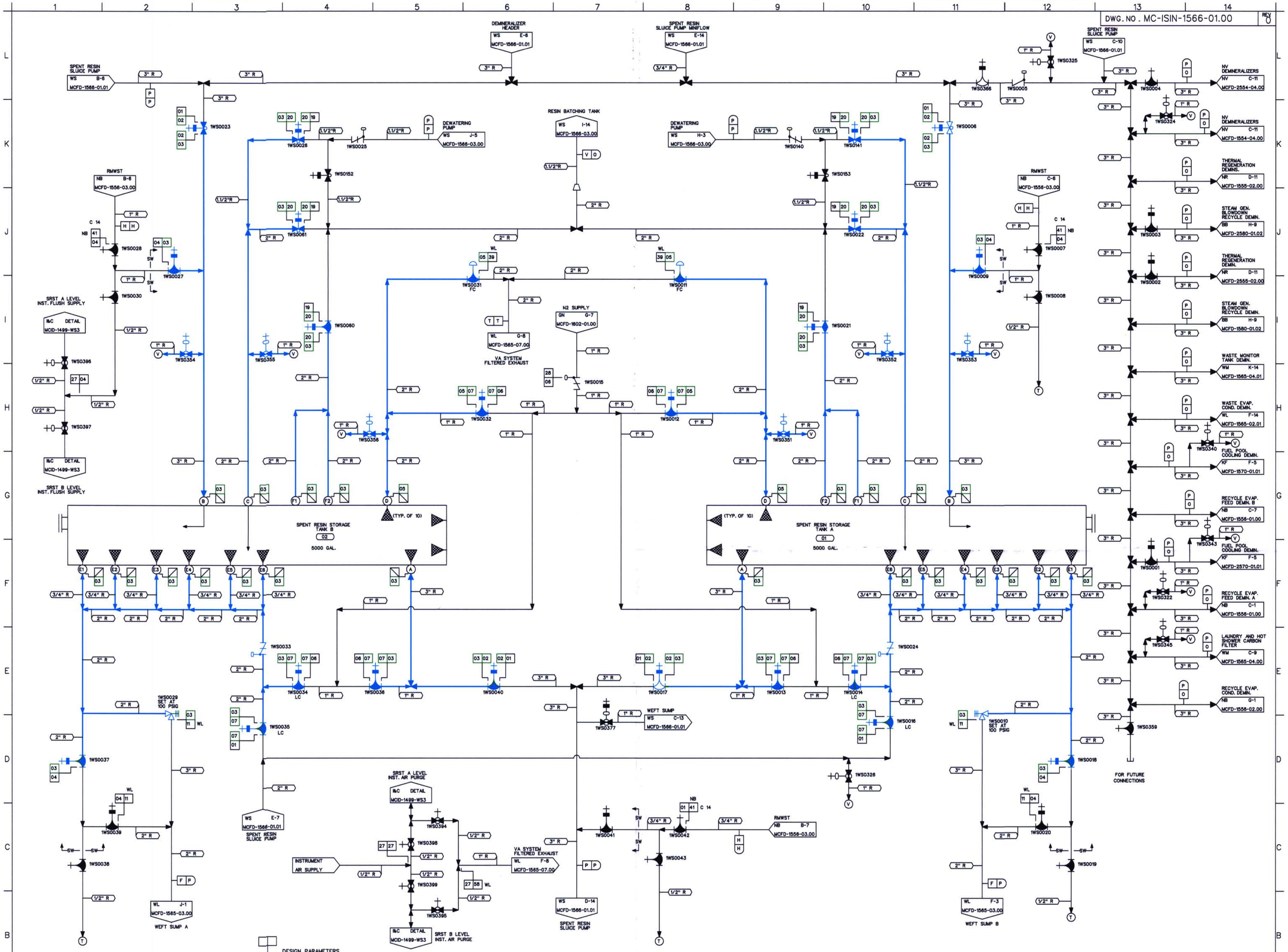

DESIGN PARAMETERS

LINE LISTING	PIPE SPEC.	PRESSURE	TEMPERATURE	CLASS	MATERIAL
NB41	PS 151.4	30 PSIG	100 F	E	SS
WL11	PS 151.4	50 PSIG	200 F	E	SS
WL39	PS 151.4	15 PSIG	200 F	E	SS
WL58	TS 2701.1	150 PSIG	150 F	E	ST
WS01	PS 151.4	150 PSIG	150 F	E	SS
WS02	PS 151.3	150 PSIG	150 F	C	SS
WS03	PS 151.3	100 PSIG	150 F	C	SS
WS04	PS 151.4	100 PSIG	150 F	E	SS
WS05	PS 151.3	100 PSIG	150 F	C	SS
WS06	PS 151.4	150 PSIG	150 F	G	SS
WS07	PS 151.3	150 PSIG	150 F	C	SS
WS19	PS 151.4	150 PSIG	150 F	E	SS
WS20	PS 151.3	150 PSIG	150 F	C	SS
WS27	TS 2701.1	150 PSIG	150 F	E	ST
WS28	PS 151.4	150 PSIG	250 F	E	SS

NOTES:

1. PIPING SHOWN IN BLUE IN THE FOLLOWING LINE LISTINGS IS EXEMPT DUE TO NOT BEING CONSIDERED A PART OF D-A CATEGORY PER ENG. NOTE DATED 5/22/00: WS02, WS03, WS05, WS07, WS20.

LEGEND

- ISI CLASS 1
- ISI CLASS 2
- ISI CLASS 3
- ISI EXEMPT
- NON-ISI

THIS DRAWING IS FOR INSERVICE INSPECTION ONLY AND SHALL NOT BE USED FOR OTHER PURPOSES SUCH AS MAINTENANCE, MODIFICATION, OR REPAIRS. THIS DRAWING SHALL BE REVISED WHEN AS-BUILT CHANGES AFFECT THE INSERVICE INSPECTION BOUNDARIES AND DETAILS OF THE COMPONENTS/SYSTEMS SHOWN.

NO.	REVISIONS	DRN	DATE	CHKD	DATE	APPR	DATE
ORIG	RELEASED FOR ISI USE ONLY	TDM	11-7-00	GDS	11-13-00	RKR	12-14-00

W A I V E D — CIVIL ELEC. MECH — INSPECTED

QA CONDITION 1 AND 2

DUKE POWER COMPANY
MCGUIRE NUCLEAR STATION UNIT 1 AND 2

ASME SECTION XI
INSERVICE INSPECTION NDE BOUNDARY OF
NUCLEAR SOLID WASTE
DISPOSAL SYSTEM (WS)

DESIGNER	TIM MYERS	DATE 11-7-00	INSP	WAIVED	DATE
DRAWN	TIM MYERS	DATE 11-7-00	INSP	WAIVED	DATE
CHECKED	GARY D SCARBORO	DATE 11-7-00	APPR	R. KEVIN RHYNE	DATE 12-14-00

SCALE — DWG .NO . MC-ISIN-1566-01.00 — REV 0

REFERENCE FLOW DIAGRAM
MCFD-1566-01.00 REV. 1
ERN:MC0099X5

D-38