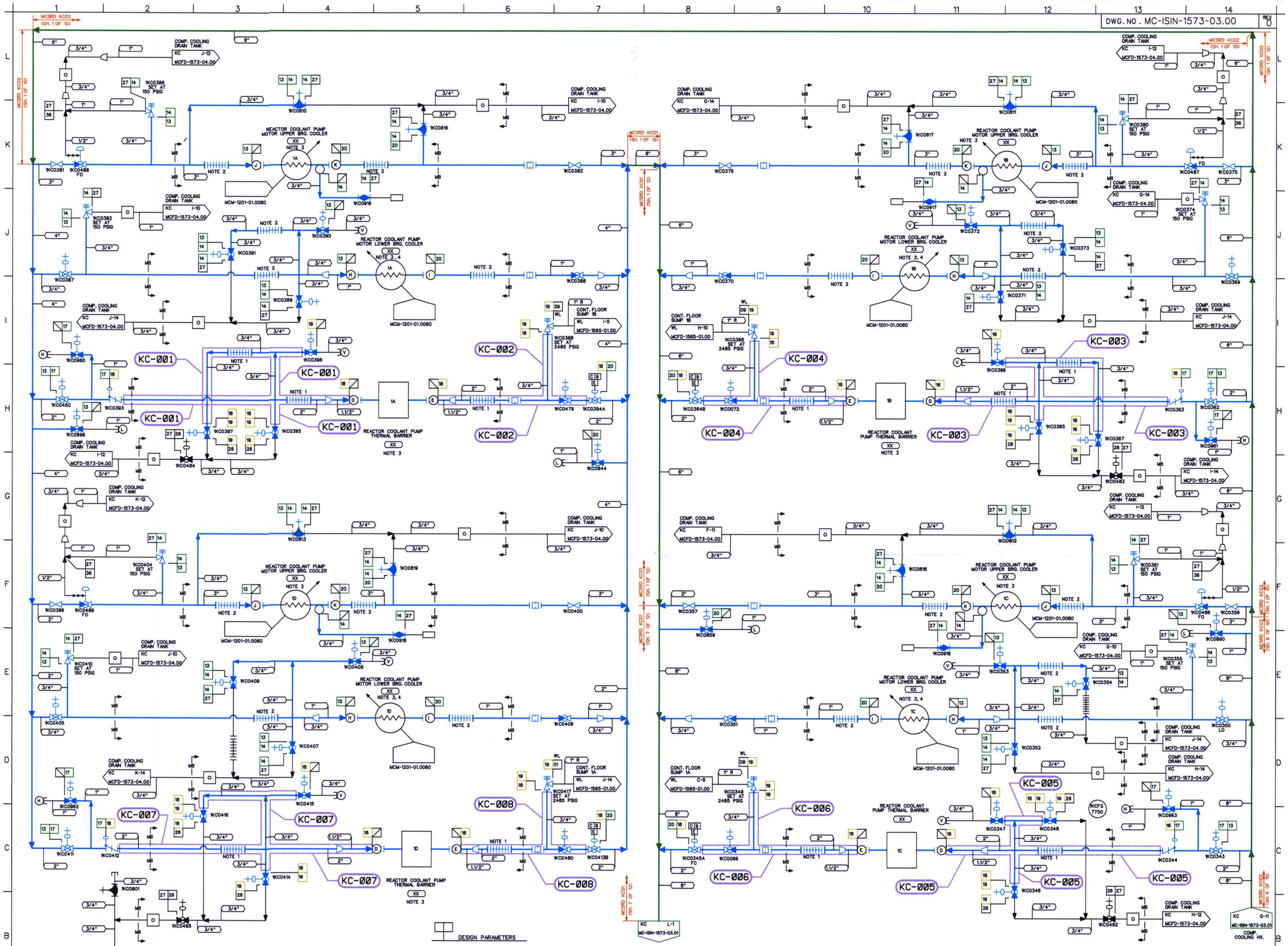

NOTE(S)

1. NON-CODE COMPONENT TO BE DESIGNED, MANUFACTURED, PROCURED AND INSTALLED ACCORDING TO RULES EQUIVALENT TO ASME SECT. III CLASS 2.
2. NON-CODE COMPONENT TO BE DESIGNED, MANUFACTURED, PROCURED AND INSTALLED ACCORDING TO RULES EQUIVALENT TO ASME SECT. III CLASS 3.
3. THIS COMPONENT WAS NOT BUILT TO ASME III. HOWEVER IT WAS BUILT TO THE APPLICABLE CODE AT THE TIME OF PURCHASE PER WESTINGHOUSE SPECIFICATION.
4. THE RCP MOTOR LOWER BEARING COOLER AND ASSOCIATED VENDOR PIPING IS CLASSIFIED NON-SAFETY RELATED AND NON-PRESSURE BOUNDARY PER MGMM-8424.
5. PIPING SHOWN IN BLUE IN THE FOLLOWING LINE LISTINGS SHALL BE EXEMPT PER IWC-1222(a)1 KC18, KC19.
6. PIPING SHOWN IN BLUE IN THE FOLLOWING LINE LISTINGS SHALL BE EXEMPT PER IWD-1220(a)(1): KC13, KC14, KC17, KC20.
7. WELD ISO & MATH MODEL DRAWING REFERENCES ARE APPROXIMATE AND ARE FOR INFORMATION ONLY.

DESIGN PARAMETERS

LINE LISTING	PIPE SPEC.	PRESSURE	TEMPERATURE	CLASS	MATERIAL
KC13	PS 150.3	150 PSIG	120 F	C	CS
KC14	PS 151.3	150 PSIG	170 F	C	SS
KC17	PS 2500.3	2485 PSIG	650 F	C	CS
KC18	PS 2500.2	2485 PSIG	650 F	B	CS
KC19	PS 2501.2	2485 PSIG	650 F	B	SS
KC20	PS 150.3	150 PSIG	169 F	C	CS
KC26	PS 2501.4	2485 PSIG	650 F	G	SS
KC27	PS 151.4	150 PSIG	170 F	G	SS
KC36	TS 2701.1	150 PSIG	170 F	G	ST
WL01	PS 151.4	100 PSIG	200 F	E	SS
WL09	PS 151.4	50 PSIG	200 F	E	SS

LEGEND

- ISI CLASS 1
- ISI CLASS 2
- ISI CLASS 3
- ISI EXEMPT
- NON-ISI

THIS DRAWING IS FOR INSERVICE INSPECTION ONLY AND SHALL NOT BE USED FOR OTHER PURPOSES SUCH AS MAINTENANCE, MODIFICATION, OR REPAIRS. THIS DRAWING SHALL BE REVISED WHEN AS-BUILT CHANGES AFFECT THE INSERVICE INSPECTION BOUNDARIES AND DETAILS OF THE COMPONENTS/SYSTEMS SHOWN.

NO.	REVISIONS	DRN	DATE	CHKD	DATE	APPR	DATE
ORIG	RELEASED FOR ISI USE ONLY	TDM	11-7-00	PTF	11-8-00	RKR	12-14-00

WAIVED — CIVIL, ELEC., MECH — INSPECTED

QA CONDITION 1

DUKE POWER COMPANY
MCGUIRE NUCLEAR STATION UNIT 1

ASME SECTION XI
INSERVICE INSPECTION NDE BOUNDARY OF COMPONENT COOLING SYSTEM
(KC)

DESIGNER TIM MYERS DATE 11-7-00 INSP. WAIVED DATE —
DRAWN TIM MYERS DATE 11-7-00 INSP. WAIVED DATE —
CHECKED GARY D SCARBORO DATE 11-7-00 APPR. R. KEVIN RHYNE DATE 12-14-00
SCALE

DWG. NO. MC-ISIN-1573-03.00 REV 0

REFERENCE FLOW DIAGRAM
MCFD-1573-03.00 REV. 5
ERN: MC0099Y9

D-52