DWG. NO. MC-ISIN-1565-02.01 REV 0

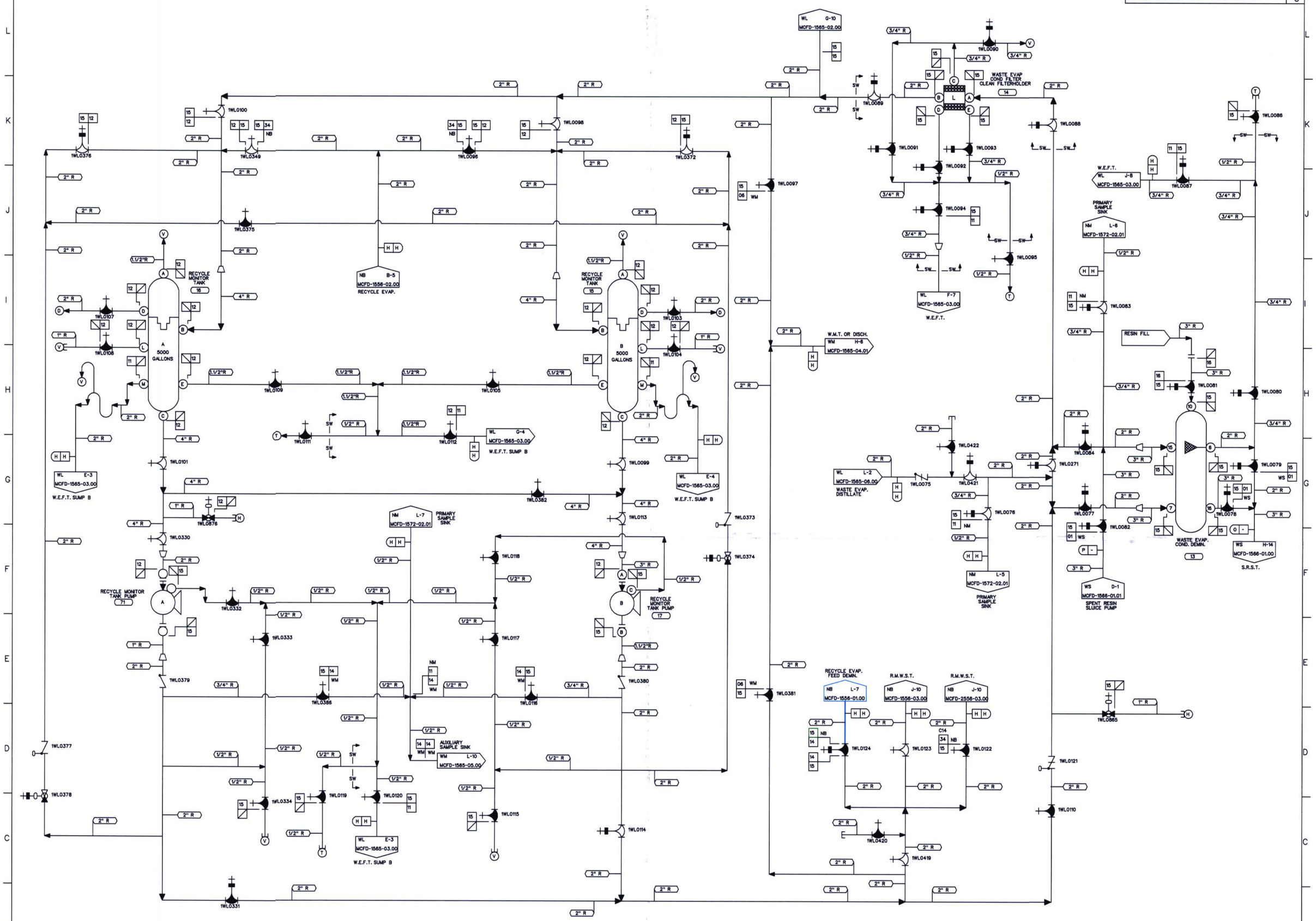

NOTES:

1. PIPING SHOWN IN BLUE IN THE FOLLOWING LINE LISTINGS IS EXEMPT DUE TO NOT BEING CONSIDERED A PART OF D-A CATEGORY PER ENG. NOTE DATED 5/22/00: NB15.

DESIGN PARAMETERS

LINE LISTING	PIPE SPEC.	PRESSURE	TEMPERATURE	CLASS	MATERIAL
NB15	PS 151.3	150 PSIG	200 F	C	SS
NB34	PS 151.4	150 PSIG	200 F	E	SS
NM11	TS 2701.1	150 PSIG	200 F	E	ST
WL11	PS 151.4	50 PSIG	200 F	E	SS
WL12	PS 151.4	15 PSIG	200 F	E	SS
WL14	PS 151.4	150 PSIG	200 F	E	SS
WL15	PS 151.4	150 PSIG	200 F	E	SS
WL16	PS 151.4	150 PSIG	200 F	H	SS
WM06	PS 151.4	150 PSIG	200 F	E	SS
WM14	TS 2701.1	150 PSIG	200 F	E	ST
WS01	PS 151.4	150 PSIG	150 F	E	SS

LEGEND

- ISI CLASS 1
- ISI CLASS 2
- ISI CLASS 3
- ISI EXEMPT
- NON-ISI

THIS DRAWING IS FOR INSERVICE INSPECTION ONLY AND SHALL NOT BE USED FOR OTHER PURPOSES SUCH AS MAINTENANCE, MODIFICATION, OR REPAIRS. THIS DRAWING SHALL BE REVISED WHEN AS-BUILT CHANGES AFFECT THE INSERVICE INSPECTION BOUNDARIES AND DETAILS OF THE COMPONENTS/SYSTEMS SHOWN.

NO.	REVISIONS	DRN	DATE	CHKD	DATE	APPR	DATE
ORIG	RELEASED FOR ISI USE ONLY	TDM	11-7-00	GDS	11-13-00	RKR	12-14-00

W A I V E D INSPECTED: CIVIL, ELEC., MECH.

QA CONDITION 1 AND 2

DUKE POWER COMPANY
MCGUIRE NUCLEAR STATION UNIT 1 AND 2

ASME SECTION XI
INSERVICE INSPECTION NDE BOUNDARY OF
LIQUID WASTE RECYCLE
SYSTEM (WL)

DESIGNER	TIM MYERS	DATE 11-7-00	INSP.	WAIVED	DATE —
DRAWN	TIM MYERS	DATE 11-7-00	INSP.	WAIVED	DATE —
CHECKED	GARY D SCARBORO	DATE 11-7-00	APPR.	R. KEVIN RHYNE	DATE 12-14-00

SCALE — DWG. NO. MC-ISIN-1565-02.01 REV 0

REFERENCE FLOW DIAGRAM
MCFD-1565-02.01 REV. 0
ERN:MC0099X3

D-36