DWG. NO. MC-ISIN-1592-01.00 REV 0

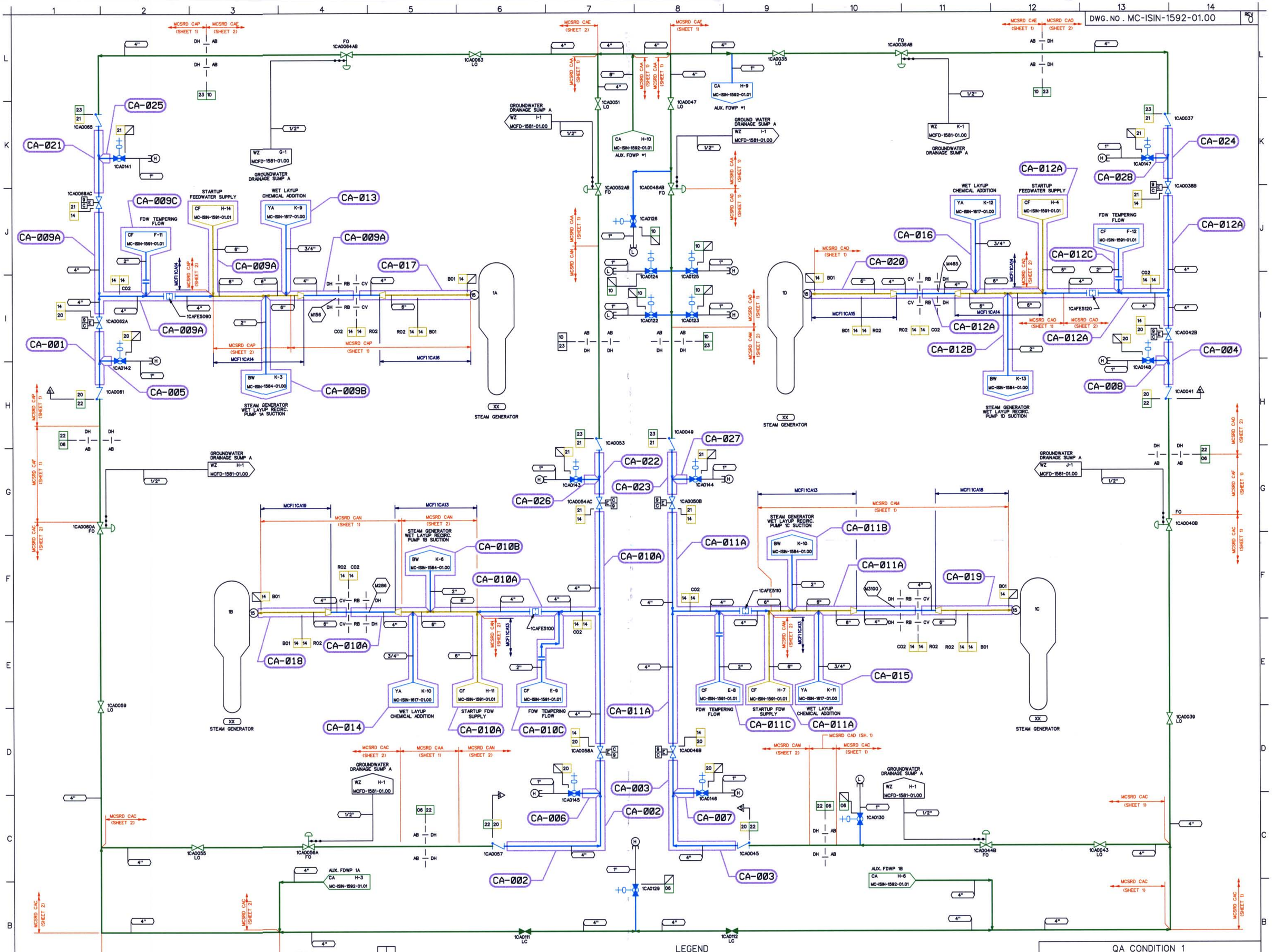

NOTE(S)

1. PIPING SHOWN IN BLUE IN THE FOLLOWING LINE LISTINGS SHALL BE EXEMPT PER IWC-1222(a): CA14, CA20, CA21.
2. PIPING SHOWN IN BLUE IN THE FOLLOWING LINE LISTINGS SHALL BE EXEMPT PER IWD-1220(b)(1): CA06, CA10, CA22, CA23.
3. WELD ISO & MATH MODEL DRAWING REFERENCES ARE APPROXIMATE AND ARE FOR INFORMATION ONLY.

DESIGN PARAMETERS

LINE LISTING	PIPE SPEC.	PRESSURE	TEMPERATURE	CLASS	MATERIAL
CA06	PS 900.3	1665 PSIG	160 F	C	CS
CA10	PS 900.3	1730 PSIG	160 F	C	CS
CA14	PS 900.2	1344 PSIG	567 F	B	CS
CA20	PS 900.2	1665 PSIG	567 F	B	CS
CA21	PS 1500.2	1730 PSIG	567 F	B	CS
CA22	PS 900.3	1665 PSIG	275 F	C	CS
CA23	PS 900.3	1730 PSIG	275 F	C	CS
WZ04	TS 2701.1	50 PSIG	160 F	G	ST

LEGEND

- ISI CLASS 1
- ISI CLASS 2
- ISI CLASS 3
- ISI EXEMPT
- NON-ISI

THIS DRAWING IS FOR INSERVICE INSPECTION ONLY AND SHALL NOT BE USED FOR OTHER PURPOSES SUCH AS MAINTENANCE, MODIFICATION, OR REPAIRS. THIS DRAWING SHALL BE REVISED WHEN AS-BUILT CHANGES AFFECT THE INSERVICE INSPECTION BOUNDARIES AND DETAILS OF THE COMPONENTS/SYSTEMS SHOWN.

NO.	REVISIONS	DRN	DATE	CHKD	DATE	APPR	DATE	CIVIL	ELEC.	MECH
ORIG	RELEASED FOR ISI USE ONLY	TDM	12-13-00	PTF	12-14-00	RKR	12-14-00	W	A	I V E D

INSPECTED

QA CONDITION 1

DUKE POWER COMPANY
MCGUIRE NUCLEAR STATION UNIT 1

ASME SECTION XI
INSERVICE INSPECTION NDE BOUNDARY OF AUXILIARY FEEDWATER SYSTEM
(CA)

DESIGNER	TIM MYERS	DATE	12-13-00	INSP.	WAIVED	DATE	—
DRAWN	TIM MYERS	DATE	12-13-00	INSP.	WAIVED	DATE	—
CHECKED	GARY D. SCARBORO	DATE	12-13-00	APPR.	R. KEVIN RHYNE	DATE	12-14-00

SCALE — DWG. NO. MC-ISIN-1592-01.00 REV 0

REFERENCE FLOW DIAGRAM
MCFD-1592-01.00 REV. 7
ERN:MC0099YO

D-73