DWG. NO. MC-ISIN-1573-01.00 REV. 0

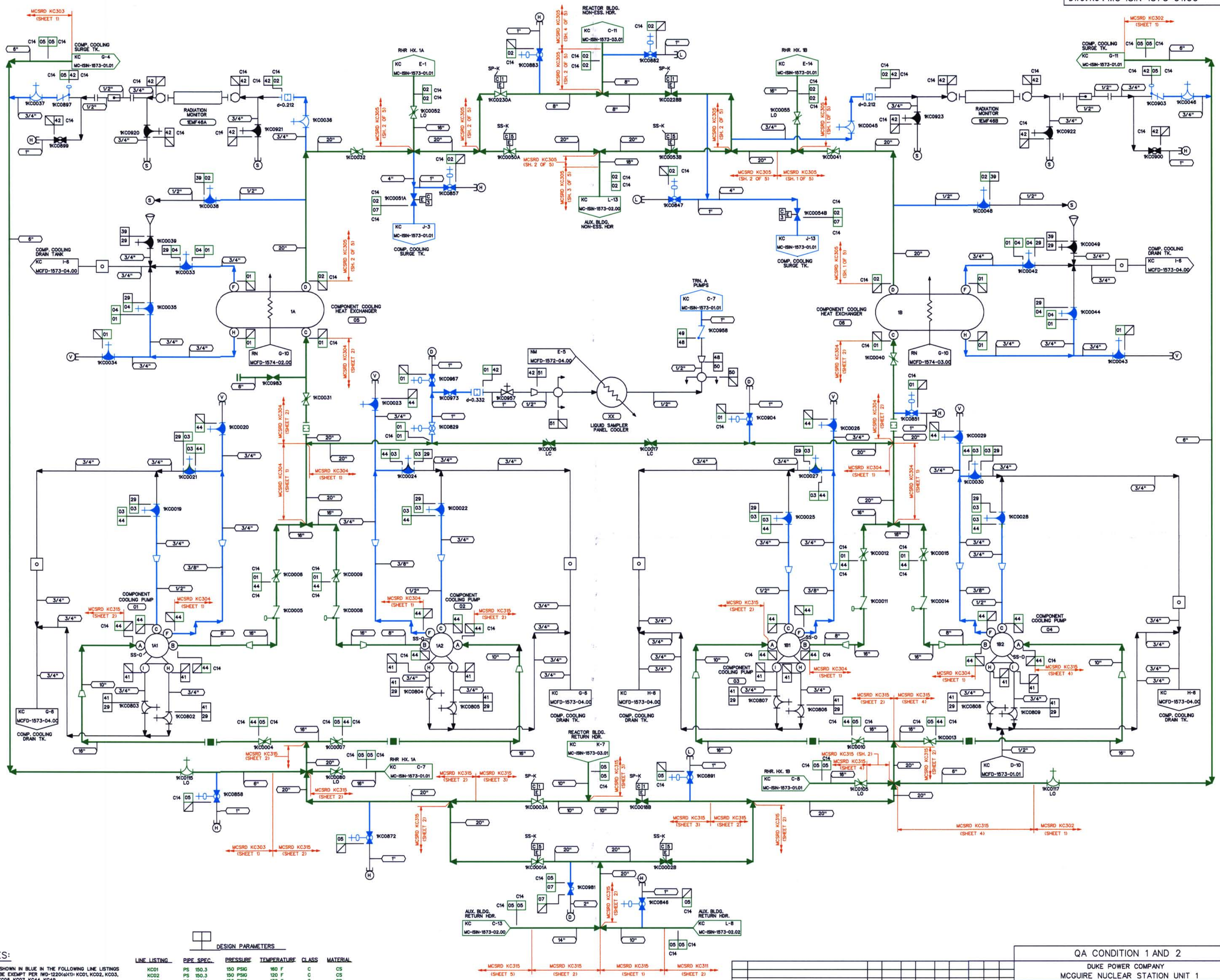

NOTES:

1. PIPING SHOWN IN BLUE IN THE FOLLOWING LINE LISTINGS SHALL BE EXEMPT PER IWD-1220(a)(1): KC01, KC02, KC03, KC04, KC05, KC07, KC44, KC49.
2. WELD ISO & MATH MODEL DRAWING REFERENCES ARE APPROXIMATE AND ARE FOR INFORMATION ONLY.

DESIGN PARAMETERS

LINE LISTING	PIPE SPEC.	PRESSURE	TEMPERATURE	CLASS	MATERIAL
KC01	PS 150.3	150 PSIG	160 F	C	CS
KC02	PS 150.3	150 PSIG	120 F	C	CS
KC03	PS 151.3	150 PSIG	170 F	C	SS
KC04	PS 151.3	150 PSIG	170 F	C	SS
KC05	PS 150.3	150 PSIG	160 F	C	CS
KC07	PS 151.3	150 PSIG	160 F	C	SS
KC29	PS 151.4	150 PSIG	170 F	G	SS
KC39	PS 151.4	150 PSIG	120 F	G	SS
KC41	PS 151.4	150 PSIG	170 F	G	SS
KC42	PS 150.4	150 PSIG	160 F	E	CS
KC44	PS 150.3	144 PSIG	160 F	C	CS
KC48	PS 150.4	150 PSIG	170 F	E	CS
KC49	PS 150.3	150 PSIG	170 F	C	CS
KC50	TS 2701.1	150 PSIG	170 F	E	ST
KC51	TS 2701.1	150 PSIG	160 F	E	ST

LEGEND

- ISI CLASS 1
- ISI CLASS 2
- ISI CLASS 3
- ISI EXEMPT
- NON-ISI

THIS DRAWING IS FOR INSERVICE INSPECTION ONLY AND SHALL NOT BE USED FOR OTHER PURPOSES SUCH AS MAINTENANCE, MODIFICATION, OR REPAIRS. THIS DRAWING SHALL BE REVISED WHEN AS-BUILT CHANGES AFFECT THE INSERVICE INSPECTION BOUNDARIES AND DETAILS OF THE COMPONENTS/SYSTEMS SHOWN.

NO.	REVISIONS	DRN	DATE	CHKD	DATE	APPR	DATE	CIVIL	ELEC.	MECH
ORIG	RELEASED FOR ISI USE ONLY	TDM	11-7-00	GDS	11-13-00	RKR	12-14-00	W A I V E D		

INSPECTED

QA CONDITION 1 AND 2

DUKE POWER COMPANY
MCGUIRE NUCLEAR STATION UNIT 1

ASME SECTION XI
INSERVICE INSPECTION NDE BOUNDARY OF COMPONENT COOLING SYSTEM (KC)

DESIGNER TIM MYERS DATE 11-7-00 INSP. WAIVED DATE
DRAWN TIM MYERS DATE 11-7-00 INSP. WAIVED DATE
CHECKED GARY D SCARBORO DATE 11-7-00 APPR. R. KEVIN RHYNE DATE 12-14-00
SCALE DWG. NO. MC-ISIN-1573-01.00 REV. 0

REFERENCE FLOW DIAGRAM
MCFD-1573-01.00 REV. 5
ERN:MC0099XJ

D-52