DWG. NO. MC-ISIN-1565-01.00 REV 0

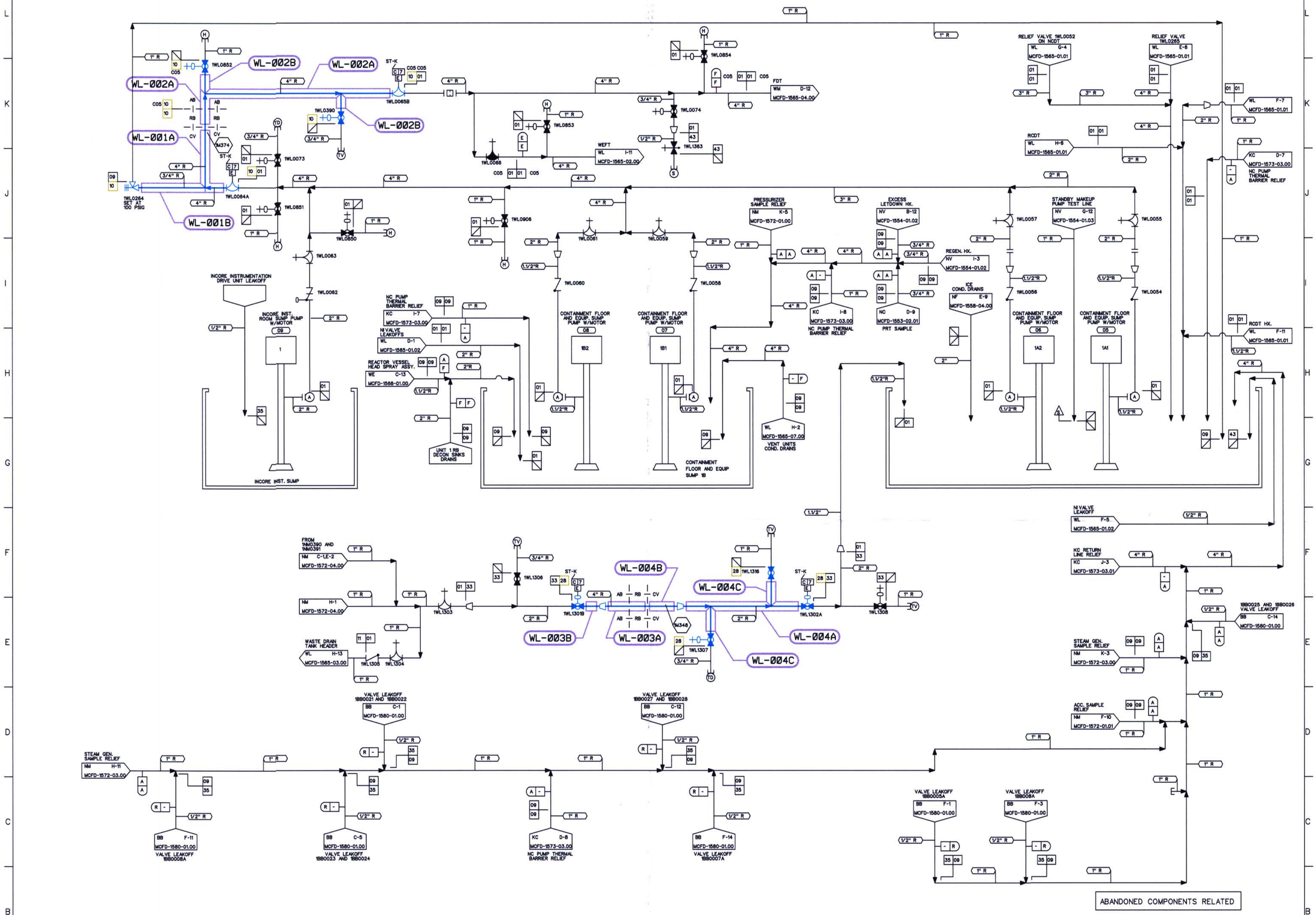

NOTES:

1. PIPING SHOWN IN BLUE IN THE FOLLOWING LINE LISTINGS IS EXEMPT PER IWC-1222(a): WL10, WL28.

DESIGN PARAMETERS

LINE LISTING	PIPE SPEC.	PRESSURE	TEMPERATURE	CLASS	MATERIAL
WL01	PS 151.4	100 PSIG	200 F	E	SS
WL09	PS 151.4	50 PSIG	200 F	E	SS
WL10	PS 151.2	100 PSIG	250 F	B	SS
WL11	PS 151.4	50 PSIG	200 F	E	SS
WL28	PS 2501.2	100 PSIG	250 F	B	SS
WL33	PS 2501.4	100 PSIG	200 F	E	ST
WL35	TS 2701.1	50 PSIG	200 F	E	ST
WL43	TS 2701.1	100 PSIG	200 F	E	ST

LEGEND

- ISI CLASS 1
- ISI CLASS 2
- ISI CLASS 3
- ISI EXEMPT
- NON-ISI

THIS DRAWING IS FOR INSERVICE INSPECTION ONLY AND SHALL NOT BE USED FOR OTHER PURPOSES SUCH AS MAINTENANCE, MODIFICATION, OR REPAIRS. THIS DRAWING SHALL BE REVISED WHEN AS-BUILT CHANGES AFFECT THE INSERVICE INSPECTION BOUNDARIES AND DETAILS OF THE COMPONENTS/SYSTEMS SHOWN.

NO.	REVISIONS	DRN	DATE	CHKD	DATE	APPR	DATE
ORIG	RELEASED FOR ISI USE ONLY	TDM	11-7-00	PTF	11-8-00	RKR	12-14-00

W A I V E D — CIVIL / ELEC. / MECH — INSPECTED

QA CONDITION 1, 2, AND 4

DUKE POWER COMPANY
MCGUIRE NUCLEAR STATION UNIT 1

ASME SECTION XI
INSERVICE INSPECTION NDE BOUNDARY OF
LIQUID WASTE RECYCLE SYSTEM
(WL)

DESIGNER	TIM MYERS	DATE 11-7-00	INSP	WAIVED	DATE —
DRAWN	TIM MYERS	DATE 11-7-00	INSP	WAIVED	DATE —
CHECKED	GARY D SCARBORO	DATE 11-7-00	APPR	R. KEVIN RHYNE	DATE 12-14-00

SCALE — DWG. NO. MC-ISIN-1565-01.00 REV 0

REFERENCE FLOW DIAGRAM MCFD-1565-01.00 REV. 5
ERN:MC0099X0

D-33