DWG. NO. MC-ISIN-1562-04.00 REV 0

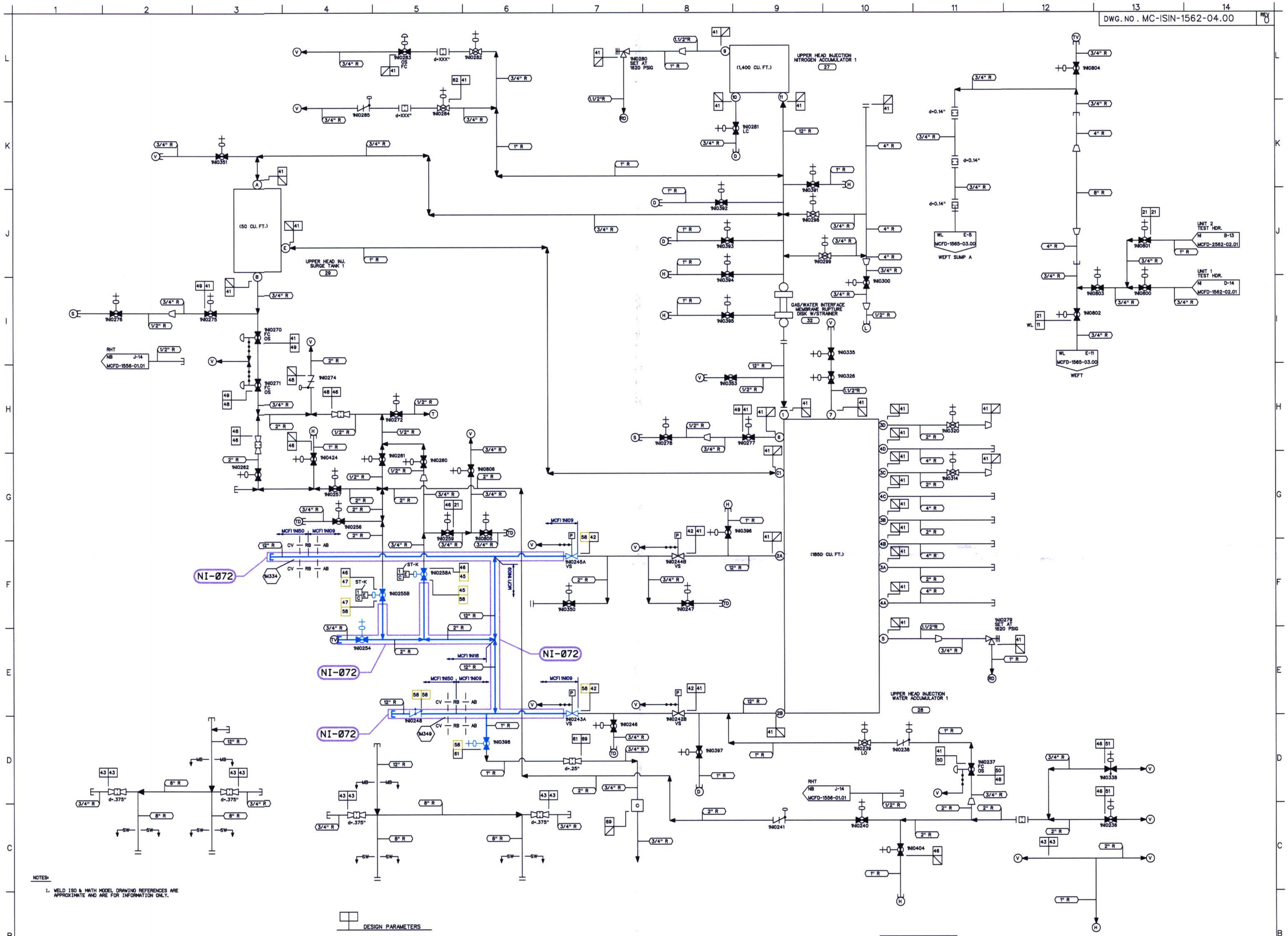

NOTES:

1. WELD ISO & MATH MODEL DRAWING REFERENCES ARE APPROXIMATE AND ARE FOR INFORMATION ONLY.

DESIGN PARAMETERS

LINE LISTING	PIPE SPEC.	PRESSURE	TEMPERATURE	CLASS	MATERIAL
NB52	TS 2701.1	50 PSIG	200 F	E	ST
N21	PS 2501.4	2485 PSIG	300 F	E	SS
N41	PS 1501.2	1620 PSIG	120 F	G	SS
N42	PS 2501.2	2485 PSIG	120 F	G	SS
N43	PS 2501.1	ATMOS	120 F	G	SS
N45	PS 2501.2	2735 PSIG	250 F	B	SS
N46	PS 2501.4	2735 PSIG	189 F	E	SS
N47	PS 2501.2	2735 PSIG	250 F	B	SS
N48	PS 151.4	150 PSIG	189 F	E	SS
N49	PS 1501.4	1620 PSIG	120 F	E	SS
N50	PS 2501.2	2735 PSIG	189 F	G	SS
N51	PS 2501.2	2735 PSIG	189 F	G	SS
N58	PS 2501.2	2485 PSIG	250 F	B	SS
N61	PS 1501.4	2485 PSIG	120 F	E	SS
N62	PS 1501.2	1800 PSIG	150 F	G	SS
N69	PS 151.4	50 PSIG	120 F	E	SS
WL11	PS 151.4	50 PSIG	200 F	E	SS

LEGEND

- ISI CLASS 1
- ISI CLASS 2
- ISI CLASS 3
- ISI EXEMPT
- NON-ISI

S-S-S
STANDBY SHUTDOWN SYSTEM

THIS DRAWING IS FOR INSERVICE INSPECTION ONLY AND SHALL NOT BE USED FOR OTHER PURPOSES SUCH AS MAINTENANCE, MODIFICATION, OR REPAIRS. THIS DRAWING SHALL BE REVISED WHEN AS-BUILT CHANGES AFFECT THE INSERVICE INSPECTION BOUNDARIES AND DETAILS OF THE COMPONENTS/SYSTEMS SHOWN.

NO.	REVISIONS	DRN	DATE	CHKD	DATE	APPR	DATE
ORIG	RELEASED FOR ISI USE ONLY	TDM	11-7-00	PTF	11-8-00	RKR	12-14-00

WAIVED — CIVIL, ELEC, MECH — INSPECTED

QA CONDITION 1, 2, AND 4

DUKE POWER COMPANY
MCGUIRE NUCLEAR STATION UNIT 1

ASME SECTION XI
INSERVICE INSPECTION NDE BOUNDARY OF SAFETY INJECTION SYSTEM (NI)
(UPPER HEAD)

DESIGNER	TIM MYERS	DATE 11-7-00	INSP.	WAIVED	DATE —
DRAWN	TIM MYERS	DATE 11-7-00	INSP.	WAIVED	DATE —
CHECKED	GARY D SCARBORO	DATE 11-7-00	APPR.	R. KEVIN RHYNE	DATE 12-14-00

SCALE — DWG. NO. MC-ISIN-1562-04.00 — REV 0

REFERENCE FLOW DIAGRAM MCFD-1562-04.00 REV. 1
ERN:MC0099WY

D-30