DWG. NO. MC-ISIN-1572-01.01 REV 0

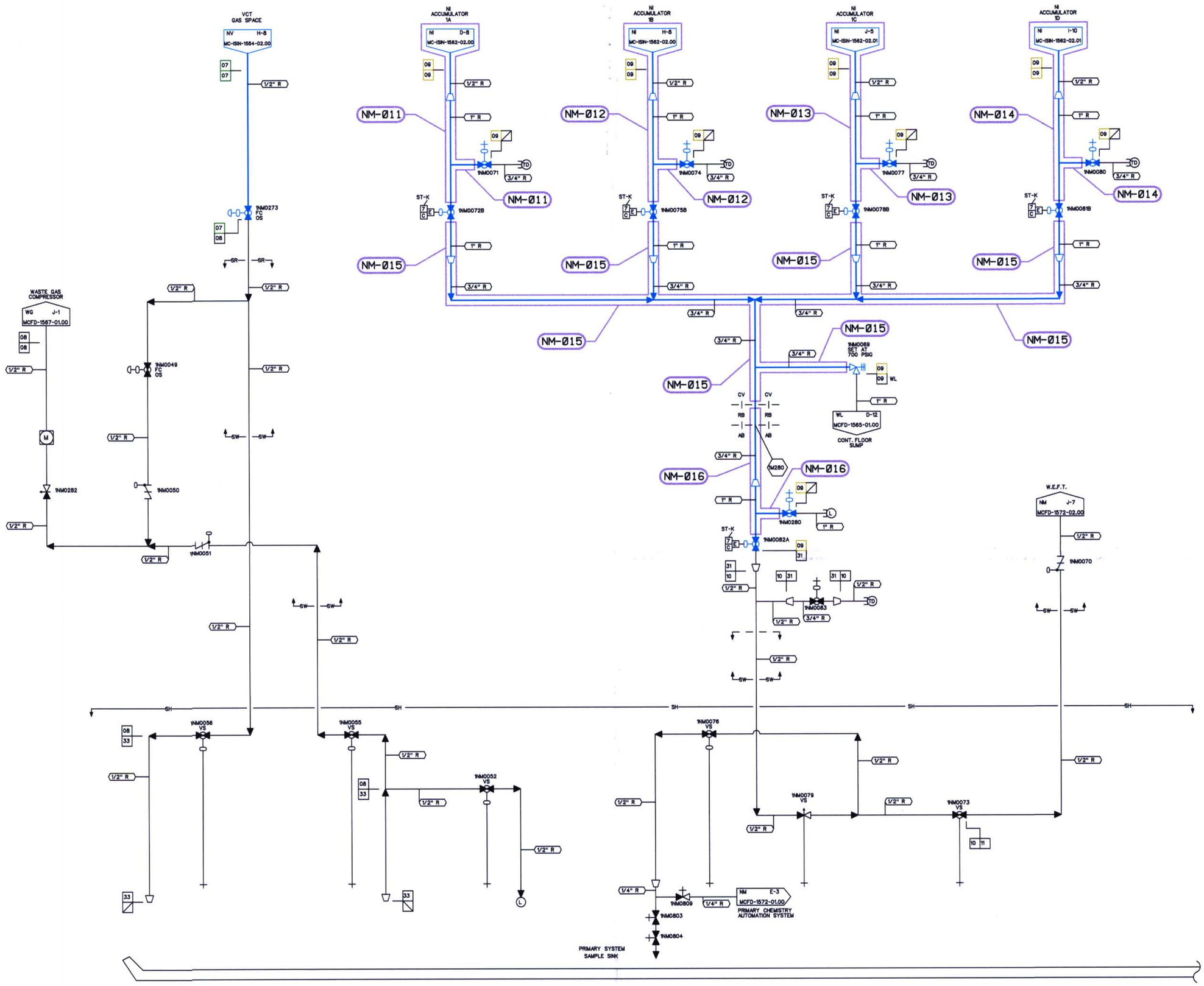

NOTES:

1. PIPING SHOWN IN BLUE IN THE FOLLOWING LINE LISTINGS IS EXEMPT DUE TO NOT BEING CONSIDERED A PART OF D-A CATEGORY 1NM07.
2. PIPING SHOWN IN BLUE IN THE FOLLOWING LINE LISTINGS IS EXEMPT PER IWC-1222(a) NM08.

DESIGN PARAMETERS

LINE LISTING	PIPE SPEC.	PRESSURE	TEMPERATURE	CLASS	MATERIAL
NM07	TS 2701.1	100 PSIG	200 F	C	ST
NM08	TS 2701.1	100 PSIG	200 F	E	ST
NM09	PS 601.2	700 PSIG	300 F	B	SS
NM10	TS 2701.1	700 PSIG	300 F	E	ST
NM11	TS 2701.1	150 PSIG	200 F	E	ST
NM31	PS 601.4	700 PSIG	300 F	E	SS
NM33	PS 151.4	100 PSIG	200 F	E	SS
WL09	PS 151.4	50 PSIG	200 F	E	SS

LEGEND

- ISI CLASS 1
- ISI CLASS 2
- ISI CLASS 3
- ISI EXEMPT
- NON-ISI

THIS DRAWING IS FOR INSERVICE INSPECTION ONLY AND SHALL NOT BE USED FOR OTHER PURPOSES SUCH AS MAINTENANCE, MODIFICATION, OR REPAIRS. THIS DRAWING SHALL BE REVISED WHEN AS-BUILT CHANGES AFFECT THE INSERVICE INSPECTION BOUNDARIES AND DETAILS OF THE COMPONENTS/SYSTEMS SHOWN.

NO.	REVISIONS	DRN	DATE	CHKD	DATE	APPR	DATE
ORIG	RELEASED FOR ISI USE ONLY	TDM	11-7-00	PTF	11-8-00	RKR	12-14-00

W A I V E D — CIVIL ELEC. MECH. — INSPECTED

QA CONDITION 1 AND 2

DUKE POWER COMPANY
MCGUIRE NUCLEAR STATION UNIT 1 AND 2

ASME SECTION XI
INSERVICE INSPECTION NDE BOUNDARY OF NUCLEAR SAMPLING SYSTEM
(NM)

DESIGNER TIM MYERS DATE 11-7-00 INSP. WAIVED DATE —
DRAWN TIM MYERS DATE 11-7-00 INSP. WAIVED DATE —
CHECKED GARY D SCARBORO DATE 11-7-00 APPR. R. KEVIN RHYNE DATE 12-14-00
SCALE DWG. NO. MC-ISIN-1572-01.01 REV 0

REFERENCE FLOW DIAGRAM MCFD-1572-01.01 REV. 4
ERN: MC0099XG

D-49