DWG. NO. MC-ISIN-1572-01.00 REV 0

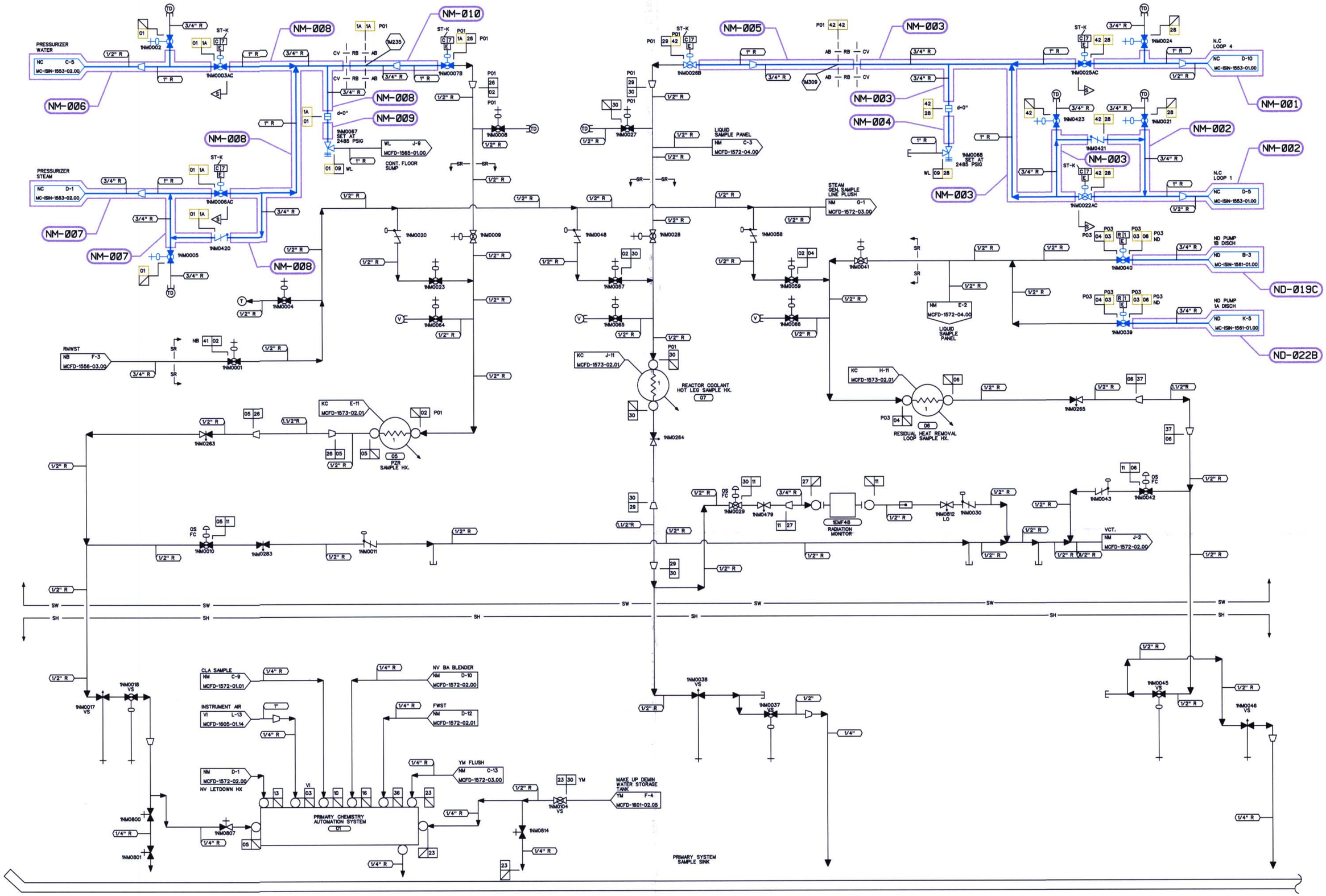

DESIGN PARAMETERS

LINE LISTING	PIPE SPEC.	PRESSURE	TEMPERATURE	CLASS	MATERIAL
NB41	PS 151.4	30 PSIG	100 F	E	SS
ND06	PS 601.2	600 PSIG	350 F	B	SS
NM01	PS 2501.2	2485 PSIG	670 F	B	SS
NM02	TS 2701.1	2485 PSIG	670 F	E	ST
NM03	PS 601.2	600 PSIG	350 F	B	SS
NM04	TS 2701.1	600 PSIG	350 F	E	ST
NM05	TS 2701.1	2485 PSIG	670 F	E	ST
NM06	TS 2701.1	600 PSIG	350 F	E	ST
NM10	TS 2701.1	700 PSIG	300 F	E	ST
NM11	TS 2701.1	150 PSIG	200 F	E	ST
NM13	TS 2701.1	255 PSIG	150 F	E	ST
NM16	TS 2701.1	150 PSIG	175 F	E	ST
NM1A	PS 2501.2	2485 PSIG	670 F	B	SS
		2685 PSIG	250 F		
NM23	TS 2701.1	150 PSIG	120 F	G	ST
NM26	PS 2501.4	2485 PSIG	670 F	E	SS
NM27	PS 151.4	150 PSIG	200 F	E	SS
NM28	PS 2501.2	2485 PSIG	650 F	B	SS
NM29	PS 2501.4	2485 PSIG	650 F	E	SS
NM30	TS 2701.1	2485 PSIG	650 F	E	ST
NM36	TS 2701.1	150 PSIG	114 F	E	ST
NM37	PS 601.4	600 PSIG	350 F	E	SS

LINE LISTING	PIPE SPEC.	PRESSURE	TEMPERATURE	CLASS	MATERIAL
NM42	PS 2501.2	2485 PSIG	650 F	B	SS
		2685 PSIG	250 F		
VI03	PS 154.1	115 PSIG	105 F	G	GS
WL09	PS 151.4	50 PSIG	200 F	E	SS

NOTES:

1. PIPING SHOWN IN BLUE IN THE FOLLOWING LINE LISTINGS SHALL BE EXEMPT PER IWC-1222(a): ND06, NM01, NM03, NM1A, NM28, NM42.

REFERENCE FLOW DIAGRAM
MCFD-1572-01.00 REV. 5
ERN:MC0099XF

LEGEND

- ISI CLASS 1
- ISI CLASS 2
- ISI CLASS 3
- ISI EXEMPT
- NON-ISI

S-S-S
STANDBY SHUTDOWN SYSTEM

THIS DRAWING IS FOR INSERVICE INSPECTION ONLY AND SHALL NOT BE USED FOR OTHER PURPOSES SUCH AS MAINTENANCE, MODIFICATION, OR REPAIRS. THIS DRAWING SHALL BE REVISED WHEN AS-BUILT CHANGES AFFECT THE INSERVICE INSPECTION BOUNDARIES AND DETAILS OF THE COMPONENTS/SYSTEMS SHOWN.

NO.	REVISIONS	DRN	DATE	CHKD	DATE	APPR	DATE
ORIG	RELEASED FOR ISI USE ONLY	TDM	11-7-00	PTF	11-8-00	RKR	12-14-00

WAIVED
CIVIL ELEC. MECH.
INSPECTED

QA CONDITION 1 AND 2

DUKE POWER COMPANY
MCGUIRE NUCLEAR STATION UNIT 1

ASME SECTION XI
INSERVICE INSPECTION NDE BOUNDARY OF NUCLEAR SAMPLING SYSTEM
(NM)

DESIGNER TIM MYERS DATE 11-7-00 INSP. WAIVED DATE —
DRAWN TIM MYERS DATE 11-7-00 INSP. WAIVED DATE —
CHECKED GARY D SCARBORO DATE 11-7-00 APPR. R. KEVIN RHYNE DATE 12-14-00
SCALE DWG. NO. MC-ISIN-1572-01.00 REV 0

D-48