DWG. NO. MC-ISIN-1570-01.01 REV. 0

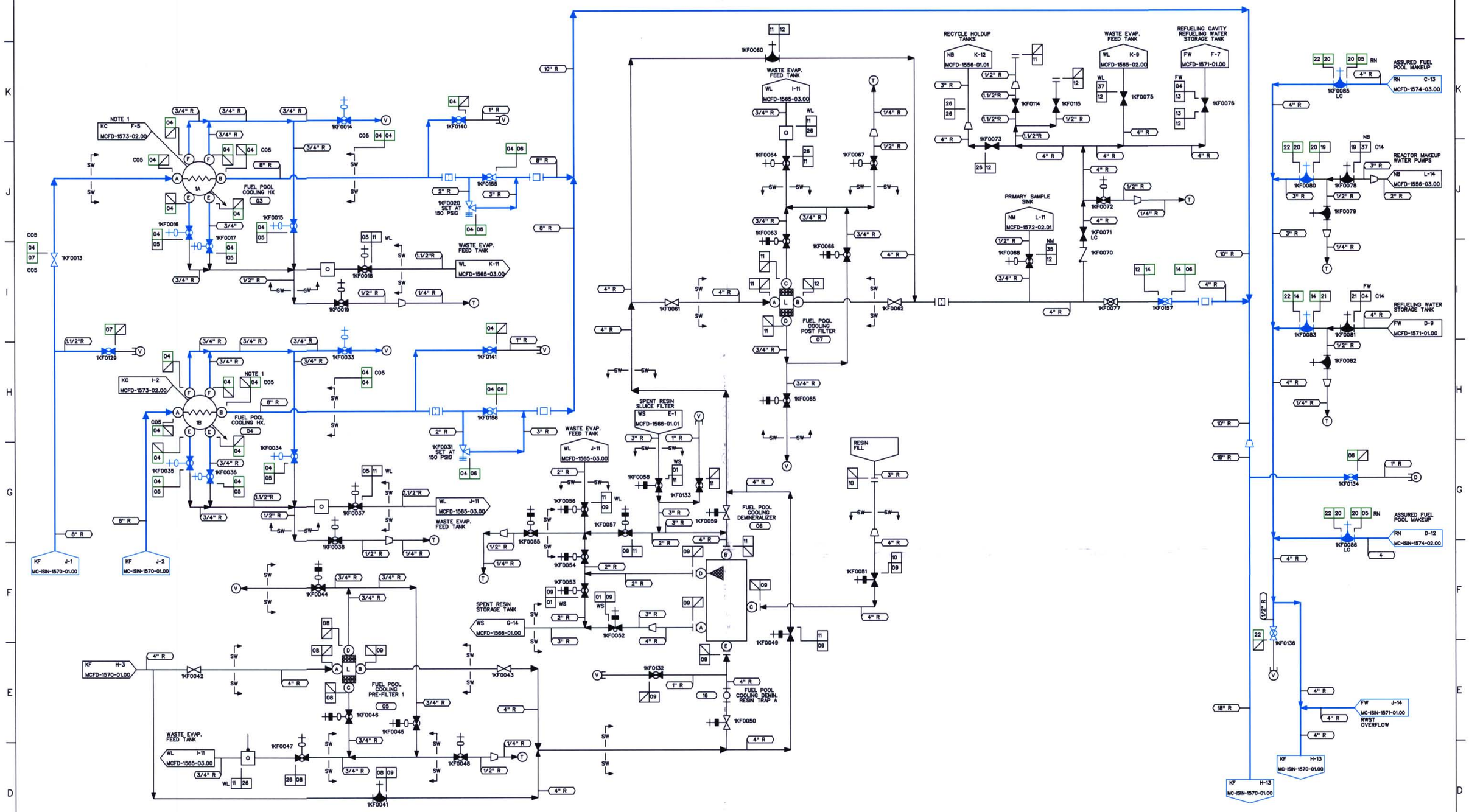

NOTE(S)

1. THIS COMPARTMENT WAS NOT BUILT TO ASME III. HOWEVER, IT WAS BUILT TO THE APPLICABLE CODE AT THE TIME OF PURCHASE PER McGUIRE PSAR TABLE 1A.4-2.
2. PIPING SHOWN IN BLUE IN THE FOLLOWING LINE LISTINGS IS EXEMPT PER IWD-1220(a)(1) AND/OR (c): KF04, KF08, KF07, KF14, KF20, KF22. THESE EXEMPTIONS ARE BASED ON INFORMATION FROM SECOND INTERVAL AND NEED CLARIFICATION FROM ENGINEERING.

DESIGN PARAMETERS

LINE LISTING	PIPE SPEC.	PRESSURE	TEMPERATURE	CLASS	MATERIAL
FW04	PS 151.4	175 PSIG	200 F	E	SS
KF04	PS 151.3	150 PSIG	200 F	C	SS
KF05	PS 151.4	150 PSIG	200 F	E	SS
KF06	PS 151.3	25 PSIG	200 F	C	SS
KF07	PS 151.3	175 PSIG	200 F	C	SS
KF08	PS 151.4	175 PSIG	150 F	E	SS
KF09	PS 151.4	175 PSIG	150 F	E	SS
KF10	PS 151.4	175 PSIG	150 F	G	SS
KF11	PS 151.4	175 PSIG	150 F	E	SS
KF12	PS 151.4	175 PSIG	150 F	E	SS
KF13	PS 151.4	175 PSIG	200 F	E	SS
KF14	PS 151.3	175 PSIG	200 F	C	SS
KF19	PS 151.4	150 PSIG	200 F	E	SS
KF20	PS 151.3	150 PSIG	200 F	C	SS
KF21	PS 151.4	175 PSIG	200 F	E	SS
KF22	PS 151.3	25 PSIG	200 F	C	SS
KF28	PS 151.4	50 PSIG	150 F	E	SS
NB37	PS 151.4	150 PSIG	100 F	E	SS
NM35	TS 2701.1	175 PSIG	150 F	E	ST
RN05	PS 151.3	135 PSIG	150 F	C	SS
WL11	PS 151.4	50 PSIG	200 F	E	SS
WL37	PS 151.4	20 PSIG	200 F	E	SS
WS01	PS 151.4	150 PSIG	150 F	E	SS

LEGEND

- ISI CLASS 1
- ISI CLASS 2
- ISI CLASS 3
- ISI EXEMPT
- NON-ISI

THIS DRAWING IS FOR INSERVICE INSPECTION ONLY AND SHALL NOT BE USED FOR OTHER PURPOSES SUCH AS MAINTENANCE, MODIFICATION, OR REPAIRS. THIS DRAWING SHALL BE REVISED WHEN AS-BUILT CHANGES AFFECT THE INSERVICE INSPECTION BOUNDARIES AND DETAILS OF THE COMPONENTS/SYSTEMS SHOWN.

NO.	REVISIONS	DRN	DATE	CHKD	DATE	APPR	DATE
ORIG	RELEASED FOR ISI USE ONLY	TDM	11-7-00	GDS	11-13-00	RKR	12-14-00

W A I V E D — CIVIL, ELEC., MECH. — INSPECTED

S-S-S
STANDBY SHUTDOWN SYSTEM

QA CONDITION 1 AND 2

DUKE POWER COMPANY
MCGUIRE NUCLEAR STATION UNIT 1

ASME SECTION XI
INSERVICE INSPECTION NDE BOUNDARY OF SPENT FUEL COOLING SYSTEM (KF)

DESIGNER	TIM MYERS	DATE 11-7-00	INSP	WAIVED	DATE —
DRAWN	TIM MYERS	DATE 11-7-00	INSP	WAIVED	DATE —
CHECKED	GARY D SCARBORO	DATE 11-7-00	APPR	R. KEVIN RHYNE	DATE 12-14-00

SCALE — DWG. NO. MC-ISIN-1570-01.01 — REV. 0

REFERENCE FLOW DIAGRAM
MCFD-1578-01.01 REV. 3
ERN: MC0099XD

D-46