DWG. NO. MC-ISIN-1562-01.00 REV 0

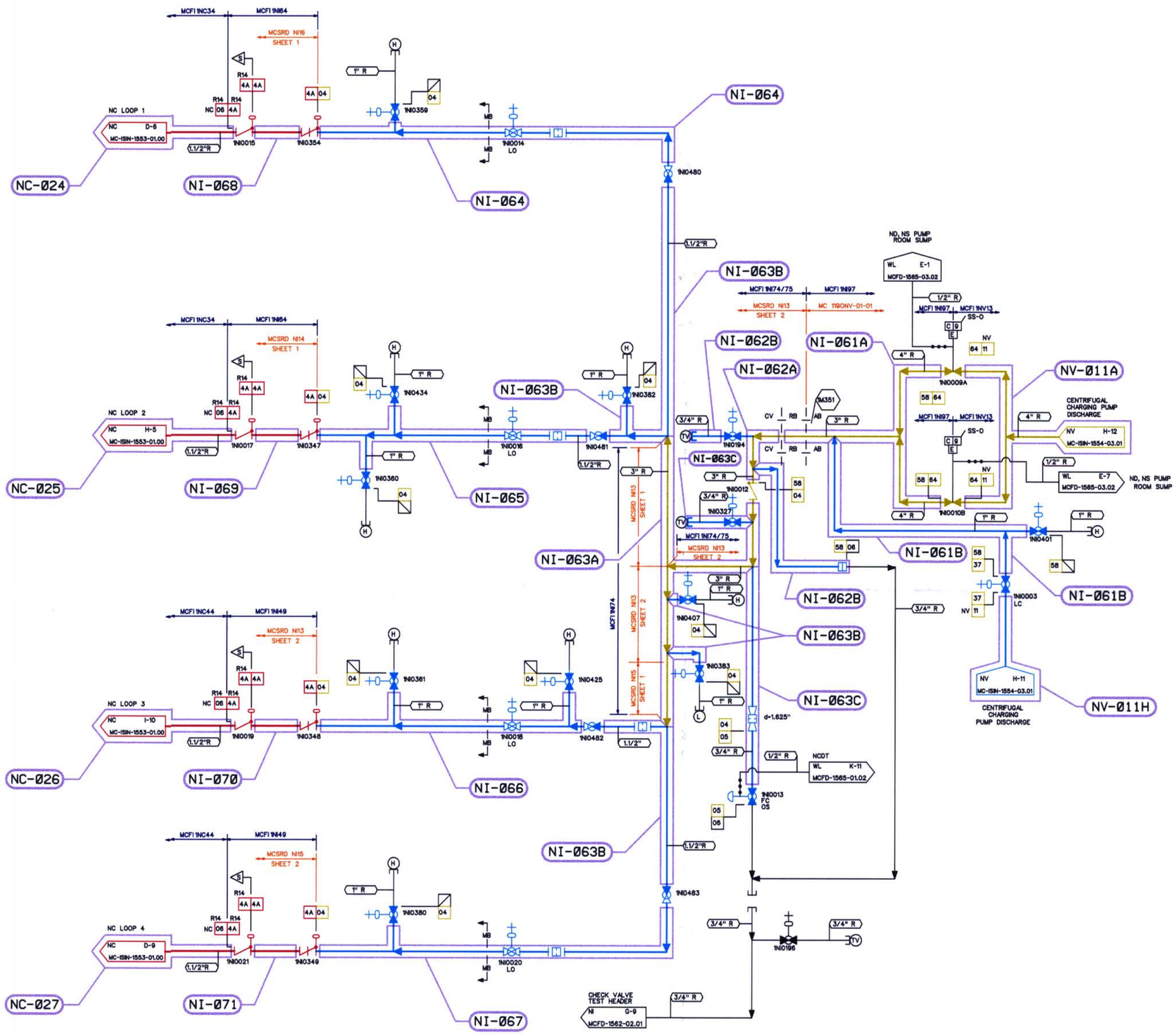

S-S-S
STANDBY SHUTDOWN SYSTEM

DESIGN PARAMETERS

LINE LISTING	PIPE SPEC.	PRESSURE	TEMPERATURE	CLASS	MATERIAL
NC06	PS 2501.1	2485 PSIG	650 F	A	SS
NI04	PS 2501.2	2485 PSIG	650 F	B	SS
NI05	PS 2501.2	2485 PSIG	650 F	B	SS
NI06	PS 2501.4	2485 PSIG	650 F	E	SS
NI37	PS 2501.2	2735 PSIG	250 F	B	SS
NI44	PS 2501.1	2485 PSIG	650 F	A	SS
NI58	PS 2501.2	2485 PSIG	250 F	B	SS
NI64	PS 2501.2	2735 PSIG	250 F	B	SS
NV11	PS 1501.2	2735 PSIG	189 F	B	SS
WL35	TS 2701.1	50 PSIG	200 F	E	ST
WL43	TS 2701.1	100 PSIG	200 F	E	ST

NOTES:

1. PIPING SHOWN IN BLUE IN THE FOLLOWING LINE LISTINGS SHALL BE EXEMPT PER IWC-1221(b)(1): NI04, NI05, NI37, NI58.
2. WELD ISO & MATH MODEL DRAWING REFERENCES ARE APPROXIMATE AND ARE FOR INFORMATION ONLY.

LEGEND

- ISI CLASS 1
- ISI CLASS 2
- ISI CLASS 3
- ISI EXEMPT
- NON-ISI

THIS DRAWING IS FOR INSERVICE INSPECTION ONLY AND SHALL NOT BE USED FOR OTHER PURPOSES SUCH AS MAINTENANCE, MODIFICATION, OR REPAIRS. THIS DRAWING SHALL BE REVISED WHEN AS-BUILT CHANGES AFFECT THE INSERVICE INSPECTION BOUNDARIES AND DETAILS OF THE COMPONENTS/SYSTEMS SHOWN.

NO.	REVISIONS	DRN	DATE	CHKD	DATE	APPR	DATE
ORIG	RELEASED FOR ISI USE ONLY	TDM	11-7-00	PTF	11-8-00	RKR	12-14-00

WAIVED — CIVIL, ELEC., MECH — INSPECTED

QA CONDITION 1 AND 2

DUKE POWER COMPANY
MCGUIRE NUCLEAR STATION UNIT 1

ASME SECTION XI
INSERVICE INSPECTION ND BOUNDARY OF
SAFETY INJECTION
SYSTEM (NI)

DESIGNER	TIM MYERS	DATE	11-7-00	INSP	WAIVED
DRAWN	TIM MYERS	DATE	11-7-00	INSP	WAIVED
CHECKED	GARY D SCARBORO	DATE	11-7-00	APPR	R. KEVIN RHYNE

DATE 12-14-00

SCALE — DWG. NO. MC-ISIN-1562-01.00 — REV 0

REFERENCE FLOW DIAGRAM
MCFD-1562-01.00 REV. 2
ERN: MC0099WT

D-25