DWG. NO. MC-ISIN-1558-04.00 REV 0

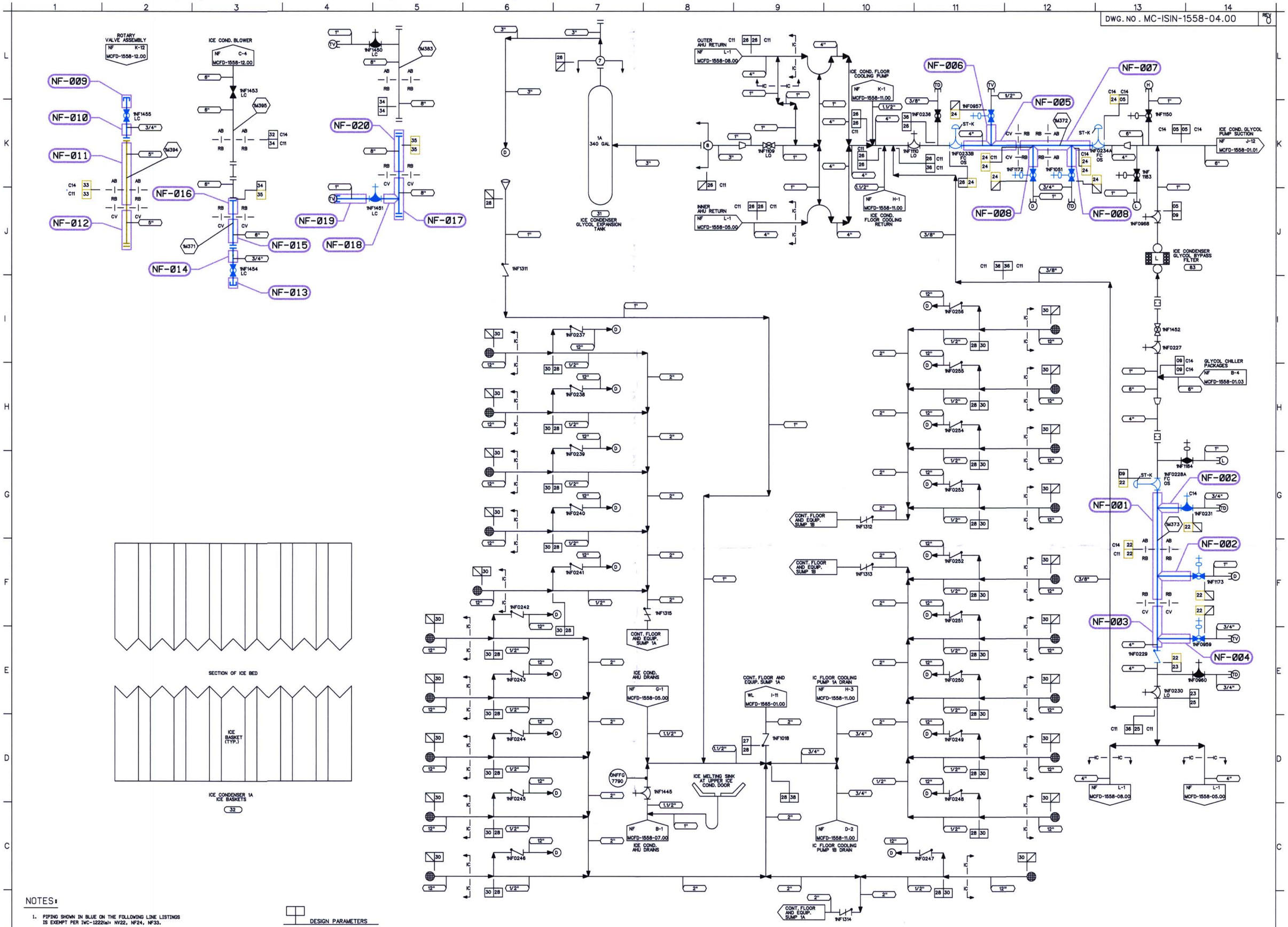

NOTES:

1. PIPING SHOWN IN BLUE ON THE FOLLOWING LINE LISTINGS IS EXEMPT PER IWC-1222(a): NV22, NF24, NF33.
2. PIPING SHOWN IN BLUE ON THE FOLLOWING LINE LISTINGS IS EXEMPT PER IWC-1222(a) AND/OR IWC-1222(c): NF35

DESIGN PARAMETERS

LINE LISTING	PIPE SPEC.	PRESSURE	TEMPERATURE	CLASS	MATERIAL
NF05	PS 150.4	150 PSIG	100 F	G	CS
NF09	PS 150.4	150 PSIG	100 F	G	CS
NF22	PS 150.2	150 PSIG	180 F	B	CS
NF23	PS 150.4	150 PSIG	100 F	G	CS
NF24	PS 150.2	150 PSIG	180 F	B	CS
NF25	PS 150.4	80 PSIG	100 F	G	CS
NF26	PS 150.4	80 PSIG	100 F	G	CS
NF27	PS 151.4	20 PSIG	AMB	E	SS
NF28	PS 151.4	20 PSIG	AMB	G	SS
NF30	PS 150.4	0 PSIG	100 F	G	CS
NF32	PS 150.4	10 PSIG	100 F	G	CS
NF33	PS 151.2	15 PSIG	250 F	B	SS
NF34	PS 151.4	10 PSIG	140 F	F	SS
NF35	PS 151.2	15 PSIG	180 F	B	SS
NF36	TS 2701.1	80 PSIG	100 F	G	ST
NF38	PS 150.4	20 PSIG	AMB	G	CS

LEGEND

- ISI CLASS 1
- ISI CLASS 2
- ISI CLASS 3
- ISI EXEMPT
- NON-ISI

THIS DRAWING IS FOR INSERVICE INSPECTION ONLY AND SHALL NOT BE USED FOR OTHER PURPOSES SUCH AS MAINTENANCE, MODIFICATION, OR REPAIRS. THIS DRAWING SHALL BE REVISED WHEN AS-BUILT CHANGES AFFECT THE INSERVICE INSPECTION BOUNDARIES AND DETAILS OF THE COMPONENTS/SYSTEMS SHOWN.

NO.	REVISIONS	DRN	DATE	CHKD	DATE	APPR	DATE
ORIG	RELEASED FOR ISI USE ONLY	TDM	11-7-00	PTF	11-8-00	RKR	12-14-00

WAIVED — CIVIL, ELEC., MECH — INSPECTED

QA CONDITION 1,2, AND 4

DUKE POWER COMPANY
MCGUIRE NUCLEAR STATION UNIT 1

ASME SECTION XI
INSERVICE INSPECTION NDE BOUNDARY OF
ICE CONDENSER REFRIGERATION
SYSTEM (NF)

DESIGNER	TIM MYERS	DATE	11-7-00	INSP	WAIVED	DATE	—
DRAWN	TIM MYERS	DATE	11-7-00	INSP	WAIVED	DATE	—
CHECKED	GARY D SCARBORO	DATE	11-7-00	APPR	R. KEVIN RHYNE	DATE	12-14-00

SCALE — DWG. NO. MC-ISIN-1558-04.00 — REV. 0

REFERENCE FLOW DIAGRAM
MCFD-1558-04.00 REV. 1
ERN:MC0099WR

D-23