DWG. NO. MC-ISIN-1574-02.00 REV 0

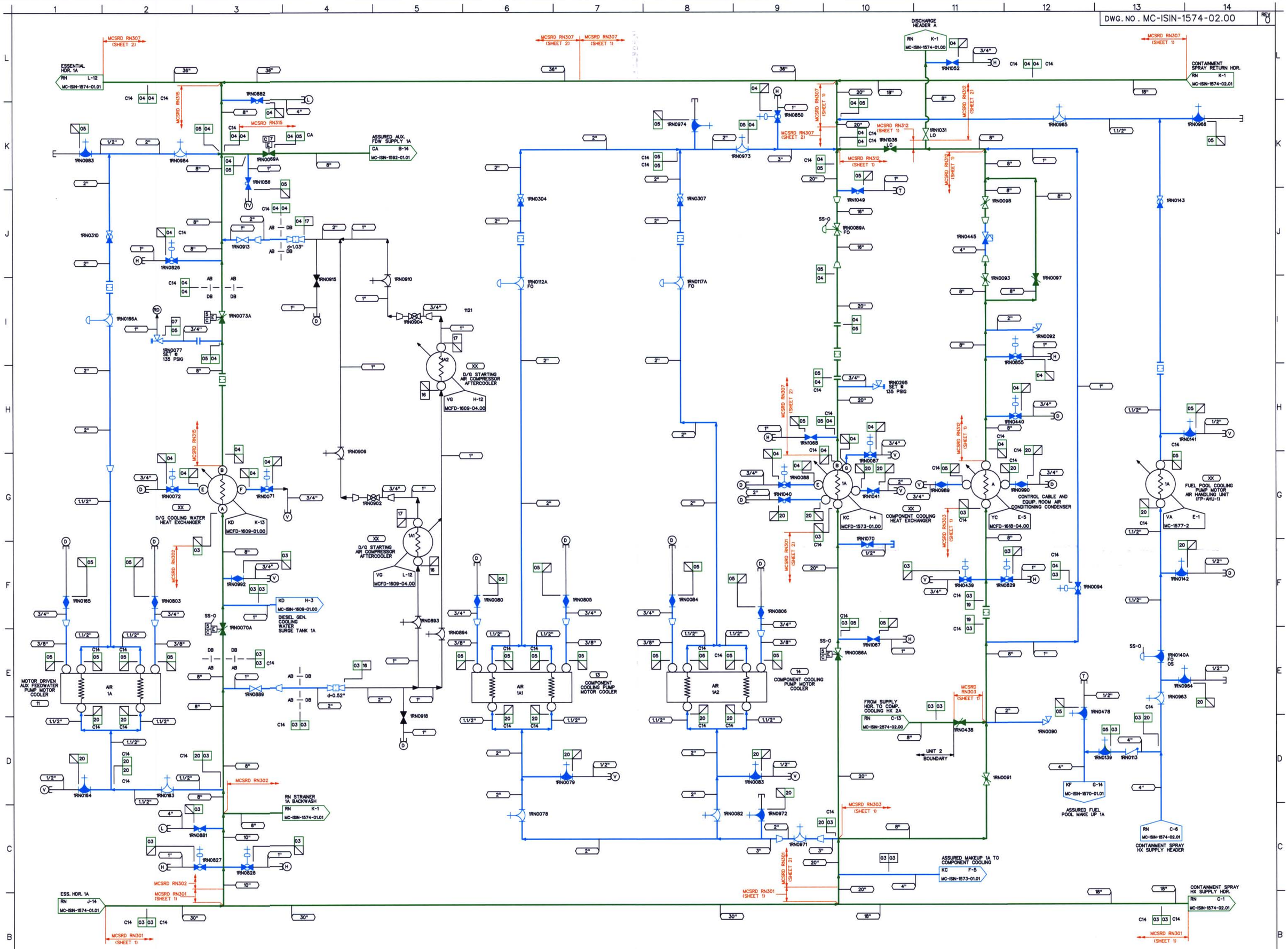

NOTES:

1. PIPING SHOWN IN BLUE IN THE FOLLOWING LINE LISTINGS SHALL BE EXEMPT PER IWD-1220(a) (1): RN03, RN04, RN05, RN19, RN20.
2. WELD ISO & MATH MODEL DRAWING REFERENCES ARE APPROXIMATE AND ARE FOR INFORMATION ONLY.

DESIGN PARAMETERS

LINE LISTING	PIPE SPEC.	PRESSURE	TEMPERATURE	CLASS	MATERIAL
CA05	PS 150.3	135 PSIG	160 F	C	CS
RN03	PS 150.3	135 PSIG	95 F	C	CS/SS
RN04	PS 150.3	135 PSIG	150 F	C	CS/SS
RN05	PS 151.3	135 PSIG	150 F	C	SS
RN07	PS 150.4	135 PSIG	150 F	G	CS
RN16	PS 151.4	135 PSIG	95 F	G	SS
RN17	PS 151.4	135 PSIG	150 F	G	SS
RN19	PS 151.3	135 PSIG	95 F	C	SS
RN20	PS 151.3	135 PSIG	95 F	C	SS

LEGEND

- ISI CLASS 1
- ISI CLASS 2
- ISI CLASS 3
- ISI EXEMPT
- NON-ISI

THIS DRAWING IS FOR INSERVICE INSPECTION ONLY AND SHALL NOT BE USED FOR OTHER PURPOSES SUCH AS MAINTENANCE, MODIFICATION, OR REPAIRS. THIS DRAWING SHALL BE REVISED WHEN AS-BUILT CHANGES AFFECT THE INSERVICE INSPECTION BOUNDARIES AND DETAILS OF THE COMPONENTS/SYSTEMS SHOWN.

NO.	REVISIONS	DRN	DATE	CHKD	DATE	APPR	DATE
ORIG	RELEASED FOR ISI USE ONLY	TDM	11-7-00	GDS	11-13-00	RKR	12-14-00

WAIVED — CIVIL, ELEC., MECH. INSPECTED

QA CONDITION 1

DUKE POWER COMPANY
MCGUIRE NUCLEAR STATION UNIT 1

ASME SECTION XI
INSERVICE INSPECTION NDE BOUNDARY OF NUCLEAR SERVICE WATER SYSTEM (RN)

DESIGNER	TIM MYERS	DATE 11-7-00	INSP	WAIVED	DATE —
DRAWN	TIM MYERS	DATE 11-7-00	INSP	WAIVED	DATE —
CHECKED	GARY D SCARBORO	DATE 11-7-00	APPR	R. KEVIN RHYNE	DATE 12-14-00

SCALE — DWG. NO. MC-ISIN-1574-02.00 REV 0

REFERENCE FLOW DIAGRAM MCFD-1574-02.00 REV. 9

ERN:MC0099YE

D-62