DWG. NO. MC-ISIN-1556-01.00 REV 0

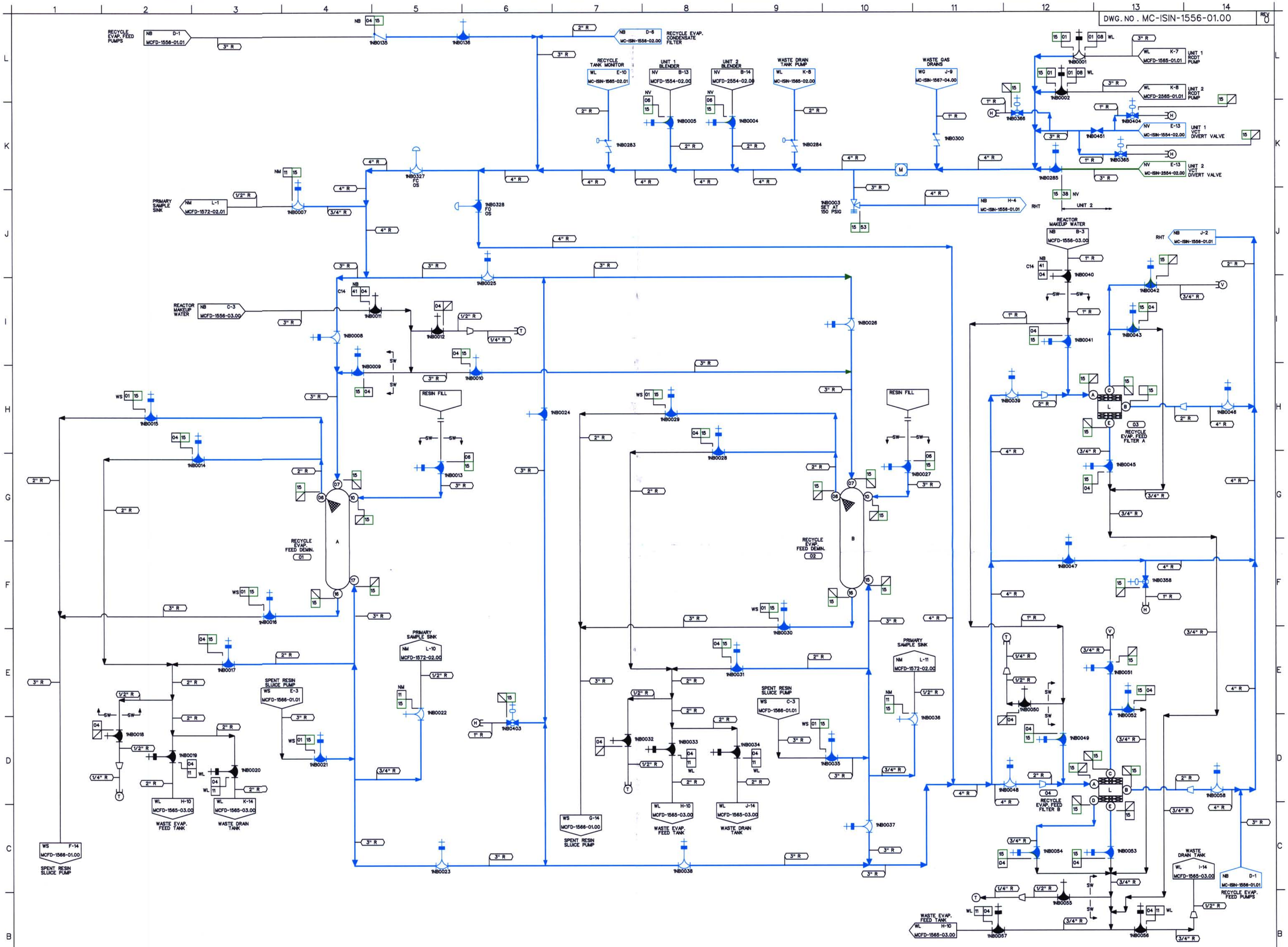

NOTES:

1. PIPING SHOWN IN BLUE IN THE FOLLOWING LINE LISTINGS IS EXEMPT DUE TO NOT BEING CONSIDERED A PART OF D-A CATEGORY PER ENG. NOTE DATED 5/22/00: NB15, NB53.
2. PIPING SHOWN IN BLUE IN THE FOLLOWING LINE LISTINGS IS EXEMPT PER IWD-1220(a)(1): NV38.

DESIGN PARAMETERS

LINE LISTING	PIPE SPEC.	PRESSURE	TEMPERATURE	CLASS	MATERIAL
NB01	PS 151.4	150 PSIG	200 F	E	SS
NB04	PS 151.4	150 PSIG	200 F	E	SS
NB06	PS 151.4	150 PSIG	200 F	H	SS
NB15	PS 151.3	150 PSIG	200 F	C	SS
NB41	PS 151.4	30 PSIG	100 F	E	SS
NB53	PS 151.3	50 PSIG	200 F	C	SS
NM11	TS 2701.1	150 PSIG	200 F	E	ST
NV06	PS 151.4	150 PSIG	175 F	E	SS
NV38	PS 151.3	150 PSIG	145 F	C	SS
WL08	PS 151.4	150 PSIG	200 F	E	SS
WL11	PS 151.4	50 PSIG	200 F	E	SS
WS01	PS 151.4	150 PSIG	150 F	E	SS

LEGEND

- ISI CLASS 1
- ISI CLASS 2
- ISI CLASS 3
- ISI EXEMPT
- NON-ISI

THIS DRAWING IS FOR INSERVICE INSPECTION ONLY AND SHALL NOT BE USED FOR OTHER PURPOSES SUCH AS MAINTENANCE, MODIFICATION, OR REPAIRS. THIS DRAWING SHALL BE REVISED WHEN AS-BUILT CHANGES AFFECT THE INSERVICE INSPECTION BOUNDARIES AND DETAILS OF THE COMPONENTS/SYSTEMS SHOWN.

NO.	REVISIONS	DRN	DATE	CHKD	DATE	APPR	DATE	CIVIL	ELEC.	MECH.
ORIG	RELEASED FOR ISI USE ONLY	TDM	11-7-00	GDS	11-13-00	RKR	12-14-00	W A I V E D		

INSPECTED

QA CONDITION 1 AND 2

DUKE POWER COMPANY
MCGUIRE NUCLEAR STATION UNIT 1 AND 2

ASME SECTION XI
INSERVICE INSPECTION NDE BOUNDARY OF
BORON RECYCLE SYSTEM
(NB)

DESIGNER TIM MYERS DATE 11-7-00 INSP. WAIVED DATE
DRAWN TIM MYERS DATE 11-7-00 INSP. WAIVED DATE
CHECKED GARY D SCARBORO DATE 11-7-00 APPR. R. KEVIN RHYNE DATE 12-14-00
SCALE DWG. NO. MC-ISIN-1556-01.00 REV 0

REFERENCE FLOW DIAGRAM
MCFD-1556-01.00 REV. 4
ERN: MC0099WM

D-17