DWG. NO. MC-ISIN-1555-1.0 REV. 0

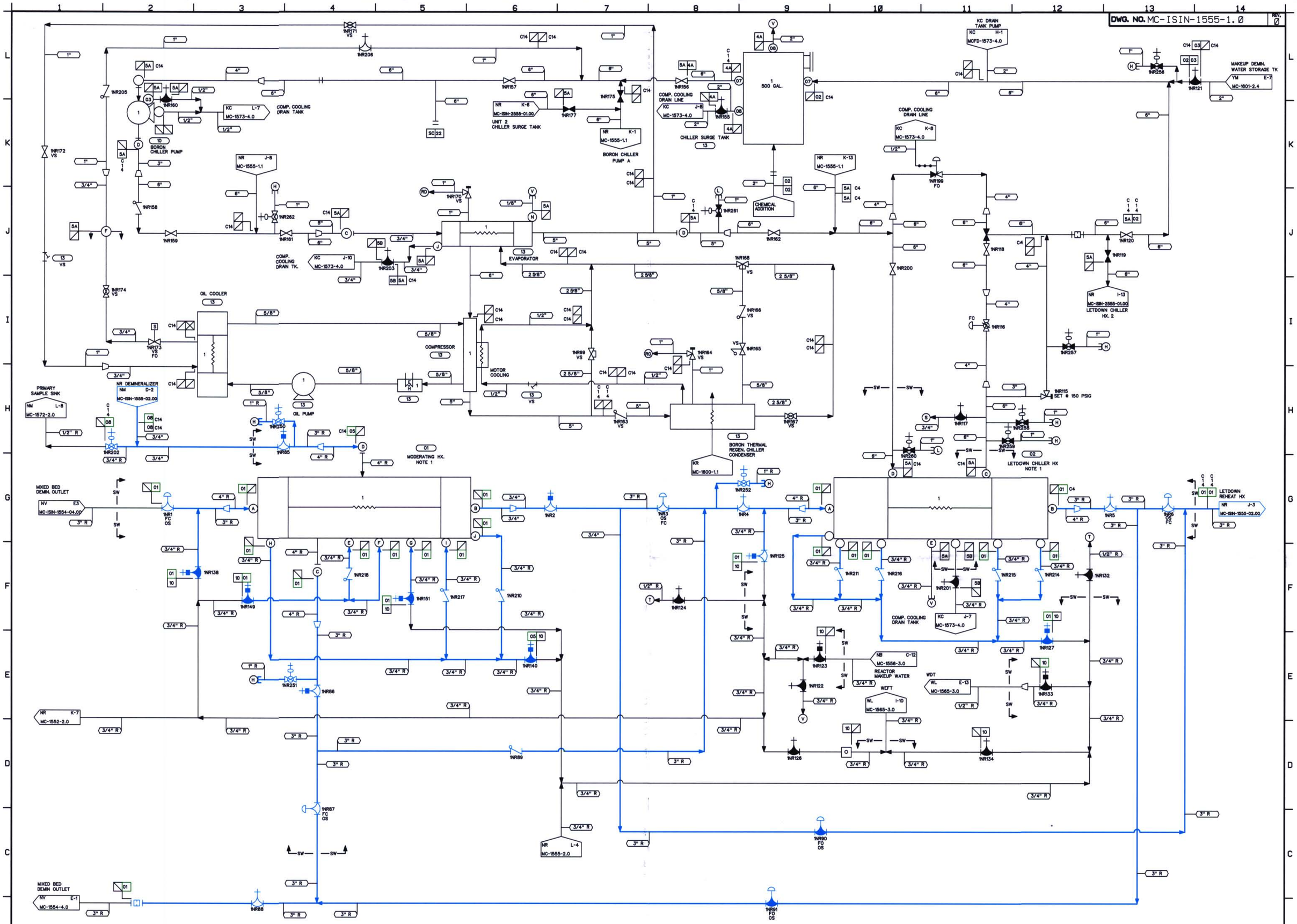

NOTES:

1. THIS COMPONENT WAS NOT BUILT TO ASME III. HOWEVER,IT WAS BUILT TO THE APPLICABLE CODE AT THE TIME OV PURCHASE AS PER McGUIRE FSAR TABLE 1A. 4-2.
2. NR SYSTEM IS NON-FUNCTIONAL AND ALL EXEMPT PER NOTE FROM ENGINEERING DATED 11/17/00.

DESIGN PARAMETERS

LINE LISTING	PRESSURE	TEMPERATURE	CLASS	MATERIAL
01	255 PSIG	145° F	C	SS
02	15 PSIG	105° F	G	CS
03	150 PSIG	120° F	G	CS
04A	75 PSIG	105° F	G	CS
04B	75 PSIG	105° F	G	SS
05A	150 PSIG	105° F	G	CS
05B	150 PSIG	105° F	G	SS
06	255 PSIG	145° F	C	SS
10	255 PSIG	145° F	E	SS

LEGEND

- ISI CLASS 1
- ISI CLASS 2
- ISI CLASS 3
- ISI EXEMPT
- NON-ISI

THIS DRAWING IS FOR INSERVICE INSPECTION ONLY AND SHALL NOT BE USED FOR OTHER PURPOSES SUCH AS MAINTENANCE, MODIFICATION, OR REPAIRS. THIS DRAWING SHALL BE REVISED WHEN AS-BUILT CHANGES AFFECT THE INSERVICE INSPECTION BOUNDARIES AND DETAILS OF THE COMPONENTS/SYSTEMS SHOWN.

NO.	REVISIONS	DRN	DATE	CHKD	DATE	APPR	DATE
ORIG.	RELEASED FOR ISI USE ONLY	TDM	11-13-00	GDS	11-13-00	RKR	12-14-00

W A I V E D — CIVIL / ELEC. / MECH. — INSPECTED

Q.A. CONDITION 2

Q.A. CONDITION 1

DUKE POWER COMPANY
McGUIRE NUCLEAR STATION UNIT 1

ASME SECTION XI
INSERVICE INSPECTION NDE BOUNDARY OF
BORON THERMAL REGENERATION
SYSTEM (NR)

DESIGNER TIM MYERS DATE 11-13-00 INSP. WAIVED DATE —
DRAWN TIM MYERS DATE 11-13-00 INSP. WAIVED DATE —
CHECKED/GARY D SCARBORO DATE 11-13-00 APPR. R. KEVIN RHYNE DATE 12-14-00
SCALE DWG. NO. MC-ISIN-1555-01.00 REV. 0

REFERENCE FLOW DIAGRAM MC-1555-01 REV. 8
ERN: MC009ALW

D-15