DWG. NO. MC-ISIN-1554-04.00 REV 0

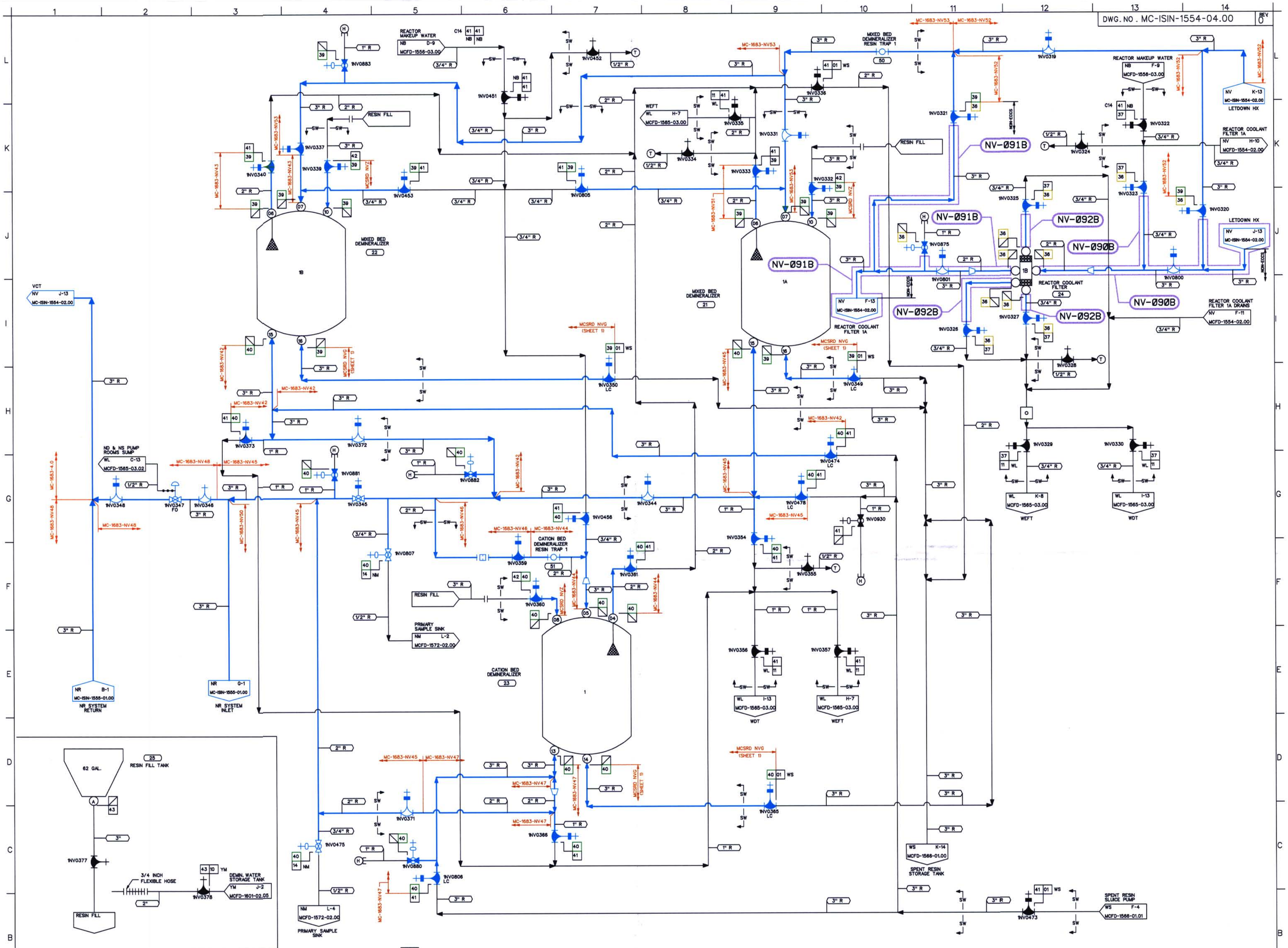

NOTES:

1. PIPING SHOWN IN BLUE IN THE FOLLOWING LINE LISTINGS SHALL BE EXEMPT PER IWC-1222(a)(NON-ECCS): NV38.
2. PIPING SHOWN IN BLUE IN THE FOLLOWING LINE LISTINGS SHALL BE EXEMPT PER IWD-1220(a)(1): NV39, NV40.
3. WELD ISO & MATH MODEL DRAWING REFERENCES ARE APPROXIMATE AND ARE FOR INFORMATION ONLY.

DESIGN PARAMETERS

LINE LISTING	PIPE SPEC.	PRESSURE	TEMPERATURE	CLASS	MATERIAL
NB41	PS 151.4	30 PSIG	100 F	E	SS
NM14	TS 2701.1	255 PSIG	145 F	E	ST
NV36	PS 151.2	255 PSIG	150 F	B	SS
NV37	PS 151.4	255 PSIG	150 F	E	SS
NV39	PS 151.3	255 PSIG	145 F	C	SS
NV40	PS 151.3	255 PSIG	145 F	C	SS
NV41	PS 151.4	255 PSIG	145 F	E	SS
NV42	PS 151.4	255 PSIG	145 F	H	SS
NV43	PS 151.4	150 PSIG	120 F	G	SS
WL11	PS 151.4	50 PSIG	200 F	E	SS
WS01	PS 151.4	150 PSIG	150 F	E	SS
YM10	PS 157	150 PSIG	120 F	H	AL

LEGEND

- ISI CLASS 1
- ISI CLASS 2
- ISI CLASS 3
- ISI EXEMPT
- NON-ISI

THIS DRAWING IS FOR INSERVICE INSPECTION ONLY AND SHALL NOT BE USED FOR OTHER PURPOSES SUCH AS MAINTENANCE, MODIFICATION, OR REPAIRS. THIS DRAWING SHALL BE REVISED WHEN AS-BUILT CHANGES AFFECT THE INSERVICE INSPECTION BOUNDARIES AND DETAILS OF THE COMPONENTS/SYSTEMS SHOWN.

NO.	REVISIONS	DRN	DATE	CHKD	DATE	APPR	DATE
ORIG	RELEASED FOR ISI USE ONLY	TDM	11-7-00	PTF	11-8-00	RKR	12-14-00

W A I V E D — CIVIL, ELEC., MECH — INSPECTED

QA CONDITION 1 AND 2

DUKE POWER COMPANY
MCGUIRE NUCLEAR STATION UNIT 1

ASME SECTION XI
INSERVICE INSPECTION NDE BOUNDARY OF CHEMICAL AND VOLUME CONTROL SYSTEM (NV)

DESIGNER	TIM MYERS	DATE	11-7-00	INSP	WAIVED	DATE	—
DRAWN	TIM MYERS	DATE	11-7-00	INSP	WAIVED	DATE	—
CHECKED	GARY D SCARBORO	DATE	11-7-00	APPR	S. KEVIN RHYNE	DATE	12-14-00

SCALE — DWG. NO. MC-ISIN-1554-04.00 — REV 0

REFERENCE FLOW DIAGRAM MCFD-1554-04.00 REV. 6

ERN: MC0099WK

D-13