DWG. NO. MC-ISIN-1554-01.01 REV 0

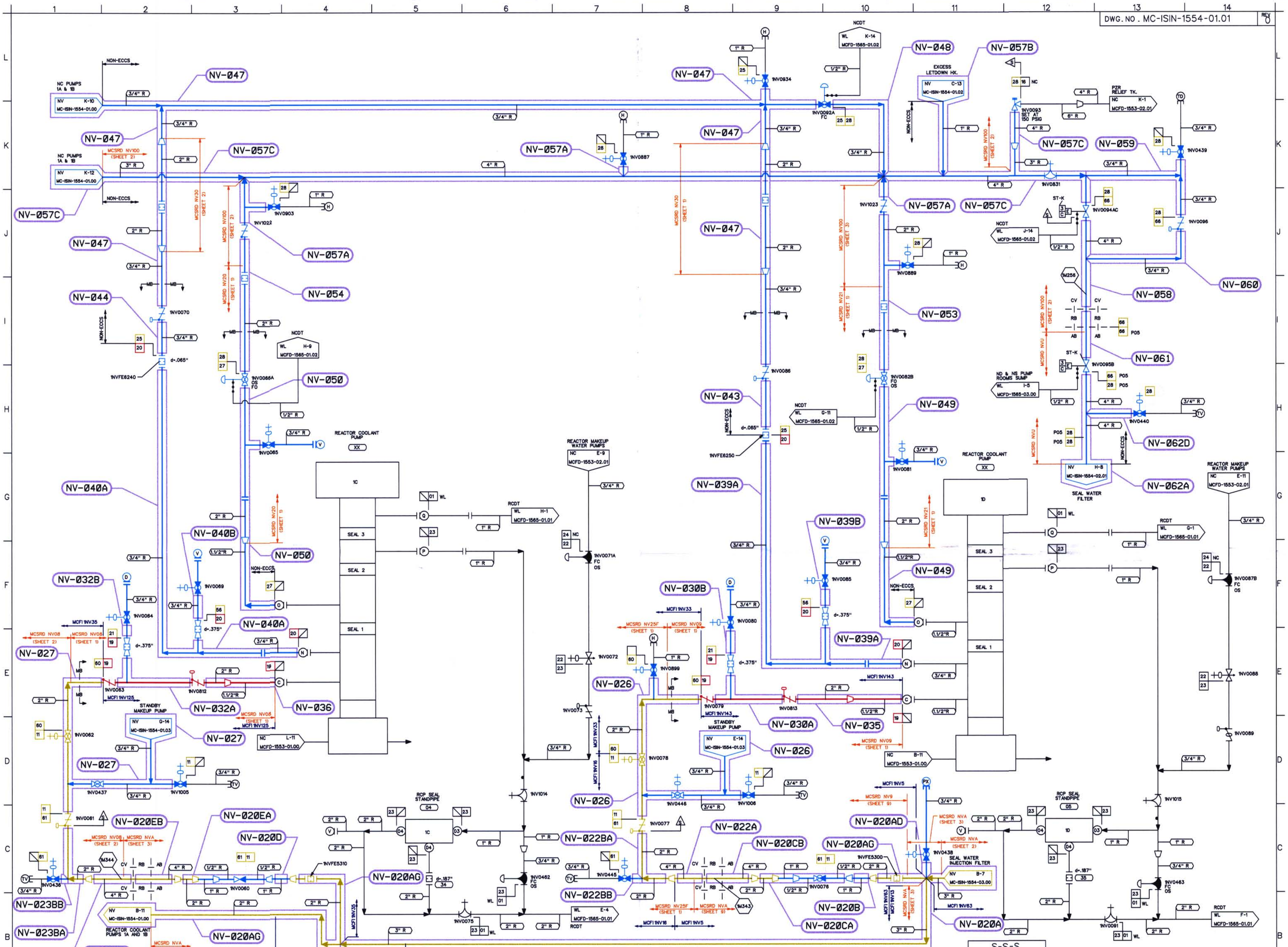

NOTES:

1. PIPING SHOWN IN BLUE IN THE FOLLOWING LINE LISTINGS SHALL BE EXEMPT PER IWB-1220(a): NV19, NV20.
2. PIPING SHOWN IN BLUE IN THE FOLLOWING LINE LISTINGS SHALL BE EXEMPT PER IWC-1221(a)(1): NV11, NV21, NV68, NV61.
3. PIPING SHOWN IN BLUE IN THE FOLLOWING LINE LISTINGS SHALL BE EXEMPT PER IWC-1222(a): NV25, NV27, NV28, NV56, NV66.
4. WELD ISO & MATH MODEL DRAWING REFERENCES ARE APPROXIMATE AND ARE FOR INFORMATION ONLY.

REFERENCE FLOW DIAGRAM MCFD-1554-01.01 REV. 5

ERN: MC0099WE

DESIGN PARAMETERS

LINE LISTING	PIPE SPEC.	PRESSURE	TEMPERATURE	CLASS	MATERIAL
NC16	PS 151.4	100 PSIG	383 F	E	SS
NC24	PS 151.4	150 PSIG	200 F	E	SS
NV11	PS 1501.2	2735 PSIG	189 F	B	SS
NV19	PS 1501.1	2485 PSIG	650 F	A	SS
NV20	PS 1501.1	2485 PSIG	650 F	A	SS
NV21	PS 1501.2	2485 PSIG	650 F	B	SS
NV22	PS 151.4	150 PSIG	200 F	E	SS
NV23	PS 151.4	150 PSIG	200 F	E	SS
NV25	PS 2501.2	2485 PSIG	650 F	B	SS
NV27	PS 2501.2	2485 PSIG	650 F	B	SS

DESIGN PARAMETERS

LINE LISTING	PIPE SPEC.	PRESSURE	TEMPERATURE	CLASS	MATERIAL
NV28	PS 151.2	150 PSIG	225 F	B	SS
NV56	PS 2501.2	2485 PSIG	650 F	B	SS
NV60	PS 1501.2	2485 PSIG	189 F	B	SS
NV61	PS 1501.2	2735 PSIG	250 F	B	SS
NV66	PS 151.2	150 PSIG	250 F	B	SS
WL01	PS 151.4	100 PSIG	200 F	E	SS

LEGEND

- ISI CLASS 1
- ISI CLASS 2
- ISI CLASS 3
- ISI EXEMPT
- NON-ISI

THIS DRAWING IS FOR INSERVICE INSPECTION ONLY AND SHALL NOT BE USED FOR OTHER PURPOSES SUCH AS MAINTENANCE, MODIFICATION, OR REPAIRS. THIS DRAWING SHALL BE REVISED WHEN AS-BUILT CHANGES AFFECT THE INSERVICE INSPECTION BOUNDARIES AND DETAILS OF THE COMPONENTS/SYSTEMS SHOWN.

NO.	REVISIONS	DRN	DATE	CHKD	DATE	APPR	DATE
ORIG	RELEASED FOR ISI USE ONLY	TDM	12-13-00	PTF	12-14-00	RKR	12-14-00

W A I V E D — CIVIL / ELEC. / MECH — INSPECTED

QA CONDITION 1 AND 2

DUKE POWER COMPANY
MCGUIRE NUCLEAR STATION UNIT 1

ASME SECTION XI
INSERVICE INSPECTION NDE BOUNDARY OF CHEMICAL AND VOLUME CONTROL SYSTEM (NV)

DESIGNER	TIM MYERS	DATE	12-13-00	INSP.	WAIVED
DRAWN	TIM MYERS	DATE	12-13-00	INSP.	WAIVED
CHECKED	GARY D SCARBORO	DATE	12-13-00	APPR.	R. KEVIN RHYNE

SCALE — DWG. NO. MC-ISIN-1554-01.01 — REV 0

D-6