DWG. NO. MC-ISIN-1553-02.01 REV 1

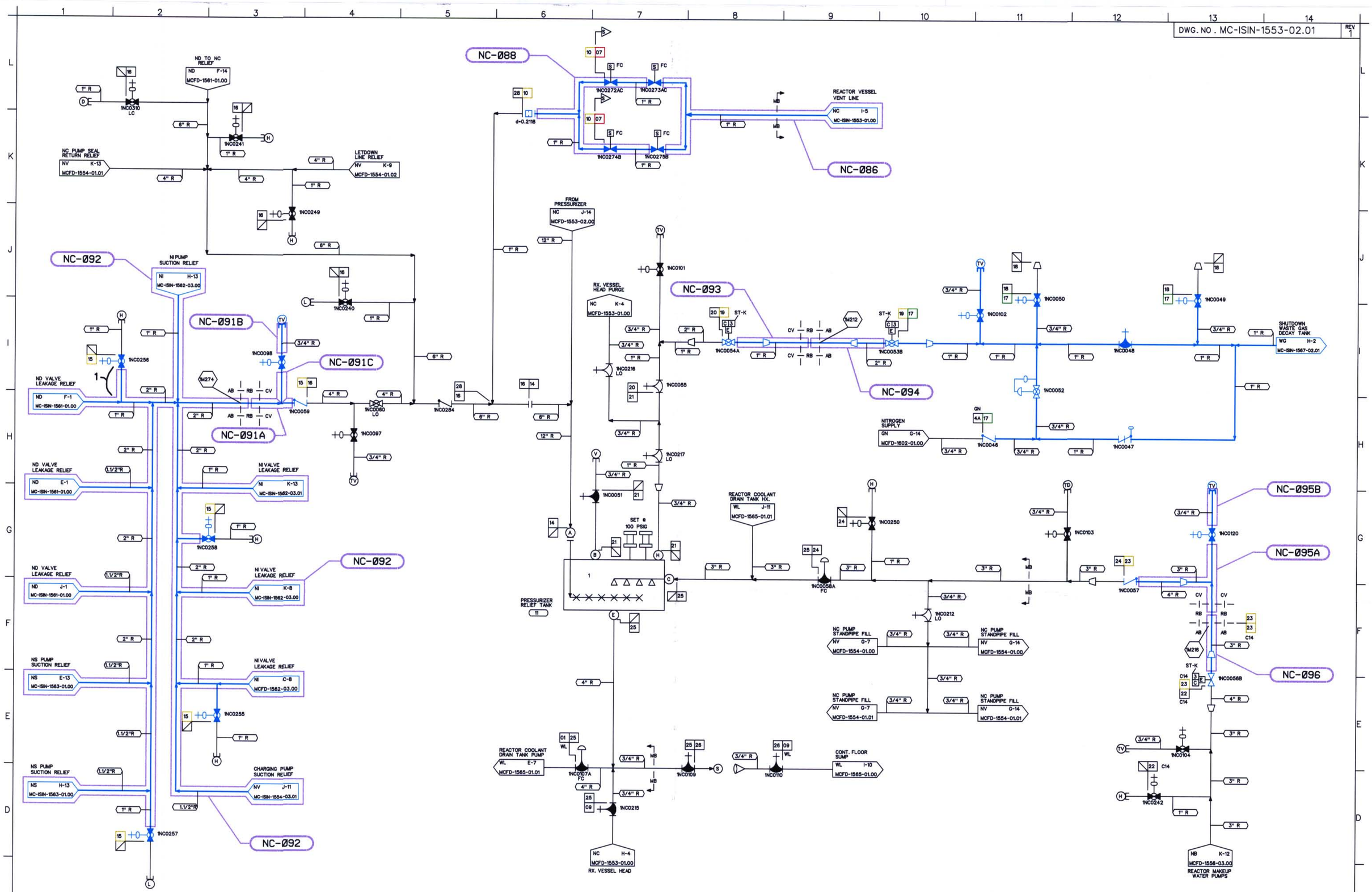

NOTES:

1. PIPING SHOWN IN BLUE IN THE FOLLOWING LINE LISTINGS IS EXEMPT PER IWB 1220(b)(1): NC07.
2. PIPING SHOWN IN BLUE IN THE FOLLOWING LINE LISTINGS IS EXEMPT PER IWC 1220(a): NC10, NC15, NC19, NC23.
3. PIPING SHOWN IN BLUE IN THE FOLLOWING LINE LISTINGS IS EXEMPT PER IWD 1220(a)(1): NC17.

DESIGN PARAMETERS

LINE LISTING	PIPE SPEC.	PRESSURE	TEMPERATURE	CLASS	MATERIAL
GN4A	PS 150.4	150 PSIG	120 F	G	CS
NC07	PS 2501.1	2485 PSIG	650 F	A	SS
NC09	PS 2501.4	50 PSIG	400 F	E	SS
NC10	PS 2501.2	2485 PSIG	650 F	B	SS
NC14	PS 601.4	500 PSIG	470 F	E	SS
NC15	PS 151.2	100 PSIG	350 F	B	SS
NC16	PS 151.4	100 PSIG	383 F	E	SS
NC17	PS 151.3	150 PSIG	200 F	C	SS
NC18	PS 151.4	150 PSIG	200 F	E	SS
NC19	PS 151.2	150 PSIG	250 F	B	SS
NC20	PS 151.4	150 PSIG	200 F	E	SS
NC21	PS 151.4	100 PSIG	200 F	E	SS
NC22	PS 151.4	150 PSIG	100 F	E	SS
NC23	PS 151.2	150 PSIG	250 F	B	SS
NC24	PS 151.4	150 PSIG	200 F	E	SS
NC25	PS 151.4	100 PSIG	200 F	E	SS
NC26	PS 151.4	50 PSIG	200 F	E	SS
NC28	PS 601.4	650 PSIG	500 F	E	SS
WL01	PS 151.4	100 PSIG	200 F	E	SS
WL09	PS 151.4	50 PSIG	200 F	E	SS

LEGEND

- ISI CLASS 1
- ISI CLASS 2
- ISI CLASS 3
- ISI EXEMPT
- NON-ISI

S-S-S
STANDBY SHUTDOWN SYSTEM

THIS DRAWING IS FOR INSERVICE INSPECTION ONLY AND SHALL NOT BE USED FOR OTHER PURPOSES SUCH AS MAINTENANCE, MODIFICATION, OR REPAIRS. THIS DRAWING SHALL BE REVISED WHEN AS-BUILT CHANGES AFFECT THE INSERVICE INSPECTION BOUNDARIES AND DETAILS OF THE COMPONENTS/SYSTEMS SHOWN.

NO.	REVISIONS	DRN	DATE	CHKD	DATE	APPR	DATE	CIVIL	ELEC.	MECH
1	REVISED SEGMENT NC-0092	TDM	5-2-01	GDS	5-2-01	RKR	5-2-01	W A I V E D		
ORIG	RELEASED FOR ISI USE ONLY	TDM	11-7-00	PTF	11-8-00	RKR	12-14-00	W A I V E D		

INSPECTED

QA CONDITION 1 AND 2

DUKE POWER COMPANY
MCGUIRE NUCLEAR STATION UNIT 1

ASME SECTION XI
INSERVICE INSPECTION NDE BOUNDARY OF
REACTOR COOLANT SYSTEM
(NC)

DESIGNER TIM MYERS DATE 11-7-00 INSP WAIVED DATE
DRAWN TIM MYERS DATE 11-7-00 INSP WAIVED DATE
CHECKED GARY D SCARBORO DATE 11-7-00 APPR R. KEVIN RHYNE DATE 12-14-00
SCALE DWG.NO. MC-ISIN-1553-02.01 REV 1

REFERENCE FLOW DIAGRAM
MCFD-1553-02.01 REV. 3
ERN:MC0099WB

D-3