DWG. NO. MC-ISIN-1553-02.00 REV 0

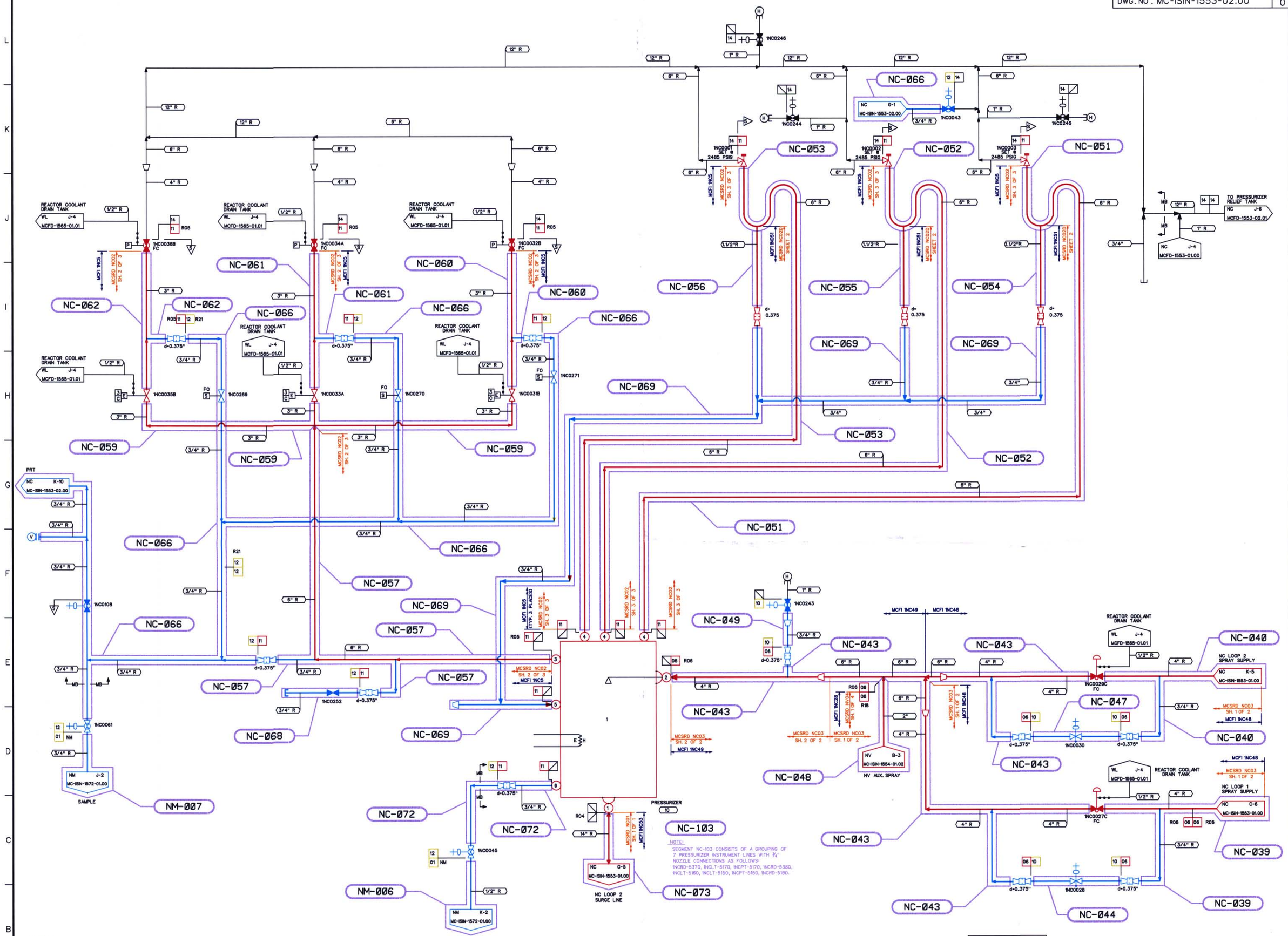

NOTE:
SEGMENT NC-103 CONSISTS OF A GROUPING OF 7 PRESSURIZER INSTRUMENT LINES WITH ¾" NOZZLE CONNECTIONS AS FOLLOWS:
1NCRD-5370, 1NCLT-5170, 1NCPT-5170, 1NCRD-5380, 1NCLT-5160, 1NCLT-5150, 1NCPT-5150, 1NCRD-5180.

NOTES:

1. PIPING SHOWN IN BLUE IN THE FOLLOWING LINE LISTINGS IS EXEMPT PER IWB-1220(BX1): NC06, NC11.
2. PIPING SHOWN IN BLUE IN THE FOLLOWING LINE LISTINGS IS EXEMPT PER IWC-1222(a): NC10, NC12, NM01.
3. WELD ISO & MATH MODEL DRAWING REFERENCES ARE APPROXIMATE AND ARE FOR INFORMATION ONLY.

DESIGN PARAMETERS

LINE LISTING	PIPE SPEC.	PRESSURE	TEMPERATURE	CLASS	MATERIAL
NC06	PS 2501.1	2485 PSIG	650 F	A	SS
NC10	PS 2501.2	2485 PSIG	650 F	B	SS
NC11	PS 2501.1	2485 PSIG	680 F	A	SS
NC12	PS 2501.2	2485 PSIG	670 F	B	SS
NC14	PS 601.4	500 PSIG	470 F	E	SS
NM01	PS 2501.2	2485 PSIG	670 F	B	SS

LEGEND
- ISI CLASS 1
- ISI CLASS 2
- ISI CLASS 3
- ISI EXEMPT
- NON-ISI

THIS DRAWING IS FOR INSERVICE INSPECTION ONLY AND SHALL NOT BE USED FOR OTHER PURPOSES SUCH AS MAINTENANCE, MODIFICATION, OR REPAIRS. THIS DRAWING SHALL BE REVISED WHEN AS-BUILT CHANGES AFFECT THE INSERVICE INSPECTION BOUNDARIES AND DETAILS OF THE COMPONENTS/SYSTEMS SHOWN.

S-S-S
STANDBY SHUTDOWN SYSTEM

NO.	REVISIONS	DRN	DATE	CHKD	DATE	APPR	DATE	CIVIL	ELEC.	MECH.
ORIG	RELEASED FOR ISI USE ONLY	TDM	12-12-00	PTF	12-12-00	RKR	12-14-00	W A I V E D		

INSPECTED

QA CONDITION 1 AND 2

DUKE POWER COMPANY
MCGUIRE NUCLEAR STATION UNIT 1

ASME SECTION XI
INSERVICE INSPECTION NDE BOUNDARY OF REACTOR COOLANT SYSTEM
(NC)

DESIGNER	TIM MYERS	DATE 12-12-00	INSP WAIVED	DATE	
DRAWN	TIM MYERS	DATE 12-12-00	INSP WAIVED	DATE	
CHECKED	GARY D. SCARBORO	DATE 12-13-00	APPR R. KEVIN RHYNE	DATE 12-14-00	

SCALE DWG. NO. MC-ISIN-1553-02.00 REV 0

REFERENCE FLOW DIAGRAM MCFD-1553-02.00 REV. 3
ERN: MC0099WA

D-2