DWG. NO. MC-ISIN-1553-01.00 REV 0

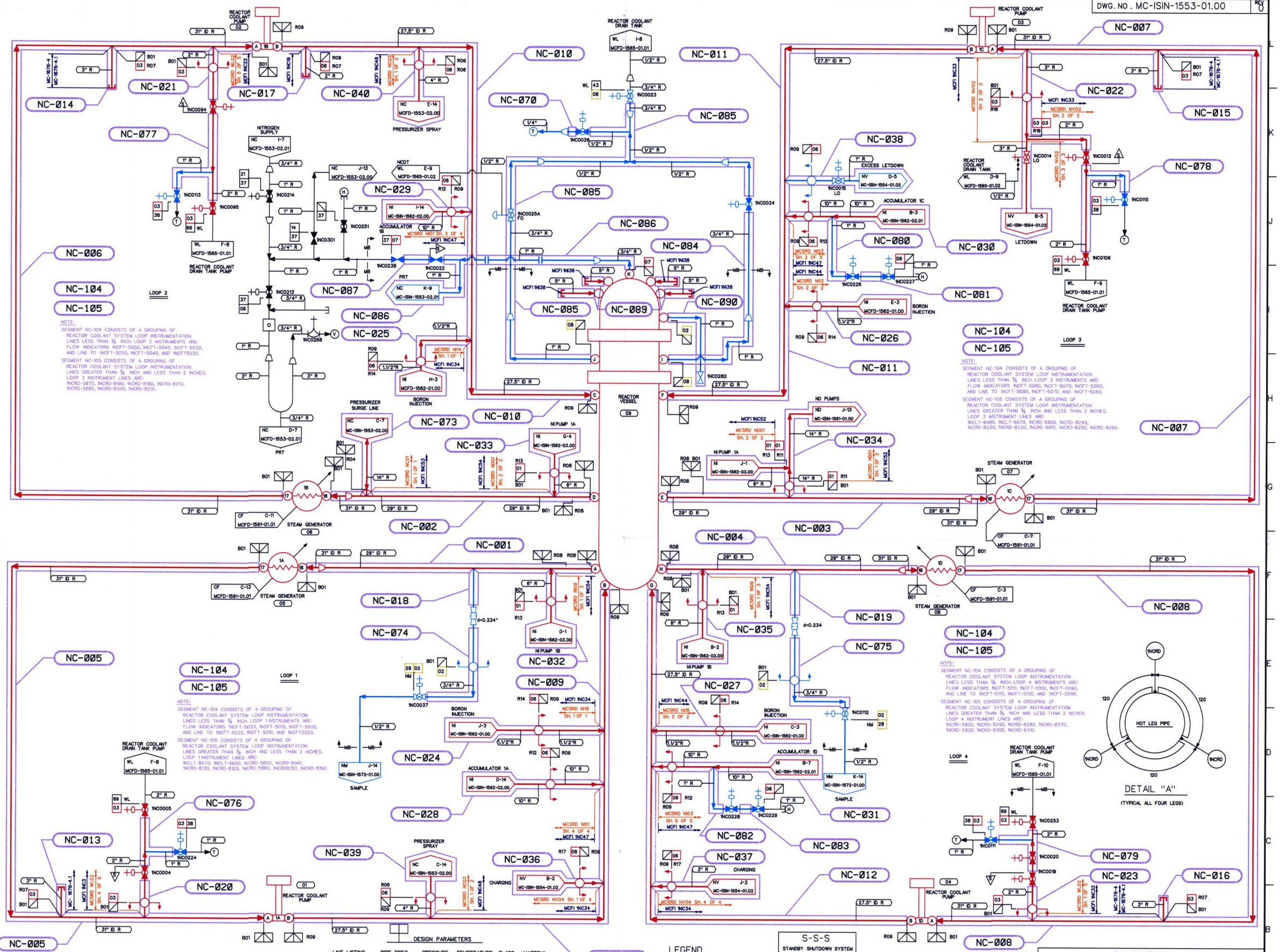

NOTES:

1. PIPING SHOWN IN BLUE IN THE FOLLOWING LINE LISTINGS SHALL BE EXEMPT PER IWB-1220(b)(1): NC03, NC05, NC07.
2. PIPING SHOWN IN BLUE IN THE FOLLOWING LINE LISTINGS SHALL BE EXEMPT PER IWC-1222(A): NC02, NC08, NM28.
3. WELD ISO & MATH MODEL DRAWING REFERENCES ARE APPROXIMATE AND ARE FOR INFORMATION ONLY.

REFERENCE FLOW DIAGRAM MCFD-1553-01.00 REV. 3

ERN: MC0099W9

DESIGN PARAMETERS

LINE LISTING	PIPE SPEC.	PRESSURE	TEMPERATURE	CLASS	MATERIAL
NC01	PS 2501.1	2485 PSIG	650 F	A	SS
NC02	PS 2501.2	2485 PSIG	650 F	B	SS
NC03	PS 2501.1	2485 PSIG	650 F	A	SS
NC06	PS 2501.1	2485 PSIG	650 F	A	SS
NC07	PS 2501.1	2485 PSIG	650 F	A	SS
NC08	PS 2501.2	2485 PSIG	650 F	B	SS
NC09	PS 2501.4	50 PSIG	400 F	E	SS
NC14	PS 601.4	500 PSIG	680 F	E	SS
NC21	PS 151.4	100 PSIG	200 F	E	SS
NC37	PS 2501.4	2485 PSIG	650 F	E	SS
NC38	PS 2501.4	2485 PSIG	650 F	E	SS
NM28	PS 2501.2	2485 PSIG	650 F	B	SS
WL01	PS 151.4	100 PSIG	200 F	E	SS
WL43	TS 2701.1	100 PSIG	200 F	E	ST
WL69	PS 2501.4	2485 PSIG	200 F	E	SS

LEGEND

- ISI CLASS 1
- ISI CLASS 2
- ISI CLASS 3
- ISI EXEMPT
- NON-ISI

THIS DRAWING IS FOR INSERVICE INSPECTION ONLY AND SHALL NOT BE USED FOR OTHER PURPOSES SUCH AS MAINTENANCE, MODIFICATION, OR REPAIRS. THIS DRAWING SHALL BE REVISED WHEN AS-BUILT CHANGES AFFECT THE INSERVICE INSPECTION BOUNDARIES AND DETAILS OF THE COMPONENTS/SYSTEMS SHOWN.

NO.	REVISIONS	DRN	DATE	CHKD	DATE	APPR	DATE
ORIG	RELEASED FOR ISI USE ONLY	TDM	12-12-00	PTF	12-12-00	RKR	12-14-00

WAIVED — CIVIL, ELEC, MECH — INSPECTED

QA CONDITION 1 AND 2

DUKE POWER COMPANY
MCGUIRE NUCLEAR STATION UNIT 1

ASME SECTION XI
INSERVICE INSPECTION NDE BOUNDARY OF REACTOR COOLANT SYSTEM
(NC)

DESIGNER	TIM MYERS	DATE 12-12-00	INSP.	WAIVED	DATE —
DRAWN	TIM MYERS	DATE 12-12-00	INSP.	WAIVED	DATE —
CHECKED	GARY D. SCARBORO	DATE 12-13-00	APPR.	R. KEVIN RHYNE	DATE 12-14-00

SCALE — DWG. NO. MC-ISIN-1553-01.00 — REV 0

D-1