NMC
Committed to Nuclear Excellence

Monticello Nuclear Generating Plant
2807 West County Road 75
Monticello, MN 55362-9637

Operated by Nuclear Management Company LLC

May 30, 2001

US Nuclear Regulatory Commission
Attn: Document Control Desk
Washington, DC 20555

10 CFR Part 50
Section 50.90

MONTICELLO NUCLEAR GENERATING PLANT
Docket No. 50-263 License No. DPR-22
License Amendment Request
Elimination of Local Suppression Pool Temperature Limits

Reference 1: NRC letter to BWROG, "Transmittal of Safety Evaluation of General Electric Co. Topical Reports; NEDO-30832 Entitled 'Elimination of Limit on Suppression Pool Temperature for SRV Discharge with Quenchers" and NEDO-31695 Entitled "BWR Suppression Pool Temperature Technical Specification Limits," dated August 29, 1994.

Attached is a license amendment request to eliminate local suppression pool temperature limits as the basis for limiting suppression pool mechanical loads due to unstable steam condensation during safety relief valve (SRV) actuations. This request is submitted in accordance with the provisions of 10 CFR Part 50, Section 50.90.

The current Monticello licensing basis includes local suppression pool temperature limits imposed via NUREG-0661, " Safety Evaluation Report, Mark I Containment Long-Term Program," and which were revised via NUREG-0783, "Suppression Pool Temperature Limits for BWR Containments," which was transmitted to licensees via Generic Letter 82-27. The purpose of the temperature limits are to limit mechanical loads which may be imposed on suppression pool components during SRV discharges into the suppression pool. The excessive loads may be present due to unstable steam condensation when the pool is at an elevated temperature. Using Reference 1, the limits may be eliminated for plants with SRV discharge T-quenchers located a sufficient distance from the Emergency Core Cooling System (ECCS) inlet. This amendment request justifies eliminating the local suppression pool temperature limits for the Monticello Nuclear Generating Plant.

Exhibit A contains a description of the proposed changes, the reasons for requesting the change, a supporting Safety Evaluation, a Determination of No Significant Hazards, and

A001

an Environmental Assessment. Exhibit B contains current Monticello Updated Safety Analysis Report (USAR) pages marked up to show the proposed changes.

The Monticello Operations Committee has reviewed this application. A copy of this submittal, along with the evaluation of No Significant Hazards Consideration, is being forwarded to our appointed state official pursuant to 10 CFR 50.91.

Upon approval, Nuclear Management Company (NMC) will revise the USAR to reflect elimination of local suppression pool temperature limits. The USAR change will be provided to the NRC in the first update which occurs greater than 180 days following NRC approval.

This submittal does not contain any new NRC commitments. This submittal does modify our prior commitment to assess suppression pool hydrodynamic loads in accordance with the acceptance criteria provided in NUREG-0661 in that suppression pool temperature limits will no longer apply.

If you have any questions regarding this License Amendment Request please contact Doug Neve, Licensing Manager (Interim), at 763-295-1353.

By _____ for Jeff Forbes
Jeff S. Forbes
Plant Manager
Monticello Nuclear Generating Plant

Subscribed to and sworn before me this 30th day of May, 2001

Samuel I. Shirey
Notary

SAMUEL I. SHIREY
NOTARY PUBLIC - MINNESOTA
My Comm. Exp. Jan. 31, 2005

Attachments:
Exhibit A – Evaluation of Proposed Change to the Monticello Licensing Basis
Exhibit B - Current Monticello Updated Safety Analysis Report Pages Marked up With Proposed Changes

cc: Regional Administrator-III, NRC
NRR Project Manager, NRC
Sr. Resident Inspector, NRC
Minnesota Department of Commerce
J. Silberg, Esq.

Exhibit A

License Amendment Request
Elimination of Local Suppression Pool Temperature Limits

Evaluation of Proposed Change to the Monticello Updated Safety Analysis Report

Pursuant to 10 CFR Part 50, Section 50.90, Nuclear Management Company (NMC) hereby proposes the following amendment to Facility Operating License DPR-22, for the Monticello Nuclear Generating Plant.

Background

The current Monticello Licensing Basis includes local suppression pool temperature (LSPT) limits imposed via NUREG-0661, "Safety Evaluation Report, Mark I Containment Long-Term Program," (Reference 1). The temperature limits were relaxed via NUREG-0783, "Suppression Pool Temperature Limits for BWR Containments," (Reference 2), which was transmitted to licensees via NRC Generic Letter (GL) 82-27 (Reference 3). The purpose of the temperature limits are to limit mechanical loads which may be imposed on suppression pool components during safety relief valve (SRV) discharges into the suppression pool. The excessive loads may be present due to unstable steam condensation when the pool is at an elevated temperature. Unstable steam condensation had been observed in plants without SRV discharge quenchers. Quenchers (e.g., X-quenchers or T-quenchers) installed on the SRV discharge assure that steam condensation is stable, insuring minimal loading on the suppression pool components. General Electric (GE) Report NEDC-24387-P (Reference 4) provides an evaluation of Monticello suppression pool temperature response to show that LSPT limits are not exceeded.

Elimination of the LSPT limits was justified in General Electric (GE) report NEDO-30832, "Elimination of Limit on Local Suppression Pool Temperature for SRV Discharge with Quenchers" (Reference 5). At the time NUREG-0783 was issued there were insufficient data and calculational techniques available to justify elimination of LSPT limits for plants which had quenchers installed. After NUREG-0783 was issued, scaling laws were developed and confirmed to model discharge and condensation of steam in a suppression pool. Additionally, data from full scale and subscale testing was gathered and analyzed to support elimination of LSPT limits. Reference 5 presents the improvements in scaling and availability of more data as justification that LSPT limits can be eliminated on the basis that quenchers prevent excessive suppression pool loads during SRV discharge.

Based on NRC and Brookhaven National Laboratories review of NEDO-30832, Reference 5, the limits may be eliminated for plants with SRV discharge T-quenchers located a sufficient distance from the Emergency Core Cooling System (ECCS) inlet.

Exhibit A

As part of the Power Uprate Program for Monticello, LSPT limits were evaluated to ensure that there would be no significant effect on LSPT due to operation at a higher rated thermal power. As discussed in the NRC safety evaluation of the up-rate amendment (Reference 7), an evaluation was done using the methods and assumptions of Reference 4. The evaluation concluded that power up-rate had no significant effect on LSPT.

Proposed Change

NMC requests NRC approval to eliminate LSPT limits required by NUREG-0661 (Reference 1). The Monticello USAR will be updated to reflect elimination of LSPT limits. A draft of the Monticello USAR change is provided for information in Exhibit B.

Reasons for the Change

An evaluation of the proposal to eliminate LSPT limits, using criteria in effect before March 13, 2001, resulted in the determination that an unreviewed safety question exists as defined in 10 CFR 50.59, because a change to the USAR described licensing basis will be required which will involve a reduction in margin as defined in the basis for the technical specifications. A re-evaluation of the proposed change under the current version of 10 CFR 50.59 would show that NRC approval, before implementation, is still required for this change. NRC approval is required because this change results in a departure from a method of evaluation described in the USAR which was used in establishing the design bases for the LSPT limits. Therefore, this license amendment request is submitted pursuant to 10 CFR Part 50, Section 50.90.

Safety Evaluation

In the NRC letter to the Boiling Water Reactor Owners Group (BWROG), Reference 6, the NRC provided a review of the GE Report NEDO-30832 (Reference 5), proposal to eliminate LSPT limits for SRV discharge with quenchers. Reference 6 states in part:

> *"...the elimination of local suppression pool temperature limit is acceptable if the plant has emergency safety features pump inlet below the elevation of the quencher. The staff found that the quencher device is effective in maintaining the unstable condensation oscillation load to benign levels when the pool is operated at temperatures near saturation. ..."*
>
> *"The staff will not repeat its review of the matters described in the report and found acceptable when the report appears as a reference in license applications, except to ensure that the material presented applies to the plant involved. ..."*

Exhibit A

The NRC safety evaluation forwarded by the NRC letter to the BWROG, Reference 6, provides guidance to determine whether the approval applies to a specific plant. Two items must be addressed. The first is to show that the quencher design installed is consistent with the quencher design which is used to form the basis for approval. The second item is to show that there is no concern with steam ingestion in the ECCS suction during accident mitigation. These items are addressed below:

Quencher Design

The SRV discharge quenchers installed at Monticello are T-quenchers, similar in design with the quenchers discussed in References 5 and 6. The Monticello T-quenchers are qualified in accordance with NUREG-0661 (Reference 1), as discussed in the Monticello USAR, Section 5.2 (Reference 8). In plant testing of SRV discharge through the T-quenchers was performed at Monticello in support of the Reference 5 topical report. Reference 6 concludes that NEDO-30832 (Reference 5) demonstrates that unstable containment loads are bounded by the air clearing hydrodynamic load when T-quenchers are used.

Steam Ingestion

The NRC safety evaluation included in Reference 6 and the attached reports by Brookhaven National Laboratory (BNL) discuss that under stagnant and localized saturated conditions in the laboratory test configuration of Reference 5, a steam plume was observed during an extended steam discharge. The concern with a steam plume is that if the ECCS suction is above the T-quencher outlet, the steam may be ingested in the ECCS pump suction and could possibly impact system operability during accident mitigation. The following discussion shows that:

1. Suppression pool conditions and SRV discharges following an accident will not support the formation of a steam plume; and

2. The Monticello configuration is not conducive to steam ingestion into the ECCS.

1. <u>Suppression Pool Conditions and SRV Discharges</u>

With the exception of a Station Blackout (SBO) event, the Residual Heat Removal (RHR) System is operated during postulated accidents at Monticello (Reference 9). This provides mixing in the suppression pool, which prevents localized saturation conditions. Therefore, a steam plume would not be formed and steam ingestion by ECCS pump inlets would not be a concern.

During a SBO event there would be no forced flow in the suppression pool via the RHR system. SRV discharges could provide some flow due to holes in one of the two end caps which were intended to provide counter clockwise flow in the suppression pool. However, during the four hour coping period at Monticello, analysis shows that there would be no extended SRV discharges or blowdowns. This would result in very little counter clockwise flow being established, but without extended discharges saturated conditions would not be established either. In the SBO analysis, the Low-Low Set System would periodically open an SRV long enough to reduce reactor pressure 80 psi. Each opening would only last a few minutes. Note that per the SBO assumptions provided by NUMARC 87-00 (Reference 10) SRVs are assumed to operate properly including normal valve reseating. The analysis shows that after every few cycles of an SRV for pressure control the reactor level would be lowered to the setpoint for High Pressure Coolant Injection (HPCI) initiation. HPCI would take water from the suppression pool and inject it into the reactor to restore level. Each HPCI initiation would last 4 to 5 minutes. Besides restoring reactor level, the cooler make-up water would also reduce reactor pressure which would ensure that there would be no SRV discharge during HPCI operation.

The SBO analysis calculated that HPCI would be automatically initiated 5 times. After the last HPCI initiation the bulk suppression pool temperature would be approximately 145°F which is well below saturation conditions. At the end of the four hour coping period the suppression pool temperature reaches 160.5°F. Therefore, a steam plume would not be formed and steam ingestion by ECCS pump inlets at Monticello would not be a concern.

2. Monticello Configuration

a. T-Quencher/ECCS Inlet Configuration:

Attached to Reference 6 is a BNL report entitled "Evaluation of BWR Owners Group Small Scale Program on Local Pool Temperature Limits." The Evaluation states that one approach to addressing the steam ingestion issue is to show that ingestion cannot occur. The evaluation states in part:

> *"To demonstrate that ingestion is precluded, the position of suction headers relative to plume trajectory should be examined, particularly in terms of pool elevation. Since all SRVs are candidates to fail open, all possible combinations should be included in any such survey. The configuration found in Monticello plant is an example of an arrangement we would consider unlikely to result in steam plume ingestion. In this case, suction headers and quenchers are at about the same elevation and separated by at least one 'bay' or sector. This arrangement could be used as a standard of comparison for all other BWR plants."*

This conclusion is supported by the BNL report "Technical Evaluation Report on Local Pool Temperature Limit for BWR Plants," also attached to Reference 6, which concludes in part that:

> *"...A reasonable and conservative estimate of the maximum lateral extent of any steam plume formed when saturated conditions exist in the vicinity of a quencher device will be no greater than 1.5 meters."*

After Reference 6 was issued, the Monticello ECCS suction strainers were replaced with much larger strainers. However, the physical inlet to the ECCS was not changed. Instead of a small strainer in the middle of a bay, the new suction strainers extend the entire length of the bay without a T-quencher, as shown in Figure A attached. Prior to the modification, the small suction strainers were at approximately the same elevation as the T-quenchers. Following the modification, the top elevation of the new suction strainers is approximately two feet above the T-quencher elevation, as shown in Figure B attached. It should be noted that the ECCS inlet elevation was not changed. Although the elevation of the suction strainers entrance is above that of the T-quenchers, the lateral distance exceeds the 1.5 meters considered by BNL as a reasonable and conservative estimate of the maximum lateral extent of any steam plume, see attached Figure A for 1.5 meter zone around T-quenchers. Therefore, the physical separation between the T-quenchers and ECCS suction strainers is adequate to prevent steam ingestion if there were saturated conditions in the suppression pool with an extended discharge of an SRV.

b. Steam Bubble versus ECCS Suction Strainer Flow Characteristics

As stated above the physical separation of the T-quenchers and ECCS suction strainers would preclude ingestion of a steam plume if saturated conditions were to exist in a stagnant pool. However, the Monticello T-quenchers were designed with holes in one end cap to promote a counter clockwise flow in the suppression pool. If the conditions for a steam plume were to exist, a counter clockwise flow would cause a steam plume to drift in the direction of an ECCS strainer (see Figure A). Since all of the ECCS pumps take suction from a common ring header which is connected to the four ECCS suction strainers, there is a very small suction flow field to attract a steam plume. For example, with HPCI running at 3000 gallons per minute (6.7 cubic feet per second) and a combined circumscribed surface area of approximately 600 square feet for the ECCS suction strainers, the approach velocity at the surface of each suction strainer would be approximately 0.01 foot per second. With such a small approach velocity at the ECCS suction strainer and the fact that a steam plume would be rising by several orders of magnitude faster, the likelihood of a steam plume being ingested in an ECCS strainer is extremely remote.

Therefore, even in a hypothetical worst-case scenario, because of the design of the T-quenchers and ECCS suction strainers at Monticello, steam ingestion into an ECCS suction strainer would have no impact on the operability of the ECCS pumps.

Determination of No Significant Hazards Consideration:

Nuclear Management Company (NMC) proposes a license amendment for Monticello Nuclear Generating Plant which would eliminate local suppression pool temperature limits. The proposed amendment has been evaluated to determine whether it constitutes a significant hazards consideration as required by 10 CFR Part 50, Section 50.91 using standards provided in Section 50.92. This analysis is provided below:

1. The proposed amendment will not involve a significant increase in the probability or consequences of an accident previously evaluated.

Eliminating the Local Suppression Pool Temperature Limits (LSPTLs) will not introduce new equipment or new equipment methods of operation, and will not alter existing system relationships. LSPTLs are not an accident initiator and does not affect other accident initiators. The integrity of fission product barriers do not rely on LSPTLs since mechanical loads on containment will not be exceeded and ECCS operation in the event of an accident will not be adversely affected as demonstrated and approved in Reference 6.

Therefore, the proposed amendment will not significantly increase the probability or the consequences of an accident previously evaluated.

2. The proposed amendment will not create the possibility of a new or different kind of accident from any accident previously analyzed.

Eliminating the LSPTLs will not introduce new equipment or new equipment methods of operation, and will not alter existing system relationships. Since containment integrity and ECCS operation will not be challenged, new or different kinds of accidents are not created.

Therefore, the proposed amendment will not create the possibility of a new or different kind of accident from any accident previously evaluated.

3. The proposed amendment will not involve a significant reduction in the margin of safety.

Since LSPTLs are not required to limit mechanical loads on containment, the margin of safety associated with containment integrity is not significantly reduced. Since LSPTLs are not required to prevent steam binding of the ECCS pumps, the margin of safety associated with ECCS operation is not significantly reduced.

Therefore, the proposed amendment will not involve a significant reduction in the margin of safety.

Environmental Assessment

Nuclear Management Company has evaluated the proposed change and determined that:

1. The change does not involve a significant hazards consideration.

2. The change does not involve a significant change in the type or significant increase in the amounts of any effluent that may be released offsite, or

3. The change does not involve a significant increase in individual or cumulative occupational radiation exposure.

Accordingly, the proposed change meets the eligibility criterion for categorical exclusion set forth in 10 CFR Part 51, Section 51.22(c)(9). Therefore, pursuant to 10 CFR Part 51, Section 51.22(b), an environmental assessment of the proposed change is not required.

References:

1. NUREG-0661, "Safety Evaluation Report, Mark I Containment Long-Term Program," dated July 1980

2. NUREG-0783, "Suppression Pool Temperature Limits for BWR Containments," dated December, 1981

3. Generic Letter 82-27, "Transmittal of NUREG-0783, "Guidelines for Confirmatory In-Plant Tests of Safety-Relief Valve Discharges for BWR Plants,' and NUREG-0783, 'Suppression Pool Temperature Limits for BWR Containments,'" dated November 15, 1982

4. GE Report NEDC-24387-P, "Monticello Nuclear Generating Suppression Pool Temperature Responses," dated December, 1981

5. GE Report NEDO-30832, "Elimination of Limit on Local Suppression Pool Temperature for SRV Discharge with Quenchers," dated December 1984

6. NRC letter to BWROG, "Transmittal of Safety Evaluation of General Electric Co. Topical Reports; NEDO-30832 Entitled Elimination of Limit on Local Suppression Pool Temperature for SRV Discharge With Quenchers" and NEDO-31695 Entitled "BWR Suppression Pool Temperature Technical Specification Limits," dated August 29, 1994

References (Continued):

7. NRC letter to NSP, "Monticello Nuclear Generating Plant – Issuance of Amendment Re: Power Uprate Program (TAC No. M96238)," dated September 16, 1998

8. Monticello USAR, Section 5.2, "Primary Containment System," Revision 18

9. Monticello USAR, Section 14, "Accident Analysis," Revision 18

10. NUMARC 87-00, "Guidelines and Technical Bases for NUMARC Initiatives Addressing Station Blackout at Light Water Reactors," dated November 1987

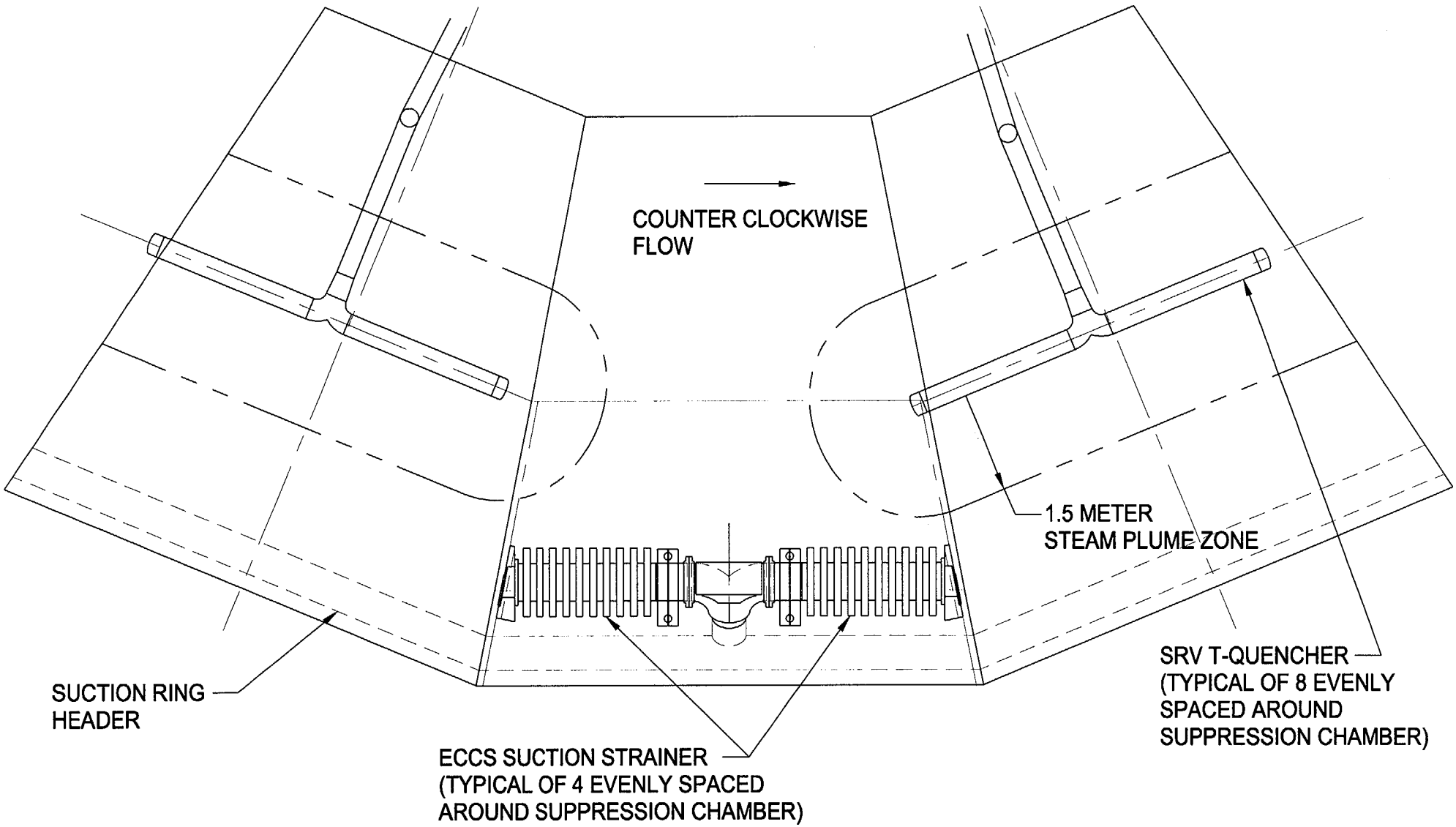

FIGURE A
PLAN VIEW OF 3 MITERED SECTIONS
OF SUPPRESSION CHAMBER
(NOTE: OTHER INTERNAL STRUCTURES NOT SHOWN FOR CLARITY)

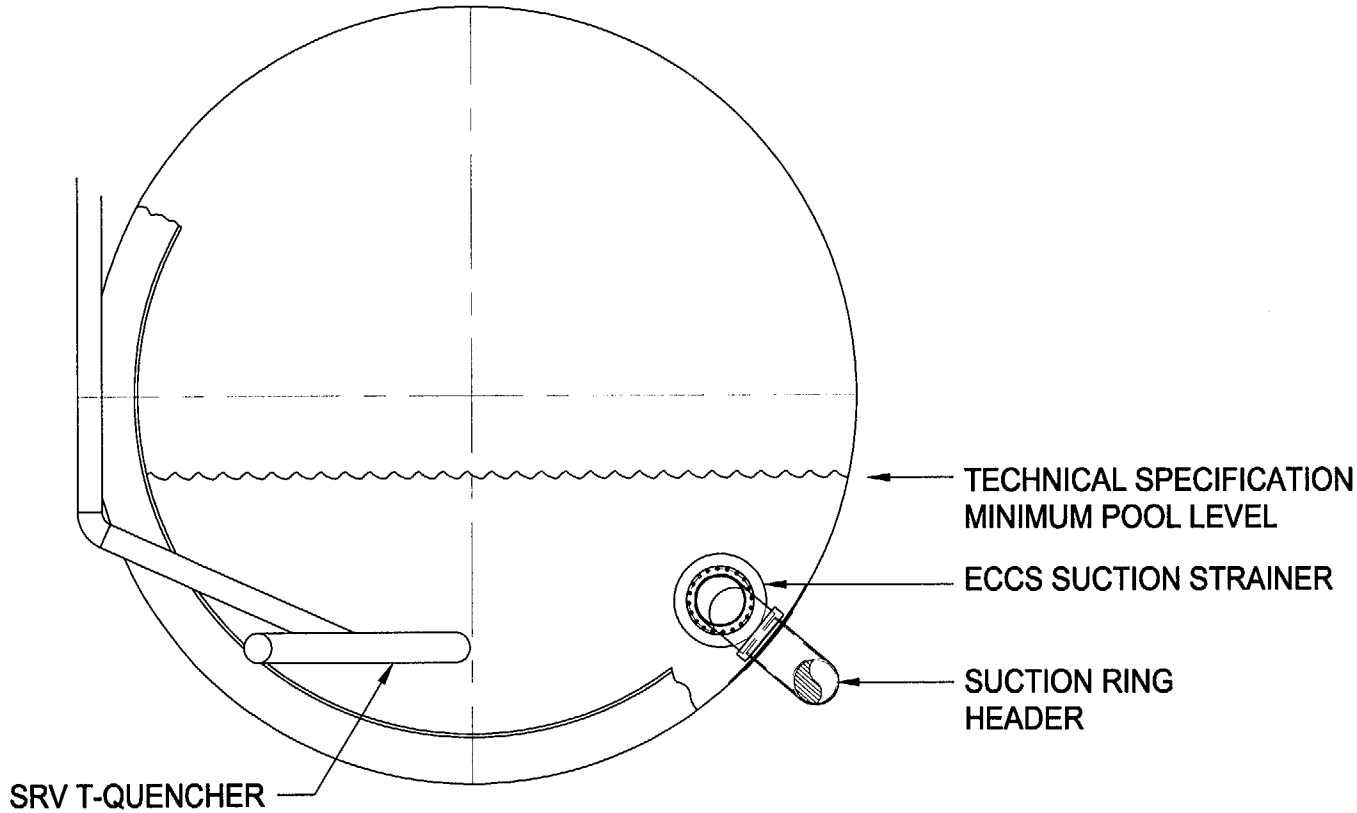

FIGURE B
ELEVATION VIEW OF SUPPRESSION CHAMBER CROSS SECTION
(NOTE: OTHER INTERNAL STRUCTURES NOT SHOWN FOR CLARITY)

Exhibit B

License Amendment Request
Elimination of Local Suppression Pool Temperature Limits

Draft Changes to the Monticello USAR

This Exhibit consists of the current Monticello USAR pages marked up to show the draft changes to reflect elimination of local suppression pool temperature limits. The pages included in the exhibit are listed below:

Pages

USAR Section 5.2

Page 36 of 74
Page 37 of 74
Page 38 of 74
Page 72 of 74

USAR Section 5.4

Page 5 of 10
Page 10 of 10

USAR 5. Figures

Page 25 of 33

documentation by the NRC subsequently resulted in the issuance of the Mark I Containment Short Term Program Safety Evaluation Report in December 1977 (Reference 18). This report concluded that licensed domestic BWR Mark I facilities could continue to operate safely, without undue risk to the health and safety of the public, during an interim period while the Long Term Program was conducted.

In June 1976, activities relevant to the Long Term Program commenced. A detailed description of the Long Term Program and plans for its implementation are available in References 19 and 20. Extensive experimental and analytical programs performed by the members of the Mark I owners group yielded new insights relative to load definition and structural assessment techniques as set forth in References 21 and 22. The methodology utilized as reviewed and accepted by the NRC provides a conservative and uniform basis for the evaluation of containment structures and torus attached piping to ensure the margin of safety as per the original containment design. See Reference 23 for the NRC's acceptance criteria utilized in the formulation of the methodology employed by the program. Documents concerning the experimental and analytical programs undertaken for the Long Term Program are presented as References 24 through 62. The Monticello Long Term Program Plant Unique Analysis Reports (References 72 and 75) documents the efforts undertaken to address and resolve each of the applicable Reference 23 requirements. The Monticello Long Term Program Plant Unique Analysis Reports were reviewed by the NRC Staff and found to verify that the containment modifications made have restored the original design safety margin to the Mark I containment at the Monticello Plant (Reference 94).

In May, 1982, a number of concerns regarding the adequacy of the General Electric (GE) Mark III containment design were raised by a former GE employee, J M Humphrey. Although these concerns were specifically raised for the Mark III Containment, the Nuclear Regulatory Commission (NRC) felt that some of the issues may apply to the Mark I Containment design. In July, 1982, the NRC requested the Mark I Owners Group to address those concerns which they had identified as being potentially applicable to the Mark I Containment. A generic response was prepared and transmitted by the Mark I Owners Group in References 90 and 91. Independently, a review was performed of the applicability of the generic responses to Monticello and is documented in Reference 92. The conclusions of both the generic responses and review for applicability were that the "Humphrey Containment Concerns" were either not applicable or were being adequately addressed under the Mark I Containment Program.

The Monticello Nuclear Generating Plant takes advantage of the large thermal capacitance of the suppression pool during plant transients requiring safety/relief valve (SRV) actuation. Steam is discharged from the main steam lines through the SRVs and their accompanying discharge lines into the suppression pool where it is condensed, resulting in an increase in the temperature of the suppression pool water. ~~Although~~ Stable steam condensation is expected at all pool temperatures, ~~the Nuclear Regulatory~~

(~~References~~ 149 and 150) INSERT ATTACHED

INSERT for USAR Page 36 of 74

If an extended SRV steam discharge to the suppression pool under stagnant and saturated conditions were to occur it could create the potential for a steam plume or steam bubbles being ingested by the ECCS pump strainer inlets. Evaluation of this concern determined that it is not an issue for the Monticello Nuclear Generating Plant (References 151 and 152).

Commission (NRC) has imposed the following local temperature limits in the vicinity of T-type quencher discharge devices (Reference 63).

a. For all plant transients involving SRV operations during which the steam flux through the quencher perforations exceeds 94 lbm/ft^2-sec, the suppression pool local temperature shall not exceed 200°F.

b. For all plant transients involving SRV operations during which the steam flux through the quencher perforations is less than 42 lbm/ft^2-sec, the suppression pool local temperature shall be at least 20°F subcooled.

c. For all plant transients involving SRV operations during which the steam flux through the quencher perforations exceeds 42 lbm/ft^2-sec, but is less than 94 lbm/ft^2-sec, the suppression pool local temperature is obtained by linearly interpolating the local temperatures established under aforementioned items a and b.

Monticello T-quenchers have a submergence of 6.5 feet of water corresponding to 17.4 psia. The saturation temperature at 17.4 psia is 220.6°F. Thus, for limit b, a 20°F subcooling translates into a suppression pool local temperature limit of 200.6°F.

Since the steam mass flux through the quencher perforations is directly dependent on reactor vessel pressure, mass fluxes of 42 lbm/ft^2-sec and 94 lbm/ft^2-sec correspond to reactor vessel pressures of 202 psia and 457 psia, respectively.

The NRC suppression pool local temperature limits for Monticello are plotted versus reactor vessel pressures and are shown in Figure 5.2-24.

To demonstrate that these conditions are satisfied, the NRC has required that the following events be analyzed for local pool temperature response:

a. Stuck-Open SRV (SORV) During Power Operation. This event postulates that an SRV is inadvertently actuated while the plant is operating at power with only one residual heat removal (RHR) heat exchanger operable.

b. Same event as in a. above, except with the main steam isolation valve (MSIV) closure signal at the time of scram and with all RHR heat exchangers operable.

c. SRV discharge following isolation/scram. This event postulates that a sudden closure of the MSIVs and subsequent scram occur in response to plant operational transients with only one RHR heat exchanger operable.

d. SRV discharge following a small-break Loss-of-Coolant Accident. This event postulates that a small-break accident (SBA) occurs in the primary system with only one RHR heat exchanger operable.

e. Same event as in d. above, except with all RHR heat exchangers operable and with the loss of the shutdown cooling mode of the RHR system.

Long-term SRV discharge transients have been analyzed assuming an initial pool temperature of 90°F, which is the Technical Specification pool temperature limit for normal power operation. A summary of the transients analyzed and the corresponding pool temperature results is presented in Table 5.2-6.

The results show that in all cases the maximum local pool temperature in the vicinity of the T-Quenchers is below the NRC limit. Models, assumptions, and results of the analyses are presented in Reference 64.

5.2.3.6 Primary Containment Auxiliary Systems

5.2.3.6.1 Cooling and Ventilation Systems

Maintaining the bulk average drywell ambient temperature less than 135°F and localized temperatures below 150°F during normal plant operation assures that the insulation on motors, isolation valves, operators and sensors, instrument cable, electrical cable and gasket materials or sealants used at the penetrations will have a sustained life. Drywell atmosphere is circulated through the drywell and the coolers by fans, and the reactor building closed cooling water system is employed to remove heat from the air coolers. Four coolers are provided. One of these coolers is designed for use as a spare during normal operation. A separate fan located outside the drywell is used to purge the drywell before the drywell is entered for maintenance or inspection. 00-487

5.2.3.6.2 Isolation System

Since a rupture of a large line penetrating the containment and connecting to the reactor coolant system may be postulated to take place at the containment boundary, the isolation valve for that line is required to be located within the containment. This inboard valve in each line is required to be closed automatically on various indications of reactor coolant loss. Additional reliability is added if a second valve is located outboard of the containment and as close as practical to the containment. This second valve also closes automatically if the inboard valve is normally open during reactor operation. If a failure involves one valve, the second valve is available to function as the containment barrier. The two valves in series are provided with independent power sources.

Main Steam Isolation Valve closure is required in the case of a steam line break outside the primary containment. An analysis of a complete sudden steam line break outside the primary containment is described in Section 14. It shows that the fuel clad is protected against loss of cooling if main steam isolation closure takes as long as 10.5 seconds. The calculated radiological effects of the radioactive material assumed released with the steam are shown to be well within the 10CFR100 guide values for an accident. 00-116

Table 5.2-6 DELETED ~~Result Summary of Monticello Pool Temperature Responses~~

No.	Event	Number of SRVs Manually Opened	Maximum Cooldown Rate (°F/hr)	Maximum Bulk Pool Temperature (°F)	Maximum Local Pool Temperature (°F)
1A	SORV at Power, 1 RHR loop	0	742	151	177
1B	SORV at Power, Spurious Isolation, 2 RHR Loops	1	782	168	180
2A	Rapid Depressurization at Isolated Hot Shutdown, 1 RHR loop	3	900	166	194
2B	SORV at Isolated Hot Shutdown, 2 RHR loops	1	782	146	156
2C	Normal Depressurization at Isolated Hot Shutdown, 2 RHR loops	3 (ADS)[1]	100	164	189
3B	SBA-Failure of Shutdown Cooling Mode, 2 RHR loops	3	100	155	165

1. ADS = Automatic Depressurization System

l/jm

54. General Electric report, NEDE-21885-P, "Mark I Containment Program, Downcomer Reduced Submergence Functional Assessment Report, Task Number 6.6", K. W. Wong, June 1978.

55. General Electric report, NEDM-24527, "Long-Term Application of Drywell/Wetwell Differential Pressure Control," L. D. Steinart, March 1978.

56. General Electric report, NEDE-21887-P, "Mark I Containment Program, Limit Analysis of Downcomer-Ring Header Intersection", July 1978.

57. General Electric report, NEDO 24529, "Analysis to Justify Increased Allowable Stresses for the Mark I Vent Header When Subjected to Pool Swell Impact Loading, Task Number 3.1.5.1", R. P. Kennedy, et. al., May 1978.

58. General Electric report, NEDO-21991, "Mark I Containment Program, Basic Torus Shell Analysis, Task Number 3.1.5.3", February 1979.

59. General Electric report, NEDE-21492-P, "Mark I 1/12-Scale Pressure Suppression Pool Swell Test Program: Phase IV Tests", D. L. Galyardt, March 1977.

60. General Electric report, NEDE-21943-P, "Mark I Containment Program, 1/4-Scale Pressure Suppression Pool Swell Test Program - Download Oscillation, Task Number 5.5.2", September 1978.

61. General Electric report, NEDO-24612, "Mark I Containment Program, Vent Header Deflector Load Definition, Task 7.3.3", W. Kennedy and V. Kulkarni, April 1979.

62. General Electric report, NEDE-24520-P, "Rigid and Flexible Vent Header Testing in the Quarter-Scale Test Facility, Mark I Containment Program, Task 5.5.3", W. Kennedy et. al., March 1978.

DELETED

63. ~~NUREG-0783, "Suppression Pool Temperature Limits for BWR Containment", published November 1981.~~

DELETED

64. ~~General Electric report, NEDC-24387-P, "Monticello Nuclear Generating Plant Suppression Pool Temperature Response", December 1981.~~

65. "Elementary Fluid Mechanics", Vennard, p. 102.

66. "Journal of Structural Division", ASCE, Papers 1708-9, July 1958.

67. ORNL-NSIC-5-VI, "U.S. Reactor Containment Technology, A Compilation of Current Practice in Analysis, Design, Construction, Test and Operation", Oak Ridge National Laboratory and Bechtel, August 1965, Section 5.2.2.4 - "Hydrogen-Oxygen Reaction", p. 5.83, Figure 5.43a.

68. Deleted.

137. NRC (T. Kim) letter to NSP (R. O. Anderson), "Issuance of Amendment Re: Power Uprate Program (TAC No. M96238)", dated September 16, 1998.

138. NRC (D. M. Crutchfield) Generic Letter 95-07, "Pressure Locking and Thermal Binding of Safety Related Power-Operated Valves", dated August 17, 1995.

139. Handbook of Chemistry and Physics, 69th Edition, 1988-1989, page D-124, "Limits of Inflamability of Gases and Vapors in Air." 00-405

140. NRC (D. L. Ziemann) letter to NSP (L. O. Mayer), License Amendment No. 13, dated October 6, 1975. 00-801

141. NRC (J. G. Keppler) letter to NSP (D. E. Gilberts), Request for Response to IE Bulletin 80-08 - Examination of Containment Liner Penetration Welds, dated April 9, 1980.

142. NSP (D. E. Gilberts) letter to the NRC, "Response to IE Bulletin 80-08", dated July 1, 1980.

143. NSP (C. E. Larson) letter to the NRC (J. G. Keppler), Additional Response to IE Bulletin 80-08, "Examination of Containment Liner Penetration Welds", dated November 10, 1986. 00-446

144. NRC report NUREG/CR-3053, "Closeout of IE Bulletin 80-08: Examination of Containment Liner Penetration Welds", dated July 1984.

145. NRC (C. F. Lyon) letter to NSP (R. O. Anderson), Issuance of Amendment 107, re: Reactor Vessel Hydrostatic and Leakage Testing (TAC No. MA4867), dated November 24, 1999. 00-803

146. NRC (B. K. Grimes) Generic Letter 96-06, "Assurance of Equipment Operability and Containment Integrity During Design Basis Accident Conditions", dated September 30, 1996.

147. NRC (J. W. Roe) Generic Letter 96-06, "Assurance of Equipment Operability and Containment Integrity During Design Basis Accident Conditions", Supplement 1, dated November 13, 1997. 00-818

148. NRC (C. F. Lyon) letter to NSP (M. F. Hammer), "Completion of Licensing Action for Generic Letter 96-06 - Assurance of Equipment Operability and Containment Integrity During Design Basis Accident Conditions" (TAC No. M96835), dated May 18, 2000.

(SEE INSERT ATTACHED)

149. General Electric Report, NEDO-30832, "Elimination of Limit on Local Suppression Pool Temperature for SRV Discharge with Quenchers," December 1984.

150. NRC (G. M. Holahan) letter to BWROG (R. Pinelli), "Transmittal of Safety Evaluation of General Electric Company Topical Reports; NRDO-30832 entitled *Elimination of Limit on Local Suppression Pool Temperature for SRV Discharge with Quenchers,* and NEDO-31695 entitled *BWR Suppression Pool Temperature Technical Specification Limits,*" dated August 29, 1994.

151. NRC letter to NMC, "Issuance of Amendment Re: Elimination of Local Suppression Pool Temperature Limits,"

152. NMC (B. D. Day) to NRC, "License Amendment Request, Elimination of Local Suppression Pool Temperature Limits,"

Figure 5.2-24 DELETED ~~NRC Specified Local Pool Temperature Limit Based on NUREG 0783 for Monticello~~

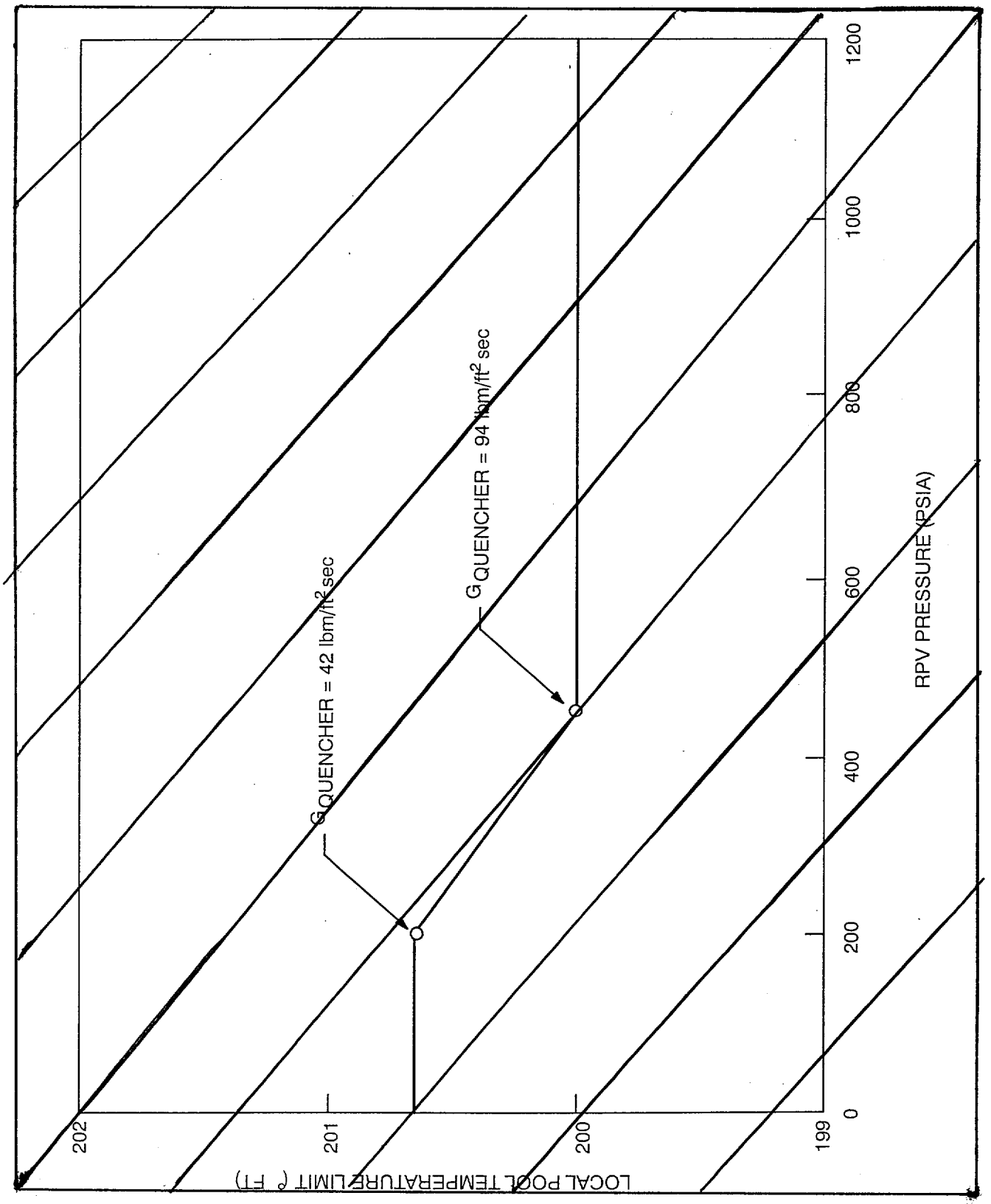

l/akr