KEWAUNEE
INITIAL LICENSE EXAM

DECEMBER 11 THRU 20, 2000

Copy of the letter from the facility submitting their post-examination comments, if applicable (ES-403). If the facility did not provide post-examination comments, then indicate this.

NMC
Committed to Nuclear Excellence

Kewaunee Nuclear Power Plant
N490, State Highway 42
Kewaunee, WI 54216-9511
920-388-2560

Operated by
Nuclear Management Company, LLC

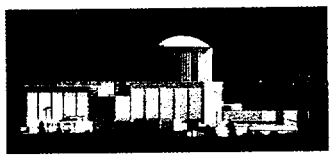

December 27, 2000

Mr. David Pelton
U.S. Nuclear Regulatory Commission, Region III
801 Warrenville Road
Lisle, IL 60532-4351

Dear Mr. Pelton:

Docket 50-305
Operating License DPR-43
Kewaunee Nuclear Power Plant
Licensing Examinations

In accordance with the requirements of NUREG-1021 and your recent conversations with George Baldwin of our staff, the required written examination facility comments are enclosed.

After reviewing the RO/SRO written examination administered Monday, December 11, 2000, at the Kewaunee Nuclear Plant, the facility has identified three questions that require action. Due to an oversight, we did not identify the inadequacies of two questions prior to exam administration. One additional question had previously been identified as inadequate and changed by the NRC Region III Lead Examiner. Unfortunately, through incompatibility of software platforms, these changes were never implemented. For these reasons, along with supporting documentation, we request the following:

RECORD#	RO EXAM#	SRO EXAM#	COMMENT	SUPPORTING DOCUMENTATION
41	29	32	DELETE	Enclosure 1
43	31	N/A	ACCEPT BOTH ANSWERS "b" and "c"	Enclosure 2
84	68	61	DELETE	Enclosure 3

We apologize for any inconvenience this may cause and hope to eliminate errors of this nature in the future. Thanks in advance for your consideration.

Respectfully,

Kyle A. Hoops
Manager-Kewaunee Plant

JJB/let

cc - U.S. NRC Resident Inspector, w/o Enc.
J.S. Guay, WPSC-KNPP, w/o Enc.
J.J. Brown, WPSC-KNPP, w/Enc.

ENCLOSURE 1

RECORD # 41

RO # 29

SR0 # 32

Question

Given the following conditions:

- The Plant is at 100% power
- Reactor trip breaker testing is being performed with Reactor Trip Bypass Breaker B (52/BYB) racked in and closed
- Both Reactor Trip Breakers (52/RTA and 52/RTB) are closed
- Reactor Trip Bypass Breaker A (52/BYB) is open and racked out

What is the effect on systems operation if Reactor Trip Bypass Breaker B (52/BYB) failed to open on a reactor trip?

a. Only the turbine control valves and intercept valves will close.

b. The Atmospheric Steam Dump valves receive an open signal but do NOT arm.

c. If RCS Low Tavg occurs, FW-7B/CV-31027 S/G B Main FW Valve does NOT close.

d. Following any SI actuation and reset, automatic actuation of SI Train B CANNOT be blocked.

Answer d

Exam Level B **Cognitive Level** Comprehension **Facility:** Kewaunee **Exam Date:** 12/11/00

Record Number: 41 **RO Number:** 29 **SRO Number:** 32

Tier: Plant Systems **RO Group:** 2 **SRO Group:** 2

012 Reactor Protection System

K1. Knowledge of the physical connections and/or cause-effect relationships between the Reactor Protection System and the following:

K1.05 ESFAS 3.8 3.9

Explanation of Answer

The Train B P-4 signal (reactor trip) is generated when both RTB and BYB open. Since BYB did NOT open P-4 is NOT generated. This signal inputs to SI Block logic, Feedwater Isolation logic and Turbine Trip logic. In the SI Block logic, a P-4 signal is required to provide a seal-in signal that will block any further SI actuation from a AUTOMATIC SI signal condition (PRZR pressure, Containment pressure, Steamline pressure). A) - Only Train B P-4 inputs to the turbine trip 20/OPC dump which specifically closes the control and intercept valves. However these valves are also crossed trip from Train A P-4 (which is NOT affected) via Auto Oil Stop. Train B P-4 also will close the Stop Valves & Reheat Stop Valves via the 20/ET dump. B) - Steam dumps are not affected by P-4 but do have a "trip" signal input from the turbine trip for shunting steam dump control from the load rejection controller to the turbine trip controller and for arming (supplying air) to the Atmospheric Dump Valves. C) - BOTH trains of P-4 input to both valves (FW-7A/B) to separate solenoid valves. The solenoid valves are in series and operation of either one will vent air from the valve controller and close the valve.

Reference Title	Facility Reference Number	Section	Page	Revision	L. O.
Logic Diagram - Reactor Trip Signals	XK100-144			5C	
Integrated Logic - DG Electric	E-1635			O	

Material Required for Examination

Facility Objective(s)

0470000001K02 - Explain the response to the operation of all Reactor Control & Protection system controls in accordance with Logic Diagrams/Schematics E2042, E2043, E2044, E2051-1, E2051-2, XK100-144...

0490000004K03 - Explain the basic principles of operation for the following major components of the CRD System per System Description 49:1) Rod Drive MG Sets2) Reactor Trip and Bypass Breakers

Question Source: NRC Exam Bank **Question Modification Method:** Significantly Modified

Question Source Comments: Watts Bar 2/96 NRC Exam. Changed several selections to plant specific P-4 input.

NONE CORRECT

GDK

Record Number: 41
RO Number: 29
SRO Number: 32

COMMENT:
In the Explanation of Answer, we agree that "P-4 is NOT generated" for Train B. This signal does NOT, however, go to the SI Block logic as shown on the attached E-1635 logic diagram. The only inputs for SI Block are the switch position, ES 46370, and PRZR Pressure. There is, therefore, no correct answer and we ask that this question be deleted from the exam.

From: "George E Baldwin" <GBALDWI@wpsr.com>
To: <Dlp1@nrc.gov>
Date: Tue, Jan 9, 2001 10:06 AM
Subject: record 41 technical error

In the ESF circuitry there are two (2) "block" circuits. The circuit normally referred to as "SI Block" is used in a normal shutdown to prevent unneeded ESF actuation from occurring when the plant is being depressurized and cooled down to cold shutdown conditions. The second "block" circuit is referred to as "SI Reset/Disable" and is used during accident conditions to prevent reoccurrence of the SI Sequence. For "SI Reset/Disable" to be successful, the Reactor trip breaker must be opened, however the "SI Block" circuitry does not require any input from the Reactor Trip breakers as shown on Drawing E1635. The only requirement for the operator to accomplish "SI Block" is that Pressurizer pressure be below 2000 psig regardless of other plant conditions.

Record 41 gives conditions where a Reactor Trip breaker has failed to open and then solicits the effect on the plant. Option D, the designated correct answer, provides conditions where "SI Reset/Disable" would be used and gives a description of the effect on "SI Reset/Disable". Option D fails to address the "SI Block" circuit, which would still be able to block an automatic Safety Injection from occurring. This failure to address both "block" circuits means there are no correct answers for this question. Due to this technical error, Record 41 should be deleted from the exam.

George Baldwin
Ph. 920-388-8429
fax 920-388-8340
gbaldwi@wpsr.com

From: "George E Baldwin" <GBALDWI@wpsr.com>
To: <Dlp1@nrc.gov>
Date: Tue, Jan 9, 2001 7:01 AM
Subject: Record 41

Dave

The confusion over the term "block" is due to referring to "SI reset/block" as "SI disabled". The permissive window 1202 for SI reset is labeled "AUTO SI DISABLED" as shown on the attached drawing. Above it is permissive window 1102, which is the window for SI Block and is labeled "PRZR SI BLOCKED". Looking at drawing E1635, both of these lights are shown with the appropriate circuitry. Using the term blocked for disabled would be confusing to the candidates as block has a definite meaning to the operator.

Procedures also show this difference in terminology. Block is used when a shutdown condition is reached, reset is used during IPEOP usage. Attached are examples of this difference.

During low Pressurizer Pressure condition (< 2000 psig) SI can be blocked even with the Reactor trip breakers are closed. Because of the terminology, the candidate would see answer "d" as NOT true because automatic actuation of SI CAN be blocked by the operator regardless of the position of the trip or bypass breakers.

What is true is that:

assuming the operator had manually blocked SI
AND
the respective trip or bypass breaker had failed to open
AND
RCS pressure increased above 2000 psig

THEN;

SI will automatically unblock.

It should be remembered; however, that the operator could still manually block SI by decreasing RCS pressure to <2000 psig and manually positioning the SI block switches to BLOCK.

I will be available this morning to discuss this material.

Due to the attachments, I'm sending this in 2 parts.

George Baldwin
Ph. 920-388-8429
fax 920-388-8340
gbaldwi@wpsr.com

INITIALS

4.2
CONTINUED

> CAUTION
>
> IF Steam Generator pressure reaches 500 psig before SI is blocked, an automatic SI actuation will occur.

10. MAINTAIN Steam Generator pressure ≈600 psig, until SI is blocked. CAS_____

NOTE: IF RCS pressure increases above 2000 psig, Safety Injection System will automatically unblock.

11. WHEN RCS pressure is <2000 psig, BLOCK Automatic Safety Injection per N-RC-36C. _____

12. Prior to RCS pressure at 1800 psig, POSITION Przr Spray Control Master controller to MANUAL per N-RC-36C. _____

13. WHEN RCS pressure is <1000 psig, PERFORM N-SI-33-CL, SI Checklist for <1000psig. _____

14. WHEN RCS pressure is <975 psig and >925 psig, with a bubble in pressurizer, PERFORM following:

    a. SP 33-144, Accum Isol & Check Valve Test _____

    b. SP 34-298, RCS Loop Supply to RHR Pumps, RHR-1A(1B) Leak Check _____

15. WHEN S/G Pressure is <450 psig, COOLDOWN secondary plant using Condensate System per N-MS-06. CAS_____

16. WHEN RCS pressure <1000 psig, DEPRESSURIZE SI Accumulators per N-SI-33. CAS_____

17. Continue RCS Cooldown to <400°F and >350°F indicated on BOTH RCS Hot Legs. _____

CONTINUED

The oversize schematic drawings could not be scanned and are being retained with the hard copy of this document.

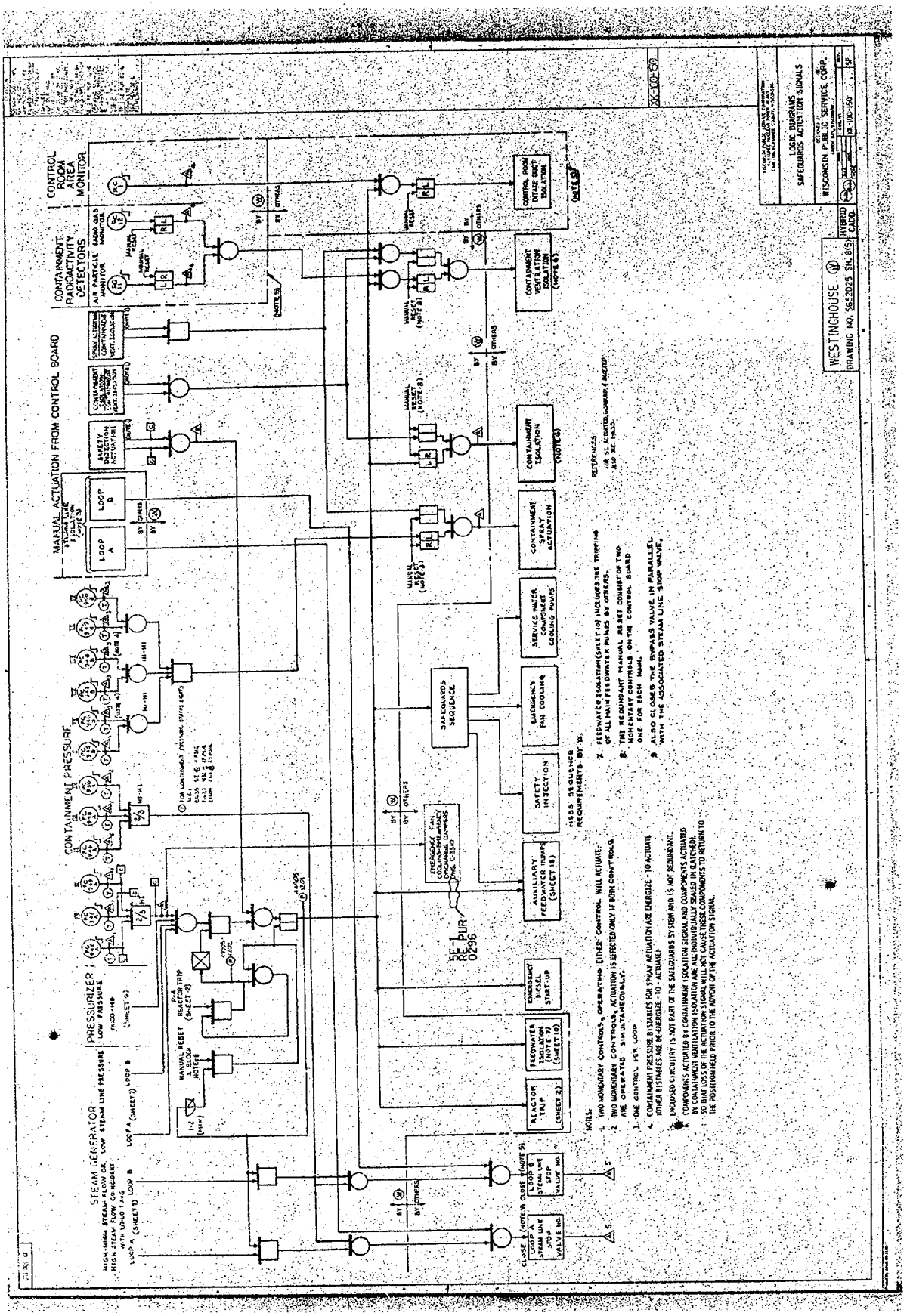
WESTINGHOUSE
DRAWING NO. 5652025 SH. 8(S)
HYBRID CADD
LOOP DIAGRAMS
SAFEGUARDS ACTUATION SIGNALS
WISCONSIN PUBLIC SERVICE CORP.
X-100-150
MANUAL ACTUATION FROM CONTROL BOARD
LOOP A
LOOP B
SAFETY INJECTION ACTUATION
CONTAINMENT PRESSURE
PRESSURIZER
LOW PRESSURE
STEAM GENERATOR
LOW STEAM LINE PRESSURE
CONTAINMENT RADIOACTIVITY DETECTORS
AIR PARTICLE MONITOR
GAS MONITOR
CONTROL ROOM AREA MONITOR
CONTROL ROOM DEFLE DUCT ISOLATION
CONTAINMENT VENTILATION ISOLATION
CONTAINMENT ISOLATION
CONTAINMENT SPRAY ACTUATION
SERVICE WATER COMPONENT COOLING PUMPS
EMERGENCY FAN COOLING
SAFETY INJECTION
AUXILIARY FEEDWATER PUMPS (SHEET 13)
SAFEGUARDS SEQUENCE
EMERGENCY DIESEL START-UP
FEEDWATER ISOLATION (SHEET 7) (SHEET 10)
REACTOR TRIP (SHEET 2)
NOTES:
1. TWO MOMENTARY CONTROLS, OPERATING EITHER CONTROL, WILL ACTUATE.
2. TWO MOMENTARY CONTROLS, ACTUATION IS EFFECTED ONLY IF BOTH CONTROLS ARE OPERATED SIMULTANEOUSLY.
3. ONE CONTROL PER LOOP
4. CONTAINMENT PRESSURE BISTABLES FOR SPRAY ACTUATION ARE ENERGIZE - TO ACTUATE (OTHER BISTABLES ARE DE-ENERGIZE - TO - ACTUATE)
5. ENCLOSED CIRCUITRY IS NOT PART OF THE SAFEGUARDS SYSTEM AND IS NOT REDUNDANT.
6. COMPONENTS ACTUATED BY CONTAINMENT ISOLATION SIGNAL AND COMPONENTS ACTUATED BY CONTAINMENT VENTILATION ISOLATION ARE ALL INDIVIDUALLY SEALED IN (LATCHED). SO THAT LOSS OF THE ACTUATION SIGNAL WILL NOT CAUSE THESE COMPONENTS TO RETURN TO THE POSITION HELD PRIOR TO THE ADVENT OF THE ACTUATION SIGNAL.
7. FEEDWATER ISOLATION (SHEET 10) INCLUDES THE TRIPPING OF ALL MAIN FEEDWATER PUMPS BY OTHERS.
8. THE REDUNDANT MANUAL RESET CONSIST OF TWO MOMENTARY CONTROLS ON THE CONTROL BOARD ONE FOR EACH MAN.
9. ALSO CLOSES THE BYPASS VALVE IN PARALLEL WITH THE ASSOCIATED STEAM LINE STOP VALVE.
REFERENCES:
FOR S1 ACTUATED LOGIC (REACTOR AND SIT FLS.)
HEBB SEQUENCE REQUIREMENTS BY TS.
SE-1 PUR 0296

The oversize schematic drawings could not be scanned and are being retained with the hard copy of this document.

TABLE 7.2-2
PERMISSIVE INTERLOCK CIRCUITS

Number	Function	Required Input
P1	Prevent rod withdrawal on over-power	1/4 high neutron flux (power range); or 1/2 high nuclear flux (intermediate range); or 2/4 over-temperature ΔT; or 2/4 overpower ΔT
P2	Auto-rod withdrawal stop at low power	Low MWe (15% power) load signal (turbine pressure)
P3	(Deleted)	
P4	Actuate turbine trip; closes main feedwater valves on Tavg below setpoint; prevents opening of main feedwater valves which were closed by Safety Injection or high steam generator water level; allows manual block of the automatic reactuation of Safety Injection. Defeats the block of the automatic reactuation of Safety Injection.	Reactor trip Reactor not tripped
P5	Steam dump interlocks	Rapid decrease of MWe load signal (turbine pressure)
P6	Allows manual block of source range trip	1/2 high intermediate range flux allows manual block, 2/2 low intermediate range defeats block
P7	Block various trips at low power	3/4 low-low neutron flux (power range) and 2/2 low MWe load signal (turbine pressure)
P8*	Block single primary loop loss-of-flow trip	3/4 low neutron flux (power range)
P9**		
P10	Allows manual block of power range trip (low setpoint); and allows manual block of intermediate range trip; actuate blocked source range trip	2/4 power range neutron flux allows manual block; 3/4 low neutron flux (power range) defeats manual block of power range and of intermediate range trips

* In this plant, P7 and P8 are set at approximately the same point.

** Not applicable to this plant.

	T	B/P
A	C	C
B	C	

OK

Question

Given the following conditions:

- The Plant is at 100% power
- Reactor trip breaker testing is being performed with Reactor Trip Bypass Breaker B (52/BYB) racked in and closed
- Both Reactor Trip Breakers (52/RTA and 52/RTB) are closed
- Reactor Trip Bypass Breaker A (52/BYB) is open and racked out same

What is the effect on systems operation if Reactor Trip Bypass Breaker B (52/BYB) failed to open on a reactor trip?

a. Only the turbine control valves and intercept valves will close.

b. The Atmospheric Steam Dump valves receive an open signal but do NOT arm. same

c. If RCS Low Tavg occurs, FW-7B/CV-31027 S/G B Main FW Valve does NOT close.

d. Following any SI actuation and reset, automatic actuation of SI Train B CANNOT be blocked. same

Answer d

Exam Level B **Cognitive Level** Comprehension **Facility:** Kewaunee **Exam Date:** 12/11/00

Record Number: 41 **RO Number:** 29 **SRO Number:** 32

Tier: Plant Systems **RO Group:** 2 **SRO Group:** 2

012 Reactor Protection System

K1. Knowledge of the physical connections and/or cause-effect relationships between the Reactor Protection System and the following:

K1.05 ESFAS 3.8 3.9

Explanation of Answer

The Train B P-4 signal (reactor trip) is generated when both RTB and BYB open. Since BYB did NOT open P-4 is NOT generated. This signal inputs to SI Block logic, Feedwater Isolation logic and Turbine Trip logic. In the SI Block logic, a P-4 signal is required to provide a seal-in signal that will block any further SI actuation from a AUTOMATIC SI signal condition (PRZR pressure, Containment pressure, Steamline pressure). A) - Only Train B P-4 inputs to the turbine trip 20/OPC dump which specifically closes the control and intercept valves. However these valves are also crossed trip from Train A P-4 (which is NOT affected) via Auto Oil Stop. Train B P-4 also will close the Stop Valves & Reheat Stop Valves via the 20/ET dump. B) - Steam dumps are not affected by P-4 but do have a "trip" signal input from the turbine trip for shunting steam dump control from the load rejection controller to the turbine trip controller and for arming (supplying air) to the Atmospheric Dump Valves. C) - BOTH trains of P-4 input to both valves (FW-7A/B) to separate solenoid valves. The solenoid valves are in series and operation of either one will vent air from the valve controller and close the valve.

Reference Title	Facility Reference Number	Section	Page	Revision	L. O.
Logic Diagram - Reactor Trip Signals	XK100-144			5C	
Integrated Logic - DG Electric	E-1635			O	

Material Required for Examination

Facility Objective(s)

0470000001K02 - Explain the response to the operation of all Reactor Control & Protection system controls in accordance with Logic Diagrams/Schematics E2042, E2043, E2044, E2051-1, E2051-2, XK100-144...

0490000004K03 - Explain the basic principles of operation for the following major components of the CRD System per System Description 49:1) Rod Drive MG Sets2) Reactor Trip and Bypass Breakers

Question Source: NRC Exam Bank **Question Modification Method:** Significantly Modified

Question Source Comments: Watts Bar 2/96 NRC Exam. Changed several selections to plant specific P-4 input.

Source Question

Facility Watts Bar

Exam Date 2/26/96

Question Given the following:

- The Unit is at 100% power.
- Reactor Protection System (RPS) surveillance is in progress.
- Train "B" reactor trip breaker is OPEN.
- Train "B" bypass breaker is CLOSED.
- Train "A" reactor trip breaker is CLOSED.
- Train "A" bypass breaker is OPEN.

WHICH ONE (1) of the following is the system response following a spurious reactor trip signal and Bypass Breaker Train "B" fails to open?

a. All Main Feedwater Isolation valves will close.

b. The Turbine Generator remains on line and must be manually tripped.

c. If an SI occurs and the SI signal is RESET, "B" train automatic SI would NOT be blocked.

d. Steam dumps receive an open signal, but do NOT arm.

Answer c. [+1.0]

KA 012000K105 3.8 3.9

References 3-OT-SYS063A, p. 42, LO 26.
KA 012000K105 (3.8/3.9)

The oversize schematic drawings could not be scanned and are being retained with the hard copy of this document.

ENCLOSURE 2

RECORD # 43

RO # 31

SR0 # N/A

ANY SI
will start AF

However - is there a diff condition
for Reassurance. - they state only
MDAFW starts on SI? was this
verified?

Question

Which of the following conditions will require a manual start of the Turbine Driven Auxiliary Feedwater Pump if the automatic start fails?

a. Train B SI actuation.

b. Trip of both Main Feedwater Pumps at 60% power.

c. Lockout of the RAT coincident with a turbine trip at 100% power.

d. Steam Generator A level at 10% NR and Steam Generator B level at 70%.

Answer C

Exam Level R **Cognitive Level** Comprehension **Facility:** Kewaunee **Exam Date:** 12/11/00

Record Number: 43 **RO Number:** 31 **SRO Number:**

Tier: Plant Systems **RO Group:** 1 **SRO Group:** 1 **Date:**

013 Engineered Safety Features Actuation System (ESFAS)

A1. Ability to predict and/or monitor changes in parameters associated with operating the ESFAS controls including:

A1.04 S/G level 3.4 3.6

Explanation of Answer

TDAFW Pump starts include 1) low low level in both S/Gs (17%), 2) AMSAC low low in level (14%, 3/4 sensors equally divided between S/Gs), 3) Bus 1 AND Bus 2 undervoltage. The loss of the RAT with loss of MAT on the trip, results in loss of power to these buses. A) - SI sequence will start the MDAFW Pumps only - in this case the B Pump starts. B) - Trip of both feedwater pumps starts only the MDAFW Pumps. D) - S/G levels result in two automatic actions - 1) Low Low level in S/G A results in start of the MDAFW Pumps and 2) the Hi HI level in S/G A results in feedwater isolation (plus main FW pumps trip & turbine trip). Both conditions affect MDAFW Pumps only.

Reference Title	Facility Reference Number	Section	Page	Revision	L. O.
Integrated Logic Diagram Auxiliary Feedwater System	E-1602			AW	

Material Required for Examination

Facility Objective(s)

05B0000001K02 - Explain the response to the operation of All Auxiliary Feedwater System Controls in accordance with logic diagrams/schematics: E1602, E2802, XK100-149, XK100-157.

Contributor to Core Damage Sequence: Loss of AC Bus – 2%; PRA SYSTEM Importance: TD AFW – 9

Question Source: **Previous 2 NRC Exams** **Question Modification Method:** Editorially Modified

Question Source Comments: Q # 067 on 12/97 NRC exam (Bank question 05BADV003). Modified 2 selections which changed correct answer.

Record # 43

RO # 31

SRO # N/A

Comment:
The applicants' stated, during the post examination review, that answer b. was also correct,based upon the fact that the trip of both Main Feedwater Pumps at 60% power would cause a Turbine Trip. The Turbine Trip would cause a Reactor Trip and the post-trip response of Steam Generator NR level would decrease to less than the 17% Lo-Lo Level setpoint in both Steam Generators. The 2/3 Lo-Lo Levels in both Steam Generators provides another start signal to the Turbine Driven Auxiliary Feedwater Pump. The licensee agrees with the applicants' comment and recommend that answer b. also be accepted as a correct response.

The applicants' case can be further solidified by reviewing references three and four listed below. The licensee also performed a simulation using conditions given in selection b. The result was an Auto start of the TD AFW Pump in 21 seconds.

References:

1. Integrated Logic Diagram E-1624 Feedwater System.

2. Logic Diagram Reactor Trip Signals XK 100-144.

3. Post Trip Review Package from Plant Trip from 25% power on April 12,1988

4. Post Trip Review Package from Plant Trip from 70% power on April 24,1986

Question

Which of the following conditions will require a manual start of the Turbine Driven Auxiliary Feedwater Pump if the automatic start fails?

a. Train B SI actuation.

b. Trip of both Main Feedwater Pumps at 60% power.

c. Lockout of the RAT coincident with a turbine trip at 100% power.

d. Steam Generator A level at 10% NR and Steam Generator B level at 70%.

Answer C

Exam Level R **Cognitive Level** Comprehension **Facility:** Kewaunee **Exam Date:** 12/11/00

Record Number: 43 **RO Number:** 31 **SRO Number:**

Tier: Plant Systems **RO Group:** 1 **SRO Group:** 1 **Date:**

013 Engineered Safety Features Actuation System (ESFAS)

A1. Ability to predict and/or monitor changes in parameters associated with operating the ESFAS controls including:

A1.04 S/G level 3.4 3.6

Explanation of Answer

TDAFW Pump starts include 1) low low level in both S/Gs (17%), 2) AMSAC low low in level (14%, 3/4 sensors equally divided between S/Gs), 3) Bus 1 AND Bus 2 undervoltage. The loss of the RAT with loss of MAT on the trip, results in loss of power to these buses. A) - SI sequence will start the MDAFW Pumps only - in this case the B Pump starts. B) - Trip of both feedwater pumps starts only the MDAFW Pumps. D) - S/G levels result in two automatic actions - 1) Low Low level in S/G A results in start of the MDAFW Pumps and 2) the Hi HI level in S/G A results in feedwater isolation (plus main FW pumps trip & turbine trip). Both conditions affect MDAFW Pumps only.

Reference Title	Facility Reference Number	Section	Page	Revision	L. O.
Integrated Logic Diagram Auxiliary Feedwater System	E-1602			AW	

Material Required for Examination

Facility Objective(s)

05B0000001K02 - Explain the response to the operation of All Auxiliary Feedwater System Controls in accordance with logic diagrams/schematics: E1602, E2802, XK100-149, XK100-157.

Contributor to Core Damage Sequence: Loss of AC Bus – 2%; PRA SYSTEM Importance: TD AFW – 9

Question Source: **Previous 2 NRC Exams** **Question Modification Method:** Editorially Modified

Question Source Comments: Q # 067 on 12/97 NRC exam (Bank question 05BADV003). Modified 2 selections which changed correct answer.

ENCLOSURE 3

RECORD # 84

RO # 68

SR0 # 61

Based on the conditions in the given question — no correct answer — it would have been NO entry — due to Temp > 375°F

Question

Given the following conditions:

- A LOCA has occurred
- RCS pressure is 125 psig
- RCS Core Exit TCs read 380°F
- SI Pump A is running providing 325 gpm flow
- RHR Pump A is running providing 1150 gpm flow

What is the appropriate action taken in response to the above conditions?

Entry into FR-P.1 "Response to Pressurized Thermal Shock Condition" is...

a. NOT required since RCS pressure is below 350 psig.

b. made but NO actions are implemented before returning to procedure in effect.

c. made and a RCS temperature soak for a ONE hour period will be completed.

d. made and cooldown will continue within a limit of 50°F in any 60 minute period.

Answer b
Exam Level B **Cognitive Level** Comprehension **Facility:**Kewaunee **Exam Date:** 12/11/00
Record Number: 84 **RO Number:** 68 **SRO Number:** 61

Tier: Emergency and Abnormal Plant Evolutions **RO Group:** 2 **SRO Group:** 1
011 Large Break LOCA
EK3. Knowledge of the reasons for the following responses as they apply to the Large Break LOCA:
EK3.10 PTS limits on RCS pressure and temperature 3.7 3.9

Explanation of Answer

The transition is required on a RED Path condition. The first step of the procedure checks if implementation is required. Since RCS pressure is less than RHR pump shutoff head and flow from the pump(s) exists, a large break LOCA is indicated. PTS is NOT a serious concern for a LBLOCA, so the operator is directed to return to the procedure and step in effect. A) - Entry into FR-P.1 is required. 350 psig is selected as typical limit for low pressure condition in operations (RHR). C) - If RCS pressure was > 150 psig this would be the action taken since it is likely that RCS Cold leg temperatures have dropped > 100°F within the last hour (This is the condition leading to the RED Path). D) - The 50°F per hour limit is applied to cooldown following the ONE hour RCS temperature soak.

Reference TitleFacility Reference Number	Section	Page	Revision	L. O.
Response to Pressurized Thermal Shock Condition	FR-P.1	Step 1 (RNO)	2	N
PLANT SPECIFIC BACKGROUND INFORMATION FOR KNPP IPEOP FR-P.1	FR-P.1	4. Step 1	9B-9C	K

Material Required for Examination

Facility Objective(s)

FRP0010501K04 - GIVEN AN IMMINENT PRESSURIZED THERMAL SHOCK CONDITION, EXPLAIN THE BASIS FOR ACTIONS TAKEN, PER FR-P.1 BACKGROUND DOCUMENT.

FRP0010501K05 - IDENTIFY the conditions which would require a procedural transition, while responding to an IMMINENT PRESSURIZED THERMAL SHOCK CONDITION, IN ACCORDANCE WITH FR-P.1.

Contributor to Core Damage Sequence: Large LOCA – 9%

Question Source: New **Question Modification Method:**
Question Source Comments:

Comment: Due to a tracking error, an older version (see previous page) of RO question 68 and SRO question 61 was placed on the exam instead of the approved version (see next page) of the same question. The information (bolded and underlined) added during the review process was necessary to provide a clear solicitation of the desired answer. Due to the loss of this important information, no correct option was solicited or available to select. Due to this tracking error, this question should be deleted from the exam.

Question

Given the following conditions:

- A LOCA had occurred **from HOT SHUTDOWN conditions 30 minutes ago**
- RCS pressure is 125 psig
- RCS Core Exit TCs read 380°F
- **RCS Cold Leg temperatures are both 250°F**
- SI Pump A is running providing 325 gpm flow
- RHR Pump A is running providing 1150 gpm flow

What is the appropriate action taken in response to the above conditions?

Entry into FR-P.1 "Response to Pressurized Thermal Shock Condition" is...

a. NOT required since RCS pressure is below 350 psig.

b. made but NO actions are implemented before returning to procedure in effect.

c. made and a RCS temperature soak for a ONE hour period will be completed.

d. made and cooldown will continue within a limit of 50°F in any 60 minute period.

Answer b

Exam Level B **Cognitive Level** Comprehension **Facility:** Kewaunee **Exam Date:** 12/11/00

Record Number: 84 **RO Number:** 68 **SRO Number:** 61

Tier: Emergency and Abnormal Plant Evolutions **RO Group:** 2 **SRO Group:** 1

011 Large Break LOCA

EK3. Knowledge of the reasons for the following responses as they apply to the Large Break LOCA:

EK3.10 PTS limits on RCS pressure and temperature 3.7 3.9

Explanation of Answer

The transition is required on a RED Path condition. The first step of the procedure checks if implementation is required. Since RCS pressure is less than RHR pump shutoff head and flow from the pump(s) exists, a large break LOCA is indicated. PTS is NOT a serious concern for a LBLOCA, so the operator is directed to return to the procedure and step in effect. A) - Entry into FR-P.1 is required. 350 psig is selected as typical limit for low pressure condition in operations (RHR). C) - If RCS pressure was > 150 psig this would be the action taken since it is likely that RCS Cold leg temperatures have dropped > 100°F within the last hour (This is the condition leading to the RED Path). D) - The 50°F per hour limit is applied to cooldown following the ONE hour RCS temperature soak.

Reference TitleFacility Reference Number	Section	Page	Revision	L. O.
Response to Pressurized Thermal Shock Condition	FR-P.1	Step 1 (RNO)	2	N
PLANT SPECIFIC BACKGROUND INFORMATION FOR KNPP IPEOP FR-P.1	FR-P.1	4. Step 1	9B-9C	K

Material Required for Examination

Facility Objective(s)

FRP0010501K04 - GIVEN AN IMMINENT PRESSURIZED THERMAL SHOCK CONDITION, EXPLAIN THE BASIS FOR ACTIONS TAKEN, PER FR-P.1 BACKGROUND DOCUMENT.

FRP0010501K05 - IDENTIFY the conditions which would require a procedural transition, while responding to an IMMINENT PRESSURIZED THERMAL SHOCK CONDITION, IN ACCORDANCE WITH FR-P.1.

Contributor to Core Damage Sequence: Large LOCA – 9%

Question Source: New **Question Modification Method:**

Question Source Comments:

Question

Given the following conditions: 353°F RCS COLD LEG TEMPS

- A LOCA has occurred
- RCS pressure is 125 psig
- RCS Core Exit TCs read 380°F
- SI Pump A is running providing 325 gpm flow
- RHR Pump A is running providing 1150 gpm flow

What is the appropriate action taken in response to the above conditions?

Entry into FR-P.1 "Response to Pressurized Thermal Shock Condition" is...

SINCE PLANT ISOLATED DEPRESS.

a. NOT required since RCS pressure is below 350 psig.

b. made but NO actions are implemented before returning to procedure in effect.

c. made and a RCS temperature soak for a ONE hour period will be completed.

d. made and cooldown will continue within a limit of 50°F in any 60 minute period.

Answer b

Exam Level B **Cognitive Level** Comprehension **Facility:** Kewaunee **Exam Date:** 12/11/00

Record Number: 84 **RO Number:** 68 **SRO Number:** 61

Tier: Emergency and Abnormal Plant Evolutions **RO Group:** 2 **SRO Group:** 1

011 Large Break LOCA

EK3. Knowledge of the reasons for the following responses as they apply to the Large Break LOCA:

EK3.10 PTS limits on RCS pressure and temperature 3.7 3.9

Explanation of Answer

The transition is required on a RED Path condition. The first step of the procedure checks if implementation is required. Since RCS pressure is less than RHR pump shutoff head and flow from the pump(s) exists, a large break LOCA is indicated. PTS is NOT a serious concern for a LBLOCA, so the operator is directed to return to the procedure and step in effect. A) - Entry into FR-P.1 is required. 350 psig is selected as typical limit for low pressure condition in operations (RHR). C) - If RCS pressure was > 150 psig this would be the action taken since it is likely that RCS Cold leg temperatures have dropped > 100°F within the last hour (This is the condition leading to the RED Path). D) - The 50°F per hour limit is applied to cooldown following the ONE hour RCS temperature soak.

Reference Title	Facility Reference Number	Section	Page	Revision	L. O.
Response to Pressurized Thermal Shock Condition	FR-P.1	Step 1 (RNO)	2	N	
PLANT SPECIFIC BACKGROUND INFORMATION FOR KNPP IPEOP FR-P.1	FR-P.1	4. Step 1	9B-9C	K	

Material Required for Examination

Facility Objective(s)

FRP0010501K04 - GIVEN AN IMMINENT PRESSURIZED THERMAL SHOCK CONDITION, EXPLAIN THE BASIS FOR ACTIONS TAKEN, PER FR-P.1 BACKGROUND DOCUMENT.

FRP0010501K05 - IDENTIFY the conditions which would require a procedural transition, while responding to an IMMINENT PRESSURIZED THERMAL SHOCK CONDITION, IN ACCORDANCE WITH FR-P.1.

Contributor to Core Damage Sequence: Large LOCA – 9%

Question Source: New **Question Modification Method:**

Question Source Comments:

WISCONSIN PUBLIC SERVICE CORPORATION	NO. F-0.4	REV D
KEWAUNEE NUCLEAR POWER PLANT	TITLE INTEGRITY	
EMERGENCY OPERATING PROCEDURES	DATE MAY 1 1991	PAGE 1 of 1
REVIEWED BY D. Braun	APPROVED BY M L Marchio	

NUCLEAR SAFETY RELATED	PORC REVIEW REQUIRED	SRO APPROVAL OF TEMPORARY CHANGES REQUIRED
☒ YES ☐ NO	☒ YES ☐ NO	☒ YES ☐ NO

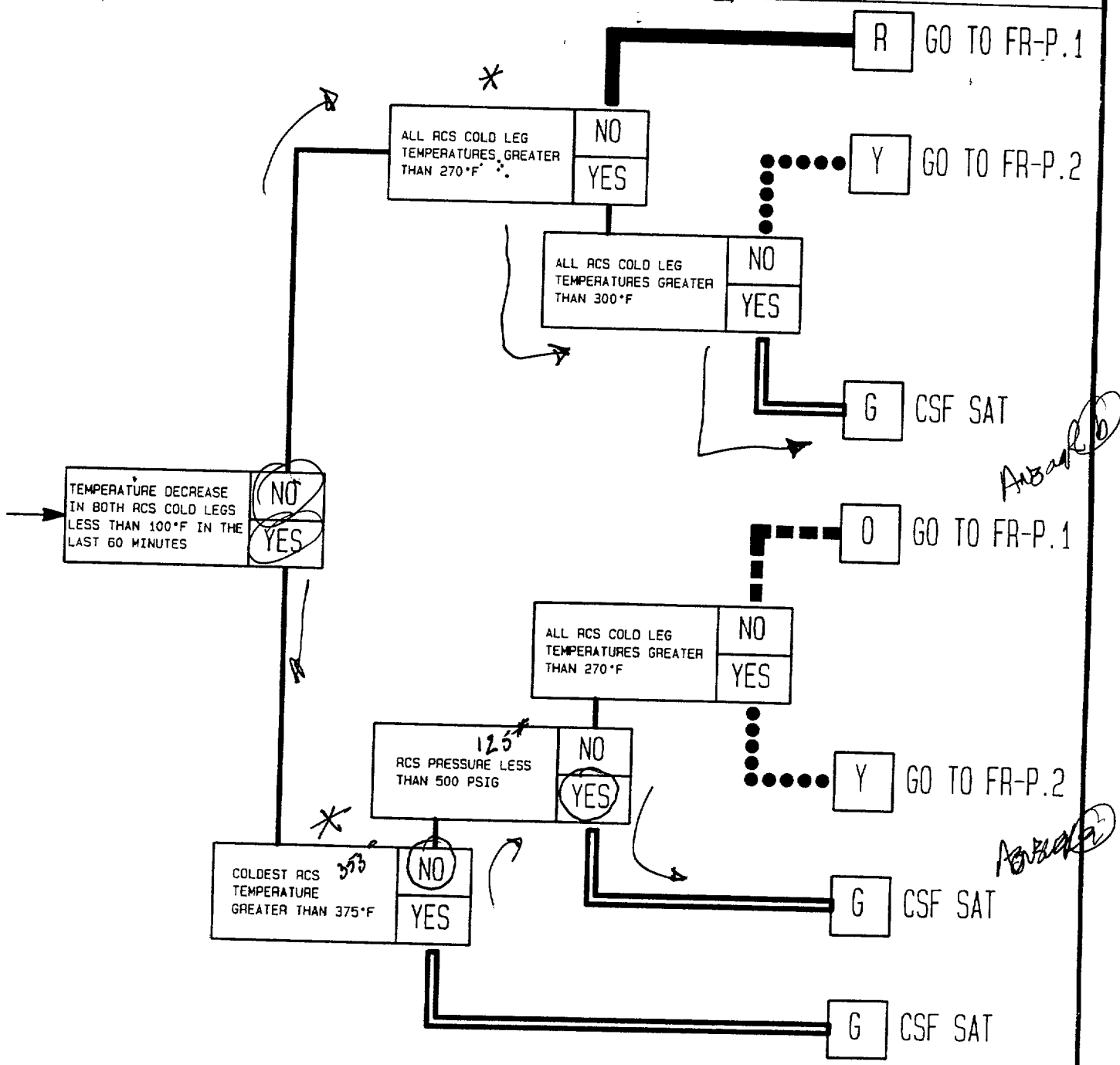

Question

Given the following conditions:

LBLOCA.

- A LOCA has occurred
- RCS pressure is 125 psig
- RCS Core Exit TCs read 380°F
- SI Pump A is running providing 325 gpm flow
- RHR Pump A is running providing 1150 gpm flow

* WHAT "RED" CAUSES RED PATH ON PTS?

What is the appropriate action taken in response to the above conditions?

Entry into FR-P.1 "Response to Pressurized Thermal Shock Condition" is...

a. NOT required since RCS pressure is below 350 psig.

b. made but NO actions are implemented before returning to procedure in effect.

c. made and a RCS temperature soak for a ONE hour period will be completed.

d. made and cooldown will continue within a limit of 50°F in any 60 minute period.

Answer b

Exam Level B **Cognitive Level** Comprehension **Facility:** Kewaunee **Exam Date:** 12/11/00

Record Number: 84 **RO Number:** 68 **SRO Number:** 61

Tier: Emergency and Abnormal Plant Evolutions **RO Group:** 2 **SRO Group:** 1

011 Large Break LOCA

EK3. Knowledge of the reasons for the following responses as they apply to the Large Break LOCA:

EK3.10 PTS limits on RCS pressure and temperature 3.7 3.9

Explanation of Answer

The transition is required on a RED Path condition. The first step of the procedure checks if implementation is required. Since RCS pressure is less than RHR pump shutoff head and flow from the pump(s) exists, a large break LOCA is indicated. PTS is NOT a serious concern for a LBLOCA, so the operator is directed to return to the procedure and step in effect. A) - Entry into FR-P.1 is required. 350 psig is selected as typical limit for low pressure condition in operations (RHR). C) - If RCS pressure was > 150 psig this would be the action taken since it is likely that RCS Cold leg temperatures have dropped > 100°F within the last hour (This is the condition leading to the RED Path). D) - The 50°F per hour limit is applied to cooldown following the ONE hour RCS temperature soak.

Reference Title	Facility Reference Number	Section	Page	Revision	L. O.
Response to Pressurized Thermal Shock Condition	FR-P.1	Step 1 (RNO)	2	N	
PLANT SPECIFIC BACKGROUND INFORMATION FOR KNPP IPEOP FR-P.1	FR-P.1	4. Step 1	9B-9C	K	

Material Required for Examination

Facility Objective(s)

FRP0010501K04 - GIVEN AN IMMINENT PRESSURIZED THERMAL SHOCK CONDITION, EXPLAIN THE BASIS FOR ACTIONS TAKEN, PER FR-P.1 BACKGROUND DOCUMENT.

FRP0010501K05 - IDENTIFY the conditions which would require a procedural transition, while responding to an IMMINENT PRESSURIZED THERMAL SHOCK CONDITION, IN ACCORDANCE WITH FR-P.1.

Contributor to Core Damage Sequence: Large LOCA – 9%

Question Source: New **Question Modification Method:**

Question Source Comments:

STEP	OPERATOR ACTIONS	CONTINGENCY ACTIONS

4.0 DETAILED PROCEDURE

****

CAUTION

Use of Service Water sources for AFW Pumps will be necessary if CST level decreases to less than 4%.

****

1	Check If Procedure FR-P.1 Implementation Is Required:	
	a. RCS pressure - GREATER THAN 150 PSIG	a. IF each RHR injection flow, FI-626 and FI-928, greater than 375 gpm, THEN return to procedure and step in effect.
	b. GO TO Step 2. OBSERVE CAUTION PRIOR TO STEP 2.	

STEP: Check If Procedure FR-P.1 Implementation Is Required:

PURPOSE: To determine if the entry into FR-P.1 was due to a large-break LOCA

BASIS:

For transients where RCS pressure is less than the RHR pump shutoff head and flow from the RHR pumps has been verified, the operator should return to the guideline and step in effect since these symptoms are indicative of a large-break LOCA. In this instance, the actions in FR-P.1 should not be performed since pressurized thermal shock is not a serious concern for a large-break LOCA.

A large-break LOCA will depressurize the RCS to containment pressure in a matter of minutes. RCPs will be tripped due to low pressure and natural circulation will stop as fluid levels in the SG tubes drop below the U-bends. A safety injection signal will be actuated by low pressurizer pressure. Large volumes of water will be injected into the loop cold legs, leading directly to the severe cooling of the vessel downcomer. Most of the water will come from the RWST. Another source of water injected into the cold legs comes from pressurized accumulators located inside containment. This relatively cold safety injection water produces significant thermal shock in the downcomer region, but for the large-break LOCA, pressure is not a concern. Most of the water initially in the RCS, and most of the colder water added by injection, will flow out the break. This break flow mixes together in the containment sump to result in a somewhat higher temperature for the sump water than that purely from injection. During the recirculation phase of recovery, this warmer fluid is pumped back into the RCS, somewhat offsetting the initial thermal shock.

As discussed in the Pressurized Thermal Shock (PTS) Training Program documentation, temperature stress alone is normally not sufficient to threaten the integrity of the pressure vessel. The PTS scenario also assumes that the RCS is pressurized and a critical flaw which is the correct size, shape, and orientation exists at the inner surface of the vessel wall. In addition, the warm prestressing effect, which results in an apparent increase in fracture toughness of the vessel material, is applicable to this situation since repressurization of the RCS is virtually impossible following a large-break LOCA. Any material flaw would be prevented from reinitiating and growing beyond 75% of the vessel wall thickness. Therefore, for a large-break LOCA, PTS is not a serious concern and guideline FR-P.1 ~~does not need to be implemented.~~

ACTIONS:

- Determine if RCS pressure is greater than 150 psig
- Determine if RHR flow is greater that 375 gpm from each flow path
- Return to guideline and step in effect

INSTRUMENTATION:

- RCS pressure indication
- RHR flow indication

CONTROLS/EQUIPMENT:

N/A

KNOWLEDGE:

In the event that a component/instrument failure prevents the operator from verifing required RHR flow from each train, the intent of this step is to verify that a large break LOCA has occurred (see BASIS).

NRC-01-002

NMC
Committed to Nuclear Excellence

Kewaunee Nuclear Power Plant
N490, State Highway 42
Kewaunee, WI 54216-9511
920-388-2560

Operated by
Nuclear Management Company, LLC

January 9, 2001

Mr. David Pelton
U.S. Nuclear Regulatory Commission, Region III
801 Warrenville Road
Lisle, IL 60532-4351

Dear Mr. Pelton:

Docket 50-305
Operating License DPR-43
Kewaunee Nuclear Power Plant
Licensing Examinations

As a result of recent communications you have had with George Baldwin of our staff, it has come to our attention that additional information supporting our previously submitted comment on written RO question #29, SRO question #32 (record #41), which was on the written examination administered at Kewaunee on Monday, December 11, 2000, is needed.

We are requesting that you consider this additional information we have enclosed in this regard. Thank you.

Respectfully,

Kyle A. Hoops
Manager – Kewaunee Plant

JJB/let

cc – U.S. NRC Resident Inspector, w/o Enc.
U.S. NRC, Document Control Desk, w/o Enc.
J.J. Brown, KNPP, w/Enc.

From: George E Baldwin
To: Dlp1@nrc.gov
Date: 1/9/01 6:58AM
Subject: Record 41

Dave

The confusion over the term "block" is due to referring to "SI reset/block" as "SI disabled". The permissive window 1202 for SI reset is labeled "AUTO SI DISABLED" as shown on the attached drawing. Above it is permissive window 1102, which is the window for SI Block and is labeled "PRZR SI BLOCKED". Looking at drawing E1635, both of these lights are shown with the appropriate circuitry. Using the term blocked for disabled would be confusing to the candidates as block has a definite meaning to the operator.

Procedures also show this difference in terminology. Block is used when a shutdown condition is reached, reset is used during IPEOP usage. Attached are examples of this difference.

During low Pressurizer Pressure condition (< 2000 psig) SI can be blocked even with the Reactor trip breakers are closed. Because of the terminology, the candidate would see answer "d" as NOT true because automatic actuation of SI CAN be blocked by the operator regardless of the position of the trip or bypass breakers.

What is true is that:

assuming the operator had manually blocked SI
AND
the respective trip or bypass breaker had failed to open
AND
RCS pressure increased above 2000 psig

THEN;

SI will automatically unblock.

It should be remembered; however, that the operator could still manually block SI by decreasing RCS pressure to <2000 psig and manually positioning the SI block switches to BLOCK.

I will be available this morning to discuss this material.

Due to the attachments, I'm sending this in 2 parts.

George Baldwin
Ph. 920-388-8429
fax 920-388-8340
gbaldwi@wpsr.com

INITIALS

4.2
CONTINUED

CAUTION

IF Steam Generator pressure reaches 500 psig before SI is blocked, an automatic SI actuation will occur.

10. MAINTAIN Steam Generator pressure ≈600 psig, until SI is blocked. CAS_____

NOTE: IF RCS pressure increases above 2000 psig, Safety Injection System will automatically unblock.

11. WHEN RCS pressure is <2000 psig, BLOCK Automatic Safety Injection per N-RC-36C. _____

12. Prior to RCS pressure at 1800 psig, POSITION Przr Spray Control Master controller to MANUAL per N-RC-36C. _____

13. WHEN RCS pressure is <1000 psig, PERFORM N-SI-33-CL, SI Checklist for <1000psig. _____

14. WHEN RCS pressure is <975 psig and >925 psig, with a bubble in pressurizer, PERFORM following:

    a. SP 33-144, Accum Isol & Check Valve Test _____

    b. SP 34-298, RCS Loop Supply to RHR Pumps, RHR-1A(1B) Leak Check _____

15. WHEN S/G Pressure is <450 psig, COOLDOWN secondary plant using Condensate System per N-MS-06. CAS_____

16. WHEN RCS pressure <1000 psig, DEPRESSURIZE SI Accumulators per N-SI-33. CAS_____

17. Continue RCS Cooldown to <400°F and >350°F indicated on BOTH RCS Hot Legs. _____

CONTINUED

4.4 Pressure Control During Cooldown:

NOTE: Hold Steam Generator pressure at 600 psig until SI can be blocked at 2000 psig in RCS.

NOTE: Difference in temperature between Przr and RCS shall NOT exceed 320°F.

1. DECREASE Przr pressure by REDUCING Przr Spray Master Controller setpoint.

   a. Maintain RCS pressure within limitations of RD-11.1.

2. WHEN RCS pressure is <2000 psig, PERFORM following to block safety injection:

   a. VERIFY permissive status light 44905 1101, Pressurizer Perm Block SI, ON.

   b. POSITION Safety Injection Train A and Train B Block/Unblock switches to BLK.

   c. VERIFY permissive status light, 44905 1102, Pressurizer SI Blocked, ON.

NOTE: Automatic actuation of Przr PORV PR-2A, Przr Spray Valves, Przr Heaters, and annunciator PRESSURIZER CONTROL PRESS ABNORMAL (47043-C), is controlled by Master Controller output. Misadjustment of controller setpoint dial, manual controller operation, manual back-up heater operation, or high controller reset, will affect actuation points of above components.

3. At 1800 psig,position Przr Spray Control Master controller to manual:

   a. POSITION AUTO-BAL-MAN switch to AUTO-BAL.

   b. ADJUST the manual potentiometer until the deviation meter nulls. (top meter)

   c. POSITION AUTO-BAL-MAN switch to MAN.

   d. Control Przr pressure by ADJUSTING the manual potentiometer to INCR or DECR to maintain required RCS pressure.

   e. VERIFY pressurizer spray valves and heater control working properly in response to manual control.

4. WHEN Przr and Reactor Coolant Loop boron concentration is equalized, MINIMIZE number of Przr heaters in operation.

5. WHEN RCS pressure ≤425 psig and hottest RCS wide range hot leg temperature is <400°F, GO TO N-RHR-34.

STEP	OPERATOR ACTIONS	CONTINGENCY ACTIONS

****

CAUTION

If any Pressurizer PORV opens because of high RCS pressure, verify PORV closed per Step 6.b after pressure drops below PORV setpoint.

****

6	Check Pressurizer PORVs And Block Valves:	
	a. Power to PR-1A and B, Pressurizer PORV Block Valves - AVAILABLE	a. Restore power to PR-1A(B), at MCC-52B(62B).
	b. PORVs - CLOSED	b. IF PRZR pressure less than 2315 psig, THEN manually close PORVs. IF any valve can NOT be closed, THEN manually close its Block Valve.
	c. Block Valves - AT LEAST ONE OPEN	c. Open one Block Valve unless it was closed to isolate a faulty PORV.
7	Isolate Letdown:	
	a. Place control switches for LD-4A, B, and C, Letdown Orifice Isolation Valves, to CLOSE	

****

CAUTION

If offsite power is lost after SI reset, manual action may be required to restart safeguards equipment.

****

8	Reset SI	

STATUS LIGHTS

CONTROL STATUS
44904

0101 LOOP A CHAN 2 OTΔT	0102 LOOP B CHAN 1 OTΔT
0201 LOOP A CHAN 4 OTΔT	0202 LOOP B CHAN 3 OTΔT
0301	0302
0401 LOOP A CHAN 2 OPΔT	0402 LOOP B CHAN 1 OPΔT
0501 LOOP A CHAN 4 OPΔT	0502 LOOP B CHAN 3 OPΔT
0601	0602
0701	0702
0801 CDSR DMP VLV MODULATE	0802 CDSR DMP VLV TRIP OPEN
0901	0902
1001 ATMOS DMP VLV MODULATE	1002 ATMOS DMP VLV TRIP OPEN
1101	1102
1201	1202

PERMISSIVE STATUS
44905

0101 SR PERM P-6	0102 SR BLOCKED
0201 PR PERM P-10	0202 IR BLOCKED
0301 CDSR AVAIL DMP PERM	0302 PR LOW SETPT BLOCKED
0401	0402
0501 AT POWER PERM P-7	0502 LOW FLOW TRIP BLOCK P-8
0601	0602 AUTO ROD WDL BLOCK P-2
0701 OTΔT RDSTP & TURB RNBACK	0702 OPΔT RDSTP & TURB RNBACK
0801 LOAD LOSS 10 PCT RATE	0802 LOAD LOSS 60 PCT RATE
0901 LO-LO TAVG STM DMP INTLK	0902
1001	1002
1101 PRZR PERM BLOCK SI	1102 PRZR SI BLOCKED
1201 SI SIGNAL ACTUATED	1202 AUTO SI DISABLED

BYPASS STATUS
44906

0101 N31 SR TRIP BYPASSED	0102 N32 SR TRIP BYPASSED
0201	0202
0301 N35 IR TRIP BYPASSED	0302 N36 IR TRIP BYPASSED
0401	0402
0501 N41 ROD STOP BYPASSED	0502 N42 ROD STOP BYPASSED
0601 N43 ROD STOP BYPASSED	0602 N44 ROD STOP BYPASSED
0701	0702
0801 STM DMP INTLK BYPASSED	0802
0901	0902
1001	1002
1101	1102
1201	1202

From: George E Baldwin
To: Dlp1@nrc.gov
Date: 1/9/01 10:05AM
Subject: record 41 technical error

In the ESF circuitry there are two (2) "block" circuits. The circuit normally referred to as "SI Block" is used in a normal shutdown to prevent unneeded ESF actuation from occurring when the plant is being depressurized and cooled down to cold shutdown conditions. The second "block" circuit is referred to as "SI Reset/Disable" and is used during accident conditions to prevent reoccurrence of the SI Sequence. For "SI Reset/Disable" to be successful, the Reactor trip breaker must be opened, however the "SI Block" circuitry does not require any input from the Reactor Trip breakers as shown on Drawing E1635. The only requirement for the operator to accomplish "SI Block" is that Pressurizer pressure be below 2000 psig regardless of other plant conditions.

Record 41 gives conditions where a Reactor Trip breaker has failed to open and then solicits the effect on the plant. Option D, the designated correct answer, provides conditions where "SI Reset/Disable" would be used and gives a description of the effect on "SI Reset/Disable". Option D fails to address the "SI Block" circuit, which would still be able to block an automatic Safety Injection from occurring. This failure to address both "block" circuits means there are no correct answers for this question. Due to this technical error, Record 41 should be deleted from the exam.

George Baldwin
Ph. 920-388-8429
fax 920-388-8340
gbaldwi@wpsr.com

STATUS LIGHTS

CONTROL STATUS 44904		PERMISSIVE STATUS 44905		BYPASS STATUS 44906	
0101 LOOP A CHAN 2 OTΔT	0102 LOOP B CHAN 1 OTΔT	0101 SR PERM P-6	0102 SR BLOCKED	0101 N31 SR TRIP BYPASSED	0102 N32 SR TRIP BYPASSED
0201 LOOP A CHAN 4 OTΔT	0202 LOOP B CHAN 3 OTΔT	0201 PR PERM P-10	0202 IR BLOCKED	0201	0202
0301	0302	0301 CDSR AVAIL DMP PERM	0302 PR LOW SETPT BLOCKED	0301 N35 IR TRIP BYPASSED	0302 N36 IR TRIP BYPASSED
0401 LOOP A CHAN 2 OPΔT	0402 LOOP B CHAN 1 OPΔT	0401	0402	0401	0402
0501 LOOP A CHAN 4 OPΔT	0502 LOOP B CHAN 3 OPΔT	0501 AT POWER PERM P-7	0502 LOW FLOW TRIP BLOCK P-8	0501 N41 ROD STOP BYPASSED	0502 N42 ROD STOP BYPASSED
0601	0602	0601	0602 AUTO ROD WDL BLOCK P-2	0601 N43 ROD STOP BYPASSED	0602 N44 ROD STOP BYPASSED
0701	0702	0701 OTΔT RDSTP & TURB RNBACK	0702 OPΔT RDSTP & TURB RNBACK	0701	0702
0801 CDSR DMP VLV MODULATE	0802 CDSR DMP VLV TRIP OPEN	0801 LOAD LOSS 10 PCT RATE	0802 LOAD LOSS 60 PCT RATE	0801 STM DMP INTLK BYPASSED	0802
0901	0902	0901 LO-LO TAVG STM DMP INTLK	0902	0901	0902
1001 ATMOS DMP VLV MODULATE	1002 ATMOS DMP VLV TRIP OPEN	1001	1002	1001	1002
1101	1102	1101 PRZR PERM BLOCK SI	1102 PRZR SI BLOCKED	1101	1102
1201	1202	1201 SI SIGNAL ACTUATED	1202 AUTO SI DISABLED	1201	1202

FOR TRAINING ONLY

WPS-SER4
1-26-88

c) Mechanical Vertical Panel B

The "Permissive" status panel (44905-) contains the following two windows applicable to the SI System.

- 44905-1201 SI Signal Actuated
- 44905-1202 Automatic SI Disabled

These two status lights are normally dim. Window 1201 illuminates when either SI Train A or B is actuated. This window will stay illuminated until SI has been reset by depressing the appropriate SI Train A and/or B reset pushbuttons. See Section 3.7 for additional information on the SI Actuation Signal. Window 1202, Automatic SI Disabled, illuminates

if the reactor trip breakers are open and SI has been reset. When this window is lit, only the Manual SI Pushbutton can initiate SI. After a reactor trip, the Reactor Trip Breakers must be closed before Auto SI can be enabled.

3.7.2 Local Indications