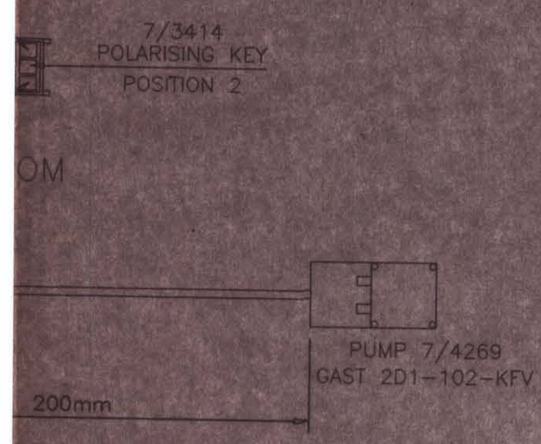

LOW WITH TJ200000 AND
UST BE >400 CC/MIN.

ASSEMBY PROCEDURE

1. FIT 4 OFF HOSE BARBS 7/2318
2. STAMP PORTS A,B,P,S AS SHOWN
3. INSERT 2 SKT SET SCREWS 4/213
4. FIT RESTRICTOR BRACKET 200096 USING PAN HEAD SCREW M3 X 6 4/093 AND SPRING WASHER 4/009
5. BLOW OUT BLOCK BEFORE FITTING.

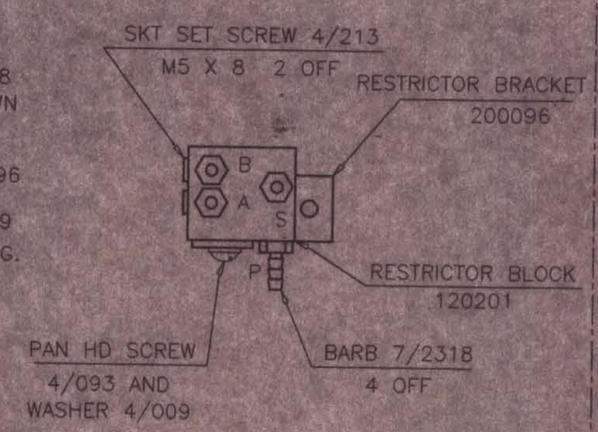

RESTRICTOR BLOCK ASSEMBLY

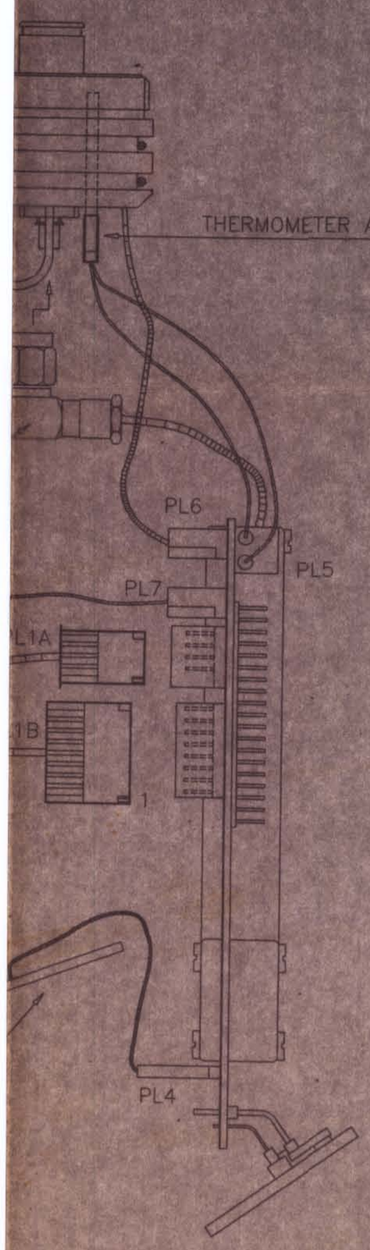

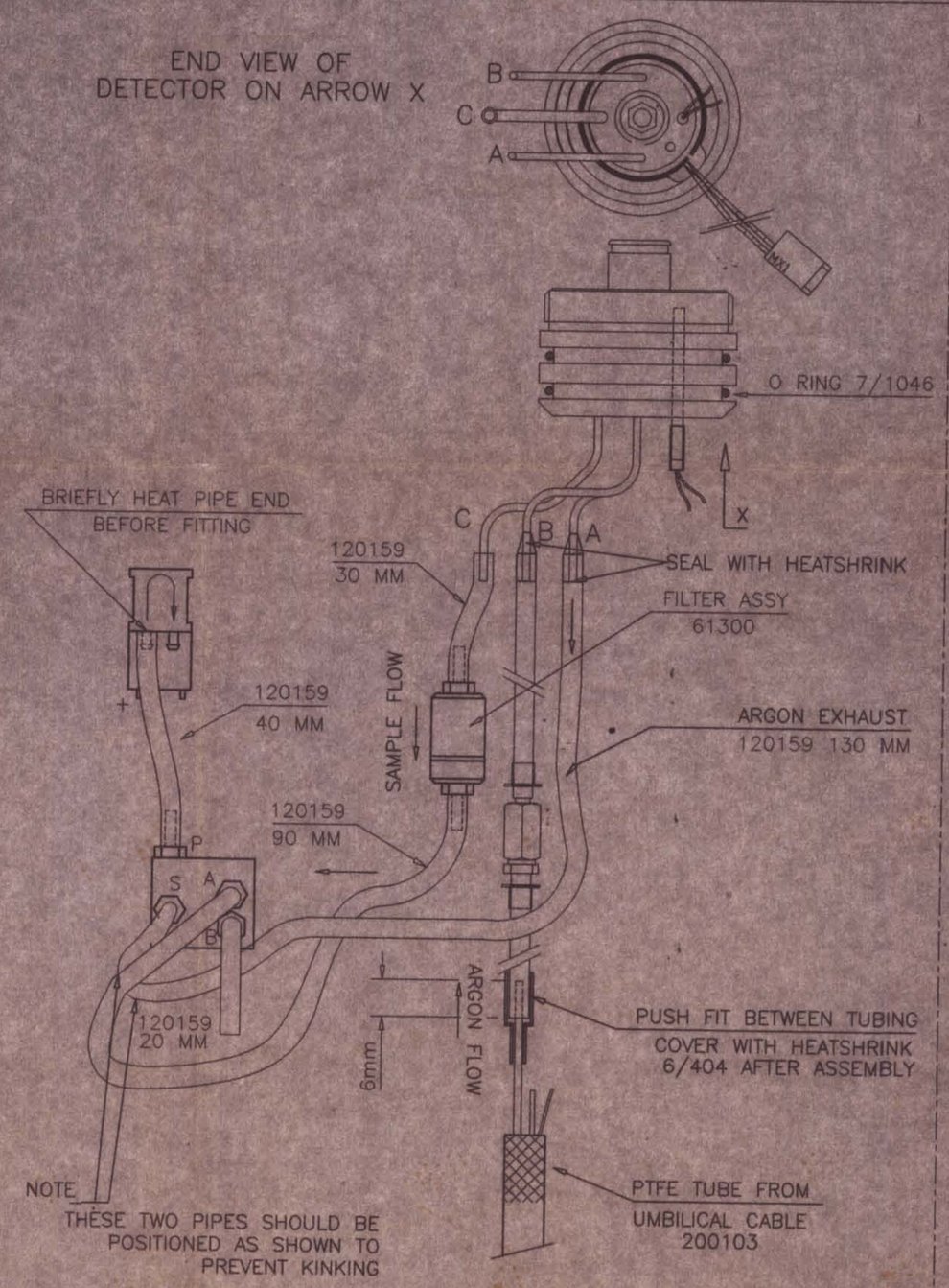

SCHEMATIC DIAGRAM SHOWING
DETECTOR PIPEWORK IN HAND UNIT

FOR ASSEMBLY PROCEDURE

ISSUE	A	B	1	2	3	4	5	6	7	8
CH.No.	–	–	–	1348	1369	1424	1423	0103	0279	0316
DATE	28/9/93	8/4/94	12/7/94	8/9/94	19/1/95	26/3/96	16/4/96	19.11.97	24.11.99	30.03.00

CONFORMS TO BS308 | DIMS. IN mm | DO NOT SCALE PRINT | REMOVE ALL BURRS & SHARP EDGES

TOLERANCES UNLESS OTHERWISE STATED
WHOLE NUMBERS ±0.4
1 DECIMAL PLACE= ±0.2
2 DECIMAL PLACES= ±0.1
SCREW THREADS MED. FIT
ANGLES ±30'

CHKD. daveB | SCALE N.T.S. | MATL. — | DRN. R.RAND | DATE 28\9\93 | FINISH —

TITLE HAND UNIT ASSY (SHT.1 OF 2)

AIQUALITEK Ltd
LONDON ROAD, PAMPISFORD, CAMBRIDGE, CB2 4EF.
TEL: (01223) 834420 FAX: (01223) 835050

DRG.No. A/200001-1

THIS DRG MUST NOT BE LOANED OR COPIED IN WHOLE OR PART WITHOUT WRITTEN PERMISSION OF AI QUALITEK LTD

A1

D-8