NOTES

1. 'A'~HOLES~6off ø3.5 THRO', THEN COUNTERBORED ø6.8 TO THE DEPTH SHOWN IN PART SECTION 'X'~'X'.

2. ALL RADIUS TO BE 1mm, UNLESS OTHERWISE STATED.

3. SPRAY INSIDE OF MOULDING WITH ELECTROMAGNETIC SHIELD COATING J2904 AVAILABLE FROM TRIMITE.

4. AREA BETWEEN TABS AND SIDE WALL TO BE MASKED BEFORE SPRAYING TO ENSURE GOOD FIT ON ASSY (5 PLACES) SEE HATCHING THIS SHEET.

5. SCREW THIS HALF TO '200011' AND MASK THE AREA AROUND THE SWITCH PANEL AS SHOWN IN DETAIL 'A' (SEE SHEET 2).

6. SPRAY THE OUTSIDE OF THE 2 MOULDINGS USING TRIMITE 671, MIDDLE GRAPHITE TO BS.381~C.

7. FINISH TO BE LIGHT SPATTER TEXTURE.

8. OVERSPRAY IS ACCEPTABLE INSIDE THE HAND GUN AS SHOWN IN DETAIL 'A'.

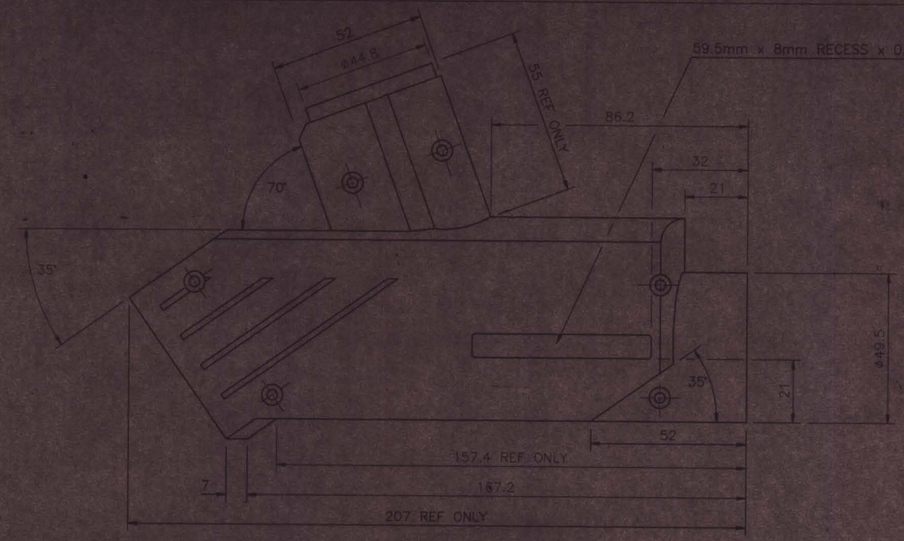

PART VIEW SHOWING STYLING GROOVE DETAIL

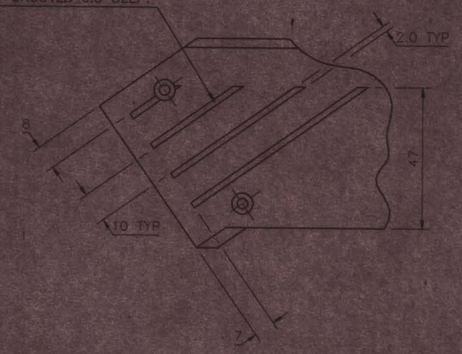

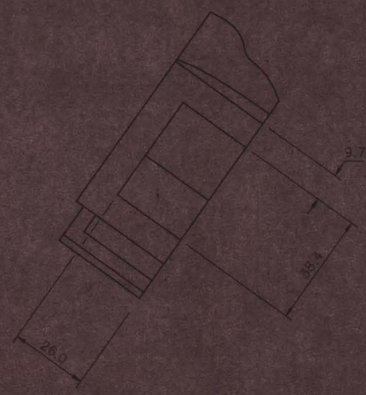

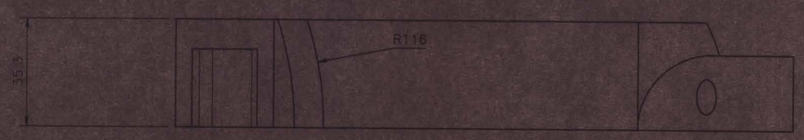

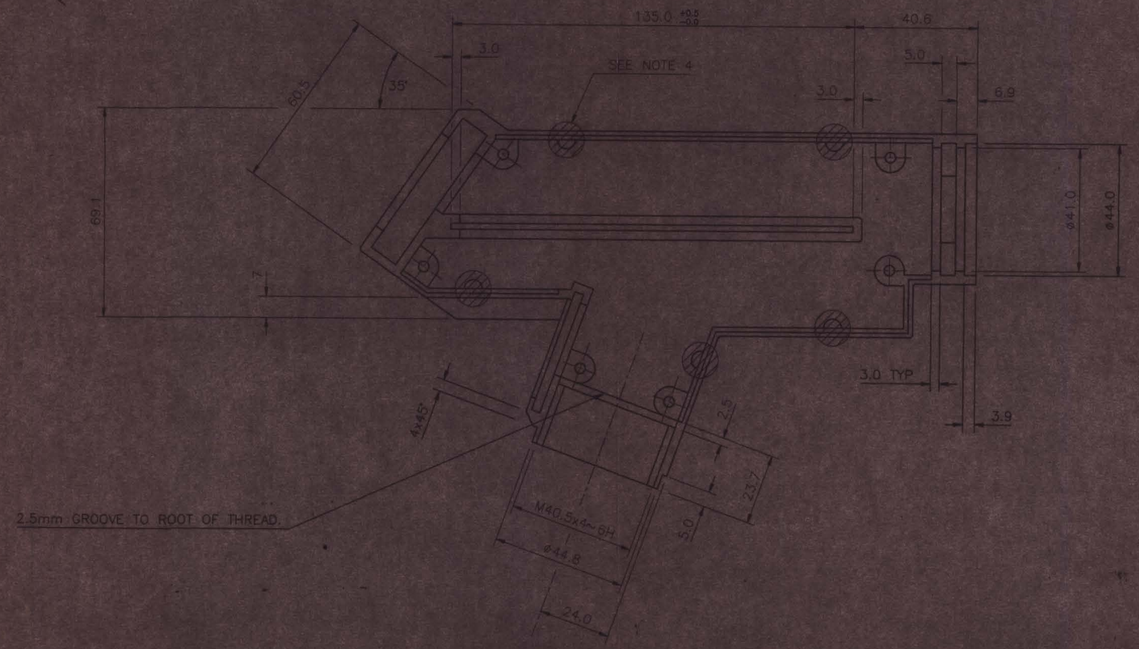

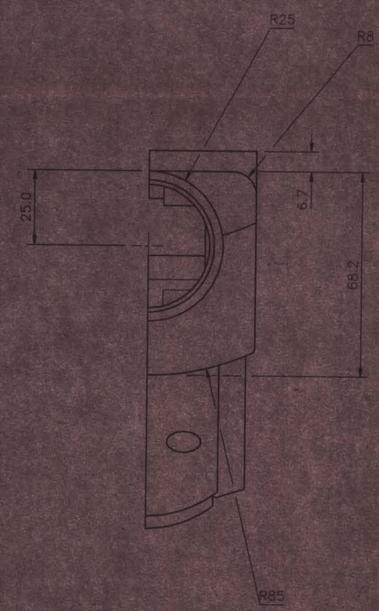

SHEET 1 OF 2

SHEET 2 OF 2 SHOWS SECTION VIEWS AND FURTHER DETAIL

D-5

ISSUE	A	B	C								
CH.NO.	-		-		1	1489	1497				8200065
DATE	8/10/90	16/11/92	3/10/93	13/7/93		18/12/95	26/1/96				

CONFORMS TO BS308	DIMS. IN mm	DO NOT SCALE PRINT	REMOVE ALL BURRS & SHARP EDGES.	TOLERANCES UNLESS OTHERWISE STATED. WHOLE NUMBERS ±0.4 1 DECIMAL PLACE= ±0.2 2 DECIMAL PLACES= ±0.1 SCREW THREADS MED. FIT ANGLES ±30'
DRWD.	SCALE 1 : 1	MATL. ME600 RIGID POLYURETHANE		
TITLE Rainclear	DATE 17\8\92	REF. SEE NOTES 3 & 4	PART T.H.MOULDING	

Alcambridge Ltd — LONDON ROAD, PAMPISFORD, CAMBRIDGE, CB2 4EF. TEL: (0223) 834420 FAX: (0223) 838050 — DRWN. — DRG.No. 200010

THIS DRAWING MAY NOT BE LOANED OR COPIED IN WHOLE OR PART WITHOUT WRITTEN PERMISSION OF ALCAMBRIDGE LTD.

A1