NUREG/CR-6722

TRAC-M/FORTRAN 90 (Version 3.0) User's Manual

Los Alamos National Laboratory

U.S. Nuclear Regulatory Commission
Office of Nuclear Regulatory Research
Washington, DC 20555-0001

AVAILABILITY OF REFERENCE MATERIALS IN NRC PUBLICATIONS

NRC Reference Material

As of November 1999, you may electronically access NUREG-series publications and other NRC records at NRC's Public Electronic Reading Room at www.nrc.gov/NRC/ADAMS/index.html.
Publicly released records include, to name a few, NUREG-series publications; *Federal Register* notices; applicant, licensee, and vendor documents and correspondence; NRC correspondence and internal memoranda; bulletins and information notices; inspection and investigative reports; licensee event reports; and Commission papers and their attachments.

NRC publications in the NUREG series, NRC regulations, and *Title 10, Energy*, in the Code of *Federal Regulations* may also be purchased from one of these two sources.

1. The Superintendent of Documents
   U.S. Government Printing Office
   Mail Stop SSOP
   Washington, DC 20402–0001
   Internet: bookstore.gpo.gov
   Telephone: 202-512-1800
   Fax: 202-512-2250
2. The National Technical Information Service
   Springfield, VA 22161–0002
   www.ntis.gov
   1–800–553–6847 or, locally, 703–605–6000

A single copy of each NRC draft report for comment is available free, to the extent of supply, upon written request as follows:
Address: Office of the Chief Information Officer,
Reproduction and Distribution
Services Section
U.S. Nuclear Regulatory Commission
Washington, DC 20555-0001
E-mail: DISTRIBUTION@nrc.gov
Facsimile: 301–415–2289

Some publications in the NUREG series that are posted at NRC's Web site address www.nrc.gov/NRC/NUREGS/indexnum.html are updated periodically and may differ from the last printed version. Although references to material found on a Web site bear the date the material was accessed, the material available on the date cited may subsequently be removed from the site.

Non-NRC Reference Material

Documents available from public and special technical libraries include all open literature items, such as books, journal articles, and transactions, *Federal Register* notices, Federal and State legislation, and congressional reports. Such documents as theses, dissertations, foreign reports and translations, and non-NRC conference proceedings may be purchased from their sponsoring organization.

Copies of industry codes and standards used in a substantive manner in the NRC regulatory process are maintained at—
The NRC Technical Library
Two White Flint North
11545 Rockville Pike
Rockville, MD 20852–2738

These standards are available in the library for reference use by the public. Codes and standards are usually copyrighted and may be purchased from the originating organization or, if they are American National Standards, from—
American National Standards Institute
11 West 42nd Street
New York, NY 10036–8002
www.ansi.org
212–642–4900

Legally binding regulatory requirements are stated only in laws; NRC regulations; licenses, including technical specifications; or orders, not in NUREG-series publications. The views expressed in contractor-prepared publications in this series are not necessarily those of the NRC.

The NUREG series comprises (1) technical and administrative reports and books prepared by the staff (NUREG–XXXX) or agency contractors (NUREG/CR–XXXX), (2) proceedings of conferences (NUREG/CP–XXXX), (3) reports resulting from international agreements (NUREG/IA–XXXX), (4) brochures (NUREG/BR–XXXX), and (5) compilations of legal decisions and orders of the Commission and Atomic and Safety Licensing Boards and of Directors' decisions under Section 2.206 of NRC's regulations (NUREG–0750).

DISCLAIMER: This report was prepared as an account of work sponsored by an agency of the U.S. Government. Neither the U.S. Government nor any agency thereof, nor any employee, makes any warranty, expressed or implied, or assumes any legal liability or responsibility for any third party's use, or the results of such use, of any information, apparatus, product, or process disclosed in this publication, or represents that its use by such third party would not infringe privately owned rights.

NUREG/CR-6722

TRAC-M/FORTRAN 90 (Version 3.0) User's Manual

Manuscript Completed: March 2001
Date Published: May 2001

Prepared by
R.G. Steinke, V. Martinez, N.M. Schnurr,
J.W. Spore, J.V. Valdez

Los Alamos National Laboratory
Los Alamos, New Mexico 87545

F. Odar, NRC Project Manager

Prepared for
Division of Systems Analysis and Regulatory Effectiveness
Office of Nuclear Regulatory Research
U.S. Nuclear Regulatory Commission
Washington, DC 20555-0001
NRC Job Code W6245

TRAC-M/FORTRAN 90 (VERSION 3.0)
USER'S MANUAL

by

R. G. Steinke, V. Martinez, N. M. Schnurr,
J. W. Spore, and J. V. Valdez

ABSTRACT

The Transient Reactor Analysis Code (TRAC) was developed to provide advanced best-estimate predictions of postulated accidents in light-water reactors. The TRAC-M program provides this capability for pressurized water reactors and for many thermal-hydraulic test facilities. The code features either a one-, two-, or three-dimensional treatment of the pressure vessel and its associated internals; a two-fluid nonequilibrium hydrodynamics model with a noncondensable gas field and solute tracking; flow-regime-dependent constitutive-equation treatment; optional reflood-tracking capability for bottom-flood and falling-film quench fronts, and consistent treatment of entire accident sequences, including the generation of consistent steady-state initial conditions. The stability-enhancing, two-step numerical algorithm is used in the one-, two-, and three-dimensional hydrodynamics and permits violation of the material Courant-limit condition up to 1000. This technique permits large timesteps, which reduce the run time for slow transients.

TRAC-M no longer models the accumulator (ACCUM) component and steam-generator (STGEN) component. The ACCUM component needs to be modeled by FILL and PIPE components, and the STGEN component needs to be modeled by using heat-structure (HTSTR), PIPE, and TEE components, as described in Appendix J. The HTSTR component provides the user with a very flexible capability to model heat transfer in complicated geometries with many optional features. An improved reflood model based on mechanistic and defensible models has been added. TRAC-M also contains additions and refinements for several components and improved constituative models. A steady-state initialization procedure provides a better coolant temperature and flow distribution initial estimate for steady-state calculations.

This user's guide describes the components and control systems modeled in TRAC-M and gives detailed information the user needs to prepare an input-data file and carry out neutronic-thermal-hydraulic simulations using TRAC-M. This release of the TRAC-M/F90 User's Manual is consistent with TRAC-M/F90, Version 3.0. Also, areas are described where TRAC-M/F90, Version 3.0 differs from TRAC-M/F77, Version 5.5.2, and input specifications are provided for both codes.

CONTENTS

Page

1.0. INTRODUCTION 1-1

2.0. OVERVIEW OF TRAC-M 2-1

2.1. History 2-2

2.2. TRAC Characteristics 2-3

2.2.1. Variable-Dimensional Fluid Dynamics 2-3

2.2.2. Nonhomogeneous, Nonequilibrium Modeling 2-4

2.2.3. Flow-Regime-Dependent Constitutive Equation Package 2-4

2.2.4. Comprehensive Heat-Transfer Capability 2-4

2.2.5. Component and Functional Modularity 2-4

2.3. Physical Phenomena Considered 2-5

2.4. Restrictions on the Use of TRAC-M 2-6

2.5. Changes from TRAC-PF1/MOD1 2-6

2.6. TRAC-M 2-8

2.6.1. TRAC-M/F77 2-9

2.6.2. TRAC-M/F90 2-9

2.6.3. Future Development 2-10

3.0. CONTROL PROCEDURE 3-1

3.1. Signal Variables 3-1

3.2. Control Blocks 3-2

3.3. Trips 3-3

3.4. Component-Action Tables 3-5

3.5. Multipass Control-Parameter Evaluation Procedure 3-7

3.6. Control Procedure for Steady-State Calculations 3-7

4.0. COMPONENT MODELS 4-1

4.1. PIPE Component 4-1

4.2. BREAK and FILL Components 4-2

4.3. HTSTR Component 4-4

4.4. PLENUM Component 4-17

4.5. PRIZER Component 4-18

4.6. PUMP Component 4-20

4.7. SEPD Component 4-27

4.8. TEE Component 4-31

4.9. TURB Component 4-32

4.10. VALVE Component 4-32

4.11. VESSEL Component 4-35

5.0. GENERAL GUIDELINES 5-1

5.1. TRAC-M Use—An Overview 5-1

5.1.1. Database Preparation 5-1

5.1.2. Input-Data Model Preparation 5-1

5.1.3. Work Flow 5-3

5.1.4. I/O in SI or English Units 5-4

5.2. Database 5-6

5.2.1. Data Requirements 5-7

5.2.1.1. Thermal-hydraulic geometric data. 5-7

5.2.1.2. 1D heat-transfer structural data. 5-8

5.2.1.3. Control procedures. 5-8

CONTENTS (cont)

Page

5.2.1.4. Initial and boundary conditions. 5-9
5.2.1.5. Model-selection parameters. 5-10
5.2.1.6. Reactor description (VESSEL) 5-10
5.2.1.7. HTSTR component. 5-11
5.2.2. Data Sources 5-11
5.2.3. Documentation 5-12
5.3. Input-Data Preparation Guidelines 5-12

6.0. INPUT-DATA PREPARATION 6-1
6.1. Input-Data Organization 6-1
6.2. Dump/Restart Capability 6-4
6.3. TRAC-M Input-Data Format Specification 6-5
6.3.1. Main Data 6-5
6.3.2. Countercurrent Flow-Limitation Data. 6-26
6.3.3. Material-Properties Data 6-27
6.3.4. Hydraulic-Path Steady-State Initialization Data. 6-28
6.3.5. Control-Parameter Data 6-31
6.3.5.1. CSS controller data 6-32
6.3.5.2. Multipass control-parameter evaluation 6-35
6.3.5.3. Signal-variable data 6-36
6.3.5.4. User-defined units-name label data 6-43
6.3.5.5. Control-block data 6-45
6.3.5.6. Trip data 6-62
6.3.6. Radiation-Enclosure Data 6-72
6.3.7. Component Data 6-73
6.3.7.1. FILL component 6-82
6.3.7.2. HTSTR component with ROD or SLAB elements. 6-91
6.3.7.3. PIPE component. 6-124
6.3.7.4. PLENUM component 6-134
6.3.7.5. PRIZER component. 6-136
6.3.7.6. PUMP component. 6-140
6.3.7.7. SEPD component. 6-155
6.3.7.8. TEE component 6-176
6.3.7.9. TURB component. 6-195
6.3.7.10. VALVE component 6-206
6.3.7.11. VESSEL component 6-217
6.3.8. End-of-Component-Input End Card 6-229
6.3.9. Timestep Data 6-229
6.3.10. End-of-Input Endflag Card 6-230
6.4. LOAD Subroutine 6-230
6.5. FREE Format 6-232
6.5.1. FREE-Format Comments, Problem Title Cards, and Hollerith Component Descriptions 6-233
6.5.2. FREE-Format Input-Error Handling 6-234
6.6. NAMELIST Format 6-235
6.7. Input and Output Files 6-236
6.8. Conversion of TRAC-PF1/MOD1 Input-Data Files 6-238

7.0. DETAILED GUIDELINES 7-1
7.1. Thermal-Hydraulic Components 7-1
7.1.1. Common Guidelines 7-1
7.1.1.1. Length array 7-1

CONTENTS (cont)

Page

7.1.1.2. Volume array. 7-2
7.1.1.3. Flow area array. 7-2
7.1.1.4. Gravity array. 7-2
7.1.1.5. Hydraulic diameter array. 7-5
7.1.1.6. Additive loss coefficient array. 7-5
7.1.2. Specific Guidelines 7-6
7.1.2.1. Gravity term evaluation in TEEs. 7-6
7.1.2.2. Technique for combining loops. 7-7
7.1.2.3. Fine-noding guidelines. 7-9
7.1.2.4. Break-flow modeling. 7-10
7.1.2.5. Sizing valves. 7-11
7.1.2.6. Accumulator. 7-12
7.1.2.7. Pump. 7-15
7.1.2.8. Pressurizer. 7-15
7.1.2.9. Steam Generator (SG) 7-16
7.2. Wall Heat-Transfer Structures 7-18
7.3. Control Procedures 7-20
7.3.1. Example 1: Trip-Controlled Valve Closure 7-20
7.3.2. Example 2: Two-way Open and Close VALVE-Component Action 7-27
7.3.3. Example 3: Feedwater Control by FILL Components 7-36
7.3.4. Example 4: Use of Control Blocks to Model a Cooldown Rate Controller 7-41
7.3.5. Example 5: Use of a Rate-Factor Table to Reduce Overadjustment by an ON/OFF Switch Trip Controller 7-48
7.3.6. Example 6: SG Level Controller 7-53
7.3.7. Example 7: Pressurizer Control System 7-54
7.3.7.1. Level Controller 7-54
7.3.7.2. Pressure Controller 7-55
7.3.7.3. Heater Controller. 7-55
7.3.8. Example 8: Steam-Dump Control System 7-56
7.3.9. Example 9: Trip-Controlled Trip 7-57
7.4. Initial and Boundary Conditions 7-59
7.4.1. Initial Conditions 7-59
7.4.2. Boundary Conditions 7-60
7.5. Model-Selection Parameters 7-60
7.5.1. ICHF 7-60
7.5.2. NFF 7-61
7.6. Reactor Geometry 7-61
7.7. Heat-Structure Components 7-66
7.7.1. Geometry 7-67
7.7.1.1. Single Structural Material 7-67
7.7.1.2. Several Structural Materials 7-68
7.7.2. Reactor-Core Reflood 7-70
7.7.3. Reactor-Core Fuel Rods 7-72

8.0. EXECUTION OF TRAC-M 8-1

8.1. Assembling the Input-Data File 8-1
8.1.1. Main Data 8-1
8.1.2. Countercurrent Flow-Limitation Data 8-2
8.1.3. Material-Properties Data 8-2
8.1.4. Hydraulic-Path, Steady-State Initialization Data 8-2
8.1.5. Control-Parameter Data 8-2
8.1.5.1. Multipass Control-Parameter Data 8-2

CONTENTS (cont)

Page

8.1.5.2. Signal-Variable Data 8-3
8.1.5.3. Control-Block Data 8-3
8.1.5.4. Trip Data 8-3
8.1.6. Radiation-Enclosure Data 8-4
8.1.7. Component Data 8-4
8.1.8. Timestep Data 8-4
8.2. Steady-State Calculation 8-4
8.2.1. Matching Known Performance 8-5
8.2.2. Debugging Techniques 8-6
8.2.2.1. TRAC-M Diagnostic Outputs 8-6
8.2.2.2. Timestep Control 8-8
8.2.2.3. On-Line Debugging Tools 8-8
8.2.3. Sample Input-Data Files 8-8
8.2.4. TRAC-M Output Files 8-9
8.2.4.1. TRCMSG 8-9
8.2.4.2. TRCOUT 8-9
8.2.4.3. TRCDMP 8-14
8.2.4.4. TRCXTV 8-14
8.2.4.5. INLAB 8-14
8.3. Transient Calculation 8-15
8.3.1. Matching Known Performance 8-15
8.3.2. Debugging Techniques 8-16
8.3.2.1. TRAC-M diagnostic outputs 8-16
8.3.2.2. Timestep control 8-19
8.3.2.3. On-line debugging tools 8-20
8.3.3. Sample Input-Data Files 8-20
8.3.4. TRAC-M Output Files 8-20
8.4. Output Processors 8-20

APPENDIX A A-1

APPENDIX B B-1

APPENDIX C C-1

APPENDIX D D-1

APPENDIX E E-1

E.1. Main Data E-2
E.2. Countercurrent Flow-Limitation Data E-4
E.3. Material-Properties Data E-4
E.4. Hydraulic-Path Steady-State Initialization Data E-5
E.5. Control-Parameter Data E-5
E.5.1. CSS-controller data. E-5
E.5.2. Multipass control-parameter evaluation data. E-6
E.5.3. Signal-variable data. E-6
E.5.4. Control-block data. E-7
E.5.5. Trip data. E-12
E.5.6. Radiation-enclosure data. E-19
E.6. Component Data E-19
E.7. Timestep Data E-39
E.8. Input-Data TRACIN File Listing E-40

APPENDIX F F-1

CONTENTS (cont)

Page

F.1. Notes on the TRACIN-File Input Data for the Transient Calculation F-2
F.2. Input-Data Listing of the TRACIN File for the Transient Calculation F-3

APPENDIX G G-1
G.1. Notes on the TRCMSG File From the Steady-State Calculation G-1
G.2. Listing of the TRCMSG File From the Steady-State Calculation G-6
G.3. Notes on the TRCMSG File From the Transient Calculation G-15
G.4. Listing of the TRCMSG File From the Transient Calculation G-18

APPENDIX H H-1
H.1. Notes on the Steady-State Calculation TRCOUT-File Segments H-1
H.2. Listing of the Steady-State Calculation TRCOUT-File Segments. H-13
H.3. Notes on the Transient Calculation TRCOUT-File Segments. H-63
H.4. Listing of the Transient Calculation TRCOUT-File Segments. H-67

APPENDIX I I-1
I.1. Introduction I-1
I.2. Input Specifying the Reactivity-Feedback Model I-5
I.3. Printout of the Input Data for HTSTR Component ROD 900 With Reactivity Feedback Modeled I-10

APPENDIX J J-1
J.1. Converting the ACCUM Component J-1
J.2. Converting the STGEN Component J-5

APPENDIX K K-1
K.1. Introduction K-1
K.2. Global Variable Graphics K-1
K.3. Signal-Variable, Control-Block, and Trip-Signal Graphics K-2
K.4. General One-Dimensional Hydraulic-Component Graphics K-2
K.4.1. BREAK Component Graphics. K-4
K.4.2. FILL Component Graphics. K-5
K.4.3. HTSTR (Heat-Structure) Component ROD- or SLAB-Element Graphics. K-6
K.4.4. PIPE Component Graphics. K-7
K.4.5. PLENUM Component Graphics. K-8
K.4.6. PRIZER (Pressurizer) Component Graphics. K-9
K.4.7. PUMP Component Graphics. K-9
K.4.8. TEE Component Graphics. K-9
K.4.9. VALVE Component Graphics. K-10
K.5. Three-Dimensional VESSEL Component Graphics K-10

APPENDIX L L-1

APPENDIX M M-1

FIGURES

		Page
Fig. 3-1.	Control-procedure coupling to the TRAC-M model of a PWR.	3-8
Fig. 4-1.	PIPE-component noding diagram.	4-2
Fig. 4-2.	BREAK-component noding diagram.	4-3
Fig. 4-3.	FILL-component noding diagram.	4-4
Fig. 4-4.	ROD or SLAB geometry HTSTR-component example with hydraulic-cell coupling on both the inner and outer surfaces.	4-7
Fig. 4-5.	Cross section of an external-surface thermocouple attached to a cylindrical ROD element of a HTSTR component.	4-8
Fig. 4-6.	Axial-power-shape table ZPWTB with NZPWTB = 3 P(z) axial-power shapes having gas volume fraction dependence.	4-14
Fig. 4-7.	NZPWI-option examples of defining the axial-power-shape z dependence.	4-16
Fig. 4-8.	PRIZER-component noding diagram.	4-19
Fig. 4-9.	PUMP-component noding diagram.	4-20
Fig. 4-10.	Semiscale single-phase homologous pump-head curves.	4-27
Fig. 4-11.	Semiscale two-phase fully degraded homologous pump-head curves.	4-27
Fig. 4-12.	Semiscale pump-head degradation multiplier curve.	4-28
Fig. 4-13.	Semiscale single-phase homologous toque curves.	4-28
Fig. 4-14.	Semiscale torque degradation multiplier curve.	4-28
Fig. 4-15.	LOFT single-phase homologous pump-head curves.	4-28
Fig. 4-16.	LOFT two-phase fully degraded homologous pump-head curves.	4-29
Fig. 4-17.	LOFT pump-head degradation multiplier curve.	4-29
Fig. 4-18.	LOFT single-phase homologous torque curves.	4-29
Fig. 4-19.	LOFT torque degradation multiplier curve.	4-29
Fig. 4-20.	SEPD-component noding diagram.	4-32
Fig. 4-21.	TEE-component noding diagram.	4-33
Fig. 4-22.	VALVE-component noding diagram.	4-33
Fig. 4-23.	Cell noding diagram for a typical PWR vessel.	4-36
Fig. 4-24.	VESSEL geometry: 3D mesh construction with three rings, six azimuthal sectors, and seven axial levels.	4-36
Fig. 4-25.	Shown are the vertex corners of a 3D mesh cell and the face numbers on the near-side faces. Faces 1, 2, and 3 are in the , z, and r directions, respectively.	4-37
Fig. 4-26.	Flow restrictions and downcomer modeling.	4-39
Fig. 4-27.	PIPE component connections to the VESSEL component.	4-39
Fig. 4-28.	Reactor-core region inside the VESSEL component.	4-40
Fig. 5-1.	Problem solving with the TRAC-M code.	5-2

FIGURES (cont)

		Page
Fig. 5-2.	Work flow for TRAC-M and support codes.	5-5
Fig. 5-2a.	Future Separation of Input Processing.	5-6
Fig. 5-3.	Primary-side reactor-coolant system diagram for a three-loop plant.	5-26
Fig. 5-4.	Primary-system modeling overview for a three-loop plant.	5-28
Fig. 5-5.	Secondary-system modeling overview for a three-loop plant.	5-28
Fig. 5-6.	Reactor-vessel noding diagram for a three-loop plant.	5-30
Fig. 5-7.	Reactor-vessel HTSTR (heat structure) components for a three-loop plant.	5-31
Fig. 5-8.	SG noding diagram for a three-loop plant.	5-32
Fig. 5-9.	Noding diagram for primary-system loop 1 for a three-loop plant.	5-33
Fig. 5-10.	Noding diagram for primary-system loop 2 for a three-loop plant.	5-34
Fig. 5-11.	Noding diagram for primary-system loop 3 for a three-loop plant.	5-35
Fig. 5-12.	Emergency-core-cooling system for a three-loop plant.	5-36
Fig. 5-13.	Main-steam line and steam-dump systems for a three-loop plant.	5-36
Fig. 5-14.	High-pressure feedwater system for a three-loop plant.	5-37
Fig. 5-15.	SG tube-rupture model for a three-loop plant.	5-37
Fig. 5-16.	Model changes for SBLOCA for a three-loop plant.	5-38
Fig. 5-17.	Input-data annotation example.	5-39
Fig. 6-1.	TRAC-M input-data parameter categories in the TRACIN file.	6-2
Fig. 6-2.	Proportional plus integral controller diagram.	6-58
Fig. 6-3.	Proportional plus integral plus derivative controller diagram.	6-59
Fig. 6-4.	TRAC-M input- and output-data files.	6-237
Fig. 7-1.	Illustration of evaluating the GRAV gravity term.	7-4
Fig. 7-2.	GRAV gravity-term evaluation at the TEE internal-junction interface.	7-8
Fig. 7-3.	TRAC-M small break noding diagram.	7-11
Fig. 7-4.	TRAC-M model of a once-through SG with aspirator flow.	7-19
Fig. 7-5.	Diagram of a TRAC-M once-through SG with dual-channel modeling.	7-19
Fig. 7-6.	Trip-signal-range-type diagram for turbine stop valve control.	7-23
Fig. 7-7.	Flow-area fraction vs time for the turbine stop valve.	7-26
Fig. 7-8.	Accumulator check-valve model.	7-27
Fig. 7-9.	Trip-signal-range-type diagram for accumulator check-valve control.	7-29
Fig. 7-10.	VALVE opening and closing tables for the accumulator check valve.	7-33
Fig. 7-11.	Modified VALVE tables for a restart calculation when FAVLVE = 0.8.	7-35
Fig. 7-12.	Trip-signal-range-type diagram for main and auxiliary feedwater control.	7-39
Fig. 7-13.	Main-feedwater and auxiliary-feedwater FILL component-action tables.	7-42

FIGURES (cont)

		Page
Fig. 7-14.	Cooldown-rate controller for the atmospheric dump valves	7-44
Fig. 7-15.	ON/OFF switch trip controller with a rate-factor table.	7-50
Fig. 7-16.	ON/OFF switch trip controller adjustment of the steam flow control valve.	7-52
Fig. 7-17.	Numbering convention for VESSEL-cell faces.	7-63
Fig. 7-18.	Special friction factor *f*dt for cross flow in rod bundles (Ref. 7-7).	7-66
Fig. 7-19.	Transient reactor power for the power-vs-time calculation (solid line) and the point-reactor kinetics calculation (dashed line).	7-77
Fig. 7-20.	Cladding temperature at the reactor-core midplane for the power-vs-time calculation (solid line) and the point-reactor kinetics calculation (dashed line).	7-77
Fig. 7-21.	Integrated reactor power for the power-vs-time calculation (solid line) and the point-reactor kinetics calculation (dashed line).	7-78
Fig. 7-22.	TRAC–P calculated ANS power curve.	7-82
Fig. 7-23.	TRAC–P calculated 1.2 times ANS power curve.	7-83
Fig. 7-24.	Ratio of the TRAC–P 1.2 times ANS divided by ANS power curve.	7-83
Fig. E-1	Pressurizer control procedure	E-11
Fig. E-2	Steam-generator level-control procedure	E-13
Fig. E-3	Steam-dump control procedure	E-14
Fig. I-1	Fuel-temperature reactivity coefficient as a function of fuel temperature.	I-3
Fig. I-2	Coolant-temperature reactivity coefficient as a function of the coolant temperature, coolant gas volume fraction, and boron ppm ratio	I-4
Fig. I-3	Boron ppm ratio reactivity coefficient as a function of the coolant temperature and boron ppm ratio.	I-5
Fig. J-1	Hydraulic-cell noding and heat-transfer path diagram for the Westinghouse three-loop plant steam generators.	J-19

TABLES

		Page
Table 3-1	ADJUSTABLE-HARDWARE COMPONENT ACTIONS	3-6
Table 4-1	CORE POWER SPECIFIED BY TABLE LOOKUP	4-10
Table 4-2	DEFINITIONS OF THE FOUR CURVE SEGMENTS THAT DESCRIBE THE HOMOLOGOUS PUMP-HEAD CURVES$_a$	4-23
Table 5-1	W THREE-LOOP PLANT DATABASE FILE	5-13
Table 5-2	ZION-1 NUCLEAR POWER PLANT DATABASE (FSAR ONLY)	5-25
Table 5-3	TRAC-M COMPONENTS	5-27
Table 6-1	SIGNAL-VARIABLE PARAMETERS	6-38
Table 6-2	UNITS NAMES FOR CONTROL-BLOCK AND TRIP PARAMETERS AND THEIR SI, AND ENGLISH UNITS AND SI TO ENGLISH CONVERSION FACTORS AND SHIFTS	6-43
Table 6-3	CONTROL-BLOCK FUNCTION OPERATIONS	6-47
Table 6-4	TRIP SIGNAL-RANGE TYPES	6-65
Table 6-5	ARITHMETIC-OPERATOR ID NUMBERS OF THE Jth ARITHMETIC SUBEXPRESSION	6-68
Table 7-1	TRAC-M STANDALONE MODEL FOR VALVE SIZING	7-13
Table 7-2	INPUT COMPONENT DATA FOR THE TURBINE STOP VALVE	7-24
Table 7-3	INPUT COMPONENT DATA FOR THE ACCUMULATOR CHECK VALVE	7-31
Table 7-4	COMPONENT INPUT DATA FOR MAIN AND AUXILIARY FEEDWATER	7-40
Table 7-5	INPUT DATA FOR THE ADV COOLDOWN-RATE CONTROLLER	7-45
Table 7-6	COMPONENT INPUT DATA FOR CONTROLLER-ACTIVATED ADV	7-47
Table 7-7	VALVE COMPONENT INPUT DATA WITH A RATE-FACTOR TABLE	7-51
Table 7-8	INPUT DATA FOR A TRIP-CONTROLLED TRIP	7-58
Table 7-9	TYPICAL US PWR REACTOR-KINETICS PARAMETERS	7-76
Table 7-10	EXPANDED SET OF DECAY-HEAT CONSTANTS	7-79
Table 7-11	COMPARISON OF TRAC-P DECAY POWER TO ANS 5.1 DECAY POWER FOR INFINITE OPERATING PERIOD	7-79
Table 7-12	TYPICAL OPERATING HISTORY	7-80
Table 7-13	COMPARISON OF TRAC-P DECAY POWER TO ANS 5.1 DECAY POWER FOR FINITE OPERATING PERIOD	7-80
Table 7-14	RATIO OF DECAY HEAT WITH NEUTRON ABSORPTION TO VALUES WITHOUT ABSORPTION FOR ^{235}U THERMAL FISSIONS FOR FOUR YEARS OF OPERATING HISTORY WITH TYPICAL LWR NEUTRON SPECTRUM	7-81
Table 7-15	TRAP-P (and TRAC-M) INPUT FOR THE HEAVY-ELEMENT DECAY-HEAT GROUPS	7-82
Table 8-1	TRAC–P PLANT MODEL STEADY-STATE CONDITIONS	8-7

TABLES (cont)

		Page
Table 8-2	TRAC-M INPUT-DATA PROCESSING WARNING MESSAGES	8-10
TABLE I-1	REACTIVITY-COEFFICIENT FORMS	I-6

ACKNOWLEDGMENTS

Many people contributed to recent TRAC-P and TRAC-M code development and to this report. Because this work was a team effort, there was considerable overlap in responsibilities and contributions. The participants are listed according to their primary activity. Those with the prime responsibility for each area are listed first.

Principal Investigators:	J. F. Dearing, John Mahaffy, and Jay W. Spore; Susan J. Jolly-Woodruff, Ju-Chuan Lin, Ralph A. Nelson, and Robert G. Steinke
Fluid Dynamics:	Jay W. Spore, Susan J. Jolly-Woodruff, Ju-Chuan Lin, Ralph A. Nelson, and Robert G. Steinke
Heat Transfer:	Ralph A. Nelson, Kemal Pasamehmetoglu, Norman M. Schnurr, Robert G. Steinke, and Cetin Unal
Neutronics:	Robert G. Steinke and Jay W. Spore
Code Development and Programming:	J. F. Dearing, John Mahaffy, C. Murray, and Susan J. Jolly-Woodruff; Paul T. Giguere Laura A. Guffee, Ju-Chuan Lin, Jay W. Spore, Robert G. Steinke, and Victor Martinez
Control Procedure:	Robert G. Steinke
Graphics:	Russell C. Johns and James F. Dearing; Victor Martinez, Jerry Valdez, and Michael R. Turner
Sample Problem:	Robert G. Steinke, James F. Lime, Henry J. Stumpf, Brent Boyack, and Jerry Valdez
Report Compilation:	Robert G. Steinke and Jerry Valdez
Composition:	Barbara Ritchie

In addition to those contributors listed above, we acknowledge all others who contributed to earlier versions of TRAC. In particular, the two-step numerics developed by John Mahaffy is a major part of TRAC. Dennis R. Liles contributed heavily to the thermal-hydraulics modeling and to the overall direction of MOD1 code development. Frank L. Addessio developed the steam-generator component, and Manjit S. Sahota developed the critical-flow model and the turbine component. Thad D. Knight provided direction for

improvements to TRAC based on assessment-calculation feedback and coordinated the development of the MOD1 Correlation and Models document. Richard J. Pryor, Sandia National Laboratories, and James Sicilian, Flow Science, Inc., provided major contributions to the code architecture. We also acknowledge useful discussions and technical exchanges with Louis M. Shotkin and Novak Zuber, United States Nuclear Regulatory Commission; Terrence F. Bott, Francis H. Harlow, David A. Mandell, and Burton Wendroff, Los Alamos National Laboratory; John E. Meyer and Peter Griffith, Massachusetts Institute of Technology; S. George Bankoff, Northwestern University; Garrett Birkhoff, Harvard University; and Ronald P. Harper, Flow Science Inc.

The TRAC-PF1/MOD1 User's Guide was written by Brent E. Boyack, Henry J. Stumpf, and James F. Lime, and much of the material from that manual is included in this document. We also thank all Los Alamos users and external users, both domestic and foreign, who supplied comments and corrections to this document. We are particularly indebted to the TRAC user communities in the United Kingdom who provided us with a review of the TRAC-PF1/MOD1 User's Guide containing many helpful suggestions and at Knolls Atomic Power Laboratory for their support and review of many new modeling options that were programmed in TRAC-PF1/MOD2. We also wish to thank the International Code Assessment and Applications Program (ICAP) participants who have suggested several new TRAC-P user guidelines in assessment reports we have received from them.

ACRONYMS

AEC	Atomic Energy Commission
AIChE	American Institute of Chemical Engineers
ANL	Argonne National Laboratory
ANS	American Nuclear Society
ASHRAE	American Society of Heating, Refrigeration, and Air-Conditioning Engineers
ASME	American Society of Mechanical Engineers
ATWS	Anticipated transient without scram
B&W	Babcock & Wilcox
BNL	Brookhaven National Laboratory
BWR	Boiling water reactor
C-E	Combustion Engineering
CCFL	Countercurrent flow limitation
CCTF	Cylindrical Core Test Facility, a PWR experiment facility in Japan
CHF	Critical heat flux
COBRA-TF	Coolant boiling in rod arrays, the two-fluid version
CSS	Constrained steady state
CVCS	Chemical and volume control system
ECC	Emergency core cooling or coolant
ECCS	Emergency-core-cooling system
EIES	Engineering and Industrial Experiment Station
EPRI	Electric Power Research Institute
FLECHT	Full-Length Emergency Cooling Heat Transfer, a PWR experiment facility at Westinghouse
FRG	Federal Republic of Germany
FSAR	Final Safety Analysis Report
GE	General Electric
HPSI	High pressure safety injection
HTC	Heat-transfer coefficient
HTFS	Heat Transfer and Fluid Flow Service
INEL	Idaho National Engineering Laboratory
JAERI	Japan Atomic Energy Research Institute
KAPL	Knolls Atomic Power Laboratory
LBLOCA	Large-break loss-of-coolant accident
LMFBR	Liquid-metal fast-breeder reactor
LOC	Loss of coolant
LOCA	Loss-of-coolant accident
LOCE	Loss-of-coolant experiment
LOFT	Loss-of-Fluid Test, a PWR experiment facility at INEL
LPSI	Low-pressure safety injection
LU	Lehigh University
LWR	Light-water reactor
NESC	National Energy Software Center
NPP	Nuclear power plant

ACRONYMS (cont)

NRC	United States Nuclear Regulatory Commission
NSAC	Nuclear Safety Analysis Center
NTIS	National Technical Information Service
ORNL	Oak Ridge National Laboratory
PBF	Power Burst Facility, a PWR fuel experiment at INEL
PNL	Pacific Northwest Laboratory
PWR	Pressurized water reactor
QA	Quality assurance
RELAP5	Reactor Leak and Power Safety Excursion code, the fifth major version of the code
RHS	Right-hand-side (of an equation)
RMS	Root-mean-square (averaging process)
ROSA	Rig of Safety Assessment, a series of LWR experiment facilities in Japan
SBLOCA	Small-break loss-of-coolant accident
SCTF	Slab Core Test Facility, a PWR experiment facility in Japan
SETS	Stability-enhancing two-step (numerical technique)
SE	Steam generator
SI	International system of units (metric)
SJC	Single-junction component
THTF	Thermal Hydraulic Test Facility, a PWR experiment at ORNL
TRAC	Transient Reactor Analysis Code
UCSP	Upper core-support plate
UKAEA	United Kingdom Atomic Energy Authority
UPTF	Upper Plenum Test Facility, a PWR experiment facility in FRG
US	United States

STANDARD NOMENCLATURE

Independent Variables

r	Radial coordinate in cylindrical geometry (m, ft)
t	Time (t)
θ	Azimuthal coordinate in cylindrical geometry (rad, deg)
x	Coordinate for one-dimensional geometry (m, ft)
z	Axial coordinate in cylindrical geometry (m, ft)

Other Variables

A	Area (m^2, ft^2)
c	Shear or friction coefficient in two-fluid equations (-)
c_p	Specific heat at constant pressure ($J \cdot kg^{-1} \cdot {}^\circ K^{-1}$, $Btu \cdot lb_m^{-1} \cdot {}^\circ F^{-1}$)
c_v	Specific heat at constant volume ($J \cdot kg^{-1} \cdot {}^\circ K^{-1}$, $Btu \cdot lb_m^{-1} \cdot {}^\circ F^{-1}$)
D	Diameter (m, ft)
e	Specific internal energy ($J \cdot kg^{-1}$, $Btu \cdot lb_m^{-1}$)
FA	Flow area (m^2, ft^2)
g	Acceleration caused by gravity ($m \cdot s^{-2}$, $ft \cdot s^{-2}$)
G	Mass flux, $\rho_m V_m$ ($kg \cdot m^{-2} \cdot s^{-1}$, $lb_m \cdot ft^{-2} \cdot s^{-1}$)
h	Specific enthalpy or heat-transfer coefficient ($W \cdot m^{-2} \cdot {}^\circ K^{-1}$, $Btu \cdot h^{-1} \cdot ft^{-2} \cdot {}^\circ F^{-1}$)
h_{lg}	Latent heat of vaporization ($J \cdot kg^{-1}$, $Btu \cdot lb_m^{-1}$)
H	Pump head, $\Delta P/\rho$ ($Pa \cdot m^3 \cdot kg^{-1}$, $lb_f \cdot ft \cdot lb_m^{-1}$)
k	Thermal conductivity ($W \cdot m \cdot {}^\circ K^{-1}$, $Btu \cdot h^{-1} \cdot ft. \times {}^\circ F^{-1}$), form-loss coefficient (-), pipe roughness (m, ft), or reactor multiplication constant (-)
m	Mass (kg, lb_m)
Nu	Nusselt number (-)
p	Pressure (Pa, psia) or power (W, $Btu \cdot h^{-1}$)
q	Heat-generation rate (W, $Btu \cdot h^{-1}$)
q''	Heat flux ($W \cdot m^{-2}$, $Btu \cdot h^{-1} \cdot ft^{-2}$)
q'''	Volumetric heat-generation rate ($W \cdot m^{-3}$, $Btu \cdot h^{-1} \cdot ft^{-3}$)
Q	Pump volumetric flow ($m^3 \cdot s^{-1}$, $ft^3 \cdot s^{-1}$)
R	Radius (m, ft) or neutronic reactivity (-)
Re	Reynolds number (-)
T	Temperature (°K, °F)

Other Variables

V	Velocity ($m \cdot s^{-1}$, $ft \cdot s^{-1}$)
vol	Hydrodynamic cell volume (m^3, ft^3)
We	Weber number (-)
X	Quality (-)

STANDARD NOMENCLATURE (cont)

α	Vapor volume fraction (-) or absorptivity (-)

Other Variables

Γ	Net volumetric vapor-production rate caused by phase change ($kg \cdot m^{-3} \cdot s^{-1}$, $lb_m.ft^{-3} \cdot s^{-1}$)
δ	Mean fuel-surface roughness (m, ft)
Δ	Increment (m, ft)
ε	Emissivity (-)
μ	Viscosity ($kg \cdot m^{-1} \cdot s^{-1}$, $lb_m.ft^{-1} \cdot s^{-1}$)
ρ	Microscopic density ($kg \cdot m^{-3}$, $lb_m.ft^{-3}$)
σ	Surface tension ($kg \cdot s^{-2}$, $lb_m.s^{-2}$) or Stefan-Boltzmann constant ($W \cdot m^{-2} \cdot {}^{\circ}K^{-4}$, $Btu \cdot h^{-1} \cdot ft^{-2} \cdot {}^{\circ}R^{-4}$)
τ	Shear stress ($kg \cdot m^{-1} \cdot s^{-2}$,$lb_m.ft^{-1} \cdot s^{-2}$)
ϕ^2	Two-phase friction-factor multiplier (-)
ω	Angular velocity ($rad \cdot s^{-1}$, rpm)
Ω	Pump-impeller angular velocity ($rad \cdot s^{-1}$, rpm)

Subscripts

a	Noncondensable-gas component
b	Bubble
c	Cladding
d	Droplet
f	Fuel or friction
g	Gas field or vapor
h	Hydraulic
i	Interface (liquid-vapor) quantity or one-dimensional cell in heat-transfer equations
j	One-dimensional cell index in hydrodynamics equations
l	Liquid field
lg	Liquid to vapor
m	Mixture quantities

1.0. INTRODUCTION

The Fortran 90 Modernized Transient Reactor Analysis Code (TRAC-M/F90) is an advanced best-estimate systems code for analyzing transients in pressurized water reactors and related neutronic-thermal-hydraulic systems. This manual is one of four documents that form the basic TRAC-M/F90 documentation set. It contains a general description of the code, descriptions of the control system and all component models, a detailed description of the input-data format, and both general and specific guidelines for system modeling and input-data file preparation. This document includes all information that is needed to prepare input data and execute the TRAC-M/F90 code.

This manual is written specifically for TRAC-M/F90, Version 3.0. In addition, we will indicate areas where the code differs from TRAC-M Fortran 77 (TRAC-M/F77), Version 5.5.2 and provide complete input specifications for both codes. Throughout this document, the terms "TRAC" and "TRAC-M" will indicate both TRAC-M/F90, Version 3.0 and TRAC-M/F77, Version 5.5.2. Unless otherwise indicated, the specifications and user guidelines presented here apply to both codes. Where confusion could exist with earlier members of the TRAC series of codes (e.g., TRAC-PF1/MOD2) or where TRAC-M/F90 and TRAC-M/F77 differ, we will explicitly identify the applicable code.

The other manuals in the TRAC-M/F90 documentation set are the Theory Manual (Ref. 1-1), the Programmer's Manual (Ref. 1-2), and the Developmental Assessment Manual. The Theory Manual discusses all of the algorithms and equations used in TRAC-M/F90, including the two-fluid mass, momentum, and energy conservation equations and constitutive equations such as interfacial drag and heat-transfer correlations. It discusses the one-dimensional (1D) and two-dimensional (2D) conduction and convection heat-transfer equations used for heat-transfer analysis and describes the core-reflood algorithms in detail. The TRACM/F90 Programmer's Manual gives detailed information concerning the structure of the code and a wealth of information that will be useful for the users who find it necessary to alter the code for their specific needs. The TRAC-M/F90 Developmental Assessment Manual describes the results of several assessments of TRAC-M/F90 against analytic and experimental tests that have been performed. These include a wide variety of integral and separate-effects experimental-test assessments. The developmental assessment of various TRAC-M/F90 code versions will be performed by the NRC and the results will be published in the future.

TRAC-PF1/MOD2 ("MOD") is the direct antecedent of TRAC-M/F90 and of TRAC-M/F77. This manual is based on the MOD2 User's Guide (Ref. 1-3). In Section 2-6 we summarize the key features of TRAC-M/F90 and TRAC-M/F77 and indicate the differences between them. Most of the development of TRAC-M/F90, Version 3.0 has involved a massive restructuring of TRAC's databases and data interfaces. Almost everything else in MOD2 that affects thermal-hydraulic modeling (including closure relations, flow process models, most special component models, fluid and material properties, reactor power logic, heat conduction, control system, and numerics) was carried over to TRAC-M/F90 (and to TRAC-M/F77). In fact, an important aspect of the development of TRAC-M/F90, Version 3.0 was null, or almost null, testing against an

extensive set of MOD2 results. TRAC-M/F90's databases are restructured into standard, portable, Fortran 90-derived types, and almost all arrays are dynamically allocated at runtime using standard Fortran 90 calls. This had, and will continue to have, far-reaching importance for all aspects of TRAC development. Also, the code's data interfaces were significantly improved with two related efforts: (1) full separation of the evaluation of terms in the flow equations from the solution of the resulting system of linear equations, resulting in an improved network solution for the field equations; and (2) improved inter-component communication, implemented as a system service. Full details on the database and data interface improvements in the code are given in the TRAC-M/F90 Programmer's Manual (Ref. 1-2).

This manual is structured as follows. Section 2.0. gives a general overview of the TRAC-M code, discusses the physical phenomena treated, summarizes the major changes between the PF1/MOD1 and PF1/MOD2 versions of the code, and describes current and planned versions of TRAC-M. Section 3.0. discusses the control procedures available in TRAC. An overview of all components is given in Section 4.0. Some general guidelines outlining the preliminary work that should be done and the data that should be collected before constructing an input-data file are presented in Section 5.0. This section is particularly important for first-time users. Input-data file preparation and the code's dump/restart capability are covered in Section 6.0. The input-data format is described here in detail. Section 6.0. will be referred to most often and may be the only section consulted regularly by the experienced user. Section 7.0. presents some detailed guidelines for various aspects of modeling the neutronic-thermal-hydraulic system. Some guidelines for executing the code and processing output are given in Section 8.0.

The appendices provide additional detailed information that is referred to in the body of the TRAC-M/F90 User's Manual. Appendix A provides a bibliography of reports documenting, verifying, and validating various versions of TRAC-P. Appendices B and C provide the user with information for reporting TRAC-M errors using a diagnostic check list and for providing TRAC-M/F90 User's Manual improvement suggestions. Appendix D describes the installation of TRAC-M. Appendices E, F, G, and H describe and annotate the steady-state and transient calculation TRACIN input-data files, TRCMSG message files, and TRCOUT output files of the Westinghouse three-loop pressurized-water-reactor (PWR) W3LOOP test problem. W3LOOP has an extensive model that provides many modeling examples to which the users can refer. A detailed explanation of the reactivity-feedback model in the W3LOOP test problem is provided in Appendix I. Appendix J describes how to remodel an accumulator (ACCUM) component with FILL and PIPE components and how the steam-generator (STGEN) components from the W3LOOP test problem were remodeled with heat-structure (HTSTR), PIPE, and TEE components. General and component graphics variables output by TRAC-M are described in Appendix K, and an explanation of warning and error messages that may be output during TRAC-M/F90 execution is provided in Appendix L. Appendix M gives the input specifications for a core-reflood mode that is available in TRAC-M/F77. The detailed information in these appendices and the descriptive tutorial in the body of this manual provide a storehouse of information to aid TRAC-M users in preparing their own input-data model and executing it successfully on a computer platform of their choice.

REFERENCES

1-1 J. W. Spore, J. Elson, S. J. Jolly-Woodruff, T. D. Knight, J.-C. Lin, J. Mahaffy, C. Murray, R. A. Nelson, K. O. Pasamehmetoglu, R. G. Steinke, and C. Unal, "TRAC-M/Fortran 90 (Version 3.0) Theory Manual," Los Alamos National Laboratory document LA-UR-00-910 (March 2000).

1-2 B. T. Adams, J. F. Dearing, P. T. Giguere, R. C. Johns, S. J. Jolly-Woodruff, J. Mahaffy, C. Murray, J. W. Spore, and R. G. Steinke, "TRAC-M/Fortran 90 (Version 3.0) Programmer's Manual," Los Alamos National Laboratory document LA-UR-00-803 (February 2000).

1-3 N. M. Schnurr, R. G. Steinke, V. Martinez, and J. W. Spore, "TRAC-PF1/MOD2 Code Manual: User's Guide," Los Alamos National Laboratory document LA-12031-M, Vol. 2; also NUREG/CR-5673, Vol. 2 (July 1992).

2.0. OVERVIEW OF TRAC-M

TRAC-M performs best-estimate analyses of loss-of-coolant accidents (LOCAs) and other accident and operational transients in pressurized light-water reactors (LWRs), as well as neutronic-thermal-hydraulic experiments in reduced-scale facilities. Models used include multidimensional two-phase flow, nonequilibrium thermo-dynamics, generalized heat transfer, reflood, and reactor kinetics. Automatic steady-state and dump/restart capabilities also are provided.

The partial differential equations that describe two-phase flow and heat transfer are solved by finite differences. The heat-transfer equations are evaluated using a semi-implicit time-differencing technique. The fluid-dynamics equations in the spatial 1D, 2D, and three-dimensional (3D) components use a multistep time-differencing procedure that allows the material Courant-limit condition to be exceeded. The finite-difference equations for hydrodynamic phenomena form a system of coupled, nonlinear equations that are solved by the Newton-Raphson iteration method. The resulting linearized equations are solved by direct matrix inversion. For the 1D network matrix, this is done by a direct full-matrix solver; for the multiple-vessel matrix, this is done by the capacitance-matrix method using a direct banded-matrix solver.

The number of reactor components in the problem and the manner in which they are coupled are arbitrary. Reactor hydraulic components in TRAC-M include PIPEs, PLENUMs, PRIZERs (pressurizers), PUMPs, TEEs, VALVEs, and VESSELs with associated internals. HSTR (heat structure) SLAB and ROD components are available to compute 2D conduction and surface-convection heat transfer in Cartesian and cylindrical geometries, respectively. FILL and BREAK components are used to apply the desired coolant-flow and pressure boundary conditions, respectively, for TRAC-M steady-state and transient calculations. There are also SEPD (Separator) and TURB (turbine, TRAC-M/F77 only) components, which are to be replaced in future TRAC-M/F90 development. The current status of the SEPD and TURB is indicated at appropriate places in this document. Additional component models that are under development are indiated later in this section.

The TRAC-M computer execution time is highly problem dependent and is a function of the total number of mesh cells, the maximum allowable timestep size, and the rate of the neutronic-thermal-hydraulic phenomena being evaluated. For TRAC-PF1 and later versions, stability-enhancing two-step (SETS) numerics in 1D hydraulic components allowed the material Courant limit to be exceeded. This allowed very large timesteps to be used in slow transients when only 1D hydraulic components are modeled. In TRAC-PF1/MOD2 and later versions, SETS numerics also has been applied to the multidimensional VESSEL component to allow the material Courant limit to be exceeded and very large timesteps to be used for all system models. This allows significant speedups of one or two orders of magnitude for slow-accident and operational transients when multidimensional VESSEL components need to be modeled.

The highly versatile TRAC-M code models most thermal-hydraulic experiments in addition to the wide variety of LWR system designs. The code's modularity allows better geometric simulations, more detailed models of physical processes, and reduced maintenance costs.

One of the output files written by TRAC-M contains graphics information that can be used to produce plots and movies with the XTV and XMGR5 (F90 only) visualization packages.

2.1. History

TRAC, an advanced best-estimate systems code for analyzing LWR accidents, was originally developed at the Los Alamos National Laboratory under the sponsorship of the Office of Nuclear Regulatory Research of the United States Nuclear Regulatory Commission (NRC). A preliminary TRAC version consisting of only 1D hydraulic components was completed in December 1976. Although this version was neither released publicly nor documented formally, it was used in TRAC-P1 development and formed the basis for the 1D loop-component modules. The first publicly released version, TRAC-P1, was completed in December 1977 (Ref. 2-1).

The TRAC-P1 program was designed primarily for the analysis of large-break loss-of-coolant accidents (LBLOCAs) in PWRs. However, because of its versatility, it could be applied directly to many analyses ranging from blowdowns in simple pipes to integral LOCA tests in multiloop facilities. A refined version, TRAC-P1A, was released to the National Energy Software Center (NESC) in May 1979 (Ref. 2-2). Although it treated the same class of problems, TRAC-P1A was more efficient than TRAC-P1 and incorporated improved hydrodynamic and heat-transfer models. It also was easier to implement on various computers. TRAC-PD2 (Ref. 2-3) contained improvements in reflood, heat-transfer, and numerical-solution methods. Although TRAC-PD2 is an LBLOCA code, it was applied successfully to simulating small-break transients and to the Three Mile Island incident.

TRAC-PF1 (Ref. 2-4) was designed to improve the ability of TRAC-PD2 to handle small-break loss-of-coolant accidents (SBLOCAs) and other transients efficiently. TRAC-PF1 had all of the major improvements of TRAC-PD2; in addition, it used a full two-fluid model with SETS in the 1D hydraulic components. The two-fluid model, in conjunction with a stratified-flow regime, handled countercurrent flow better than the drift-flux model used previously. The SETS numerics allowed the material Courant limit to be exceeded with large timesteps in slow transients. A 1D CORE component provided efficient calculations that the 3D VESSEL component was unable to provide. A noncondensable gas field was added to the 1D and 3D hydrodynamics. Significant improvements were made in the trip logic and the input. TRAC-PF1 was released publicly in July 1981.

A preliminary version of TRAC-PF1 without SETS1D numerics was used by the Idaho National Engineering Laboratory (INEL) to develop TRAC-BD1/MOD1 for boiling water reactor (BWR) analyses (Ref. 2-5). A jet-pump component, 1D reactor kinetics,

control-block procedure, and BWR correlations were added for appropriate modeling of BWR systems.

TRAC-PF1/MOD1 (Ref. 2-6) provided full balance-of-plant modeling through the addition of a general and flexible capability to model plant control systems. The STGEN component was added to allow a wider variety of feedwater connections, better modeling of steam-tube ruptures, and flexible heat-transfer modeling. New components were not required to model condensers, heaters, and pumps in the secondary system; however, a special turbine TURB component was added. The TRAC-PF1/MOD1 physical models also were modified; the evaporation-condensation model contains the most significant changes. During evaporation, both evaporation and flashing are modeled; during condensation, the liquid-side interfacial heat-transfer coefficient (HTC), which is sensitive to the flow regime, includes a special model for thermally stratified conditions. Wall heat transfer in the condensation and film-boiling regimes was improved. The motion equations include momentum transport caused by phase change. The momentum-flux terms were modified in the 3D VESSEL-component motion equations. This last modification can change substantially the computed pressure drop across a VESSEL component from that calculated by previous code versions. These modeling changes made TRAC-PF1/MOD1 a superior code, not only for small break and operational transients, but for large-break analyses as well.

TRAC-PF1/MOD2 was released in June 1990 with draft documentation for Version 5.3 in November 1990, followed by final documentation for a later improved Version 5.4 in July 1993 (Ref. 2-7). Versions of PF1/MOD2 contain numerous improvements over PF1/MOD1, including a generalized heat structure (HTSTR) SLAB and ROD component capability with fully implicit axial conduction heat transfer and inner- and outer-surface convection heat transfer, SETS3D numerics in the VESSEL component, flow-area ratios in the momentum-convection term to evaluate Bernoulli flow, improved constitutive models, better heat-transfer and drag correlations, an improved reflood model, and additional refinements in a variety of components. These upgrades are discussed in more detail in Section 2.5. During the development of TRAC-PF1/MOD2, its name was shortened to "TRAC-P."

Development of TRAC-M (the "M" stands for "modernized") began in 1997, using TRAC-PF1/MOD2 (or TRAC-P), Version 5.4.25 as its base code. The history and current status of TRAC-M are described in Section 2.6.

2.2. TRAC Characteristics

Some distinguishing characteristics of the TRAC-M code are summarized below. Within restrictions imposed by computer execution times, we have incorporated two-phase, thermal-hydraulic, state-of-the-art technology into the code.

2.2.1. Variable-Dimensional Fluid Dynamics

A 3D (x, y, z) Cartesian- and/or (r, θ, z) cylindrical-geometry flow calculation can be simulated within the reactor vessel, steam generator, and other hardware where

multidimensional flow effects need to be modeled. Flow within the coolant loops usually is modeled in one dimension. This allows an accurate evaluation of complex flow networks as well as local multidimensional flows. This is important in determining emergency core coolant (ECC) downcomer penetration during blowdown, refill, and reflood of a LOCA. Multidimensional plenum- and core-flow effects, and upper-plenum pool formation and core penetration during reflood can be treated directly.

2.2.2. Nonhomogeneous, Nonequilibrium Modeling

A full two-fluid (six-equation) hydrodynamic model evaluates gas-liquid flow, thereby allowing important phenomena such as countercurrent flow to be simulated explicitly. A stratified-flow regime has been added to the 1D hydrodynamics; a seventh field equation (mass balance) describes a noncondensable gas and/or steam field; and an eighth field equation tracks dissolved solute in the liquid field that can plated out on surfaces when solubility in the liquid is exceeded.

2.2.3. Flow-Regime-Dependent Constitutive Equation Package

The thermal-hydraulic equations describe the transfer of mass, energy, and momentum between the steam-liquid phases and the interaction of these phases with heat flow from the modeled structures. Because these interactions are dependent on the flow topology, a flow-regime-dependent constitutive-equation package has been incorporated into the code. Assessment calculations performed to date indicate that many flow conditions can be calculated accurately with this package.

2.2.4. Comprehensive Heat-Transfer Capability

TRAC-M can perform detailed heat-transfer analyses of the vessel and the loop components. Included is a 2D (r,z) treatment of fuel SLAB or ROD component. Heat conduction with dynamic fine-mesh rezoning resolves both bottom-reflood and falling-film quench fronts. Heat transfer from the fuel rods and other structures is calculated using flow-regime-dependent HTCs obtained from a generalized boiling curve based on a combination of local conditions and history effects. Inner- and/or outer-surface convection heat-transfer and a tabular or point-reactor kinetics with reactivity feedback volumetric power source can be modeled.

2.2.5. Component and Functional Modularity

The TRAC-M model is completely modular by component. The components in a calculation are specified through input data; available components allow the user to model virtually any PWR design or experimental configuration. Thus, TRAC-M has great versatility in its range of applications. This feature also allows component modules to be improved, modified, or added without disturbing the remainder of the code. TRAC-M component modules currently include BREAKs, FILLs, HTSTR SLABs and RODs, PIPEs, PLENUMs, PRIZERs, PUMPs, SEPDs, TEEs, TURBs (TRAC-M/F77 only), VALVEs, and VESSELs with associated internals (downcomer, lower plenum, reactor

core, and upper plenum). See Sections 2.6.1. through 2.6.3. for the current status of the SEPD and TURB components.

The TRAC-M program is also modular by function; that is, the major aspects of the calculations are performed in separate modules. For example, the basic 1D hydrodynamics solution algorithm, wall-temperature field solution algorithm, HTC selection, and other functions are performed in separate sets of routines that can be accessed by all component modules. This modularity allows the code to be upgraded readily with minimal effort and potential for error as improved correlations and test information become available.

2.3. Physical Phenomena Considered

As part of the detailed modeling in TRAC-M, the code can simulate physical phenomena that are important in LB- and SBLOCA analyses, such as the following:

1. ECC downcomer penetration and bypass, including the effects of countercurrent flow and hot walls;
2. lower-plenum refill with entrainment and phase-separation effects;
3. bottom-reflood and falling-film quench fronts;
4. multidimensional flow patterns in the reactor-core and plenum regions;
5. pool formation and countercurrent flow at the upper-core support-plate (UCSP) region;
6. pool formation in the upper plenum;
7. steam binding;
8. average-rod and hot-rod cladding-temperature histories;
9. alternate ECC injection systems, including hot-leg and upper-head injection;
10. direct injection of subcooled ECC water, without artificial mixing zones;
11. critical flow (choking);
12. liquid carryover during reflood;
13. metal-water reaction;
14. water-hammer pack and stretch effects;
15. wall friction losses;
16. horizontally stratified flow, including reflux cooling,
17. gas or liquid separator modeling;
18. spacer grids in fuel-rod assemblies;
19. noncondensable-gas effect on evaporation and condensation;
20. dissolved-solute tracking in liquid flow;
21. reactivity-feedback effects on reactor-core power kinetics;
22. two-phase bottom, side, and top offtake flow of a tee side channel; and
23. reversible and irreversible form-loss flow effects on the pressure distribution.

2.4. Restrictions on the Use of TRAC-M

TRAC-M currently is not appropriate for the analysis of transients in BWRs. Beginning with a preliminary version of the TRAC-P1 code, a related but separate TRAC code for BWR applications (Ref. 2-5) was developed at INEL. As indicated in Section 2.6.3., a BWR capability is to be developed for TRAC-M/F90.

The TRAC-M code is not appropriate for transients in which there are large changing asymmetries in the reactor-core power such as would occur in a control-rod-ejection transient. Neutronics are evaluated on a core-wide basis by a point-reactor kinetics model with reactivity feedback, and the spatially local neutronic response associated with the ejection of a single control rod cannot be modeled. A developmental version of TRAC-P coupled to the NESTLE 3D nodal kinetics code is available if such effects need to be modeled (Ref. 2-8).

The typical system model cannot be applied directly to those transients in which one expects to observe thermal stratification of the liquid phase in the 1D components. The VESSEL component can resolve the thermal stratification of liquid only within the modeling of its multidimensional noding when horizontal stratification is not perfect.

TRAC-M does not evaluate the stress/strain effect of temperature gradients in structures. The effect of fuel-rod gas-gap closure due to thermal expansion or material swelling is not modeled explicitly. TRAC-M can be useful as a support to other, more detailed analysis tools in resolving questions such as pressurized thermal shock.

2.5. Changes from TRAC-PF1/MOD1

Numerous improvements were made to TRAC-P between its PF1/MOD1 and PF1/MOD2 versions. These include the following:

1. The PF1/MOD2 models and correlations are more defensible.
2. PF1/MOD2 runs faster than PF1/MOD1. Depending on the type of transient and system-model noding, PF1/MOD2 can execute as much as several orders of magnitude faster than can PF1/MOD1.
3. The improved post-CHF heat-transfer and interfacial models accurately simulate separate-effects tests.
4. PF1/MOD2 has an improved core reflood model based on mechanistic and defensible models.
5. Improved constitutive models exist for downcomer penetration, upper-plenum de-entrainment, hot/cold-leg ECC injection, vertical stratification in the VESSEL component, and condensation and evaporation in the presence of noncondensables.
6. A generalized HTSTR component capability that allows the user to model complicated geometry accurately has been implemented. A 2D power distribution can be defined by an input-specified 2D power distribution or by signal-variable- and control-block-defined node-wise powers in the 2D power distribution.

7. An improved valve model based on experimental data for partially closed valves was implemented.
8. Improved VESSEL-component numerics that eliminate mass errors, even at large timestep sizes that can occur in small breaks or operational transients, was implemented.
9. An offtake model is available in PF1/MOD2 to simulate the effect of small breaks in the bottom, top, or side of a pipe on two-phase flow accurately.
10. The American Nuclear Society (ANS) 1979 Decay Heat Standard was implemented as a default model in PF1/MOD2.
11. The countercurrent-flow limitation (CCFL) model was implemented in both the 1D and 3D VESSEL components.
12. An improved subcooled boiling model was implemented based on published correlations.
13. The momentum-convection term was improved with flow-area ratios to conserve Bernoulli-flow reversible form losses resulting from flow-area change.
14. The external thermocouple model, developed by the United Kingdom Atomic Energy Authority (UKAEA), was implemented.
15. A fully implicit, axial-conduction, heat-transfer solution algorithm, developed by the Japan Atomic Energy Research Institute (JAERI), was implemented.
16. 3D gravitational components were programmed in the VESSEL-component motion equations to model an arbitrary orientation of this multidimensional component.
17. An SEPD component was added to simulate the carryover and carryunder flows of a mechanistic separator model.
18. The capacitance-matrix method was implemented to efficiently evaluate with direct vessel-matrix inversion numerics a multiple VESSEL-component model and/or a VESSEL component with 1D-component source-connection junctions to different axial levels.
19. The first-order-lag, first-order lead-lag, and second-order-lag Laplace-transform control blocks for evaluating first- and second-order ordinary differential equations had their explicit-solution numerics replaced by state-transition method analytic-solution numerics to improve their accuracy, numerical stability, and calculative efficiency.
20. An HTSTR SLAB or ROD component can be convection heat-transfer coupled to multiple 1D and 3D hydraulic components; multiple HTSTR SLAB and/or ROD components can have their power source defined by a single point-reactor kinetics solution.
21. Input-specified design factors can be applied to the wall friction and heat-transfer coefficients.
22. Input data and output results can be specified optionally in SI (metric) or English units.
23. The BREAK-component generalized-fluid pressure boundary condition has the option of being defined by signal variables or control blocks like the FILL-component coolant-flow boundary condition.

24. A new constrained steady-state (CSS) type-5 controller was implemented for HTSTR SLAB and ROD components.
25. Better initial-solution estimate temperature and velocity distributions can be defined conveniently by the hydraulic-path, steady-state initialization procedure to converge the steady-state solution with less calculative effort.
26. A procedure was implemented for monitoring energy conservation in all components.

The ACCUM, CORE (1D reactor core), and STGEN components have been eliminated from TRAC-M because now there are better ways to model their equivalence. This eliminates their continued need for maintenance and reduces TRAC-M's computer-memory requirement. The CORE component was eliminated when the heat-structure fuel-rod capability was removed from the PF1/MOD1 VESSEL component and was provided as a new PF1/MOD2 heat-structure ROD and SLAB component that could be heat-transfer coupled to both 1D and 3D hydraulic components. Programming SETS3D numerics in the PF1/MOD2 VESSEL component meant the timestep size could exceed the material Courant limit when the VESSEL component in one, two, or three dimensions modeled the reactor-core region. The ACCUM component was eliminated because the PIPE component with option IACC = 2 models its equivalent. The STGEN component was eliminated because of the complexity of its programmed form (which is prone to error when being maintained) and because its heat-transfer modeling is more flexible with HTSTR ROD and SLAB components. Eliminating the STGEN component also eliminated its CSS type-4 controller, where the capability is replaced by the CSS type-5 controller for HTSTR components. The control-panel-vector option for outputting control-panel-like information for the reactor operator also has been eliminated. This option was no longer being used or maintained.

2.6. TRAC-M

The base code for the TRAC-M development effort is TRAC-PF1/MOD2, Version 5.4.25 (in the course of TRAC-PF1/MOD2 development, the code's name was officially shortened to "TRAC-P"). TRAC-M was first developed as a series of Fortran 77 ("F77") versions ("TRAC-M/F77"), with the main goals of increasing the portability and providing a good base for subsequent Fortran 90 ("F90") development ("TRAC-M/F90").

TRAC-M/F77, Version 1.10 is an important branch point: it is the base code for all TRAC-M/F90 versions and for a new reflood model (in F77) that analyzes simultaneous top-down and bottom-up quenching.

We summarize here the main features that distinguish the various versions of TRAC-M and indicate future areas of development. The items mentioned here that are included in either TRAC-M/F77, Version 5.5.2 or in TRAC-M/F90, Version 3.0 are described in greater detail in the appropriate sections of this document.

2.6.1. TRAC-M/F77

TRAC-M/F77 development is currently at Version 5.5.2. It has the following characteristics:

- Portable Fortran 77.
- Same numerics, models, and correlations as TRAC-P, Version 5.4.25, with the following exception:
  - addition of a new core-reflood model that can analyze simultaneous top-down and bottom-up quenching (Refs. 2-9 and 2-10) and an optimization methodology for development of closure relations (Ref. 2-9).

    Note that use of the SEPD-component model, which was brought over from TRAC-P, is not recommended. Also, the TURB component model, also inherited from TRAC-P, had received minimal support over its years in TRAC-P. Both the SEPD and TURB components are to be replaced in future TRAC-M/F90 versions (post-3.0).
- Removal of the graphics-output file TRCGRF, which was used in older code versions for graphics post-processing. All graphics output is written to files XTVGR.T and XTVGR.B.

2.6.2. TRAC-M/F90

The base code version for this document is Version 3.0, which has the following characteristics:

- Portable Fortran 90, with a complete rewrite of the databases, using F90-derived types and dynamic memory allocation.
- A rewrite of the network solution procedure for the fluid field equations (the underlying SETS numerics remain unchanged).
- Introduction of System Services for intercomponent communication.
- Removal of the TRAC-P TURB component. The turbine capability is to be reintroduced in future TRAC-M/F90 versions (post-3.0).
- Removal of the thermal-radiation-enclosure heat-transfer model from the HTSTR component. The "hooks" that call the radiation model are retained in commented-out form.
- Removal of the graphics-output file TRCGRF, which was used in older code versions for graphics post-processing. All graphics output is written to file TRCXTV (which combines the information in TRAC-M/F77 files XTVGR.T and XTVGR.B).

Note that Version 3.0 of TRAC-M/F90 has the same outdated SEPD component as TRAC-P and TRAC-M/F77.

2.6.3. Future Development

TRAC-M/F77 is currently at Version 5.5.2. Currently, the only identified future improvement to TRAC-M/F77 is the addition of improved graphics output for the point kinetics model (and a minor error correction for that model). The main path for future TRAC development is in the TRAC-M/F90 series. Major aspects of ongoing TRAC-M/F90 development include the following:

- Incorporation of BWR-modeling capabilities similar to those of TRAC-B. This includes addition of the following:
  - Vessel-channel (CHAN) component with leak paths.
  - Jet Pump (JETP) component.
  - Heater component.
  - TURB component, replacing the TRAC-P TURB.
  - SEPD component, replacing the TRAC-P SEPD.
- Separation of TRAC-M into an input engine (TracInp) and a computational engine (TracCmp). This will impact the procedure for running the code, which is described in Section 5.1.3. An overview of the forthcoming input separation logic is also given in Section 5.1.3.
- Development of a single-junction component (SJC), which will be used by the forthcoming leak path logic for the CHAN component and will facilitate RELAP-5 style modeling.

REFERENCES

2-1 Safety Code Development Group, "TRAC-P1, An Advanced Best-Estimate Computer Program for LWR Analysis," Los Alamos National Laboratory report LA-7279-MS (June 1978).

2-2 Safety Code Development Group, "TRAC-P1A, An Advanced Best-Estimate Computer Program for PWR Analysis," Los Alamos National Laboratory report LA-7777-MS (NUREG/CR-0665) (May 1979).

2-3 Safety Code Development Group, "TRAC-PD2, An Advanced Best-Estimate Computer Program for Pressurized Water Reactor Loss-of-Coolant Analysis," Los Alamos National Laboratory report LA-8709-MS (NUREG/CR-2054) (April 1981).

2-4 Safety Code Development Group, "TRAC-PF1: An Advanced Best-Estimate Computer Program for Pressurized Water Reactor Analysis," Los Alamos National Laboratory report LA-9944-MS (NUREG/CR-3567) (February 1984).

2-5 D. Taylor, "TRAC-BD1/MOD1: An Advanced Best-Estimate Computer Program for Boiling Water Reactor Transient Analysis," EG&G Idaho, Inc. report NUREG/CR-3633 (April 1984).

2-6 Safety Code Development Group, "TRAC-PF1/MOD1: An Advanced Best-Estimate Computer Program for Pressurized Water Reactor Thermal-Hydraulic Analysis," Los Alamos National Laboratory report LA-10157-MS (NUREG/CR-3858) (July 1986).

2-7 Safety Code Development Group, "TRAC-PF1/MOD2 Code Manual: Vol. I Theory Manual (draft), Vol. II User's Guide, Vol. III Programmer's Guide, and Vol. IV Developmental Assessments Manual (draft)," LA-12031-M (NUREG/CR-5673) (July 1993).

2-8 P. L. Knepper, "Evaluation of Fuel Temperature Feedback Mechanisms using TRAC-PF1/MOD2, Version 5.4.25, with NESTLE," Los Alamos National Laboratory document LA-UR-98-3965 (December 1998).

2-9 R. A. Nelson, Jr., D. A. Pimentel, S. J. Jolly-Woodruff, and J. W. Spore, "Reflood Completion Report, Volume I: A Phenomenological Thermal-Hydraulic Model of Hot Rod Bundles Experiencing Simultaneous Bottom and Top Quenching and an Optimization Methodology for Closure Development," Los Alamos National Laboratory report LA-UR-98-3043 (April 1998).

2-10 B. E. Boyack, J. F. Lime, D. A. Pimentel, J. W. Spore, and T. D. Knight, "Reflood Completion Report, Volume II: Developmental Assessment of a New Reflood Model for the TRAC-M/F77 Code," Los Alamos National Laboratory report LA-UR-98-3043 (April 1998).

3.0. CONTROL PROCEDURE

If TRAC-M is to simulate the operating control procedure during a PWR transient, a method is needed for defining the plant's mode of operation and control. This is done by specifying a control procedure to adjust component hardware actions according to the state of the system and its operational plan. A control procedure must model manual control by the operator, automatic control by regulating hardware, and abnormal hardware behavior. This procedure involves setting up the logic for initiating adjustable hardware actions when specified conditions occur based on system-parameter values and the operational plan. For example, in manual or automatic control, when steam-line pressure rises above or falls below specified pressure setpoint values, a valve is opened or closed, respectively. Abnormal hardware behavior might consist of opening a valve in a line connected to an atmospheric-pressure boundary condition to simulate a pipe break.

The control procedure in TRAC-M is general and flexible and provides the user with the tools needed to model a spectrum of predefined or responsive control scenarios. It is left to the user to define the specific control procedure for TRAC-M to follow. However, the generality and flexibility provided by the defining form for the control procedure requires the user to think through the modeling details and control specifications to construct the desired control-procedure model. A new user may find the process difficult at first, but with examples and experience, it should become relatively straightforward to specify a control procedure that implements the desired control logic.

Four basic building blocks are used in modeling a control procedure for TRAC-M steady-state and transient calculations: signal variables, control blocks, trips, and component-action tables. In the following five sections of this section, these four basic tools and the multipass control-parameter evaluation procedure for evaluating them are described. The TRAC-M control procedure for evaluating steady-state calculations will be described in the final section. In Section 7.0., we will show with examples how these basic building-block tools can be used to construct control procedures of varying complexity and purpose and how a control procedure interacts with the hardware component it controls through a component-action table specified by the component-input data. We also refer the reader to Appendix E, where an input-data TRACIN file with the control procedure for a three-loop full-plant model is provided and described with accompanying annotation.

Detailed input specifications for TRAC's Control System are given in Section 6.0. As described in Section 6.0., the control parameters can be initialized from TRAC's text input file or from a binary file (dump file) written by a previous run.

3.1. Signal Variables

Signal variables are modeled-system parameters with real values that the user selects as signals for application in the TRAC-M control procedure. Signal variables also may be specified to provide their parameter values for printed or plotted output. The user assigns to each signal-variable parameter a positive-valued identification (ID) number

for referencing its application in TRAC-M. Their values normally are defined by TRAC-M from the modeled system in the order of increasing magnitude of their ID numbers (a multipass control-parameter evaluation can override this; see Section 3.5.). The following are a few examples of signal-variable parameters: problem time, pressure, temperature, density, internal energy, velocity, mass flow, solute concentration, reactor-core power, pump-impeller rotational speed, and valve flow area or stem position. Table 6-1 lists the 88 different signal-variable parameters available to the TRAC-M user. Table 6-1 is presented in Section 6.0. rather than here for user convenience when the input-data model is prepared using the Section 6.0. input-data format description. Some of the signal-variable parameters are definable only for specific component types; for example, pressure is only defined in 1D and 3D hydraulic components, and the reactor-core power is defined only in powered ROD and SLAB HTSTR components. Some signal-variable parameters are available only when special code options are exercised; for example, reactivity-feedback parameter numbers 46 through 54 default to zero values unless the reactivity-feedback model is evaluated by the specified HTSTR component. The system-model location where a signal-variable parameter is defined is in a specific component or trip. For component parameters, some signal-variable parameters require defining their location at a specific mesh cell, mesh-cell interface, or heat-transfer node. Their definition also may span a range of such locations to determine their maximum, minimum, average, or difference in space or time value. Specific details and examples of how such definitions are specified can be found in Sections 6.3.5.3. and 7.3., Appendix E, and in the TRAC-M/F90 Theory Manual.

The values of signal-variable parameters are defined by TRAC-M at the beginning of each timestep based upon the state of the modeled system at the beginning of the timestep. These values are available for input into the control procedure where evaluated actions are applied as an unchanging component hardware state or feature value over the time interval of the next timestep to be evaluated. This step-wise variation in the defined hardware-action state or feature value of the component can result in a fractional timestep delay for initiating and varying control-procedure actions by TRAC-M. The timing error in this numerical-evaluation procedure is cumulative. For significant OFF/ON actions (such as initiating the opening of a closed valve), this timing error can be minimized by defining trip-initiated timestep data cards (Section 6.3.5.6.) for the action's controlling trip. The TRAC-M timestep size is limited by such a trip to complete the timestep when the trip signal is expected (based on linear extrapolation) to cross its setpoint value for changing the OFF/ON set status of the trip (see Section 3.3. for a trip description).

3.2. Control Blocks

Control blocks are function operators that operate on zero to three input-parameter signals to determine an output-parameter signal. The number of input-parameter signals depends on the function operator selected. Table 6-2 lists the 66 different control-block function operators available in TRAC-M. The table is presented in Section 6.0. rather than here for user convenience when the input-data model is prepared using the Section 6.0. input-data format description. The input-parameter signal to a control block can be a signal variable or the output-parameter signal of a control block (including

itself) with a real or logical (0.0 or 1.0) value. The value of the input-parameter signal is from the signal variable or control block's previous evaluation.

Control block ID numbers are negative valued to distinguish them from signal-variable ID numbers. They are evaluated by TRAC-M in the order of increasing magnitude of their ID numbers. Specifying an input signal for a control block with a larger-magnitude control-block ID number than the ID number of the control block being evaluated may result in the input signal's value being based on the previous rather than present timestep is the beginning-of-timestep state. That is because the input-signal control block with a larger-magnitude ID number would not have been evaluated yet for this timestep. The multipass control-parameter evaluation procedure, discussed later in Section 3.5., provides a means for evaluating signal variables, control blocks, and trips in an order different from the default order, which is based on the increasing magnitude of their ID numbers.

The desired logic of a control procedure can be defined and evaluated by coupling control-block function operators in series and/or in parallel with a control-logic network. Modeled-system parameters defined by signal variables usually provide input signals for some if not all of the control blocks. The initial value of a control block's output signal is input specified by CBCON2 $\neq$ 0.0 or evaluated internally by TRAC-M based upon assumed initial steady-state conditions of the input-specified modeled system. The user specifies CBCON2 $\neq$ 0.0 through input except for control-block function numbers 11, 26, 30, 51, and 59, where CBCON2 defines a function parameter or cannot define the control block's initial value. A control block that is implicitly coupled to itself through its input/output signals may be in a signal loop of control blocks, all of which TRAC-M cannot initialize internally. TRAC-M provides a warning message when this is encountered and aborts the calculation after all input data have been processed. The user can remedy this by specifying CBCON2 $\neq$ 0.0 to initialize the output signal from one of the control blocks in the signal loop. The desired output signal from a control-logic network usually is from the final control block in the coupled control-block evaluation procedure.

3.3. Trips

A trip is an ON/OFF switch that can be used to decide when to evaluate a component hardware action, to define a ±1.0 or 0.0 (ON or OFF) set-status signal for application within a control procedure (such as a switch signal for logic-gate operator control blocks), or to define a blocking or coincidence trip (when combined with other trip set-status values). When the controlling trip for a component hardware action is ON (its set status value is ±1.0), the component action is evaluated at the beginning of each timestep. Its action value is constant during the timestep, but it may vary from timestep to timestep. When the controlling trip is OFF (its set status value is 0), the component action is not evaluated at each timestep and the action value remains constant at its previously evaluated (or initially defined by ISET) state. The ON set status for a trip has two forms: $ON_{forward}$ and $ON_{reverse}$ with set-status values +1.0 and -1.0, respectively. The OFF set status has the value 0.0. A trip-controlled component hardware action is evaluated for both of these ON set-status states. The $ON_{forward}$ or $ON_{reverse}$ set-status

state determines the direction for evaluating the component-action table. The change in the component-action table's abscissa-coordinate value during the previous timestep is multiplied by the controlling trip's ISET set-status value to define the evaluated change for interpolating the new component-action value from the table. For a positive abscissa-coordinate value change, $ON_{forward}$ moves to a higher abscissa-coordinate value, and $ON_{reverse}$ moves to a lower abscissa-coordinate value to interpolate the new component-action value, and vise versa for a negative change. Further details on how the set status of a controlling trip affects the evaluation of its component-action table are given in the next section.

Associated with the input specification of a trip are the trip-signal definition and setpoint values. A trip signal is user specified to be a signal variable or control block (signal-variable trip), an arithmetic-operator expression operating on signal-variable or control-block signals (signal-expression trip), or the sum or product of the set status of two or more trips (trip-controlled trip). Setpoints are values of the trip signal that separate the value range of the trip signal into subranges. Associated with each subrange is a set-status label for the subrange $ON_{forward}$, OFF, or $ON_{reverse}$. The value of the trip signal and the input-specified setpoint values determine in which subrange the trip signal lies. This, in turn, determines the set-status value and label for the trip and whether the component actions controlled by the trip are to be evaluated. The trip-signal range is input defined with two or three subranges from which 10 different combinations of labels and subranges can be selected by the user. The trip-signal range can be further divided into four or more subranges by defining a trip-controlled trip.

Two other trip parameters need to be input specified: setpoint delay times and flags for applying optional setpoint factor tables. When the trip signal crosses a setpoint value, TRAC-M changes to the new subrange set status after the specified setpoint delay time. This enables the user to model the actual time delay of signal transmission and initiation of hardware-action movement. Setpoint factor tables enable the user to vary the input-specified setpoint values by applying table-evaluated factors to them. The actual variation in control-procedure setpoints resulting from electronic drift of automatic-control hardware or operator timing when performing manual adjustments can be modeled with these tables.

Trip control is provided for generating restart-data edits to the TRCDMP file, terminating the TRAC-M calculation, and implementing a special set of timestep data for a DTEND time interval. These actions are done by TRAC-M at the end of the timestep when a trip so defined was set ON at the beginning of the timestep. After using the special set of timestep data for DTEND seconds, TRAC-M returns to the regular timestep data it would have been using at that time. This special timestep data option also has the special feature of limiting the timestep size to complete the timestep when the trip signal is expected (based on linear extrapolation) to cross its setpoint value for changing to either an OFF or ON set status.

The user assigns each trip an ID number to reference the trip in the control-procedure specification. A trip ID number can be either positive or negative valued. Only trips with negative-valued ID numbers are evaluated at the beginning of each timestep during a

steady-state calculation; trips with positive-valued ID numbers are not evaluated during a steady-state calculation and remain at their input-specified ISET set status throughout a steady-state calculation. During a transient calculation, all trips are evaluated for each timestep.

3.4. Component-Action Tables

Modeling the adjustable hardware action of a component is done by a component-action table. The component-action table and the ID number of the trip that controls its evaluation are specified in the component-input data. Specifying a zero ID number for the trip indicates there is no trip control. Without trip control, the component-action table is evaluated at the start of every timestep during a transient calculation. During a steady-state calculation, component-action tables are not evaluated at the start of a timestep unless they are trip controlled and their controlling trip's set status is ON.

The component-action table defines the adjustable hardware action as a tabular function of an independent variable defined by a signal variable or control block. When the component-action table is input specified with no tabular data, the independent variable defines the dependent variable (the adjustable hardware action) directly as if the table defined a one-to-one relationship. The input specification of component-action table data for the input-data TRACIN file is presented in Section 6.3.6. The different types of adjustable hardware actions and the components for which they may be applied are shown in Table 3-1. The independent variable is defined by either the absolute or relative value of the signal variable or control block. The independent variable's relative value is the sum of the change in its signal variable or control block over each timestep that the table is evaluated. When the component-action table is trip controlled and has a relative-value independent variable, the trip set status ISET is applied as a factor to the change in the signal variable or control block before summing for each evaluated timestep. This ISET = ±1.0 set-status factor (for the $ON_{forward}$ and $ON_{reverse}$ set status) causes different directions of abscissa-coordinate direction movement when evaluating a trip-controlled component-action table that has a relative-value independent variable. In TRAC-M, summing the change in the independent variable (which has the set-status ISET factor applied to the change when the component-action table is trip controlled) is achieved by shifting all of the abscissa-coordinate values in the table by the independent-variable change amount such that the linearly interpolated point in the able maintains an abscissa-coordinate value of zero after each evaluated timestep. This is done internally and will not be noticed by the TRAC-M user unless he observes the shift in the abscissa-coordinate values of the table when it is input-data echoed to the TRCOUT file at the start of a restart calculation. The zero-abscissa coordinate value corresponds to the last interpolated component-action table location. This defining form requires that the input-specified form of a component-action table with a relative-value independent variable have an abscissa-coordinate value of zero at the table's linearly interpolated value of the initial hardware-action state.

TABLE 3-1
ADJUSTABLE-HARDWARE COMPONENT ACTIONS

Component Actions	Components
Pressure and fluid-state boundary condition	BREAK
Velocity or mass-flow and fluid-state boundary cond.	FILL
Reactor-core programmed reactivity or neutronic power	ROD and SLAB HTSTR
Reactor-core axial-power shape	ROD and SLAB HTSTR
Energy deposition directly in the coolant	PIPE, TEE, TURB, SEPD
Energy generation in the hydro-component wall	PIPE, PUMP, TEE, VALVE, SEPD
Pump-impeller rotational speed	PUMP
Turbine power demand	TURB
Valve flow-area fraction or relative stem position	VALVE

The rate factor from an assigned rate-factor table also can be applied to the absolute- and relative-value forms of the component-action table's independent variable. Generally, a rate factor is applied to the relative-value form, and the magnitude of the rate factor changes the rate of abscissa-coordinate direction movement when the component-action table is evaluated. The numerical-value sign of the rate factor, as with the set-status ISET factor from a controlling trip, can be used to control the direction of interpolated movement in the component-action table. See in the TRAC-M/F90 Theory Manual for further information on rate-factor tables.

Figure 3-1 illustrates how signal variables, control blocks, trips, and component-action tables in the TRAC control procedure (shown within the dashed-line box) couple to the TRAC-M model of an overall PWR-plant system (shown within the solid-line box). The TRAC-M model of the PWR-plant system consists of the component description of the physical-system hardware model (pipes, valves, pumps, reactor vessel, etc.) and the mass, momentum, and energy state of the coolant (density, velocity, pressure, temperature, etc.) and structure (temperature). Input for the control procedure comes from input specifications that define the mode of operation and control of the plant system and from TRAC-model parameters, which have their values monitored by signal variables. Signal variables also monitor the signal and set status of trips. Control blocks and trips require signal variables and control blocks to define their input. All three provide parameter information for evaluating the component-action tables. The component-action table results then couple back to the TRAC-M PWR plant-system mode by defining the component hardware actions they regulate. The arrows in Fig. 3-1 show the direction of parameter-information flow in the control procedure and in its coupling to the TRAC-M model.

3.5. Multipass Control-Parameter Evaluation Procedure

The control procedure is evaluated at the beginning of each timestep during the prep stage of the TRAC-M calculation. First signal variables, then control blocks, and finally trips are evaluated before evaluating the component-action tables. The individual items for the first three are evaluated in the order of increasing magnitude of their ID numbers (two trips with identical magnitude ID numbers differing only in numerical sign are evaluated in the order in which they were specified in the TRACIN file). The above order of evaluation is by default because, in general, signal variables are evaluated based on the beginning-of-timestep solution state of the TRAC-M model, control blocks are evaluated based on signal variables and control blocks with lesser magnitude ID numbers, trips are evaluated based on signal variables and control blocks, and component-action tables are evaluated based on signal variables, control blocks, and trips. In such a single-pass control-parameter evaluation procedure, normally all their evaluations give results consistent with the beginning-of-timestep solution state.

Exceptions to this occur when signal variables define the signal or set status of trips or when control blocks, defining the input signal to control blocks, have ID numbers with equal or greater magnitude than the ID number of the control block to which they define the input signal. This results in their values being based on the previous beginning-of-timestep solution state. A multipass control-parameter evaluation procedure is provided to enable the TRAC-M user to deal with these exceptions so that their results can be consistent with the beginning-of-timestep solution state if desired. During each evaluation pass of signal variables, control blocks, and trips, the user specifies a subrange of ID numbers for each that TRAC-M is to evaluate during that evaluation pass. This allows the above exceptions to be handled differently so that ID-number subranges can be evaluated in a different order on different evaluation passes. This gives the user control over evaluating signal variables, control blocks, and trips based on either the present or previous beginning-of-timestep solution state. This multipass procedure also allows coupled control-block signal loops to be evaluated a user-specified number of multipass interactions to approximate their implicitly coupled solution better.

3.6. Control Procedure for Steady-State Calculations

TRAC performs a transient calculation by successively evaluating the end-of-timestep solution state for discrete timesteps and stepping forward in time. This same procedure is followed when evaluating a steady-state calculation but with added internal-control features applied. Steady-state calculations generally are performed to provide the initial conditions for a transient calculation restarted from a steady-state calculation TRCDMP-file restart-data edit.

There are three types of steady-state calculations: generalized, constrained, and static check. A generalized steady-state (GSS) calculation asymptotically evaluates the time-independent steady-state solution of a modeled system where adjustable-hardware actions are held constant at their input-specified values. A constrained steady-state (CSS) calculation is evaluated in the manner of a GSS calculation but with the addition of

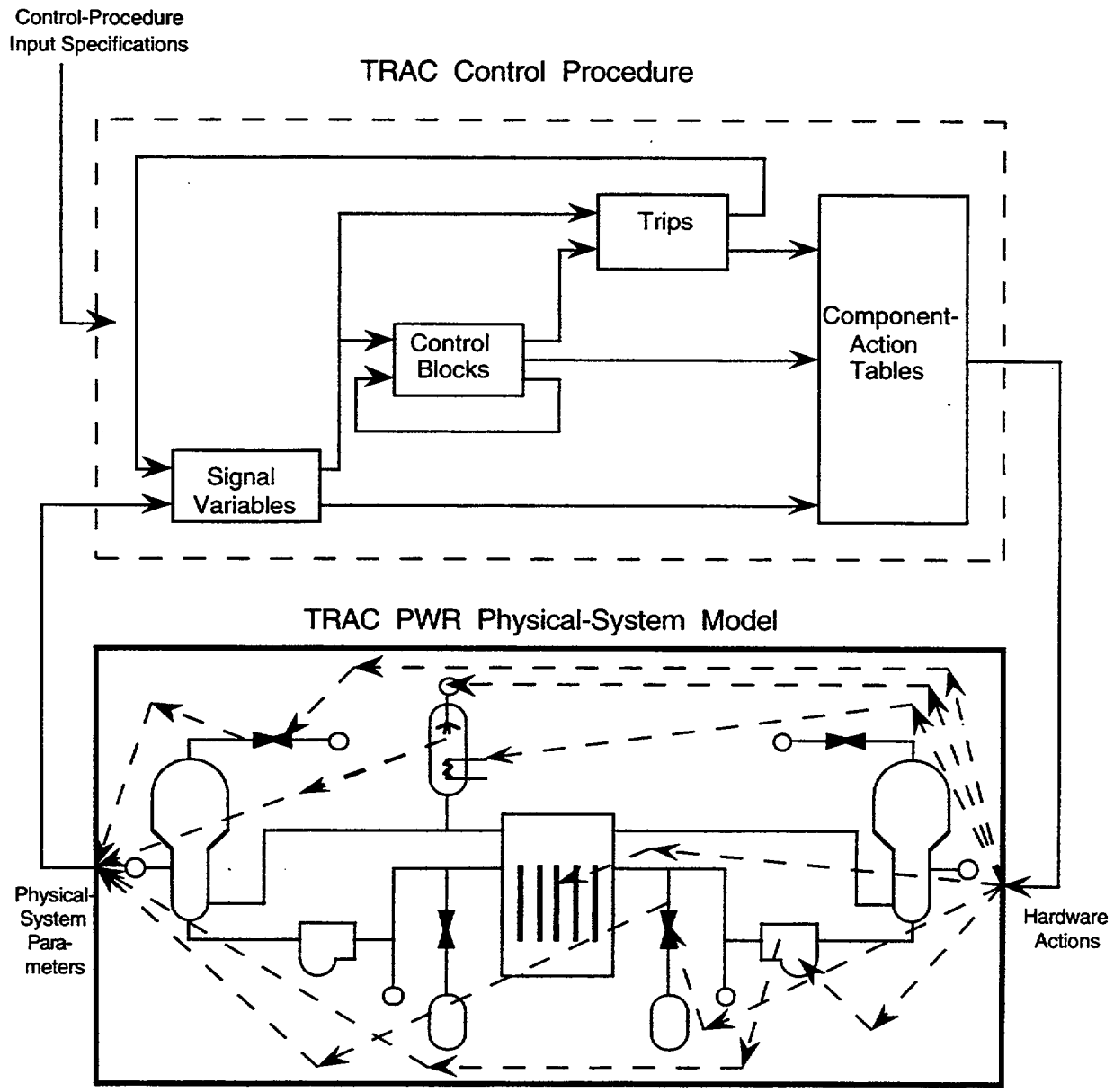

Fig. 3-1. Control-procedure coupling to the TRAC-M model of a PWR.

user-selected controllers that adjust specific component parameters (hardware actions) to achieve desired steady-state values for specific thermal-hydraulic parameters. These proportional plus integral (PI) controllers adjust somewhat uncertain hardware actions to achieve known or desired thermal-hydraulic conditions. A static-check steady-state (SCSS) calculation checks for the presence of unknown or erroneous momentum or energy sources in the modeled system by setting the rotational speed of all pumps and energy sources to zero. All coolant flow in the system should decelerate to zero because of wall-drag surface friction as the SCSS calculation is evaluated. Further information describing the internal-control procedures of each of the steady-state calculations is given in the TRAC-M/F90 Theory Manual.

The initial solution estimate for a steady-state calculation is input specified as part of the component data. It is easiest for the user to define this initial solution estimate at isobaric, isothermal, no-flow, and no-power conditions. Doing so results in the steady-state calculation requiring more calculative effort to convergence to the desired steady-state solution than if a better initial solution estimate were specified. TRAC-M has the option of internally initializing better-estimate steady-state phasic temperature and velocity distributions with the hydraulic-path steady-state initialization procedure. This option is based on input specifying the steady-state temperature, coolant flow, and power source/sink conditions that the user estimates for each hydraulic-path 1D flow channel. It is significantly easier to specify this thermal-hydraulic information for a dozen 1D flow channels than for a thousand mesh cells and interfaces in the system model. The calculative effort of the GSS or CSS calculation when applying this option generally is reduced by an approximate factor of two.

4.0. COMPONENT MODELS

This section describes the TRAC-M component models. A physical description of each component is presented along with a typical noding diagram showing the conventions that are used to model the component. Mathematical models including finite-difference approximations are given in the TRAC-M/F90 Theory Manual. The TRAC-M/F90 Programmer's Manual describes the code flow and data structures for the components, and the intercomponent communication logic. User options, restrictions on the use of the component, and input/output information also are presented here. Detailed input-data format specifications for each component are given in Section 6.0. As described in Section 6.0., all TRAC-M components can be initialized from either TRAC-M's text input file or from a binary file (dump file) that was written by a previous run.

4.1. PIPE Component

The PIPE component models coolant flow in a 1D tube, channel, duct, or pipe. A PIPE component can be used with only BREAK- and/or FILL-component boundary conditions to model 1D flow in a pipe, or it can be used as a connecting pipe between other components to model a reactor system or experimental facility. The capability is provided to model coolant flow-area changes, wall heat sources, and heat transfer between the wall inner and outer surfaces. A large selection of structure materials is available within the code to model the wall material in the wall's conduction heat-transfer calculation. The user can input specify other material properties as well.

Figure 4-1 shows a typical noding diagram for a PIPE component containing a venturi tube and an abrupt flow-area change. The numbers within the PIPE indicate cell numbers, and those above the PIPE indicate cell-interface numbers. The geometry is specified by providing a volume and length for each cell, and a flow area and hydraulic diameter at each cell interface. The junction-interface variables, JUN1 and JUN2, provide reference numbers for connecting the PIPE to other component junctions. The numerical methods used to model coolant and wall thermal hydraulics in the PIPE are described in the TRAC-M/F90 Theory Manual.

Input options are available to model a 2D volumetric heat source in the wall, wall 1D radial conduction heat transfer, wall-surface convection heat transfer based on flow-regime dependent heat-transfer coefficients on the inner surface and input-specified constant heat-transfer coefficients on the outer surface, and wall-surface coolant-flow friction factors. The wall heat-transfer calculation is evaluated when the input number of heat-transfer nodes, NODES, is greater than zero. A critical heat flux (CHF) calculation can be evaluated by setting the input parameter ICHF to 1. Wall friction and irreversible form losses caused by abrupt or gradual coolant flow-area change and coolant flow turning are evaluated by specifying appropriate option values for the input arrays, NFF and FRIC, at each cell interface. These arrays are described in the PIPE input-data specifications of Section 6.3.7.3.

Heat can be deposited directly in the coolant by setting the input parameter IPOW to 1. A power-to-the-fluid table defines the total power that is uniformly distributed in the coolant per unit length for all of the mesh cells of the PIPE component.

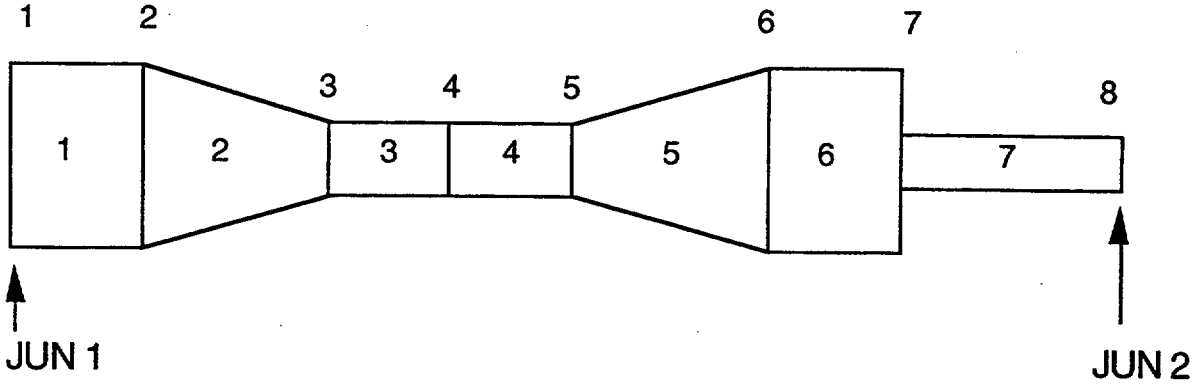

Fig. 4-1. PIPE-component noding diagram.

A PIPE component can be used to model an accumulator by setting the input parameter IACC to 1 or 2 (Section 6.3.7.3.). This evaluates a gas/liquid interface sharpener; outputs the liquid level, flow, and volume discharged from the component; and prevents gas outflow when IACC is 2.

The printed output for a PIPE component includes the component number, junction numbers, outer-iteration count, pressures, gas coolant-volume fractions, saturation temperatures, liquid and gas temperatures, liquid and gas densities, liquid and gas velocities, and liquid and gas wall-friction factors. If wall heat transfer is evaluated (NODES > 0), information is output on the heat-transfer regime, liquid and gas wall-surface HTCs, liquid/gas interfacial HTC, heat-transfer rate from the wall, wall temperature for CHF, and wall-temperature radial profiles.

4.2. BREAK and FILL Components

The BREAK and FILL components are used to impose boundary conditions at any 1D hydraulic component junction. Consequently, these components differ from the other hydraulic components in that they do not model any physical-system component, per se, and they do not perform any hydrodynamic or heat-transfer calculations; however, they are treated like any other component with respect to ID, input, and output.

The BREAK component imposes a pressure boundary condition one cell away from its adjacent component, as shown in Fig. 4-2. The pressure boundary condition, as well as the fluid properties associated with the BREAK cell for inflow donor-cell convection, may be specified as constants, defined individually by signal variables or control blocks, or defined as tabular functions of a signal variable or control block. They can also be constant until a controlling trip is set ON and then evaluated based on the tabular-function BREAK tables while the controlling trip remains ON. This component commonly is used to model the containment system in LOCA calculations or the coolant pressure at an outflow boundary of the modeled system.

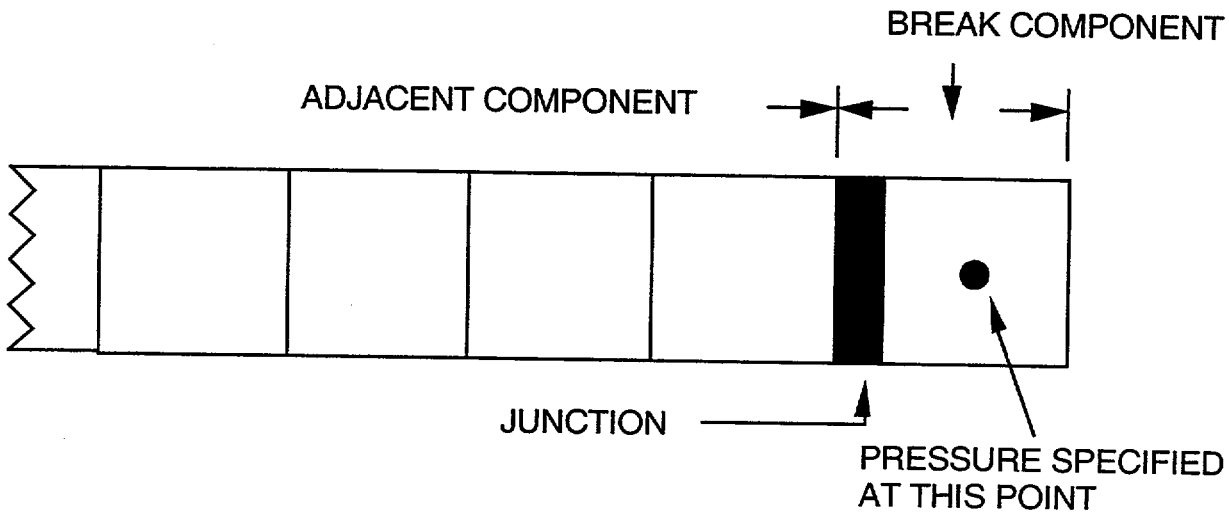

Fig. 4-2. BREAK-component noding diagram.

Inflow momentum flux from a BREAK cell is not modeled internally by TRAC-M because its contribution to the momentum-convection term of the junction-interface motion equation can be numerically unstable. The inflow momentum flux must be modeled by the user through input by defining a dynamic-pressure rather than static-pressure boundary condition.

$$P_{dynamic} = P_{static} + \rho \cdot V_{inflow}^2/2 \tag{4-1}$$

The user also must input a very large BREAK-cell volume or very small BREAK-cell length (for example, VOLIN = 10^{10} or DXIN = 10^{-10}) to model a very large inflow area (VOLIN/DXIN).

A FILL component imposes a coolant velocity or mass-flow boundary condition at the junction with its adjacent component, as shown in Fig. 4-3. For example, the ECC injection or secondary-side feedwater may be modeled with a FILL component.

The velocity or mass-flow boundary condition as well as its fluid properties are specified in one of three ways according to the FILL-type IFTY option selected. For the first type, the homogeneous fluid velocity and fluid properties are specified; for the second type, the homogeneous fluid mass flow and fluid properties are specified; and for the third type, nonhomogeneous fluid velocities and fluid properties are specified. For each type, the relevant parameters may be constant, interpolated from input FILL-component action tables, constant until a controlling trip is set ON to require their evaluation from their action tables, or defined by signal-variable or control-block signals. The independent variable of the FILL table's tabular data is a signal-variable modeled-system parameter or a control-block output signal. When the FILL's coolant velocity or mass flow varies rapidly, using this value may lead to a hydrodynamic instability in the numerical solution. This can be avoided by using a TWTOLD-weighted average of the parameter's previous value and the current specified value or limiting the parameter's time rate of change by RFMX (Card Number 4 input in Section 6.3.7.1.).

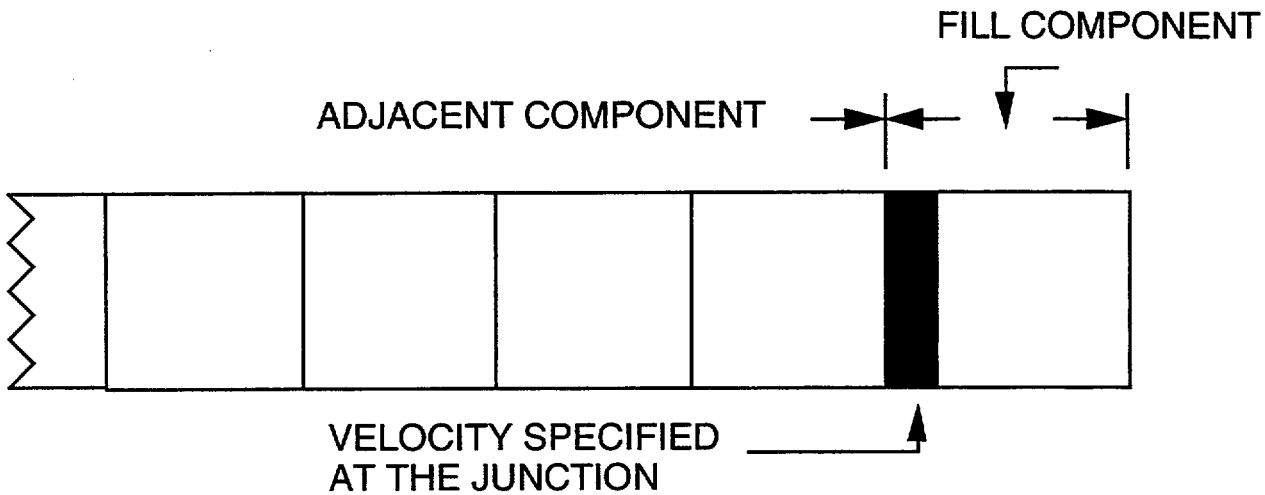

Fig. 4-3. FILL-component noding diagram.

The input parameters needed to define BREAK and FILL components are described in Sections 6.3.7.1. and 6.3.7.2. The BREAK- and FILL-component specified fluid pressure, gas volume fraction, fluid temperatures, noncondensable-gas partial pressure, and solute concentration in liquid define the properties of the fluid convected into the adjacent component if an inflow condition occurs. Averaging the BREAK component's properties with those of its adjacent cell for their junction momentum cell can be eliminated by defining a very small BREAK-cell DXIN length (weighting factor). By convention, inflow to the adjacent component corresponds to a positive velocity at the FILL component's JUN1 junction and to a negative velocity at the BREAK component's JUN1 junction. A FILL or BREAK component may not be connected directly to a VESSEL component source-connection junction or a PLENUM component junction.

4.3. HTSTR Component

The HTSTR component evaluates the dynamics of conduction, convection, and gap-gas radiation heat transfer in a fuel-rod or structure hardware element. The hydrodynamics modeled by all other components are not evaluated by the HTSTR component. As a carryover from early versions of TRAC-P, the PIPE, PRIZER, PUMP, SEPD, TEE, and VALVE hydraulic components also evaluate transient conduction and convection heat transfer across their cylindrical-geometry 1D flow-channel wall (see Sections 2.6.1., 2.6.2., and 6.3.7.7. for the current status of the SEPD component). For user convenience, this heat-transfer capability has remained a part of the modeling capability provided by these hydraulic components, even though it can be done with more modeling flexibility by an HTSTR component. An HTSTR component must be used to model both powered and unpowered elements in a VESSEL component. In all future modeling, the TRAC-M user is encouraged to do heat-transfer modeling with HTSTR components coupled to hydraulic components because of the more flexible and extended features that an HTSTR component provides. If the NAMELIST-input NEWRFD option core-reflood model is used, the user must use an HTSTR component coupled to a VESSEL component to model the vessel's downcomer, lower-plenum, reactor-core, and upper-plenum regions.

The heat-transfer modeling in an HTSTR-component hardware element is in either ROD cylindrical (r,z) or SLAB Cartesian (x,z) 2D geometry. The TRAC-P user selects the hardware-element geometry by specifying ROD or SLAB through input as the component type for the HTSTR component. Heat transfer is evaluated implicitly in the r or x direction and explicitly (NAMELIST-input NRSLV = 0 option default) or implicitly (NRSLV = 1 input) in the axial z direction when the HTSTR-component axial-conduction input parameter IAXCND = 1. If IAXCND = 0 is input, TRAC does not evaluate axial-conduction heat transfer.

The HTSTR-component hardware element may have an inner surface, outer surface, or both inner and outer surfaces where convection heat transfer is evaluated. Figure 4-4 shows the 2D node-row and node-column conduction coupling and the convective coupling to hydraulic cells at its inner and outer surfaces (perpendicular to the r or x direction). The number of r- or x-direction and z-direction nodes is input defined by NODES and NCRZ+1, respectively. If NODES = 1, a one-node lumped-parameter heat-transfer solution is evaluated in the x or r direction without axial heat transfer. Node rows defined through input must be located on hydraulic-cell interfaces in the z direction. The inner and outer surfaces are defined individually by one of three different heat-transfer boundary conditions that are input specified by IDBCI and IDBCO:

0 defines an adiabatic heat-transfer surface (having no r- or x-direction thermal-energy flux; dT/dr or dT/dx is zero where T is the temperature at the inner or outer surface);

1 defines a heat-transfer surface with input-specified constant-value HTCs and temperatures for the gas- and liquid-coolant phases that are heat-transfer coupled to the inner or outer surface; and

2 defines a heat-transfer surface coupled to hydraulic-component cells that are input-specified; heat-transfer coefficients and temperatures are evaluated by the TRAC-M hydrodynamic solution for the gas- and liquid-coolant phases that are heat-transfer coupled to the inner or outer surface.

The IDBCI = 2 and IDBCO = 2 boundary condition provides the TRAC-M user with the capability to couple any two hydraulic cells within the modeled system with a conduction and surface-convection heat-transfer path. Also, any number of hydraulic cells can be coupled to a given hydraulic cell.

A specific example of the coupling of an HTSTR component that models reactor fuel rods to the core region of a 3D VESSEL component is given in Appendix E (see VESSEL component 1 and ROD 900). The noding of that particular VESSEL is shown in Section 5.0. (Fig. 5-6); its HTSTR components are also illustrated in Fig. 5-7, where the locations of structural elements, fuel rods, and fuel rod noding are shown.

Arrays NHCOMI(k), NHCELI(k), NHCOMO(k), and NHCELO(k) for k=1,2,..,NCRZ+2 define the hydraulic-component {NHCOMs(k)} ID number and cell {NHCELs(k)} number that are convection heat-transfer coupled to the HTSTR-component inner (s=I)

or outer (s=O) surface at axial node-row k when IDBCs = 2. Hydraulic cell |NHCELs(k)| is between node rows k and k+1 if NHCELs(k) < 0 and between node rows k–1 and k if NHCELs(k) > 0. Its numerical sign allows the direction of axial node-row numbering to be the same (+) or opposite (–) that of hydraulic-cell numbering. When the number of ROD or SLAB elements (specified by HTSTR input variable NCRX, as described in Section 6.3.7.2.) is > 1, each element can be coupled to the same or to a different hydraulic component by input-specifying M1D = 0 (default) or M1D = 1, respectively. When M1D = 1, the four arrays are input for each of the NCRX elements to define the difference in their hydraulic-component coupling.

An HTSTR component has the capability to dynamically add and remove additional axial fine-mesh node rows during the TRAC-M calculation. Under input-specified trip IRFTR control, TRAC-M adds and removes axial fine-mesh node rows in either of two ways.

1. When trip IRFTR is set ON, TRAC-M adds NFAX(k) input-specified permanent axial fine-mesh node rows to each of the k = 1, NCRZ axial-cell intervals, with equal axial spacing within each interval. These permanent axial fine-mesh node rows remain in place until the trip IRFTR is set OFF.

2. During the time that trip IRFTR is ON, TRAC may either add or remove a temporary axial fine-mesh node row. This occurs when:

   a. the surface temperature change between axial node rows coupled to TRAC hydraulic cells (where IDBCI = 2 or/and IDBCO = 2) exceeds the input-specified DTXHT(m) {to add} or is less than DTXHT(m)/2.1 {to remove}, respectively, where m = 1 for the nucleate- and transition-boiling heat-transfer regimes and m = 2 for all other heat-transfer regimes,

   b. adding the axial node row will not reduce the axial distance between node rows below the input-specified DZNHT minimum value, and

   c. removing the axial node row will not result in the axial-interval spacing on each side of the adjacent node rows having a ratio (new interval with respect to remaining intervals below and above) less than 10.

The total number of axial node rows (input+permanent+temporary) cannot exceed the input-specified NZMAX. When trip IRFTR is set OFF, all temporary as well as permanent axial fine-mesh node rows are removed leaving only the input axial node rows.

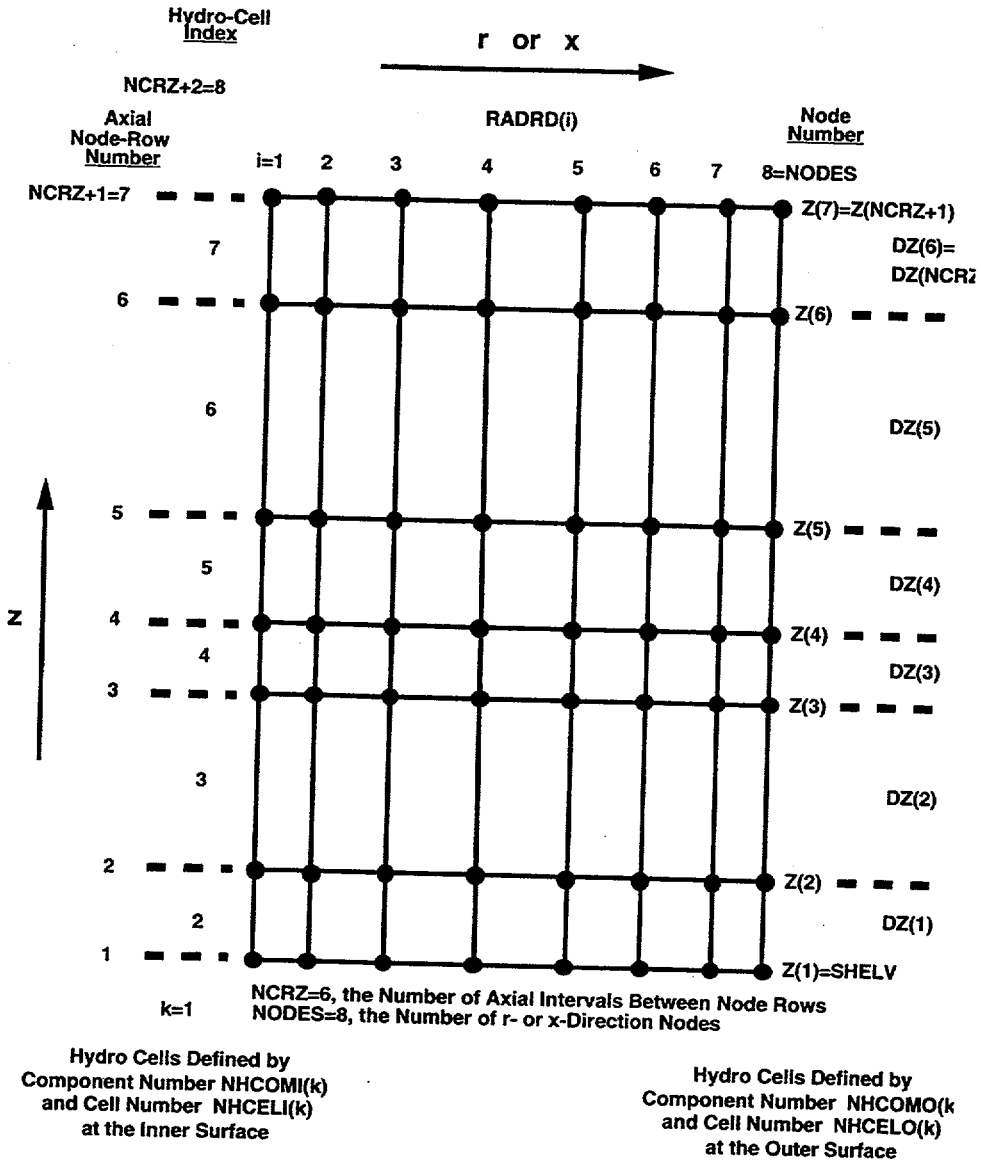

Fig. 4-4. ROD or SLAB geometry HTSTR-component example with hydraulic-cell coupling on both the inner and outer surfaces.

Note: **TRAC-M/F90 and TRAC-M/F77 Reflood Models.** TRAC-M/F90 contains a core-reflood model that was brought over from TRAC-PF1/MOD2; TRAC-M/F77 also contains, in addition to this model, a more recent reflood model (with new closure relations) that was developed for analysis of simultaneous top-down/bottom-up quenching. An additional option for the newer model in TRAC-M/F77 allows for use of the closure relations in TRAC-PF1/MOD1 with multiple-quench fronts. Use of the new model in TRAC-M/F77 is described here in Appendix MMM. See the references in Sections 2.0. and 6.0. for a detailed discussion of the new TRAC-M/F77 reflood model.

Evaluating the core-reflood models with HTSTR component coupling to the axial hydraulic-cell columns in a VESSEL component requires that NAMELIST-input option NEWRFD be used and the axial fine-mesh model be evaluated at the same time with its trip IRFTR set ON (the new top-down/bottom-up core reflood model also uses another set of NAMELIST variables). There is a separate trip stored in input variable IRFTR2 that controls the reflood logic itself. The reader is referred to the TRAC-M/F90 Theory Manual for a description of the TRAC-PF1/MOD2-TRAC-M/F90 core-reflood model interfacial and wall, heat-transfer and drag modeling. See Appendix MM of this document (and the references in Sections 2.0. and 6.0.) for discussion of the new TRAC-M/F77 reflood model. Heat-transfer conduction in the HTSTR component is discussed in the TRAC-M/F90 Theory Manual. Further details describing the axial fine-mesh model also can be found there, along with a discussion on the fuel-cladding gap conductance model and the metal-water reaction model.

An external-surface thermocouple model has been incorporated into the HTSTR component. Figure 4-5 shows a cross-section diagram of an HTSTR ROD element with a thermocouple-wire containing rod welded to its side in the axial direction. The NODES radial node is located in the thermocouple rod, and the NODES-1 radial node is located on the outer surface of the ROD element. The model accounts for the heat-conduction path across the thermocouple-rod weld and the additional heat-convection path of the thermocouple-rod surface to the IDBCO = 2 hydraulic cells to which it is coupled. This model does not account for any perturbation of the flow field by the presence of the thermocouple, nor does it account for collection of liquid at the weld joint. The thermocouple temperature of radial node NODES can be significantly different from the ROD-element outer-surface temperature of radial node NODES-1. It is the thermocouple temperature of node NODES that should be compared with experimentally measured thermocouple temperatures. Further details describing the external-surface thermocouple model in the HTSTR component can be found in the TRAC-M Theory Manual. The thermocouple model currently is incompatible with the implicit axial-conduction heat-transfer NAMELIST NRSLV = 1 option and requires that the explicit axial-conduction heat-transfer NRSLV = 0 option be applied for the HTSTR component.

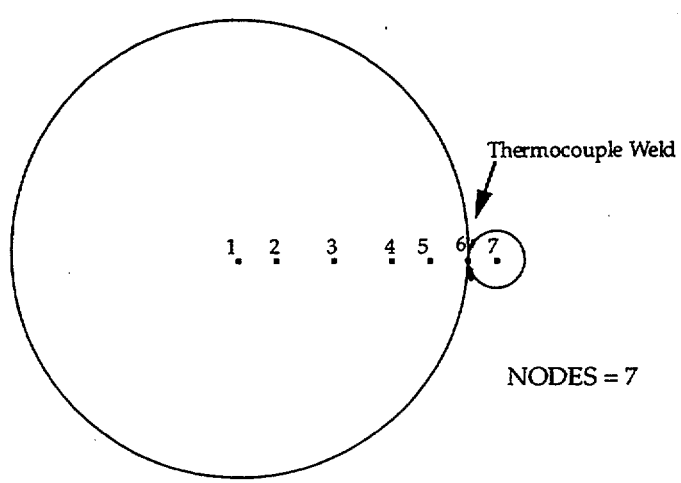

Fig. 4-5. Cross section of an external-surface thermocouple attached to a cylindrical ROD element of a HTSTR component.

Input-specified options are provided to define power generation in the HTSTR component ROD or SLAB element. Essentially there are two basic power generation methods, each with variations: (1) explicit specification by the input, as a constant RPOWRI value, by table lookup, or by a combination of an initial constant power and a trip-initiated table lookup, and (2) evaluation by TRAC-M based on a point-reactor kinetics model. In both methods the total power-generation rate is for all NCRX elements of the HTSTR component. In steady-state runs, RPOWRI specifies a constant power level. Complete input specifications for all HTSTR power options are given in Section 6.3.7.2. of this document. Table 4-1 shows an example of reactor core power modeled by a table lookup (suitable for an LBLOCA). Input variable NOPOWR specifies that this HTSTR/ROD component is powered, and IRPWTY specifies the power option (table lookup). For the steady-state run, the power is held at the value of RPOWRI, and for the transient the values in table RPWTB are used to model reactor scram. Table RPWTB consists of a set of independent/dependent-variable pairs; the independent variable is specified by input-variable IRPWSV to be signal variable 1 (problem time in the deck this example was taken from), and the total number of table pairs is specified by input variable NRPWTB. Note that the initial (at problem time 0.0) power value in table RPWTB is equal to RPOWRI (3.25×10^9 W). If only a constant power were desired, IRPWTY would be entered as 5, RPOWRI would be used, and no table would be input. Details on the point kinetics model are provided in Section 7.7.3. of this document and in of the TRAC-M/F90 Theory Manual. Appendix E of this document gives an example of a reactor core that is modeled with the most complex point kinetics option.

A reactivity feedback model is provided that is based on the core-region power-weighted, volume-averaged fuel temperature, coolant temperature, gas volume fraction, and boron concentration. TRAC-M combines this feedback reactivity with programmed (control-rod insertion) reactivity that is input specified to provide the driving function for the point-reactor kinetics evaluation of fission power generated within the NCRX average-power ROD or SLAB elements of the HTSTR component. When the point kinetics model is not being used, reactivity feedback effects optionally may also be evaluated and sent to the output. Section 7.7.3. of this document and the TRAC-M/F90 Theory Manual provide details on the TRAC-M reactivity feedback model. Complete input specifications for the reactivity feedback model are given in Section 6.3.7.2. of this document. Appendix I of this document provides a thorough discussion of a TRAC-M reactivity feedback input model that was developed to apply the reactivity feedback model to the point-reactor kinetics option that is part of the input deck in Appendix E. Appendix I also discusses the importance of applying reactivity feedback when point kinetics is used (for slow transients such as the steam-generator single-tube rupture modeled in Appendix F), and it discusses obtaining acceptable input data for the TRAC-M reactivity feedback model.

The HTSTR component has a decay-heat model that combines the point-kinetics fission power with the power from decaying fission-product precursors to define the total thermal power generated in the ROD or SLAB elements. Details of this model are given in Section 7.7.3. of this document and in the TRAC-M/F90 Theory Manual. The default option for this model is the 69-group, ANS-79, decay-heat standard with the additional capability, if desired, of evaluating the heavy-element decay of ^{239}U and ^{239}Np. As an

TABLE 4-1
CORE POWER SPECIFIED BY TABLE LOOKUP

```
*******   type          num           id        ctitle
rod                     140          140 $140$ reactor-core fuel rods
*         ncrx         ncrz         ittc         iext          m1d
            4            3            0            0            0
*       nopowr        nridr        modez       liqlev       iaxcnd
            0            1            0            1            0
*        idbci        idbco         hdri         hdro
            0            2    0.0000e+00   1.3000e-02
*        nrods        nodes        irftr        nzmax       irftr2
            4            8           12          100            0
*     dtxht(1)     dtxht(2)        dznht        hgapo         shelv
   4.0000e+00   5.0000e+01   5.0000e-03   6.0000e+03   0.0000e+00
*       irpwty         ndgx         ndhx         nrts        nhist
            6            0          -11           10            0
*       irpwtr       irpwsv       nrpwtb       nrpwsv       nrpwrf
            0            1           20            0            0
.
.
.
*        react        tneut       rpwoff       rrpwmx       rpwscl
   0.0000e+00   0.0000e+00   0.0000e+00   1.0000e+20   1.0000e+00
*       rpowri        zpwin       zpwoff       rzpwmx
   3.2500e+09   0.0000e+00   0.0000e+00   0.0000e+00
.
.
.
* zpwtb *    0.0000e+00   6.4285e-01   1.2321e+00   1.1786e+00   5.3571e-01
* zpwtb * e
* rpwtb *    0.0000e+00   3.2500e+09   1.0000e-01   2.2700e+08   1.0000e+00
* rpwtb *    1.9500e+08   2.0000e+00   1.8800e+08   5.0000e+00   1.7500e+08
* rpwtb *    1.0000e+01   1.6200e+08   1.5000e+01   1.5200e+08   2.0000e+01
* rpwtb *    1.4600e+08   5.0000e+01   1.2300e+08   7.5000e+01   1.1300e+08
* rpwtb *    1.0000e+02   1.0700e+08   1.2500e+02   1.0400e+08   1.5000e+02
* rpwtb *    1.0000e+08   2.0000e+02   9.4000e+07   2.5000e+02   8.8000e+07
* rpwtb *    3.0000e+02   8.4000e+07   3.5000e+02   8.0000e+07   4.0000e+02
* rpwtb *    7.7000e+07   5.0000e+02   7.2500e+07   9.0000e+02   5.5000e+07
* rpwtb * e
.
.
```

alternative, the user may select the 11-group ANS-72 decay-heat standard that was the default in earlier versions of TRAC-PF1. Users may define their own model by inputting the decay-heat parameters for an input-specified number (input variable NDHX) of groups. The same can be done for the delayed-neutron parameters and its number of groups (input variable NDGX) for the point-reactor kinetics model. The use of variables NDGX and NDHX is explained in Section 6.3.7.2. The initial decay-heat precursor concentrations and the initial delayed-neutron concentrations can be input specified or evaluated by TRAC based on steady-state or power-history specified conditions. Gamma heating in the ROD or SLAB element's fuel and clad material is defined through an r- or x-dependent power distribution (which is discussed in the next paragraph). Gamma heating of the coolant has not been programmed for direct evaluation by TRAC-M. The user can model such gamma heating by defining a signal variable and control block to specify some fraction of the total power from the HTSTR component as being deposited directly in the coolant of specified hydraulic cells using the hydraulic component's power-to-fluid component action.

Once the total thermal power, P_{tot}, is determined (either by explicit input specification or by the point-reactor kinetics and decay-heat models in TRAC-M), it is applied to a 3D power distribution that is also input specified. In the following discussion of the 3D power shape we indicate array elements by the indices i, j, and k and also refer to two arrays that are used internally by the code. The TRAC-M user does not need to be an expert on the the array indexing or the internal arrays, but using this nomenclature here makes the explanation of TRAC-M's power shape features easier to follow. Our discussion in this section starts with an overview and is followed by more details (where figures that illustrate axial power shapes that might model control rod insertion are discussed). The complete input specifications for the core power shape are given in Section 6.3.7.2. Throughout the discussion here the index i indicates a radial (or Cartesian x) direction in an individual ROD or SLAB component, j indicates the horizontal-plane location (corresponding to an axial stack of hydrodynamic cells in the reactor core), and k indicates an axial location. The array references that contain complex offsets are given here simply to show that we are describing both axial and radial data. The appropriate format in which to input such combined data is described in Section 6.0. As described below, and in Section 6.0. TRAC-M allows the user to input power-shape information at locations that are different from the basic radial (or Cartesian x) and axial HTSTR nodes.

The 3D power distribution can be specified by one of two basic methods:

(1) <u>input variable IPWRAD = 0</u>: Three separate 1D power distributions are superimposed by multiplication of a ROD-radial or SLAB-Cartesian 1D power shape RDPWR(i), a horizontal-plane 1D power shape CPOWR(j), and an axial 1D power shape ZPW(k), [i.e., RDPWR(i)*CPOWR(j)*ZPW(k)]. Arrays RDPWR and CPOWR are directly input; array ZPW is derived from input array ZPWTB as described below. Also, as described below, array ZPW may be further manipulated internal to the code to allow the user to specify the power shape at locations other than the basic HTSTR axial node locations.

(2) <u>input variable IPWRAD = 1</u>: A ROD-radial or SLAB-Cartesian and axial 2D power shape ZPW(k+{i-1}*NZPWZ) and a horizontal-plane 1D power shape CPOWR(j), [i.e.,

ZPW(k+{i-1}*NZPWZ)*CPOWR(j)] are superimposed by multiplication. In this case, array CPOWR is directly input, and array ZPW is derived from input array ZPWTB. As described below, array ZPW may be further manipulated internal to the code to allow the user to specify the power shape at locations other than the basic HTSTR axial and radial node locations. Complete details on the IPWRAD=1 option are given in Ref. 4-1.

The ZPW(k) or ZPW(k+{i-1}*NZPWZ) power shape is defined by linearly interpolating it from an input-specified axial power-shape table, ZPWTB, having one or more power shapes that are a function of an input-specified signal-variable or control-block parameter. ZPWTB can be input defined with unnormalized power-density values at each location in the power shape for one or more power shapes when IPWDEP=0 or defined with signal-variable or control-block identification numbers that define the power-density value at each location in the power shape for one power shape when |IPWDEP|=1. The 1D axial or 2D radial or Cartesian and axial locations in ZPWTB may or may not be defined at the node locations of the heat-structure ROD or SLAB. This defining form is provided as a convenience to the user whose power-shape data may be defined at different locations from that of the ROD or SLAB nodes. Internal to TRAC-M, the ZPW(k) or ZPW(k+{i-1}*NZPWZ) power shape at input-specified locations is converted to a power shape at the ROD or SLAB node locations, which is stored in internal array ZPWFB(k) (indexed as ZPWFB(k+{i-1}*{NCRZ+1}) when the IPWRAD = 1 2D power shape option is used).

The horizontal-plane power distribution CPOWR(j) is applied to NCRX > 1 ROD or SLAB average-power elements, where each element is coupled to a different axial-direction hydraulic-cell column in a single VESSEL component when M1D = 0 or to multiple 1D hydraulic components when M1D = 1. For coupling to a single 1D hydraulic component when M1D = 0, NCRX = 1 and CPOWR(j) for j = 1 do not define a horizontal-plane power distribution because they only have one value. Horizontal originally referred to the geometry plane in a VESSEL component that is perpendicular to the axial direction. The user needs to be aware that the axial direction of the ROD or SLAB element and the hydraulic cells that it may be coupled to on either of its surfaces may not necessarily be the vertical (gravity-vector) direction. VESSEL components (through NAMELIST-input option NVGRAV = 1) as well as other 1D hydraulic components may be oriented in any direction with respect to the gravity-vector direction.

The input-specified ZPWTB axial-power-shape table (or combined axial/radial when IPWRAD=1) has four aspects of its definition that need further clarification:

1. the input form for each of the table's |NZPWTB| data pairs,
2. the capability to define the z-direction dependence of the axial power shape with NZPWZ axial-shape values that may differ from the NCRZ+1 node-row values defined in early versions of TRAC-P (this capability generalizes to the r- or x- direction when the 2D power shape option (IPWRAD=1) is used),
3. the capability for TRAC-M to define a more detailed z-direction dependence from the axial-power-shape table as permanent and temporary fine-mesh node rows are added by TRAC-M to the user-input NCRZ+1 axial node rows shown in Fig. 4-4, and

4. the NZPWI input option defining how the z-direction dependence of the axial-power shape is defined (this capability generalizes to the r- or x-direction when the 2D power shape option (IPWRAD=1) is used).

These four items are discussed in the following three paragraphs, where for simplicity we consider only the axial direction (IPWRAD=0). Essentially, we are describing the user's attempt to estimate by direct input a 1D neutronics solution (which TRAC-M does not calculate) to model control rod movement.

As in early versions of TRAC-P, the axial-power-shape table defines one or more axial-power shapes as a function of a user-specified control parameter. An example of such a table is shown in Fig. 4-6, where three different axial-power shapes are defined for three different core-region volume-averaged values of the gas volume fraction. It is shown in these shape definitions that core voiding progresses axially downward and locally reduces the neutronic power because of reduced neutron moderation. When the core becomes fully voided (a gas volume fraction of unity), the axial-power shape is flatter because of enhanced neutron leakage out of the core region. This axial-power-shape table example would be input specified having NZPWTB = 3 data pairs, with each data pair in the table having (1+NZPWZ) values; that is, a gas volume-fraction value and NZPWZ axial-power-shape values (NZPWZ = 7 in the Fig. 4-6 example) associated with the gas volume-fraction value.

To determine the axial-power shape with NCRAZ values needed by TRAC-M (internal array ZPWFB), the value of the core-region volume-averaged gas volume fraction (defined by a input-specified signal variable evaluated by TRAC-M) is used by TRAC-M to interpolate (between two of the axial-power shapes in the ZPWTB table) a ZPW(k) axial-power shape linearly with NZPWZ values. Then the ZPW(k) axial-power shape is numerically integrated over each of the NCRAZ axial intervals of the heat-transfer node-row cells to determine the NCRAZ node-row average power densities that define the desired ZPWFB(k) axial-power shape. As fine-mesh node rows are added by TRAC-M to its axial heat-transfer mesh, NCRAZ increases from its initial user-defined value of NCRZ + 1. The shape of ZPWFB(k) may change along with its NCRAZ number of power densities, and in the limit as NCRAZ gets large, approach the ZPW(k) axial-power shape determined from the user-specified ZPWTB axial-power-shape table. Inputting a more detailed axial-power shape with NZPWZ values allows the axial-shape dependence to be represented in more detail by ZPWFB(k) as TRAC-M adds fine-mesh node rows to the heat-transfer calculation mesh. In TRAC-PF1/MOD1, the user defined the ZPWTB axial-power-shape table with NCRZ + 1 shape values. It was that histogram shape (with step changes midway between node rows) that was numerically integrated to define average power-densities for the fine-mesh node rows added. A more detailed specification of the axial-power shape was not definable with the fine-mesh option for fuel rods in the TRAC-PF1/MOD1 CORE and VESSEL components. Thus, in items 2 and 3 above, the HTSTR component provides the capability for input specifying a more detailed z dependence for the axial-power shape and then applying that more detailed shape to the heat-transfer solution as TRAC-M adds fine-mesh node rows.

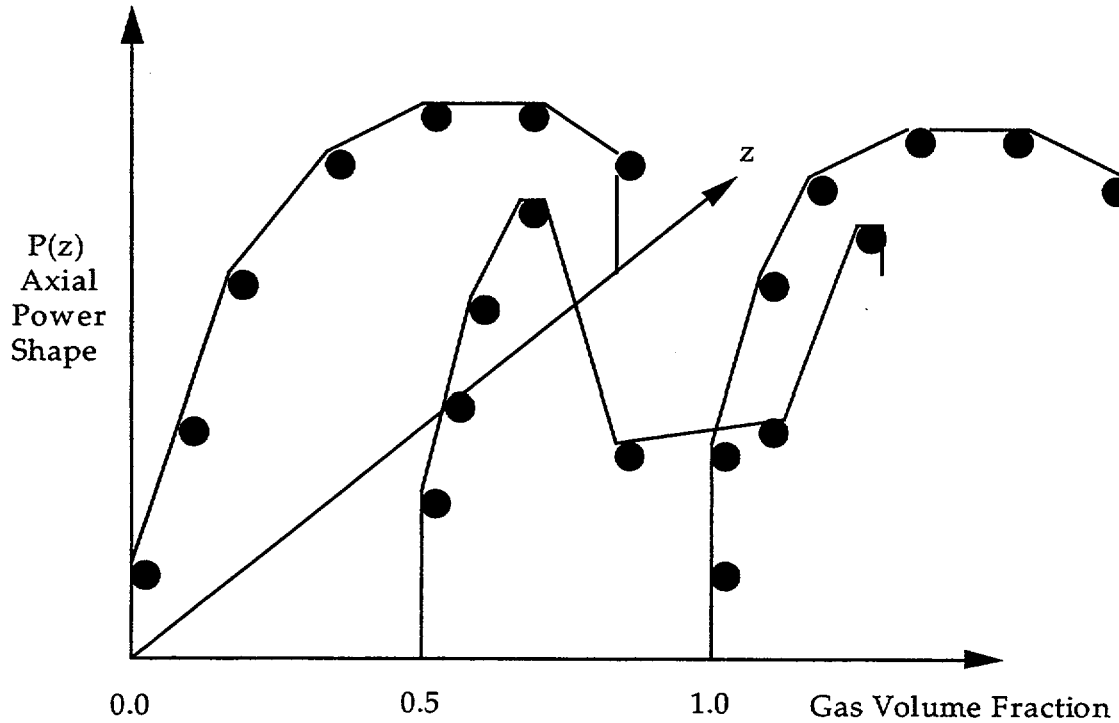

Fig. 4-6. Axial-power-shape table ZPWTB with NZPWTB = 3 P(z) axial-power shapes having gas volume fraction dependence.

The fourth aspect to be described in applying the axial-power-shape table ZPWTB is the NZPWI input option defining the z dependence of the NZPWZ power density values for each of its shapes. NZPWI has three option values: –1 defines a histogram power shape with step changes at axial locations ZPWZT(k); 0 defines a histogram power shape with step changes midway between axial locations ZPWZT(k); and 1 defines a power shape with linear variation between the power-density values at axial locations ZPWZT(k) for k=1,2,...,NZPWZ. Figure 4-7 shows an example of axial-power shapes defined for each of the three NZPWI options. In defining the ZPWZT(k) axial locations of the power densities in the axial-power shape, the user should define ZPWZT(1) = Z(1) and ZPWZT(NZPWZ) = Z(NCRZ+1), where Z(k) defines the axial locations of the NCRZ+1 node rows shown in Fig. 4-4.

The power density in an HTSTR-component ROD or SLAB element node i, in horizontal-plane cell j and in axial node-row k is defined in TRAC-M by

$$P(i,j,k) = S \cdot P_{tot} \cdot RDPWR(i) \cdot CPOWR(j) \cdot POWZ(k) . \qquad (4\text{-}2)$$

The scale factor, S, is defined to normalize the 3D power distribution to a core-region volume-averaged value of unity [for i = 1,NODES, j = 1,NCRX, and k = 1,NCRZ+1]; i.e.,

$$S = 1 \,/\, [\Sigma_{i,j,k}]\, AREA(i) \cdot RDPWR(i) \cdot NRDX(j) \cdot CPOWR(j) \cdot DZ(k) \cdot POWZ(k)\}] , \qquad (4\text{-}3)$$

where AREA(i) is the horizontal-plane power-region cross-sectional area of the ROD or SLAB element node i, NRDX(j) is the number of average-power ROD or SLAB elements

in horizontal-plane cell j, and DZ(k) is the axial-direction length of the node-row heat-transfer cell k.

In addition to the NCRX different average-power ROD or SLAB elements in the horizontal plane, the TRAC-M user also can define NRODS –NCRX additional ROD or SLAB elements that do not couple their thermal solution back to the hydraulic cells from which their surface boundary condition is defined. For these additional ROD or SLAB elements, the TRAC-M user input specifies a power-peaking factor, RPKF(j), that also is applied in Eq. (4-2) to define the power density in each of the NRODS –NCRX additional ROD or SLAB elements. Their power density can be greater or less than the average power by defining RPKF(j) $\geq$ 1.0.

Defining an HTSTR-component ROD or SLAB element to be powered (NOPOWR = 0) more than doubles the required input-data specification in Section 6.3.7.2. of this User's Guide. As with the other hydraulic components, the input data are organized with the scalar parameters first, followed by the array parameters. Within each of these sections, the parameters required for both unpowered and powered HTSTR components come first, followed by the parameters required only for powered HTSTR components. For unpowered HTSTR components, the user inputs the scalar parameters on Card Numbers 1 to 10 (and skips over Card Numbers 11 to 23 defining scalar parameters for powered HTSTR components) and inputs the array parameters on Card Sets 24 to 38 (and ends there without inputting Card Sets 39 to 71 defining array parameters for powered HTSTR components).

Note: **Thermal Radiation Heat Transfer Model.** Currently, in TRAC-M/F90 (Version 3.0), the thermal radiation heat-transfer model is not available. The model is available in TRAC-M/F77. The thermal radiation and reflood models (either MOD2 or top-down/bottom-up) cannot be used in the same input specification, although radiation heat transfer is allowed when TRAC-PF1/MOD1 closure is used for reflood (i.e., NAMELIST variable NEWRFD = 0 or 2, as described in Ref. 2-9).

A capability to model thermal-radiation heat transfer was added to TRAC-PF1/MOD2. See Ref. 4-2 for a description of the theoretical basis and implementation of the radiation model. The model is based on the radiation-enclosure method that evaluates radiative exchanges between discrete surfaces of HTSTR components that are convection heat-transfer coupled to particular hydraulic-component cells. An option is available to include participation of the intervening two-phase fluid coolant. If the fluid participates in the radiative exchange, the model assigns radiation-related properties to each of the fluid phases according to a radiation flow-regime map based on the gas volume fraction. The net radiative heat flux at each HTSTR surface and the energy absorbed by the fluid are coupled to the overall energy conservation equations that determine the structure and fluid temperatures.

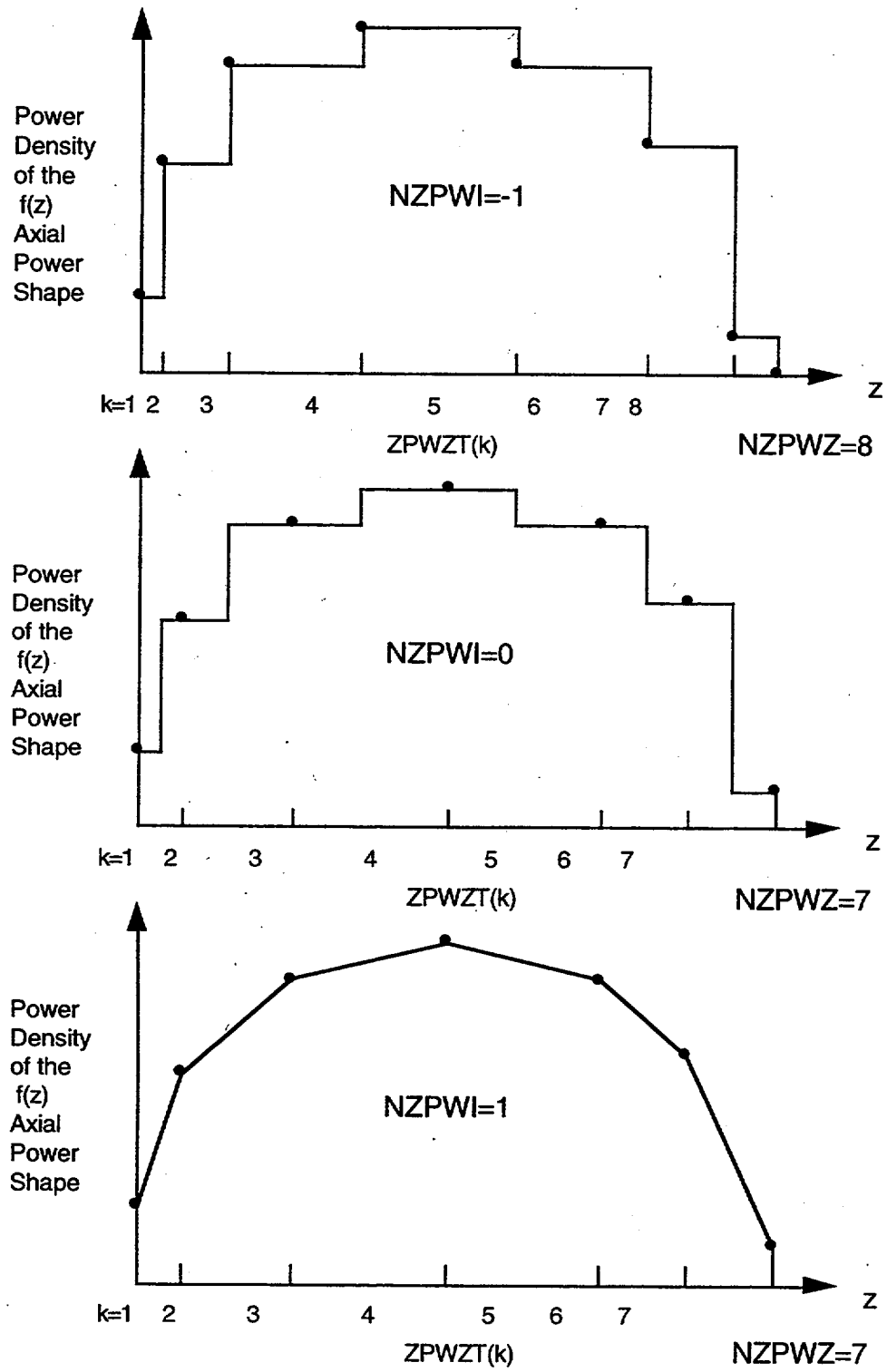

Fig. 4-7. NZPWI-option examples of defining the axial-power-shape z dependence.

To apply the radiation heat-transfer model, the user specifies NAMELIST variable NENCL ≥ 1. This integer defines the number of radiation enclosures in the model. For each enclosure, the number of surfaces to be involved in radiative exchanges must be defined. Enclosure data (with one data card for each enclosure), defining the total number of faces in each enclosure and whether the intervening fluid participates, are input at the end of the Control-Procedure Data.

Each surface of a radiation enclosure corresponds to a node on either the inner or outer surface of an HTSTR component. The radiation model requires that each HTSTR component have a single ROD or SLAB element, i.e., the model requires that NCRX = 1 (Word 1 on Card Number 2) and NRODS = 1 (Word 1 on Card Number 11). Radiative properties such as surface emissivities, geometric view factors, and average path lengths are specified as part of the input data for each of the HTSTR components involved.

4.4. PLENUM Component

The PLENUM component, which models the thermal hydraulics of a volume connected to an arbitrary number of 1D hydraulic components, is a single-cell component that the user can either set up as a momentum sink (where all inflow momentum is converted to a coolant pressure rise) and/or for convecting momentum across the cell from one side (having JUNS1 junctions) to the other side (having JUNS2 junctions). The effect of an elevation change between the PLENUM cell and its adjacent-component junction cells is evaluated. There are single values for the coolant pressure, noncondensable-gas pressure, gas volume fraction, liquid temperature, vapor temperature, and solute concentration in the PLENUM cell. At each of its NPLJN junctions, TRAC-M evaluates the standard 1D, two-fluid motion equations with the PLENUM-cell momentum flux set to zero (when JUNS1 = 0 and JUNS2 = 0) or convected across the cell in one direction (when 0 < JUNS1, 0 < JUNS2, and 2 ≤ JUNS1 + JUNS2 ≤ NPLJN). There is no requirement that the liquid and gas velocities be equal at a junction. The existence of stratified flow results from the constitutive correlations if the momentum-cell mean coolant velocity falls below a threshold velocity and the elevation change falls below a threshold slope at each PLENUM-cell junction.

No interface data are input for the PLENUM component except for the junction-number connections to its cell. The PLENUM component requires one or more junctions. All pertinent junction-parameter information is obtained by the 1D hydraulic components that are connected to the PLENUM cell. The user specifies as many PLENUM-side cell lengths as junctions such that each junction has its own associated PLENUM-cell length. The PLENUM component does not require identical cell lengths for its single cell. TRAC-M uses the PLENUM-cell length for each junction in its motion equation solution for the junction. In particular, the GRAV elevation parameter at a given junction (input by the adjacent 1D hydraulic component) is defined in terms of the cell lengths from the adjacent-component cell and the PLENUM-cell junction.

Currently, TRAC-M does not allow HTSTR components to be coupled by convection heat transfer to a PLENUM cell. A PLENUM-component junction cannot be connected to a BREAK, FILL, PLENUM, or VESSEL component junction. Signal variables cannot

define a PLENUM-cell parameter. If needed, the signal variable should be defined in the adjacent 1D hydraulic-component cell.

4.5. PRIZER Component

A PWR pressurizer is a large fluid-volume reservoir that maintains the coolant pressure within the reactor primary-coolant system and compensates for changes in the coolant volume caused by system transients. During normal operation, this reservoir contains the highest-energy fluid in the primary-coolant system. It is usually maintained 50–60% full of saturated liquid that is pressurized by the saturated steam (vapor) above it. The pressurizer controls the primary-coolant system pressure by hydraulic coupling through a long surge line connected to one of the hot legs.

The PRIZER component simulates the pressurizer reservoir. This component normally models only the pressurizer reservoir with the connecting surge line modeled by a PIPE or TEE component. A typical noding diagram in Fig. 4-8 shows that the PRIZER component may be connected at both its junctions to other 1D hydraulic components. Cell 1 is assumed to be at the top of the reservoir, which may be closed by connecting its junction to a zero velocity or mass-flow boundary-condition FILL component. Cell NCELLS is assumed to be at the bottom of the PRIZER component, which is connected to the surge line. For TRAC-M steady-state calculations, the PRIZER component is replaced automatically with the equivalent of a BREAK component at each of its junctions. The input-specified thermal-hydraulic conditions in the PRIZER component during steady-state calculations remain unchanged except for the component's wall temperature, which is calculated by conduction heat transfer to obtain a steady-state, wall-temperature profile.

The PRIZER component includes heater/sprayer logic to serve as a system pressure controller but not to simulate the actual heater/sprayer hardware. The user input specifies a desired-pressure set point, PSET, and a pressure deviation, DTMAX. Heater/sprayer logic adds or removes a maximum power of QHEAT when the PRIZER pressure is lower or higher than PSET, respectively. The power that is input to the PRIZER-component fluid is proportional to the difference between PSET and P(1), the pressure in cell 1; that is,

$$Qin = \min[\, 1, \max[\, -1, \{ PSET - P(1) \} \,/\, DPMAX \,]] \cdot QHEAT, \qquad (4\text{-}4)$$

with the magnitude of Qin less than or equal to QHEAT. This power is distributed over all PRIZER-component fluid cells having liquid. The fraction of power input to theliquid in each mesh cell is equal to the fraction of the PRIZER's total liquid mass that is in that cell. If pressure control is not desired, then set QHEAT to zero.

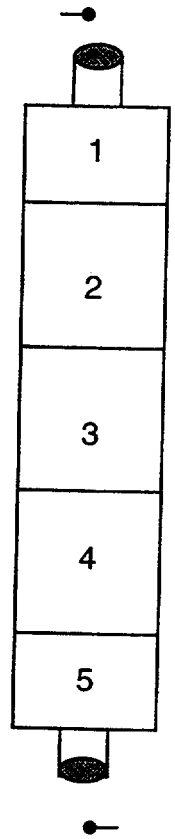

Fig. 4-8. PRIZER-component noding diagram.

Power is not added to the liquid if the collapsed liquid level X_L is less than the input-specified minimum level, ZHTR. The collapsed liquid level is determined as follows. The total liquid volume is summed over all mesh cells of the PRIZER component and then sequentially the volume Vol_j of each cell, starting at the bottom cell NCELLS, is subtracted from that total liquid volume until the remainder of the total liquid volume is less than or equal to the volume of the next cell I. The collapsed liquid level is the summed length of the collapsed liquid in those NCELLS – I + 1 cells

$$X_L = \sum_{i=NCELLS}^{I-1} \Delta X_j + \Delta X_I \cdot \frac{\left(Vol_L - \sum_{i=NCELLS} Vol_i \right)}{Vol_I} \tag{4-5}$$

where $Vol_L = \sum_{j=1}^{NCELLS} (1-\alpha_j) \cdot Vol_j$ and α_j is the gas volume fraction in volume Vol_j of each cell j. Note that X_L is the collapsed-liquid coolant-channel length and not the vertical height of the collapsed liquid.

Wall-friction coefficients are calculated by specifying an NFF friction-factor correlation option value at each cell interface of the component. The homogeneous-flow, friction-factor correlation option |NFF| = 1 is suggested for the PRIZER-component wall. Irreversible form losses resulting from abrupt flow-area changes can be evaluated when NFF < 0 is input. Irreversible form losses resulting from nonabrupt flow-area changes and flow around internal sprayer/heater hardware can be modeled by FRIC (and RFRIC when NFRC1 = 1) additive loss coefficients at each cell interface.

The text output edit for a PRIZER component is similar to that of a PIPE component with the addition of four variables specific to the pressurizer: (1) discharge liquid volumetric flow, (2) total liquid volume discharged, (3) collapsed liquid level, and (4) heater/sprayer power input to the pressurizer liquid at the time of the output edit.

4.6. PUMP Component

The PUMP component describes the interaction of the system fluid with a centrifugal pump. Its model calculates the pressure differential across the pump impeller and the pump impeller's angular velocity as a function of the fluid flow rate and fluid properties. The model can simulate any centrifugal pump and allows for the inclusion of two-phase effects.

The pump is modeled by a 1D hydraulic component with N = NCELLS ≥ 2 mesh cells. Figure 4-9 shows a typical noding diagram for the PUMP component. The pump impeller's source of momentum to the fluid is modeled as a source to the motion equation of the interface between cells 1 and 2. The momentum source is positive for normal pump operation where a pressure rise occurs from cell 1 to cell 2. This results in increasing cell numbers and a positive coolant velocity in the normal flow direction.

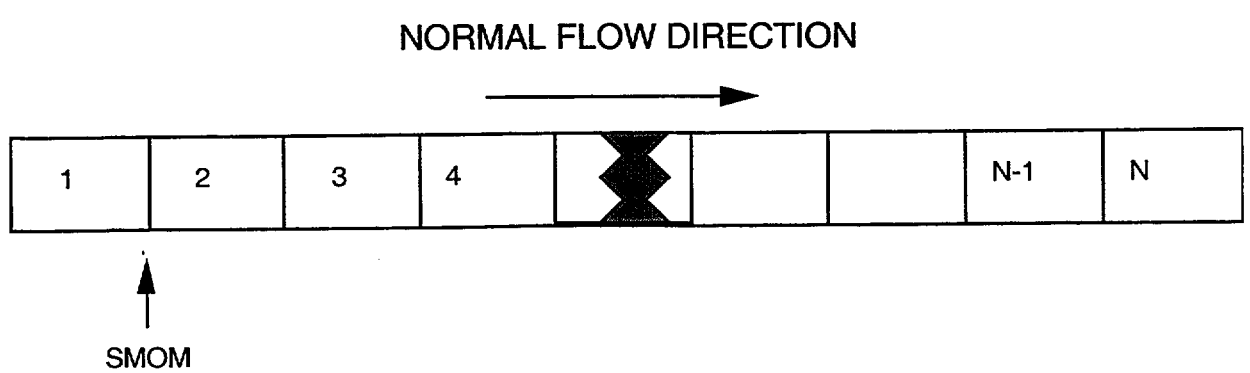

Fig. 4-9. PUMP-component noding diagram.

The following considerations were made in creating the PUMP component:

1. compatibility with adjacent components should be maximized,
2. choking at the pump-impeller interface should be predicted automatically by the pump-curve data, and
3. the calculated pressure rise across the pump-impeller interface should agree with that measured at steady-state conditions.

The first two criteria precluded the use of a lumped-parameter model. The PUMP component is the combination of a PIPE component with pump-curve correlations defining the pump-impeller interface momentum source, SMOM.

The PUMP-component model is identical to the 1D PIPE-component model except that the motion equations for the interface between cells 1 and 2 are approximated by

$$\frac{V_l^{n+1} - V_l^n}{\Delta t} = \frac{[P_l^{n+1} - P_2^{n+1} + \{\Delta P^n + (\delta\Delta P/\delta V)^n \cdot (V_l^{n+1} - V_l^n)\}]}{\bar{\rho}_{m,(3/2)}^n \cdot \Delta X_{3/2}} - g \cdot \cos\theta \qquad (4\text{-}6)$$

and

$$V_g^{n+1} = V_l^{n+1} , \qquad (4\text{-}7)$$

where $\{\Delta P^n + (\delta\Delta P/\delta V)^n \cdot (V_l^{n+1} - V_l^n)\}$ is the SMOM first-order approximated pressure rise momentum source across the pump-impeller interface at the end of timestep $n+1$ evaluated from the pump-curve correlations. The steady-state solution form of Eq. (4-6) is

$$\Delta P = P_2 - P_1 + \bar{\rho}_{m \cdot 3/2} \cdot g \cdot \Delta X_{3/2} \cdot \cos\theta \quad , \qquad (4\text{-}8)$$

which is the desired model. Friction and form losses do not enter explicitly into the pump-impeller interface motion equation. Therefore, wall drag and additive friction losses are not modeled between the centers of cells 1 and 2 [NFF(2) = 0 and FRIC(2) = 0.0].

The pressure rise ΔP^n and its derivative with respect to the coolant velocity $(\delta P / \delta V)$ for the pump-impeller interface is evaluated only once at the beginning of each timestep. This momentum source is applied in the coolant motion equation at the pump-impeller interface.

The correlation pump curves describe the pump head and torque response as a function of fluid volumetric flow and pump-impeller speed. Homologous curves (one curve segment represents a family of curves) are used for this description because of their simplicity. These curves describe, in a compact manner, all operating states of the pump obtained by combining positive or negative pump-impeller angular velocities with positive or negative fluid volumetric flows.

The following definitions are used in the subsequent development:

$$H = \text{the pump head, } \Delta P/\rho_m \text{ (\{Pa m}^3\text{ kg}^{-1}\text{, m}^2\text{ s}^{-2}\text{, or N m kg}^{-1}\text{\}, lbf ft lbm}^{-1}\text{)},$$
$$Q = \text{the impeller-interface volumetric flow rate, } A_{3/2} \cdot V_{3/2} \text{ (m}^3\text{ s}^{-1}\text{, ft}^3\text{ s}^{-1}\text{), and}$$
$$\Omega = \text{the pump-impeller angular velocity (rad s}^{-1}\text{, rpm)} \quad , \tag{4-9}$$

where ΔP is the pressure rise across the pump-impeller interface and ρ_m is the impeller-interface upstream coolant-mixture density. To allow one set of curves to be used for a variety of pumps, the following normalized quantities are used:

$$h = H/H_R ,$$
$$q = Q/Q_R \text{, and}$$
$$\omega = \Omega/\Omega_R, \tag{4-10}$$

where H_R is the rated head RHEAD, Q_R is the rated volumetric flow RFLOW, and Ω_R is the rated pump-impeller rotational speed ROMEGA for the pump. The pump similarity relations (Ref. 4-3) show that

$$h/\omega^2 = f(q/\omega) . \tag{4-11}$$

For small ω this correlation is not satisfactory, and the following combination of variables is used,

$$h/q^2 = f(\omega/q) . \tag{4-12}$$

Equation (4-11) is used in the range $0 \leq | q/\omega | \leq 1$ and results in two separate curves, one for $\omega > 0$ and one for $\omega < 0$. Equation (4-12) is used in the range $0 \leq | \omega/q | \leq 1$ and yields two separate curves, one for $q > 0$ and one for $q < 0$. The four resulting curve segments, as well as the curve selection logic used in TRAC-M, are shown in Table 4-2.

To account for two-phase coolant effects on pump performance, the pump curves are divided into two separate regimes. Data indicate that two-phase coolant pump performance in the gas volume-fraction range of 0.2 to 0.8 is degraded significantly in comparison with its performance at gas volume fractions outside this range. One set of curves describes the pump performance for single-phase coolant (at a 0.0 or 1.0 gas volume fraction), and another set describes the two-phase, fully degraded performance at gas volume fractions between 0.0 and 1.0. For single-phase conditions, the curve segments for correlation Eq. (4-11) are input as HSP1 for $\omega > 0$ and HSP4 for $\omega < 0$, and Eq. (4-12) curve segments are input as HSP2 for $q > 0$ and HSP3 for $q < 0$. The two-phase, fully degraded version of Eq. (4-11) is input as curve HTP1 for $\omega > 0$ and HTP4 for $\omega < 0$ and Eq. (4-12) curve segments are input as HTP2 for $q > 0$ and HTP3 for $q < 0$.

The pump head at any gas volume fraction is calculated from the relationship,

$$H = H_1 - M(\alpha) \cdot [H_1 - H_2] \ , \tag{4-13}$$

where

H = the total pump head,
H_1 = $h_1 H_R$ = the single-phase pump head (h_1 is the nondimensional head from the single-phase homologous head curves),
H_2 = $h_2 H_R$ = the two-phase fully degraded pump head (h_2 is the non-dimensional head from the fully degraded homologous head curves),
$M(\alpha)$ = the head degradation multiplier HDM, and
α = the upstream gas volume fraction.

At this point, no knowledge of the coolant mixture density is required to calculate H from the homologous head curves. However, the upstream coolant mixture density is used to convert the total pump head H to the pressure rise across the pump impeller, by the definition of Eq. (4-9).

The development of homologous torque curves parallels the previous development for homologous head curves. The dimensionless hydraulic torque is defined by:

$$\beta = T_{hy} / T_R \quad , \tag{4-14}$$

where T_{hy} is the hydraulic torque and T_R is the rated torque RTORK. The convention used is that a positive T_{hy} works to retard positive pump angular velocity. The dimensionless torque β correlated as either β / ω or β / q just as the dimensionless head h was correlated. For single-phase conditions, the correlations yield the corresponding four curve segments TSP1, TSP2, TSP3, and TSP4. The two-phase fully degraded correlations produce four corresponding curves: TTP1, TTP2, TTP3, and TTP4. The homologous torque-curve segments are correlated in the same manner as the head-curve segments shown in Table 4-2 (replace h with β). For the special case of $\omega = q = 0.0$, TRAC-M sets $\beta_1 = \beta_2 = 0.0$.

TABLE 4-2
DEFINITIONS OF THE FOUR CURVE SEGMENTS THAT DESCRIBE THE HOMOLOGOUS PUMP-HEAD CURVES[a]

Curve Segment	q/ω	ω	q	Correlation
1	≤ 1	> 0		$\left[\frac{h}{\omega^2} = f\left(\frac{q}{\omega}\right)\right]$
4	≤ 1	< 0		
2	≤ 1		> 0	$\left[\frac{h}{q^2} = f\left(\frac{\omega}{q}\right)\right]$
3	≤ 1		< 0	

[a]For the special case of both $\omega = 0.0$ and $q = 0.0$, the code sets $h = 0.0$

The single-phase torque T_1 is dependent upon the fluid density and is calculated from

$$T_1 = \beta_1 \cdot T_R \cdot (\rho_m/\rho_R) , \tag{4-15}$$

where β_1 is the dimensionless hydraulic torque from the single-phase homologous torque curves, ρ_m is the pump upstream mixture density, and ρ_R is the rated density RRHO. The density ratio is needed to correct for the density difference between the pumped fluid and the rated condition. Similarly, two-phase fully degraded torque T_2 is obtained from

$$T_2 = \beta_2 \cdot T_R \cdot (\rho_m/\rho_R) , \tag{4-16}$$

where β_2 is the dimensionless hydraulic torque from the two-phase fully degraded homologous torque curves. For two-phase conditions, the pump-impeller torque is calculated from

$$T = T_1 - N(\alpha) \cdot [T_1 - T_2] , \tag{4-17}$$

where T is the total pump-impeller torque and $N(\alpha)$ is the torque degradation multiplier TDM.

In addition to the homologous head and torque curves, the head and torque degradation multipliers in Eqs. (4-13) and (4-17) are input specified. These functions of gas volume fraction are nonzero only in the gas volume-fraction range where the pump head and torque are either partially or fully degraded.

The PUMP component treats the pump-impeller angular velocity Ω as a constant value that is input each timestep (and may vary) when the motor is energized. After the drive motor is tripped, the time rate of change of the pump-impeller angular velocity Ω is proportional to the sum of the moments acting on it and is calculated from

$$I\frac{\partial \Omega}{\partial t} = -\sum_i T_i = -(T + T_f) \quad , \tag{4-18}$$

where I is the combined impeller, shaft, and motor-assembly moment of inertia EFFMI, T is the hydraulic torque on the pump-impeller, and T_p is the torque caused by friction and by the bearing and windage.

$$T_f = C_0 + C_1\frac{\Omega}{\Omega_R} + C_2\frac{\Omega|\Omega|}{\Omega_R^2} + C_3\frac{\Omega^3}{\Omega_R^3} \quad , \tag{4-19}$$

where C_0, C_1, C_2, and C_3 are input constants TFR0, TFR1, TFR2, and TFR3, respectively. If the pump-impeller angular velocity (pump speed) drops below the input specified value of TFRB, then a second set of constants are used to determine T_f.

$$T_f = C'_0 + C'_1\frac{\Omega}{\Omega_R} + C'_2\frac{\Omega|\Omega|}{\Omega_R^2} + C'_3\frac{\Omega^3}{\Omega_R^3} \quad , \tag{4-20}$$

where C'_0, C'_1, C'_2, and C'_3 are input constants TRFL0, TRFL1, TRFL2, and TRFL3, respectively. The constants C_0, C_1, C_2, C_3, C'_0, C'_1, C'_2, and C'_3 should be determined from experimental data. As the pump speed approaches zero, the C_0 and C'_0 contributions are linearly decreased to zero to ensure that there are no friction losses at a pump speed of zero. The reduction of C_0 and C'_0 contributions to T_f begins when the pump speed drops to 1/10 of the rated speed.

The hydraulic torque T is evaluated using the homologous torque curves and Eq. (4-17); it is a function of the volumetric flow, the upstream gas volume fraction, the upstream coolant-mixture density, and the pump-impeller angular velocity. For timestep n+1, Eq. (4-18) is evaluated explicitly as

$$\Omega^{n+1} = \Omega^n \cdot \frac{\Delta t}{I}\left[T(Q, \alpha, r, \Omega) + C_0 + C_1\frac{\Omega^n}{\Omega_R} + C_2\frac{\Omega^n|\Omega^n|}{\Omega_R^2} + C_3\frac{(\Omega^n)^3}{\Omega_R^3}\right] \quad . \tag{4-21}$$

The wall heat-transfer NODES, wall-friction NFF, and CHF-calculation ICHF options are the same for the PUMP component as for the PIPE component. In addition, the following options are specified: pump type IPMPTY, trip-controlled pump-motor action IPMPTR, reverse rotation IRP, degradation IPM, and pump-curve type OPTION. Input variables IPMPTR and NPMPTB specify, respectively, the controlling trip ID number for pump-trip action and the number of pairs of points in the pump-speed table PMPTB. If IPMPTR = 0, no pump-trip action occurs, and the pump runs for the entire calculation at the constant pump-impeller angular velocity (rotational speed) OMEGAN. If IPMPTR $\neq 0$ and the IPMPTR trip is initially OFF, the pump-impeller angular velocity is defined by signal variable or control block ID number NPMPSD or by OMEGAN when NPMPSD = 0. If the IPMPTR trip is OFF after being ON, OMGOFF defines the pump-impeller angular velocity. In all situations, the rate of change of the pump-impeller angular velocity is constrained by its maximum rate ROMGMX.

Three types of pumps are available. For pump type IPMPTY = 0, the pump-impeller interface coolant-mixture velocity is defined by signal variable or control block NPMPSD when trip IPMPTR is OFF and by the PMPTB coolant-mixture velocity table when trip IPMPTR is ON. For pump type IPMPTY = 1, the pump-impeller angular velocity is defined by OMEGAN when NPMPSD = 0 or by signal variable or control block NPMPSD when trip IPMPTR is OFF and by the PMPTB pump-speed table when trip IPMPTR is ON. The independent variable for the PMPTB table may be elapsed time since the trip was set ON or any signal variable or control block. For pump type IPMPTY = 1, the torque calculation is not used. Pump type IPMPTY = 2 is similar to IPMPTY = 1 except that a PMPTB pump-speed table is not input. Instead, the pump-impeller angular velocity is calculated from Eq. (when trip IPMPTR is ON.

If the IRP = 1 reverse-rotation option is specified, the pump-impeller is allowed to rotate in both the forward and reverse directions. If reverse rotation is not allowed by specifying IRP = 0, the pump-impeller will rotate in the forward direction only. In this case, if negative rotation is calculated (for pump type IPMPTY = 2 with trip IPMPTR ON), the pump-impeller angular velocity is set to zero. If IRP = 0 and a negative pump-impeller angular velocity is defined by input parameters, fatal error messages will be printed by subroutines PUMPD, PUMPX, and PUMPSR, and the calculation will abort.

If the IPM = 1 degradation option is specified, two-phase degraded pump head and torque are calculated from Eqs. (and (. If the degradation option is turned off by IPM = 0, only the single-phase pump head and torque homologous curves are used [equivalent to setting $M(\alpha)$ and $N(\alpha)$ to zero in Eqs. (4-13) and (4-17)].

The user may specify pump homologous curves through input by OPTION = 0 or may use the built-in pump curves of OPTION = 1 or 2. The OPTION = 1 built-in pump curves is based on the Semiscale MOD1 system pump (Refs. 4-4 through 4-7). The Semiscale pump curves for single-phase homologous pump head HSP, two-phase fully degraded homologous pump head HTP, pump-head degradation multiplier HDM, single-phase homologous torque TSP, and torque degradation multiplier TDM are provided in Figs. 4-10 through 4-19, respectively. The OPTION = 2 built-in pump curves is based on the Loss-of-Fluid Test (LOFT) system pump (Ref. 4-8). The LOFT pump curves for single-phase homologous pump head HSP, two-phase fully degraded homologous pump head HTP, pump-head degradation multiplier HDM, single-phase homologous torque TSP, and torque degradation multiplier TDM are shown in Figs. 4-15 through 4-19, respectively. For lack of data, the two-phase fully degraded homologous torque curves TTP for both Semiscale and LOFT pumps are zero. Where applicable, the curves are numbered corresponding to the conditions provided in Table 4-2.

Because these homologous curves are dimensionless, they can describe a variety of pumps by specifying the desired rated head RHEAD, rated torque RTORK, rated volumetric flow RFLOW, rated density RRHO, and rated pump-impeller rotational speed ROMEGA as input. We recommend that for full-scale PWR analyses, plant-specific pump curves be input; however, if such data are unavailable, the OPTION = 2 LOFT pump curves generally should be used.

There are several restrictions and limitations in the current version of the PUMP component. Because there is no pump motor torque vs pump-impeller speed model, the pump-impeller rotational speed is assumed to be input if the pump motor is energized. Pump noding is restricted so that the cell numbers increase in the normal flow direction where the total number of component cells NCELLS > 2, the pump momentum source is located at the interface between cells 1 and 2 of the PUMP component, and the wall friction and additive loss coefficient between cells 1 and 2 are zero [NFF(2) = 0 and FRIC (2) = 0.0]. A flow-area change should not be modeled between cells 1 and 2. Finally, the pump-head degradation multiplier and the torque degradation multiplier are assumed to apply to all operating states of the pump.

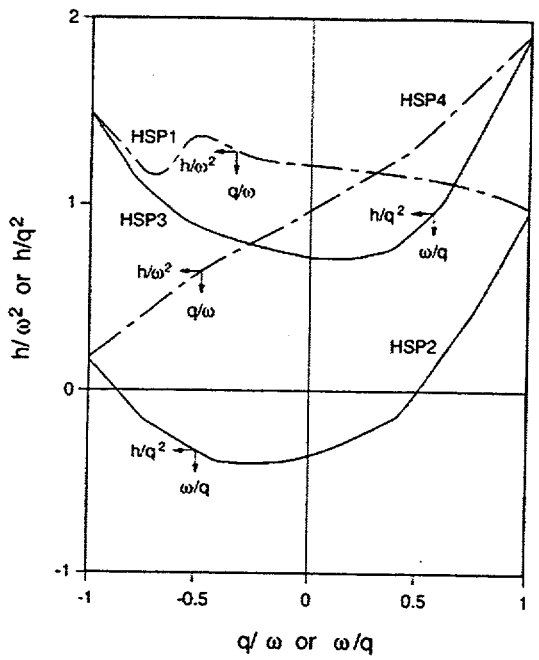

Fig. 4-10. Semiscale single-phase homologous pump-head curves.

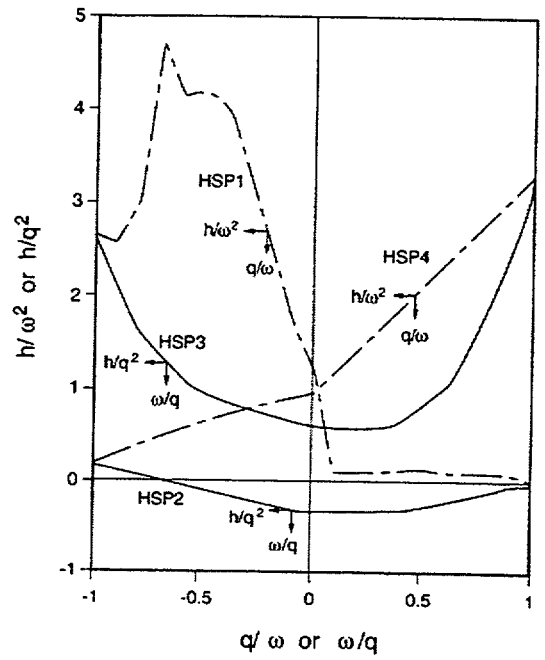

Fig. 4-11. Semiscale two-phase fully degraded homologous pump-head curves.

The pump model does not account for the addition of energy to the liquid caused by irreversible effects. If this is considered to be important, that energy can be added to the coolant in the first PIPE or TEE component downstream of the pump. This may be done with a power deposited in the coolant component-action table that defines the amount of energy deposited directly into the coolant based on the pump operating condition.

The PUMP component input consists of the same geometric and initial-condition hydrodynamic data that are required for the PIPE component. In addition, parameters specific to the pump model are required, as described above and in the input specifications (Section 6.0.). The PMPTB table as well as the homologous pump-curve arrays must be input in the following order:

$$x(1), y(1), x(2), y(2), \ldots, x(n), y(n) \quad .$$

Here x is the independent variable and y is the dependent variable. Furthermore, the independent variable must increase monotonically in the order of its input: i.e.,

$$x(1) < x(2) < \ldots < x(n-1) < x(n) \quad . \tag{4-22}$$

Linear interpolation is used within the tabular arrays.

4.7. SEPD Component

Note: SEPD Component. The SEPD component described here is a model that was brought over from TRAC-PF1/MOD2 to TRAC-M. A new separator model will replace the SEPD component in TRAC-M/F90. The current model is not now supported in either the F77 or F90 code.

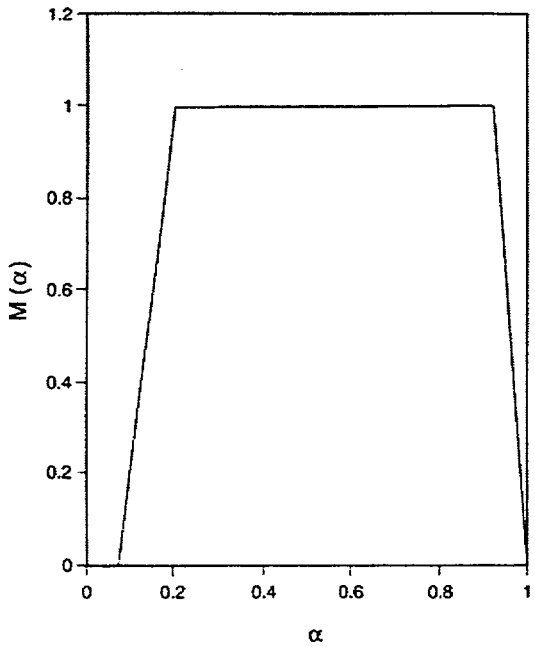

Fig. 4-12. Semiscale pump-head degradation multiplier curve.

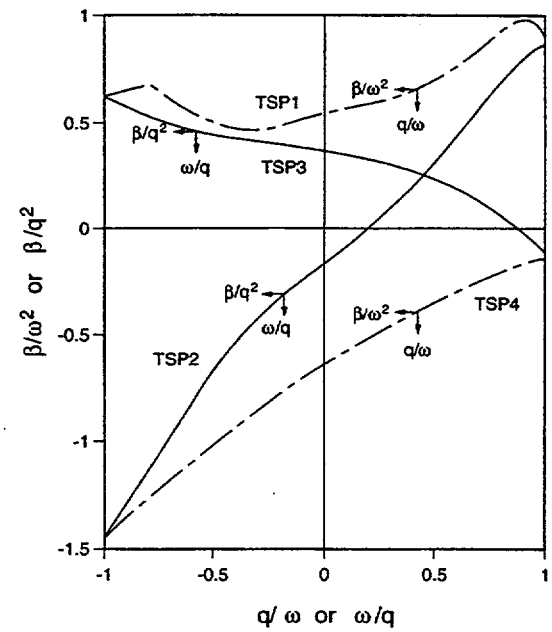

Fig. 4-13. Semiscale single-phase homologous toque curves.

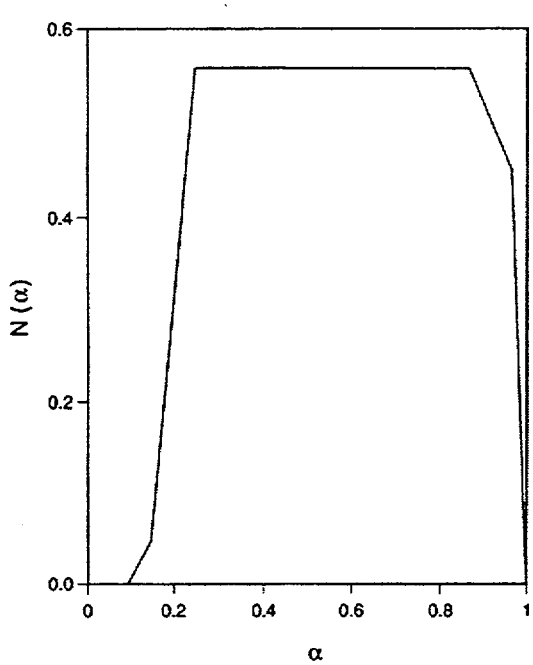

Fig. 4-14. Semiscale torque degradation multiplier curve.

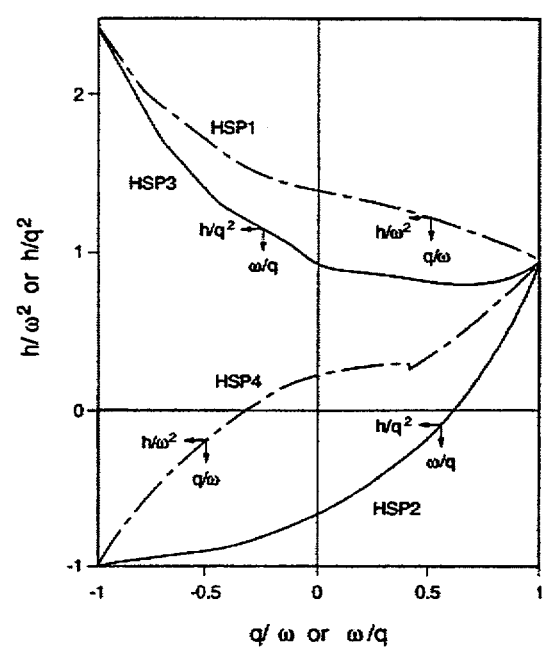

Fig. 4-15. LOFT single-phase homologous pump-head curves.

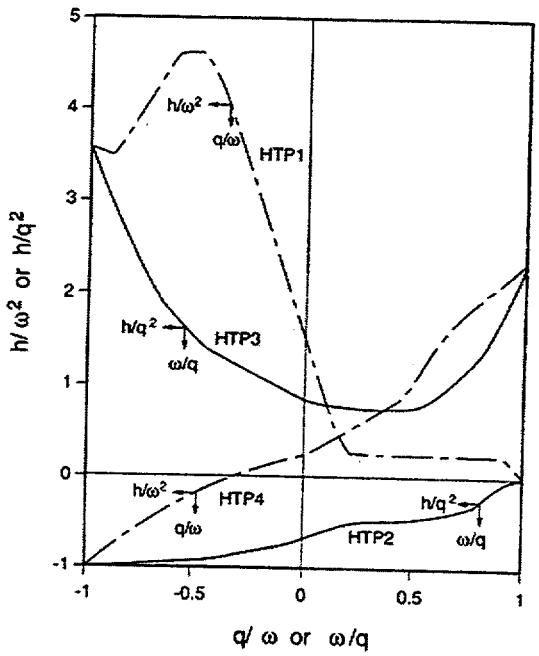

Fig. 4-16. LOFT two-phase fully degraded homologous pump-head curves.

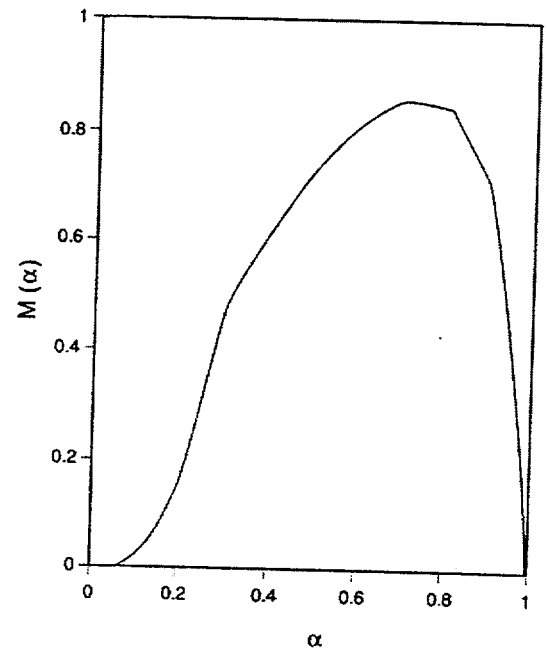

Fig. 4-17. LOFT pump-head degradation multiplier curve.

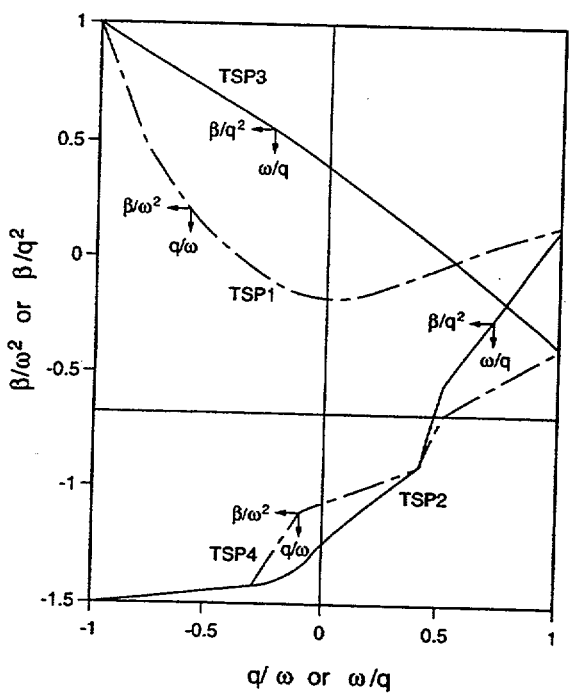

Fig. 4-18. LOFT single-phase homologous torque curves.

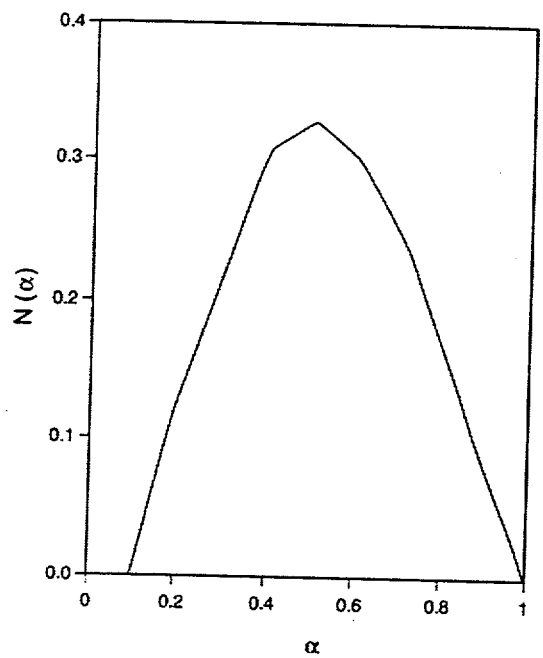

Fig. 4-19. LOFT torque degradation multiplier curve.

The SEPD separator component is a generalization of the TEE component in which the user specifies the degree of two-phase coolant separation that occurs in the JCELL internal junction cell. In other respects, the SEPD component is identical to the TEE component that is described in Section 4.8. This component is modeled like the separator in the TRAC-BD1 computer program (Ref. 4-8).

Use of the SEPD component is not recommended at the present time. The SEPD model is a direct derivative of an early separator model implemented in TRAC-B. Subsequent work with the TRAC-B separator model at Pennsylvania State University determined that the model would only function in the perfect separator function mode. The model implemented in TRAC-M carries the same limitation.

The user may specify the degree of separation in one of three ways.

Option 1. Ideal separator. The user supplies values for the separator carryover XCO [defined as the liquid mass flow carried upward on the primary side divided by the total mass flow carried upward on the primary side, where both are evaluated at the interface between JCELL and JCELL+1 (Fig. 4-20)] and the separator carryunder XCU (defined as the gas mass flow carried upward on the secondary side divided by the total mass flow carried upward on the secondary side, where both are evaluated at the secondary-side interface between JCELL and the first cell of the secondary-side channel). These user-supplied parameter values are used throughout the calculation regardless of the changing conditions in the SEPD component.

Option 2. Mechanistic separator. The user supplies geometric parameters that describe the physical separator. The coding that supports this option was written by General Electric Company (GE), and it assumes a design similar to that used in a GE BWR steam/water separator. If the user wishes to model a separator that differs substantially from a GE separator, then this option probably will produce erroneous results. Details of the design and the implementation of this option may be found in Ref. 4-9 by Cheung et al.

Option 3. User-prescribed separator. The user supplies performance data for the separator as a function of separator input conditions. For example, XCO might be a function of the total mass flow and quantity of the input stream, or XCO might be a function of the liquid mass flow and gas volume fraction. Such data for the separator carryover and separator carryunder are required. To use this option, the user indicates in the input two control-block numbers, ICBS1 and ICBS2, that have been designed to evaluate the values of XCO and XCU. Control-block function numbers 101 or 102, which linearly interpolates tabular data as a function of one or of two or three independent variables, is useful in defining XCO and XCU from tabular data. For these tabular-data control blocks, if independent

variable conditions that are not specified in the input data occur, the dependent-variable value is not extrapolated from the existing tabular data. Instead, the y(1) or y(n) tabular value in Eq. ((is defined. Within the independent-variable value range of the tabular data, the dependent-variable value is linearly interpolated.

The SEPD numerical model assumes that the primary side of the SEPD component is directed upwards (that is, the primary-side interface GRAV values are -1.0) and that the secondary side is directed downwards (the secondary-side interface GRAV values are 1.0 and the $\cos\phi$ value is COST = 1.0 for a primary-to-secondary side angle of $\phi = 0°$). Several conditions that, by design, temporarily deactivate the separator are reverse total coolant mass flow at the separator inlet, reverse gas mass flow at the separator inlet, and overly wet inlet conditions (gas volume fraction < 0.05).

4.8. TEE Component

The TEE component models the thermal hydraulics of three piping branches, two of which lie along a common channel while the third enters at an angle ϕ from the other channel. In TRAC-M, the TEE component is treated as two PIPEs, as shown in Fig. 4-21. Phi is defined as the angle from the low-numbered cell end of PIPE 1 to PIPE 2. The low-numbered cell end of PIPE 2 connects to PIPE 1. PIPE 1 extends from cell 1 to cell NCELL1 and connects to PIPE 2 at cell JCELL. PIPE 2 begins at cell 1 and ends at cell NCELL2. The value of NCELLS in Fig. 4-21 accounts for a "dummy" TEE cell (used to model the internal TEE junction) that is internal to TRAC-M. In the XTV graphics system the TEE cell-numbering is continuous across the two PIPEs, starting at cell 1 of PIPE 1, and does not count the "dummy" cell. The cell-interfaces in XTV are also numbered continuously across the PIPEs, starting at face 1 at JUN1, going to face NCELL1 in PIPE 1 (the face at JUN2 is accessed from the adjoining component at that junction), then to face NCELL1+1 at the internal TEE junction (the face at JUN3 is accessed from the adjoining component at that junction).

Mass, momentum, and energy convection occur across all three interfaces of JCELL. PIPE 2 sees this convection across its connection to JCELL as a boundary condition from cell JCELL of PIPE 1; PIPE 1 sees this convection across its connection to secondary-side cell 1 as a special JCELL boundary condition from cell 1 of PIPE 2. Liquid or gas can be prevented from entering the TEE secondary side by setting the input value of FRIC at the interface between JCELL and secondary-side cell 1 to a value greater than 10^{20} or less than -10^{20}, respectively. Actually, such a liquid or gas separator can be modeled at anymesh-cell interface. A generalized separator model is available in the SEPD component that otherwise is a TEE component.

Detailed input-data specifications for a TEE component are given in Section 6.3.7.7. Input and output information is very similar to that of a PIPE component except that two separate PIPE-like parts are involved.

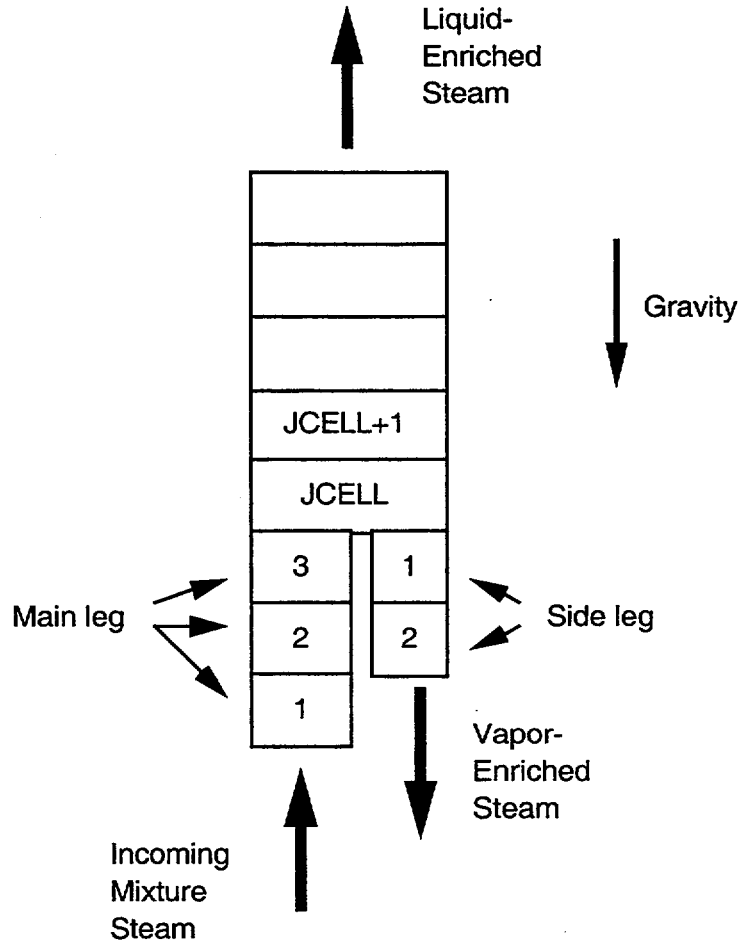

Fig. 4-20. SEPD-component noding diagram.

4.9. TURB Component

Note: TURB Component. The current TURB component is a model that was inherited from TRAC-PF1/MOD2; it is only in TRAC-M/F77 (not in F90), and its use is discouraged. The TURB component had received minimal support in MOD2, and a new turbine model will be included in TRAC-M/F90. A description of the MOD2 TURB component can be found in Ref. 1-4.

4.10. VALVE Component

The VALVE component is used to model various types of valves associated with light-water reactors. The valve action is modeled by a component action that adjusts the flow area and hydraulic diameter at a cell interface of a 1D hydraulic component as shown in Fig. 4-22. The VALVE component's adjustable flow area may not be located at a VALVE-component junction unless that junction is connected to a BREAK component.

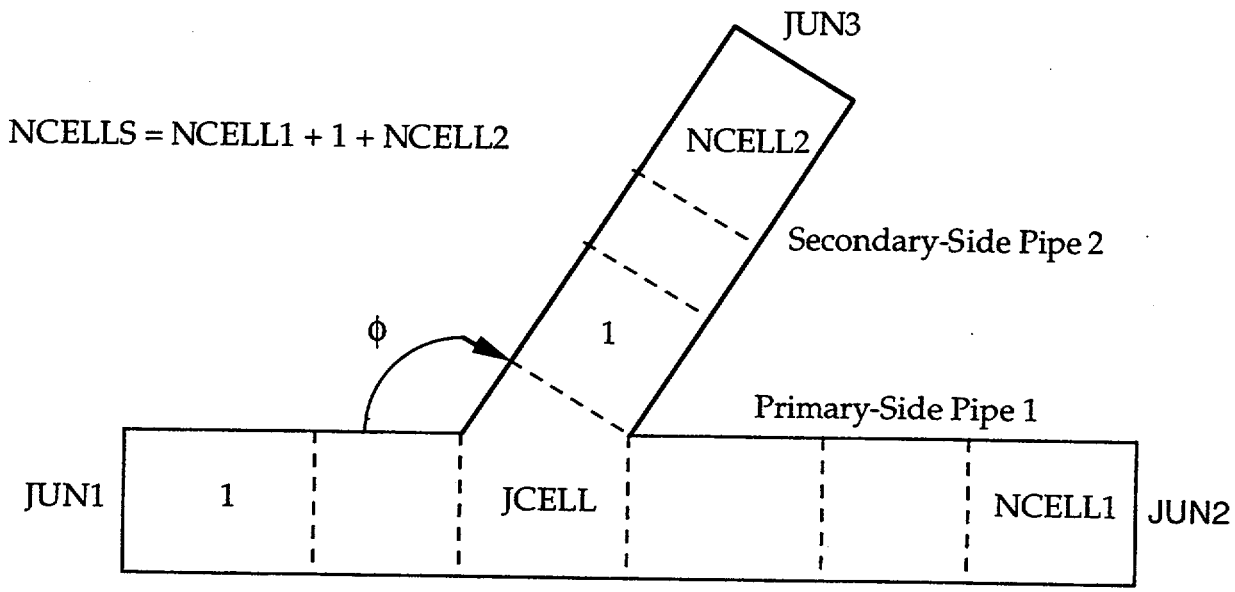

Fig. 4-21. TEE-component noding diagram.

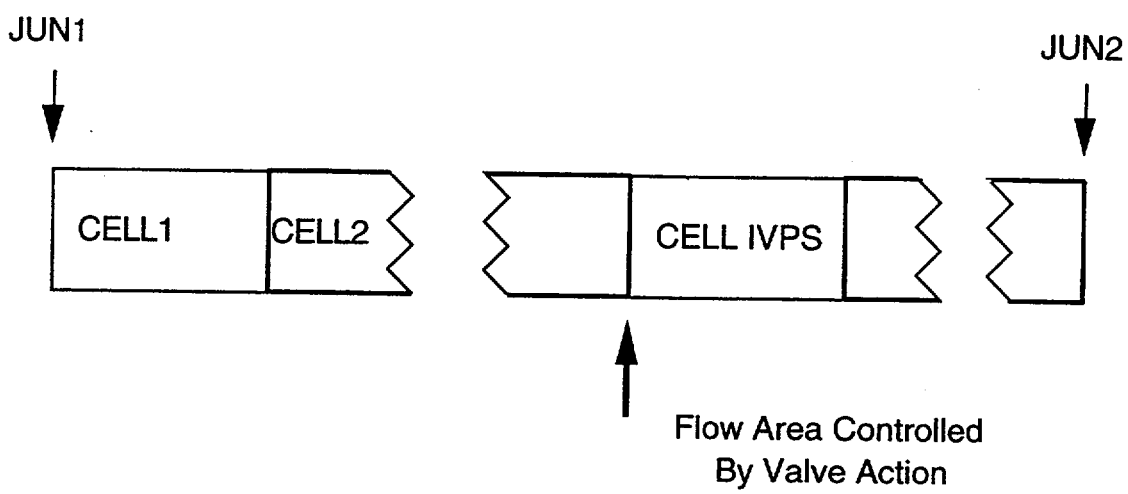

Fig. 4-22. VALVE-component noding diagram.

Two forms are provided for specifying the adjustable flow area of the valve. The adjustable flow area FA can be computed directly from an adjustable flow-area fraction FAVLVE according to

$$FA = FAVLVE \cdot AVLVE \tag{4-23}$$

where AVLVE is the input specified fully open adjustable flow area of the VALVE. In the second form, the flow area is calculated from the XPOS relative position of the valve stem where a guillotine-like blade is assumed to cut a circular cross-section flow channel. XPOS is the fraction of the circular cross-section diameter that the blad does not occupy.

FAVLVE = 1.0 or XPOS = 1.0 corresponds to a fully open valve with flow area AVLVE. The input-specified hydraulic diameter HVLVE for the VALVE's adjustable interface is its fully-open value. As the adjustable-interface flow area changes, its hydraulic diameter is evaluated based on the flow area.

FAVLVE or XPOS is input specified as a constant or a tabular function defined by a valve-adjustment table. An input-specified trip with ID number IVTR may control the evaluation of the table. The valve-adjustment table is evaluated only when the trip set status is ON. To increase the flexibility of modeling various types of valves, two valve tables may be input for a trip-controlled valve. The first table is evaluated when the trip set status is $ON_{forward}$, and the second table is evaluated when the trip set status is $ON_{reverse}$ (Section 6.3.7.10.). Consistency is maintained in the interpolated state from both tables. The independent variable for the table/s is a modeled-system parameter defined by a signal variable or a control block.

Many different types of valves can be modeled because of the flexibility to choose the independent variable of the VALVE component-action table/s and to perform table evaluation under trip control. Simple valves that either open or close when a trip is set ON may be modeled using a VALVE table that has relative time (since trip initiation) as the independent variable (a NVTB# < 0 VALVE table# = 1,2). Only two pairs of tabular data, (t_1, y_1) and (t_2, y_2) where $t_1 < t_2$ and y = FAVLVE or XPOS, are needed to define a constant rate of adjustment. The $(y_2 - y_1)/(t_2 - t_1)$ slope of the data is positive for a VALVE that opens and negative for a VALVE that closes. The initial or last evaluated FAVLVE or XPOS closure state of the VALVE is the interpolated value of y for t = 0. The minimum and maximum closure states of the VALVE are y_1 and y_2, respectively. Valve leakage can be simulated by restricting the y_1 value to be greater than zero. Simple valves can be used to model pipe breaks or the opening of rupture disks where $t_2 - t_1$ is small for a rapid opening of the VALVE adjustable flow area.

A simple check valve can be modeled by using a VALVE table with the appropriate pressure gradient across the adjustable VALVE interface as its independent variable. The effect of hysteresis, where the pressure gradient is different for check-valve opening and check-valve closing, can be modeled with two VALVE tables. Alternatively, a check valve can be modeled as a trip-controlled VALVE with the pressure gradient defining the trip signal. When the trip is set $ON_{forward}$ or $ON_{reverse}$ for a pressure gradient that is large enough to open or small enough to close the check valve, the VALVE table evaluates the rate of FAVLVE or XPOS adjustment change.

A steam-flow control valve (SFCV) or power-operated relief valve (PORV) can be modeled using an $ON_{reverse}$ - OFF - $ON_{forward}$ trip to control it. With the trip signal being the monitored pressure, the trip's S_1, S_2, S_3, and S_4 setpoints are the start closing pressure, end closing pressure, end opening pressure, and start opening pressure, respectively.

The rate of opening ($ON_{forward}$ state) defined by the first VALVE table can be different from the rate of closing ($ON_{reverse}$ state) defined by the second VALVE table. The rate of opening and closing will be the same if only the first VALVE table is defined. A relative value (summed change each timestep times the trip set-status value) independent variable needs to be defined for the VALVE table/s. A quick opening/closing PORV can be modeled by using a VALVE table with the monitored pressure as the independent variable and a step-change function for FAVLVE or XPOS. It is important that the step function not be too steep or the valve flow area may oscillate each timestep between being open and closed. This is due to valve fluid flow and pressure coupling where valve over-adjustment results in the oscillation. A bank of PORVs can be modeled with a single VALVE component in the same manner by using a multistep function to simulate the multiple pressure set points corresponding to the multiple valves.

The VALVE closure state is evaluated at the start of each timestep; the VALVE has a step change at the beginning of the timestep and is held constant during the timestep.

4.11. VESSEL Component

The VESSEL component generally models a PWR vessel and its associated internals. The component is 1-, 2-, or 3D in Cartesian or cylindrical geometry and uses a six-equation, two-fluid model to evaluate the flow through and around all internals. The internals of a PWR vessel include the downcomer, fuel-assembly reactor core, and upper and lower plena. Modeling options and features incorporated into the VESSEL component are designed mainly for LOCA analysis, but the VESSEL component can be applied to other transient analyses as well. A mechanistic reflood model that evaluates quenching or dryout for an arbitrary number of quench fronts is programmed (see Section 4.3. for remarks on the additional top-down/bottom-up reflood model that is part of TRAC-M/F77). This requires that the VESSEL component that models the vessel be coupled to HTSTR components that model the fuel-assembly RODs or SLABs. A detailed description of the fluid-dynamics and solution methods for the 3D VESSEL component can be found in the TRAC-M Theory Manual. In this section, the VESSEL geometry and other important related considerations will be discussed.

A 3D, two-fluid, thermal-hydraulic model in (r, θ, z) cylindrical geometry will be described. The user, however, can select (x, y, z) Cartesian rectangular geometry as well. A regular mesh-cell grid, with variable mesh spacings in each of the three directions of a right-circular cylinder, defines the geometric region of solution of the VESSEL. This encompasses the downcomer, reactor core, and upper and lower plena, as shown in Fig. 4-23. The user defines the mesh by input specifying the radial r (or x), azimuthal θ (or y), and axial z coordinates of the mesh-cell boundaries:

$$
\begin{aligned}
&r_i \quad i = 1, \ldots, NRSX \quad , \\
&\theta_i \; j = 1, \ldots, NTSX \quad , \text{and} \\
&z_k \; k = 1, \ldots, NASX
\end{aligned}
\tag{4-24}
$$

where NRSX is the number of radial rings, NTSX is the number of azimuthal sectors (angular segments), and NASX is the number of axial levels. By default, r_0, θ_0, and z_0 are zero. The point (r_i, θ_j, z_k) is a vertex in the cylindrical-coordinate mesh. The system-model elevation at (r_0, θ_0, z_0) is input-specified by SHELV. Figure 4-24 illustrates the mesh construction. Mesh cells are formed as shown in Fig. 4-25 and identified by an axial level number and a (horizontal-plane) cell number. For each axial level, the cell number is determined by first counting the cells azimuthally (y-direction) counter-clockwise (looking in the negative z direction) and then counting radially (x-direction) outward starting with the first azimuthal sector (y) and the innermost ring (x) cell, as shown in Fig. 4-24. Figure 4-25 also shows the relative-face numbering convention that is used in connecting other 1D hydraulic components to a VESSEL-cell face (interface). Note that only three faces per mesh cell are identified because the other three faces are defined by neighboring VESSEL cells.

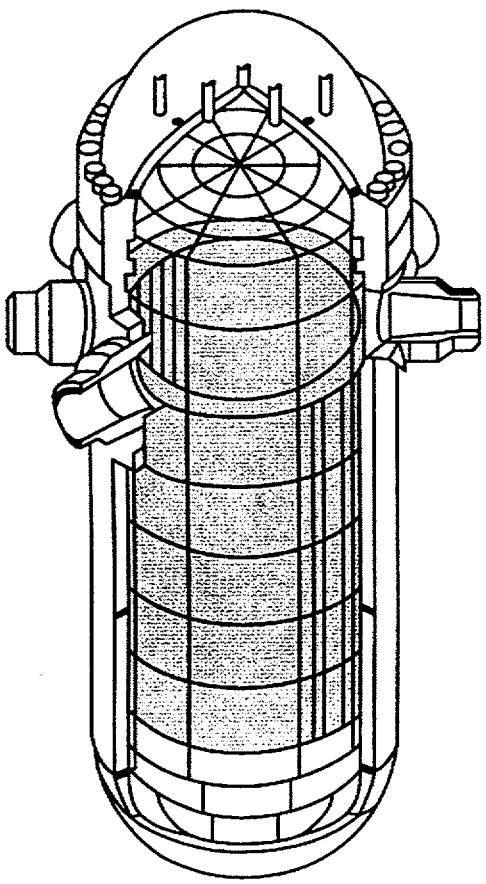

Fig. 4-23. Cell noding diagram for a typical PWR vessel.

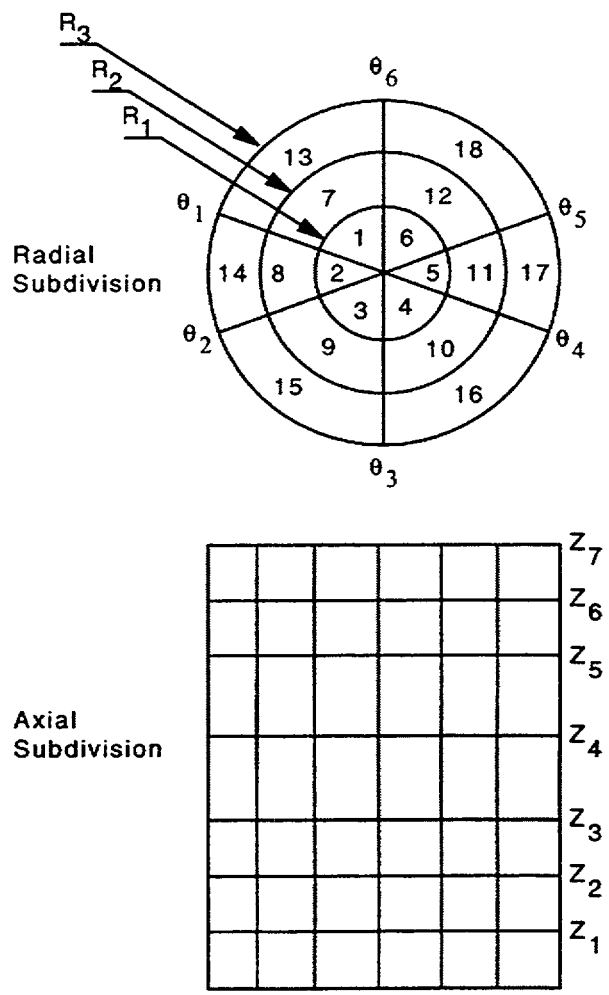

Fig. 4-24. VESSEL geometry: 3D mesh construction with three rings, six azimuthal sectors, and seven axial levels.

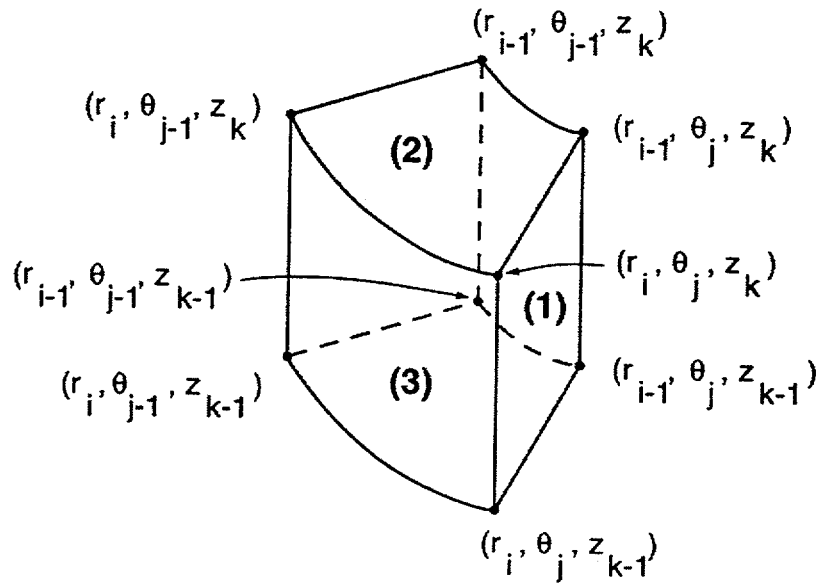

Fig. 4-25. Shown are the vertex corners of a 3D mesh cell and the face numbers on the near-side faces. Faces 1, 2, and 3 are in the θ, z, and r directions, respectively.

Normally, the orientation of the VESSEL component has its z-coordinate axis pointing upward (the gravitational unit vector points in the negative z-coordinate axis direction). The TRAC-M user can specify a general orientation of the VESSEL component by inputting NAMELIST input variable NVGRAV = 1. The gravitational unit vector components GXRC (r or x direction), GYTC (θ or y direction), and GZC (z direction) are input as part of the VESSEL-component data. The gravitational acceleration constant GC is input as well to replace TRAC-M's internal default value of 9.80665 m s^{-2} (32.17405 ft s^{-2}) for the entire hydraulic-system model.

All fluid flow areas (of cell faces) and all fluid volumes (of cells) are dimensioned so that internal structure within the vessel can be modeled by the VESSEL component. Cell flow areas and volumes are computed on the basis of geometric mesh spacings and the cell portion that is fluid according to cell flow-area and volume fractions that are input specified. The fluid flow areas and volumes are used in the fluid-dynamics and heat-transfer calculations.

Flow-area restrictions and the volume occupied by structure within each mesh cell are modeled through the difference between the geometric cell and its fluid portion. For example, the downcomer wall is modeled by setting the appropriate cell-face flow-area fractions to zero. A VESSEL feature is provided to do this automatically in TRAC-M if the upper-axial, lower-axial, and radial downcomer-position parameters IDCU, IDCL, and IDCR are input specified by k, k, and i values [in Eq. (4-24)], respectively, different than zero. NAMELIST input variable IGEOM3 = 1 allows the user to input non-zero flow-area fractions in the downcomer wall that model leakage flow paths while IDCU,

IDCL, and IDCR define the downcomer position so that downcomer and lower-plenum global parameters can be evaluated and written to the graphics file. Flow restrictions at the top and bottom core-support plates require flow-area fractions between zero and one. Figure 4-26 shows the cell faces that have flow-area restrictions to model the downcomer and core support plate. Fuel-bundle assembly spacer grids can be modeled at NSGRID axial locations in the reactor-core region. Their model adjusts the vapor-to-liquid interface heat-transfer coefficient above the quench front (see the TRAC-M Theory Manual) when the reflood model (NAMELIST input variable NEWRFD = 1) is being evaluated (see Section 4.3. for remarks on the additional top-down/bottom-up reflood model that is part of TRAC-M/F77, which also contains the grid spacer model).

Note: Use of the current grid spacer model is not recommended.

Piping connections from other 1D hyraulic components to the VESSEL are made to the faces of VESSEL mesh cells. These VESSEL connections are referred to as source connections. An arbitrary number of source connections per cell face is allowed, and each mesh cell in the VESSEL can have a 1D hydraulic component connected to it.

Input parameters LISRL, LISRC, LISRF, and LJUNS are used to define such a connection. LISRL defines the axial level number, LISRC defines the (horizontal-plane) cell number, and LISRF defines the cell-face number at which the connection is made. If LISRF is positive, the source connection is made to the cell face shown in Fig. 4-25 with the direction of positive flow outward from the cell. If LISRF is negative, the source connection is made on the opposite face in Fig. 4-25 with the direction of positive flow inward to the cell. For example, LISRF = 1 is the azimuthal face at θ_j, LISRF = –1 is the azimuthal face at θ_{j-1}, LISRF = 2 is the axial face at z_k, LISRF = –2 is the axial face at z_{k-1}, LISRF = 3 is the radial face at r_i, and LISRF = –3 is the radial face at r_{i-1}. The parameter LJUNS identifies the junction number of the 1D hydraulic component connected to this cell face. Figure 4-27 shows two VESSEL pipe connections. Note that internal as well as external cell-face connections are allowed.

The flow-area change reversible form loss at a source-connection junction is based on the connecting 1D hydraulic-component cell VOL/DX cell-averaged flow area changing to the VESSEL cell-face flow area times the fluid volume fraction in the cell. Generally, the flow area in the VESSEL that the source-connection fluid-flow experiences is much larger than that of the VESSEL cell's fluid. The flow-area change irreversible form loss at a source-connection junction must be input specified by FRICs (or K factors). TRAC-M does not evaluate an abrupt flow-area change irreversible form loss by setting NFF = 0 at the source connection's 1D hydraulic-component junction. To evaluate both these losses, TRAC-M needs to know the VESSEL's flow area for each source connection's fluid flow. TRAC-M approximates that flow area with the VESSEL cell's fluid flow area for the reversible form loss but does not do the same for the irreversible form loss. This is because normally reversible form losses are evaluated internally by TRAC-M based on the momentum-convection term with flow-area ratios, and irreversible form losses are input specified by FRICs (or K factors).

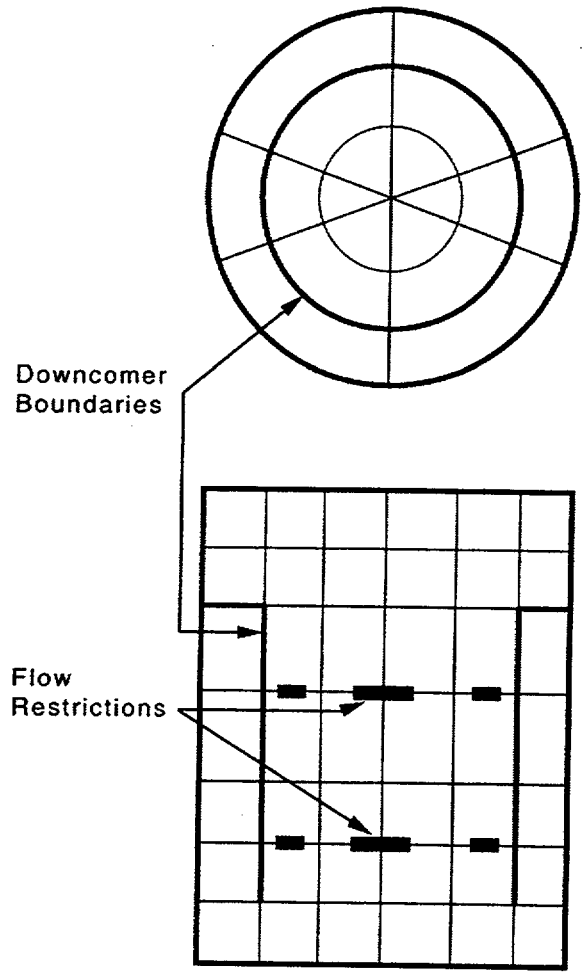

Fig. 4-26. Flow restrictions and downcomer modeling

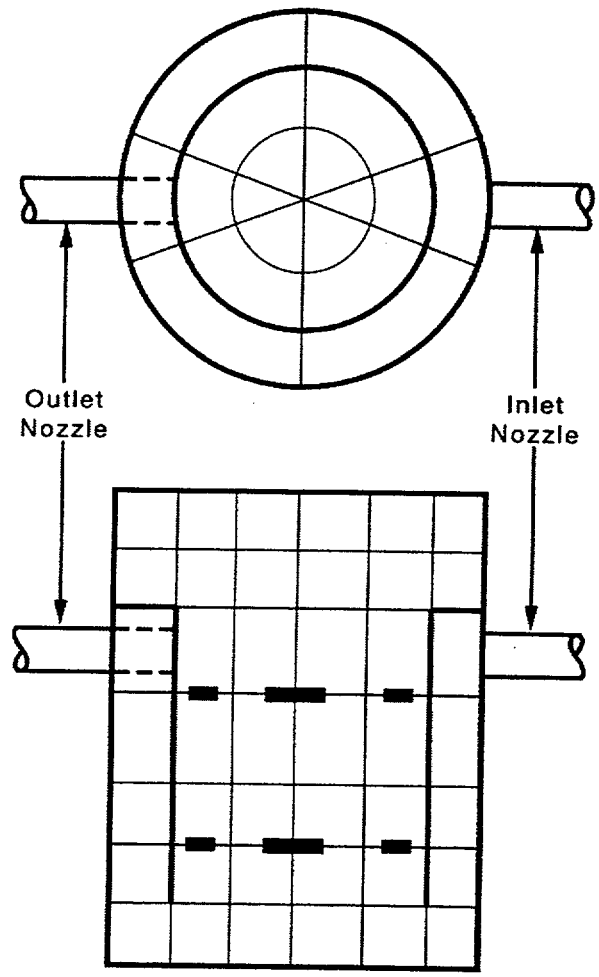

Fig. 4-27. PIPE component connections to the VESSEL

A VESSEL option models the Babcock & Wilcox vent valves that are located in the wall between the upper plenum and downcomer. These vent valves permit flow directly from the upper plenum to the downcomer and out the cold leg for a cold-leg break. They are modeled by the same flow area AVENT in the outer radial face of NVENT cells for the NVENT vent valves. A variable FRIC irreversible form loss is defined to model opening and closing. The vent valves can be modeled by input-specified constant pressure-drop setpoints for each vent valve being open or closed with constant FRIC values for each. A FRIC value is interpolated for pressure drops that are in between. The vent valves also can be modeled by an input-specified table of FRIC irreversible form loss vs pressure drop across the vent valve tabular data. Only one table is input for all vent valves when defined by tabular data.

The reactor-core region in the VESSEL is specified by the upper axial-level, lower axial-level, and outer radial edge positional parameters ICRU, ICRL, and ICRR, respectively, of the cylindrical region. Figure 4-28 shows a reactor-core region example where ICRU = 4, ICRL = 2, and ICRR = 2. Each axial column of mesh cells in the reactor-core region can contain an arbitrary number of fuel rods modeled by a HTSTR component. One average ROD (or SLAB) element represents the average of the ensemble of fuel rods in each axial column of mesh cells. Its HTSTR-component heat-transfer calculation couples directly by convection heat transfer from the fuel-rod surface to the fluid dynamics of the VESSEL component. The thermal analysis of any HTSTR-component supplemental-power ROD (or SLAB) element (at a power different than the average power) does not feed back or couple directly to the fluid-dynamics analysis of the VESSEL component. However, the average fluid condition in the coupled VESSEL mesh cell is used to evaluate the supplemental- as well as average-power ROD (or SLAB) elements.

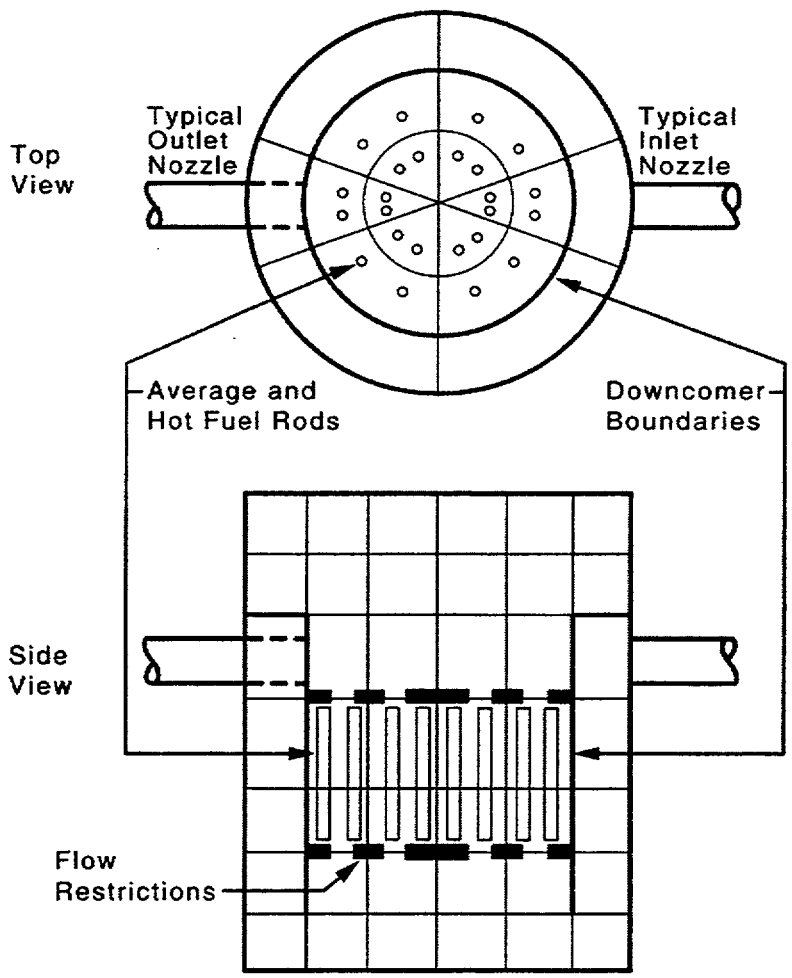

Fig. 4-28. Reactor-core region inside the VESSEL component.

REFERENCES

4-1 E. A. Haytcher, R. G. Steinke, and J.-C. Lin, "Two-Dimensional Power-Distribution Component Action of the TRAC-PF1/MOD2 Heat-Structure Component," Los Alamos National Laboratory report LA-N7-2 (December 1992).

4-2 K. L. Lam, "Implementation of a Radiation Heat-Transfer Model into the TRAC Code," Los Alamos National Laboratory document LA-UR-96-0174 (October 1995).

4-3 V. L. Streeter and E. B. Wylie, *Hydraulic Transients,* (McGraw-Hill Book Company, New York, New York, 1967) pp. 151–160.

4-4 "RELAP/MOD5: A Computer Program for Transient Thermal-Hydraulic Analysis of Nuclear Reactors and Related Systems," Vol. 1, Idaho National Engineering Laboratory report ANCR-NUREG-1335 (September 1976).

4-5 D. J. Olson, "Experimental Data Report for Single- and Two-Phase Steady-State Tests of the 1-1/2-Loop MOD-1 Semiscale System Pump," Aerojet Nuclear Company report ANCR-1150 (May 1974).

4-6 G. G. Loomis, "Intact Loop Pump Performance During the Semiscale Isothermal Test Series," Aerojet Nuclear Company report ANCR-1240 (October 1975).

4-7 D. J. Olson, "Single- and Two-Phase Performance Characteristics of the MOD-1 Semiscale Pump Under Steady State Fluid Conditions," Aerojet Nuclear Company report ANCR-1165 (October 1974).

4-8 D. L. Reeder, "LOFT System and Test Description (5.5-Ft. Nuclear Core 1 LOCES)," EG&G Idaho, Inc. report TREE-1208, NUREG/CR-0247, pp. 161–166 (July 1978).

4-9 "TRAC-BD1 Manual: Extensions to TRAC-BD1/MOD1 (Draft)," Idaho National Engineering Laboratory report EGG-2417, NUREG/CR-4391 (August 1985).

4-10 Y. K. Cheung, V. Parameswaram, and J. C. Shaug, "BWR Refill-Reflood Program, Task 4.7-Model Development, TRAC-BWR Component Models," General Electric Company report NUREG/CR-2574 (April 1983).

5.0. GENERAL GUIDELINES

5.1. TRAC-M Use—An Overview

In this section, we will provide an overview of TRAC-M usage. We encourage the user to read this brief introductory material to gain a perspective on the total effort required to prepare a plant model and to use TRAC-M to simulate the desired transient. We have illustrated the processes and work flow associated with TRAC-M usage in Fig. 5-1. We believe that each of these steps is important to the successful application of TRAC-M. We have assumed that an assignment to perform an analysis of a transient in a specific nuclear power plant has been received and that a decision has been made to use TRAC-M to simulate the transient performance of the plant. We have further assumed that this plant has not been modeled previously; therefore, that it will be necessary to collect the information needed to model the specific plant and prepare a TRAC-M input-data model.

Detailed discussion on preparation of input models for TRAC-M is given in Sections 6.0., 7.0., and 8.0., and in Appendices E, F, I, and J. Analysis of the code's results is similarly described in detail in Section 8.0., and in Appendices G, H, K, and L

5.1.1. Database Preparation

An accurate assessment of the plant transient performance can be expected only if the model accurately depicts the plant features most important to the transient being examined. Therefore, it will be necessary to collect information that provides a complete description of the plant, organize the information, and collect it into a database. As used within the TRAC-M/F90 User's Manual, the term "database" is defined to be an organized collection of the specific data from which the TRAC-M input-data model is to be prepared. Each item in the database is assigned a unique identifier; the numbers can be assigned in a serial fashion. We recommend that individual items in the database not be too large. For example, including the Final Safety Analysis Report (FSAR) as a single item in the database is not appropriate. It is better, we feel, is to assign a unique identifier to each table, drawing, or section that is used specifically in the model development. This allows you to assemble a reasonably compact database file. A more detailed description of database definition, preparation, and maintenance is provided in Section 5.2. In that section we have provided Table 5-1, which details the specific items included in the database for a Westinghouse (W) three-loop plant.

5.1.2. Input-Data Model Preparation

Once the database is prepared, the user can develop an input-data model. A primary objective of the TRAC-M/F90 User's Manual is to help the user to complete this activity by providing both general and specific guidelines and examples (as in Section 7.0.). In addition, we have provided a bibliography in Appendix A that identifies documents that describe several different models of plants and experimental facilities. Although these documents were not originally prepared as TRAC-M user aids, they do provide insights into the current modeling philosophy at Los Alamos and other facilities where TRAC-M is used.

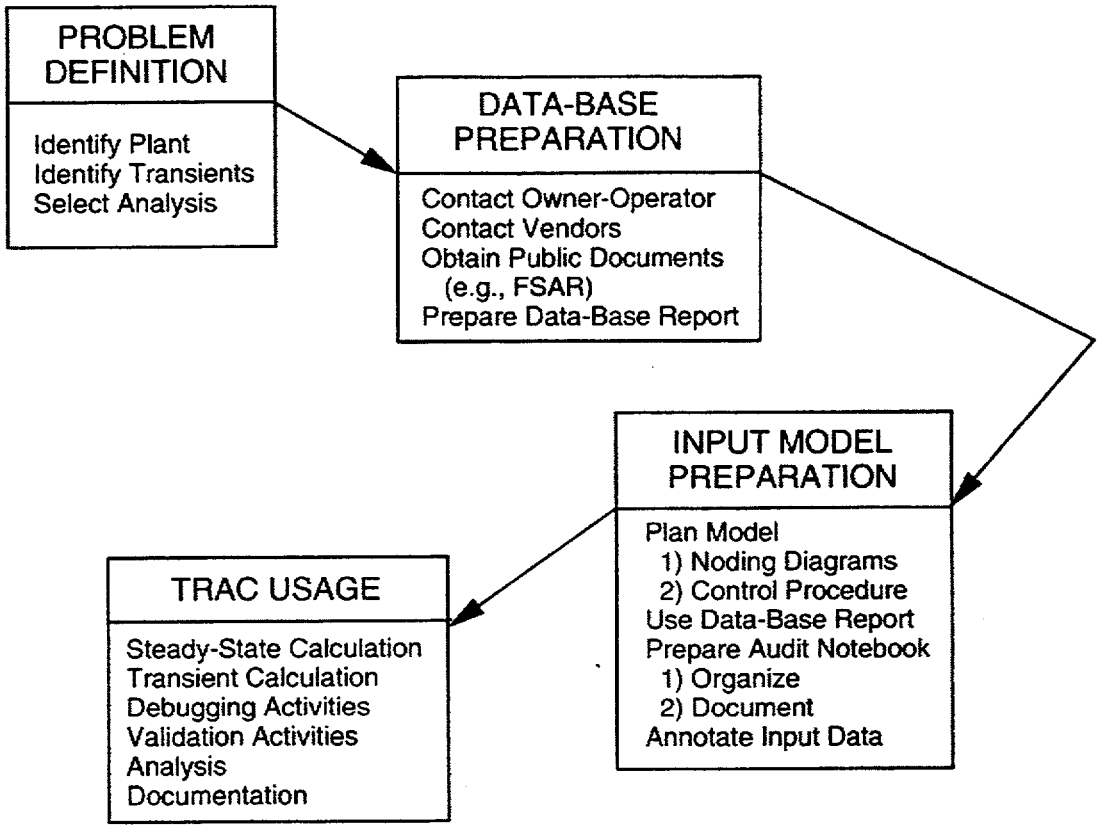

Fig. 5-1. Problem solving with the TRAC-M code.

An important feature of input-data model preparation is the organization of an audit notebook. It is difficult to overemphasize the importance of this document. The term "document" is used to convey that the audit notebook is to be considered an end product of the input-data model preparation activity. The notebook must be well organized and legible (it is usually handwritten). There are several significant objectives in keeping the audit notebook. First, the notebook documents the modeling decisions made by the model developer. Second, those input parameters developed from a separate calculation process are recorded. Third, the bases for the input-data values are identified. Often, the basis is information found in the database. By making clear reference to the information found in the database, traceability is provided between the numbers in the input-data model and the source data. If there are no specific data for a given input-data value, that fact is recorded in the audit document. Because there are so many individual numbers that make up a full-plant input-data model, it is difficult to prepare an error-free model. However, when potential errors are discovered, the worth of the audit notebook becomes evident because the bases for the current input-data values are displayed. We have found this to be the primary value of the audit notebook. There is also a secondary value that should be mentioned. The very process of structuring the model-development effort to provide an audit notebook seems to reduce the number of errors in model development.

Documentation of the input-data model needs not be restricted to notebooks. We have found it useful also to provide annotation within the input-data file. Usually there are two types of annotation. The first is placed at the start of the input-data file as: (1) title comments that identify the facility being modeled, (2) information that will uniquely identify this specific input-data file, and (3) a reference to the audit notebook and database documents. The second type of annotation is distributed throughout the input-data file and is provided to help locate and identify data within the input-data file. This annotation would identify the data values for a given component; for example, cell lengths, cell fluid volumes, fluid flow areas, flow-channel hydraulic diameters, etc. Examples of input-data annotation are presented in Section 5.3. and Appendices E and F.

5.1.3. Work Flow

Once the input-data file is prepared, the user is ready to begin using TRAC-M. In Fig. 5-2, we have provided a diagram of the work flow to illustrate the activities usually involved in a complete analysis effort using TRAC-M. The diagram identifies the specific file names that are required for TRAC-M input (for clarity we give file names in upper case; on case-sensitive systems lower case is used). These naming conventions must be followed when using TRAC-M. Again, we assume the fullest-possible work flow: the evaluation of a steady-state calculation, the evaluation of a subsequent transient calculation requiring multiple restart calculations, and the preparation of TRAC-M results in graphical form. A TRAC-M file named TRACIN is always required to provide input data to TRAC-M. For the initial steady-state calculation, the TRACIN file is the plant or facility input-data model. The TRAC-M output results are contained in five files named TRCMSG, TRCOUT, TRCXTV (in TRAC-M/F77, the information in TRCXTV is contained in files XTVGR.T and XTVGR.B), INLAB, and TRCDMP. The first two files, TRCMSG and TRCOUT, are text files and may be reviewed with text editors. File INLAB is an optional annotated echo of TRACIN. The remaining output files, TRCXTV and TRCDMP, are binary files and cannot be reviewed with a text editor (certain header information in TRCXTV is text). File TRCOUT contains text-format results of a calculation in the form of "large edits", which are written at user-specified intervals (via "time-domain" input in file TRACIN, as described in Section 6.0.) in a run's problem time. Appendix H contains extensive examples of the type of information that is written to file TRCOUT. File TRCMSG is also a text- format file that contains information mostly of a diagnostic nature. The level of detail that is contained in TRCMSG can be controlled in part by user input (via NAMELIST options in file TRACIN, as described in Section 6.0.). The analysis of TRAC's results is done via the graphics binary-format file TRCXTV, which is used as input to a separate post-processing software such as XMGR. In the TRAC-M/F77 code, the graphics file XTVGR.B and XTVGR.T are input to the graphics software XTV (Ref. 4-1). XTV can be used to generate plots or to generate graphics data files that can be used by XMGR. Edit intervals to file TRCXTV are specified via the time-domain input in file TRACIN. A complete list of the data written to file TRCXTV is given in Appendix K. File TRCDMP is also written at user-specified intervals as a run proceeds; it contains data-dumps that can be used to initialize subsequent restart runs, as described later in this Section. File INLAB is provided as a user-convenience feature; it consists of an echo of the input, arranged in standard TRAC-format with the data identified with comments. It is written under control of an optional NAMELIST flag. (There is a sixth output file that is called TRCDIF, which is only used by code developers

when null-testing of code changes is being done.) For a subsequent steady-state calculation (assuming the desired steady state was not attained in the first calculation) or a transient calculation, the TRCDMP file is renamed TRCRST. The renamed TRCRST file and a TRACIN file are always required to provide input data for any calculation other than the first in a sequence. Once an acceptable steady-state solution is obtained, a transient calculation can be initiated from the last steady-state calculation TRCDMP file renamed TRCRST and a TRACIN file. We emphasize that even though the input-data file for each initial and restart calculation is named TRACIN, each TRACIN file may be different. For example, the first steady-state calculation input-data TRACIN file contains the full-plant model description. Usually only one steady-state calculation is needed to determine a converged steady-state solution. The first transient calculation TRACIN input-data file need not repeat the plant-model description. That information, along with the steady-state thermal-hydraulic solution, is obtained from the renamed TRCRST file from the steady-state calculation. The TRACIN file for the transient calculation contains changes that need to be made to the steady-state-calculation plant model to convert it to a transient-calculation plant model. This can include a description of the transient trip actions and control-system behavior and the modeling of the transient initiator, such as a break or an abnormal component action. When a point in time is reached in the transient calculation when no further modeling changes are required, the same minimal input-data TRACIN file can be used for subsequent transient calculations until the end of the transient. For each restarted calculation, the TRCDMP file from the previous calculation, renamed TRCRST, is required to restart the next calculation. This describes the most typical use of TRAC-M. A steady state run can also be initialized in part by TRCRST, and a transient does not have to have a TRCRST.

Note: Separation of Input Processing. An important part of current TRAC-M/F90 development (post Version 3.0) involves splitting the current code's logic into separate input and computational "engines". These will be called "TracInp" and "TracCmp", respectively. Figure 5-2a shows the logic flow in the separated code. For both steady state and transient runs file TRACIN and (optionally) file TRCRST will be given to the input engine TracInp, which will produce a <u>new</u> binary file called TRCDMP, which (renamed TRCRST) will be the <u>only</u> input to the computational engine TracCmp.

5.1.4. I/O in SI or English Units

TRAC-M provides the convenient feature of allowing the user to specify SI or English units for the data that are input to and output from TRAC-M. NAMELIST-input variables IOGRF, IOINP, IOLAB, and IOOUT define the data-value SI or English units of the graphics file TRCXTV; input-data file TRACIN; echoed and labeled input-data file LABIN; and output files TRCOUT, TRCMSG, and the interactive terminal, respectively. A value of 0 selects SI units (default), and a value of 1 selects English units. The TRAC-M user indicates (with these input-data parameters) the units of values read from or written to each of these four I/O areas. The user also indicates with NAMELIST-input variable IUNOUT if units symbols (such as m or ft, kg or lbm, Pa or psia, etc.), along their parameter values, are to be output to files TRCOUT, TRCMSG, and the interactive terminal. A value of 0 selects no units symbols, and a value of 1 selects units symbols (default) to be output.

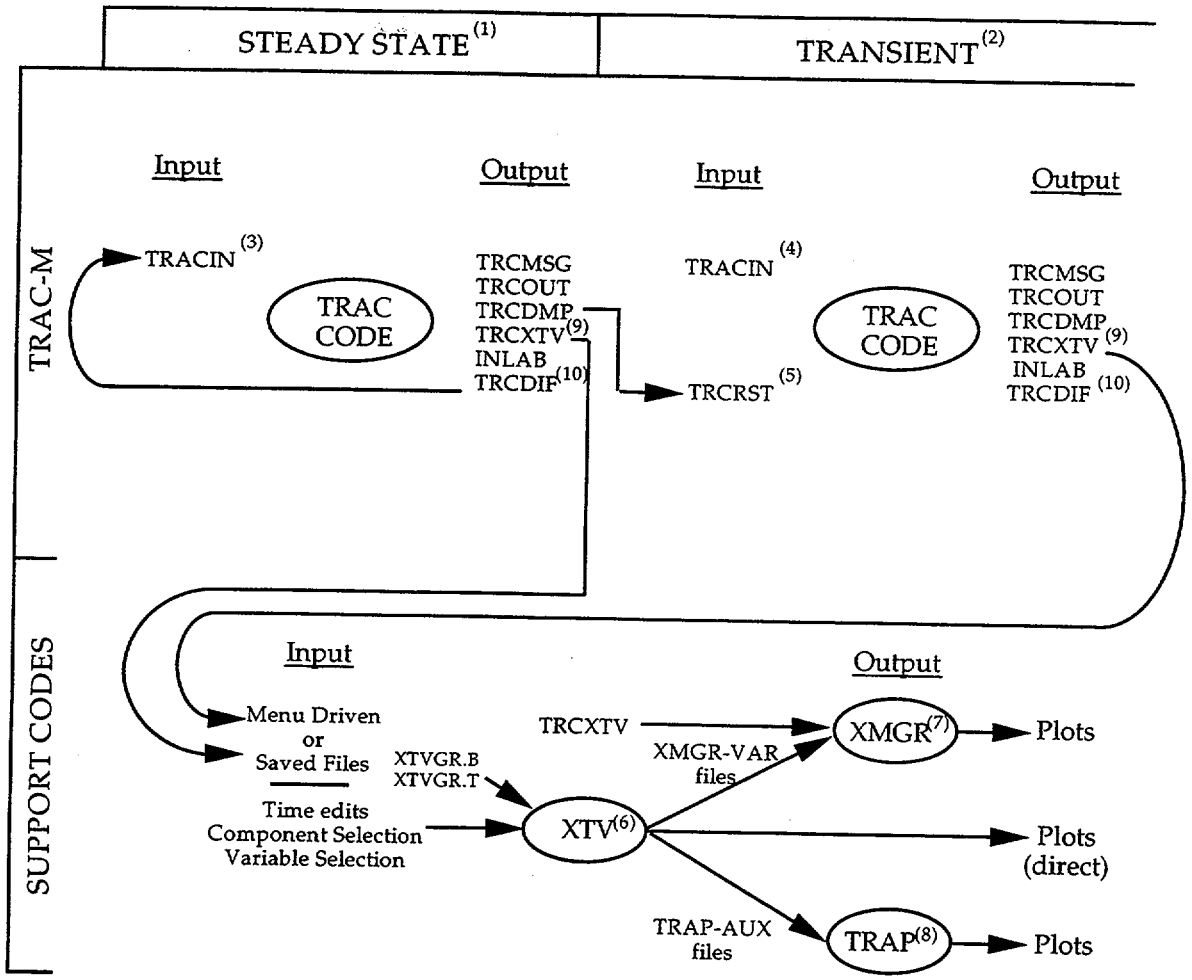

NOTES

1. Usually requires one calculation.
2. Usually requires a series of calculations of which only one is shown.
3. Input-data file contains the full-plant, steady-state description.
4. A condensed version of the steady-state input-data file; all component descriptions are removed except those modified or added to initiate the transient calculation (e.g., breaks), and the possible additon of modified or new control-procedure parameters.
5. Identical to the TRCDMP file from the previous calculation , except the file is renamed to satisfy the TRAC naming convention.
6. X-Windows based Graphical User Interface for reviewing results of TRAC calculations. Used by TRAC-M/F77 code.
7. X-Motif based graphics post processor. Used by TRAC-M/F90 code.
8. Original postprocessor routine for plotting TRAC graphics, expected to be replaced by XTV and XMGR.
9. File TRCXTV is written by TRAC-M/F90. In TRAC-M/F77, the information in TRCXTV is written to two files named XTVGR.T and XTVGR.B.
10. File TRCDIF contains diagnostic information that is used only by code developers (for null testing).

Fig. 5-2. Work flow for TRAC-M and support codes.

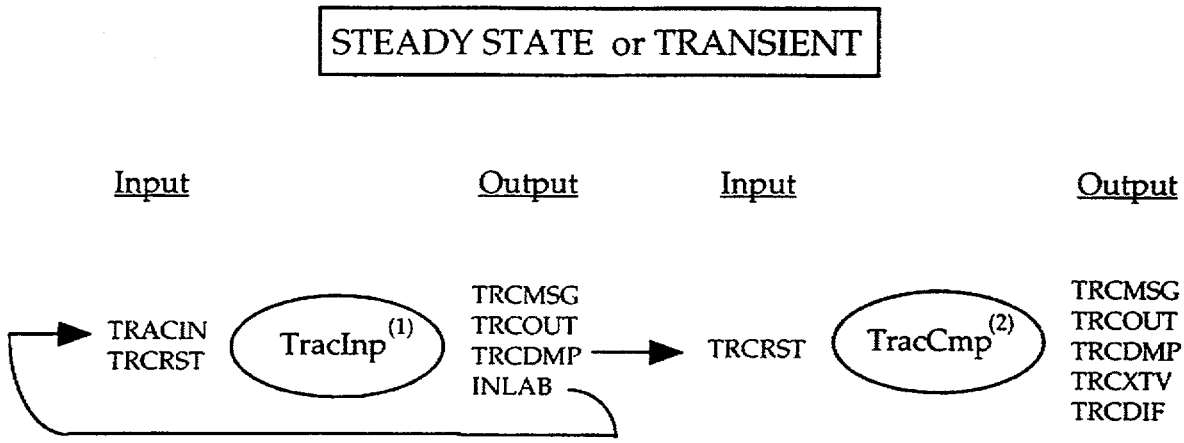

NOTES

1. Input Engine.
2. Computational Engine.

Fig. 5-2a. Future Separation of Input Processing.

The units of real-valued control-block and trip-signal-expression parameters will need to be defined by the user through input data. The units of these parameters are unknown to TRAC-M because the control procedure they are in is created by the TRAC-M user and the user needs to define the units of these parameters in that procedure. This information doesn't have to be input if IOGRF, IOINP, IOLAB, and IOOUT are all 0 for SI units; however, those parameters with unknown units will not be converted from SI units and their units symbols will be output as '*'. The defining form and units of all other real-valued parameters in TRAC-M are known and defined internally in TRAC-M so that TRAC-M can determine their units values and symbols. While input and output may be in English units, all real-valued parameters internal to TRAC-M are in SI units. This should have no effect on TRAC-M users because users only interact with TRAC-M through its input and output data. Code developers who program, test, and debug coding in TRAC-M must work in SI parameter units in that environment.

5.2. Database

Simply stated, your input-data model can only be as good as the data from which it is prepared. If you need to analyze a given nuclear power plant or thermal-hydraulic experimental facility, then you will seek to obtain a detailed description of the facility and how it is operated. If all the desired data are not available, judgment must be used in developing your model. Your confidence in a particular model is closely related to the availability of required data. At the Los Alamos National Laboratory, a number of plant or facility models have been prepared. Nuclear power plants modeled include Zion-1, H. B. Robinson-2, R. E. Ginna, and AP-600, which are Westinghouse four-, three-, two-, and two-by-four-loop designs, respectively; Oconee-1, Three Mile Island-1 and -2, and

Bellefonte, which are Babcock & Wilcox lowered- and raised-loop designs; Calvert Cliffs-1, which is a Combustion-Engineering design, and the K and L production reactors at Savannah River. Experimental facilities modeled include the LOFT, Semiscale, Primarkreislauf (PKL), Multiple-loop Integral System Test (MIST), Rig Of Safety Assessment IV (ROSA IV), Cylindrical Core Test Facility (CCTF), Slab Core Test Facility (SCTF), Bankoff CCFL test, and Lehigh rod-bundle test. Our recommendations for database preparation are based on our experience in modeling these and other plants and facilities.

5.2.1. Data Requirements

In general, the database that is required can be assigned to the following seven categories:

1. Thermal-hydraulic geometry data,
2. One-dimensional heat-transfer structural data,
3. Control procedures,
4. Initial and boundary conditions,
5. Model-selection parameters,
6. Reactor description (VESSEL), and
7. HTSTR component.

These are the same seven categories that are discussed in Section 7.0., where we provide detailed guidelines for using a database to model a facility. Data needs in each of these seven categories are discussed briefly in the following sections.

5.2.1.1. Thermal-hydraulic geometric data. In TRAC-M, all hydraulic flow paths are modeled in 1D Cartesian geometry with the exception of the VESSEL component, which provides either 3-, 2-, or 1D modeling in Cartesian or cylindrical geometry. Let us consider first the mesh cells (flow-path elements) that are used to model the 1D hydraulic components, i.e., PIPEs, PLENUMs, PRIZERs, PUMPs, SEPDs, TEEs, TURBs, and VALVEs. The thermal-hydraulic geometric data required for each 1D hydraulic flow-path cell and interface between mesh cells are:

1. cell length,
2. cell fluid volume,
3. interface fluid flow area,
4. elevation at the cell center or the change in elevation from cell center to cell center,
5. interface hydraulic diameter, and
6. interface additive loss coefficients (or K factors).

A natural question at this point might be "how does one decide on how many cells should be used to model a 1D hydraulic component and where do I locate the cell interfaces"? General guidance about noding decisions will be provided in Section 5.3. As we describe database requirements, the important point to remember is that for each cell, the six items of thermal-hydraulic data listed above must be provided. Therefore, the data-collection process must provide data of sufficient geometric detail to support the noding decisions you will make later as you prepare your model.

As you might expect, the database needs for modeling a reactor vessel in three dimensions are both more extensive than those for modeling 1D hydraulic components and are more challenging to process because of the complex geometry. In addition, the reactor's internal structure also must be defined. For these reasons, we have chosen to treat most of the unique 3D hydraulic VESSEL component features in a separate section (Sections 5.2.1.6. and 7.6.).

5.2.1.2. 1D heat-transfer structural data. Conduction heat transfer in the cylindrical wall and convection heat transfer from the cylindrical-wall surfaces of a PIPE, PRIZER, PUMP, SEPD, TEE, and VALVE 1D hydraulic component may be modeled as part of the hydraulic component (by input-specifying NODES > 0) or by a HTSTR component. If wall heat transfer is of primary importance, the HTSTR component should be used because it has many modeling features and can perform a 2D conduction heat-transfer calculation with correlation-defined convection heat-transfer coefficients on both the inner and outer surfaces of the wall. The calculation of wall heat transfer as a part of the 1D hydraulic component models is much simpler. In this case, the only required geometry data are the inner radius, wall thickness, and the wall-material type. In some cases, wall heat-transfer coupling to the hydraulic fluid has little effect on the thermal-hydraulic behavior of a rapid transient and can be eliminated from the calculational model entirely (by specifying NODES = 0 or by not modeling wall heat transfer with a HTSTR component).

5.2.1.3. Control procedures. There are four basic building blocks in the TRAC-M control procedure: signal variables, control blocks, trips, and component-action tables that are described in Section 3.0. Signal variables are modeled-system parameters that are selected by the user for later use in the control procedure to define an input signal to a control block, a trip signal, or the independent or dependent variable of a component-action table. Examples of modeled-system parameters that may be used as signal variables are problem time, cell pressure or phasic temperature, interface phasic velocity or mass flow, pump-impeller rotational speed, and dissolved-solute (boron) concentrations. Control blocks are mathematical functions that operate on signal-variable and/or control-block input signal/s to determine their functions output signal. A network of coupled control blocks can be specified to define a control system that determines a trip signal or the independent or dependent variable of a component-action table. Examples of control-block functions are arithmetic functions, trigonometric functions, derivative, integrators, logical boolean operators, Laplace transforms, tabular data, and PI/PID controllers.

Trips are ON/OFF switches for initiating/terminating some component action that is input specified by the modeler. That means that you must know what hardware action you want to occur and what circumstances will lead to that action being taken. TRAC-M can simulate a spectrum of trip-controlled actions from the very simple to the more complex. The closing of a valve at a prespecified problem time is an example of a simple trip controlling a VALVE component action. The information needed to define this trip is an ID of the VALVE to be controlled by the trip and the problem time that the closure action is to begin (usually problem time is measured from the time the steady-state or transient calculation started initially). In this example, problem time would be defined

by a signal variable that defines the trip signal. When the prespecified problem time is reached, the trip is set ON and its controlled VALVE component-action table is evaluated to close the valve. A complex trip controlling a VALVE component action can be prepared that includes both valve opening and closing based on trip control. The trip signal can be a signal variable defining some thermal-hydraulic status of the plant model, a control-block output signal from a simulated network control procedure, or the value of a preprogrammed expression using the set status of other trips. For complex trip-signal logic, one must again know the component action to be changed, what component response is required following the controlling trip being set ON, and what information is required to decide whether or not the component action should occur. Generally, transient calculations have simple trip-controlled component actions. However, as plant models more closely simulate the actual plant behavior and its automatic control features, trip-control modeling will become more complex.

The major point to be emphasized is that the control-system modeling decisions you make define your data requirements. If you are interested only in LBLOCAs, then your control-system modeling will probably be minimal. Operational transients often require extensive control-system models. We hope that this brief section has helped you understand that you can successfully model a control system only to the extent that you know what it does, its response characteristics, and the information it processes in deciding its action.

The objective of defining signal variables, control blocks, and trips is to produce an adjustment in a component hardware action. Within the component specification, this is accomplished with a component-action table. The component-action table defines the component hardware action as a tabular function of an independent variable. Without trip control, the component-action table is evaluated at the beginning of each timestep to determine the hardware-action value for the timestep. With trip control, the trip set status must be ON (ONforward or ONreverse) for its component-action table to be evaluated for the timestep. When the controlling trip is OFF, the component action's initial value (when the trip has never been ON), last table-evaluated value (when the trip was last ON), or an input-specified OFF value (when the trip is OFF after being ON) is the hardware-action value for the timestep.

5.2.1.4. Initial and boundary conditions. In general, initial-condition data are the easiest to provide. This is because transient calculations are usually initiated from a steady-state solution that is evaluated by TRAC-M. The initial condition for a steady-state calculation only requires an estimate of the thermal-hydraulic steady-state solution be input specified as part of the component data. That estimate can be good or bad. A bad estimate, which is easiest to input, requires more calculative iterations by the steady-state calculation to converge to the steady-state solution. In a bad estimate, for example, constant pressures, gas volume fractions, and phasic temperatures and zero-flow phasic velocities generally are input specified. In a good estimate, spatial distributions of these parameters (that approximately conserve mass and energy in each cell) need to be input. A hydraulic-path steady-state initialization procedure is provided in TRAC-M to evaluate such spatial distribution estimates during the initialization phase. It is based on

input specifying the known or estimated thermal-hydraulic flow condition at a location in each 1D flow-channel hydraulic path.

A steady-state calculation evaluates the steady-state solution pressure, gas-volume-fraction, phasic-temperature, and phasic-velocity distributions throughout the system model. If the thermal-hydraulic modeling is correct and if constrained steady-state controllers are provided to adjust uncertain hardware actions to give known or desired steady-state thermal-hydraulic conditions, an accurate steady-state solution (and hence initial condition for the transient calculation) can be obtained. Again, a good estimate is not required for the input thermal-hydraulic condition if a steady-state solution is to be evaluated by TRAC-M. The hydraulic-path steady-state initialization procedure can be used to initialize a good estimate and save calculative effort. One exception is the input specification of the gas volume fraction distribution. Because the gas volume fraction distribution sets the initial liquid inventoy (for example, on the steam-generator secondary side), care should be taken when input specifying this parameter.

Boundary conditions may be specified in any of three ways using the BREAK and FILL components. First, boundary conditions that have prespecified values during the course of a transient are specified explicitly in TRAC-M. The following types of boundary conditions can be imposed: constant or variable pressure, mixture velocity, or mixture mass flow with a constant or variable fluid state (gas volume fraction, phasic temperatures, noncondensable-gas pressure, and dissolved-solute concentration) for inflow. Again, the modeler must know what boundary condition is desired as a function of time or other appropriate independent variable. Second, boundary conditions that depend on the thermal-hydraulic solution may be specified implicitly through control procedures that apply all the time or may be trip activated during the course of a transient if user-defined conditions are satisfied. Third, a combination of the first and second approaches may be used.

5.2.1.5. Model-selection parameters. Information about model-selection parameters can be obtained from Section 6.0. and Section 7.5. Guidelines in Section 7.5. will recommend values for the critical heat-flux and friction-factor correlation options.

5.2.1.6. Reactor description (VESSEL). First we need to deal with vessel geometric data that are required. After deciding how to nodalize the VESSEL component [how many axial segments or levels (z-direction cells), radial segments or rings (x-direction cells), and azimuthal segments or sectors (y-direction cells)], you will need to identify the location of the lower plenum, reactor core, upper plenum, upper head, and downcomer within the reactor vessel. You also will need to identify the hot- and cold-leg entry points to the vessel and the location of vent valves and guide tubes, if they exist. Again, the amount of data required is related to the noding decisions that you make. For each cell that you define within the 3D VESSEL component, you will need to provide the following geometrical data:

1. the cell fluid volume fraction; that is, the fraction of the geometric volume of the cell occupied by fluid (the remaining volume is occupied by structure);

2. the fraction of each cell face [azimuthal (θ or y), axial (z), and radial (r or x)] through which fluid may flow;
3. the hydraulic diameter at each cell face; and
4. the additive-friction-loss coefficients at each cell face for liquid and gas.

5.2.1.7. HTSTR component. The geometry and material must be determined for all fuel rods, control rods, and structure (piping and support hardware) in the modeled plant. The user should determine whether reflood is expected to occur in the core region of the reactor vessel so that an informed decision can be made to model this phenomenon. Data also must be provided to define the neutronic characteristics of the reactor core. These include data about the axial, radial, and azimuthal power profiles; type of reactor-kinetics model needed; power history; and decay-heat characteristics. Many items of data are required to define HTSTR components, particularly when they are power generating, such as for fuel rods. Detailed modeling guidelines are provided in Section 7.7.

5.2.2. Data Sources

There are several sources of facility data that can provide the resource material from which a database can be developed. The best source is the facility owner. For nuclear power plants, this is the owner-operator. The owner-operator is usually the single organization that collects all plant-related data. Experimental facilities can be owned by either governmental agencies, vendors, utility-sponsored research organizations, or owner's groups. In each case, the organization that owns and operates the facility is the best source of the information needed to construct a database. Companies that have manufactured major parts of the plant or experimental facility also are good sources of data. For nuclear power plants, a prime source of information is the reactor vendor.

The FSAR is an excellent, and readily available, source of data for nuclear power plants. The FSAR is a public document that contains both overall plant descriptions and specific plant-design data. However, the data are not sufficiently complete, particularly with regard to secondary systems, to permit complete plant modeling using only this data source. Information about the secondary systems of nuclear power plants must usually be obtained from the owner-operator.

To illustrate the types and sources of materials that have been compiled for a nuclear power plant, we have provided a descriptive tabulation for a Westinghouse three-loop nuclear power plant in Table 5-1. This database is adequate for detailed modeling of both the primary and secondary coolant-system features of the plant. We have also provided in Table 5-2 a tabulation of the FSAR information we used in preparing our model of the Zion-1 plant and thereby provide a more detailed listing of the FSAR information that is useful for model development.

In some cases there may be data that are not readily available. The user may have to make some approximations based on engineering judgment to be able to completely specify the input-data model. In such cases, a sensitivity analysis should be performed to determine the effect of varying the estimated parameters through a range of possible values.

5.2.3. Documentation

Once you have compiled your database, it is important to organize and document the information. We have found it helpful to assign each item in the database (for example: each drawing, table, or figure) a unique identifier number. We have not used a complex system; we have just numbered the items serially as we obtained them. We have tried to maintain the first copy of each item in "as received" condition by making working copies that the modeler can use as desired. The originals are stored in physical volumes where they can be conveniently located.

The system just described has two objectives. The first is to provide a way to identify items in the database that are used in developing the plant model. The second is to provide a traceable path linking the entries in the TRAC-M input-data model back to the original database. Traceability is ensured by creating a document called the audit notebook. The audit notebook documents the development of the model; usually it is handwritten, but it must be well organized and legible. Information obtained from the database is cited by the reference number assigned in the database.

5.3. Input-Data Preparation Guidelines

Now that you have compiled a database and are ready to prepare your TRAC-M input-data model, you must begin to make decisions about how to model the plant or facility to be studied. In this section, we provide general guidelines to help you get started in the modeling process. The guidelines are illustrated by a TRAC-M model of a Westinghouse three-loop plant. The complete input deck for that model, with detailed explanatory annotations, is given in Appendix E. More detailed modeling guidelines will be provided in Section 7.0. To be successful in preparing an input-data model, you must be (1) knowledgeable about the plant or facility and (2) knowledgeable about how to organize that information into a TRAC-M input-data model; this suggests that you will have reviewed the entire TRAC-M/F90 User's Manual before beginning to develop a plant model. Your efforts in compiling a database should provide you with the required knowledge in the first area. The guidelines in this section and in Sections 6.0., 7.0., and 8.0. should prepare you for success in the second area.

TABLE 5-1
W THREE-LOOP PLANT DATABASE FILE

DB No.	Description	Sender	Date	Volume
1	Training notes by plant personnel from plant visit (date)	Utility	Date 1	I
2	Steam-dump-control notes from plant visit	Utility	Date 2	I
3	Utility letter on homogeneous number-density calculations for fuel-cycle calculations.	NRC	Date 4	Filed separately
4	Updated FSAR	NRC	Date 4	Filed separately
5	P&IDs and Logic Diagrams:	Utility	Date 5	Filed separately

Number	Sheets	Title
P&IDs	1	Legend
	3	Main, Extraction, and Auxiliary Steam System
	3	Feed and Condensate
	4	Service and Cooling Water
	3	Fire and Makeup Water System
	3	Emergency Diesel Generator
	3	Auxiliary Steam System
	2	Blowdown System
	3	Instrument and Service Air
	4	Penetration Pressurization System
	1	Isol. Valve Seal Water
	2	Heating, ventilating, and air conditioning (HVAC)
	3	Component Cooling System
	1	Sample System
	1	Chemical and volume control system (CVCS)

DB No.	Description	Sender	Date	Volume

Number	Sheets	Title
	1	Nuclear Instrumentation System
	1	RHRS
	1	Nuclear Instrumentation System

TABLE 5-1 (cont)
W THREE-LOOP PLANT DATABASE FILE

DB No.	Description	Sender	Date	Volume

[

Number	Sheets	Title
	1	Nuclear Instrumentation System
	4	Liquid Waste Disposal
	2	Gaseous Waste Disposal
	1	Chemical Fuel System
	1	Postaccident Sampling System
Logic Diagrams	1	(all diagrams)

6	Utility letter dated x/x/xx documenting information transmitted. Also enclo plant information on FW heater 4 and Q & A on steam generator (SG) and Vessel	Utility	Date 6	1
7	System Sescriptions	NRC	Date 7	I&II

SD No.	Revision	System	
1	9	Reactor-coolant system	1
2	7	Safety injection	1
3	3	Residual heat removal	1
4	7	Service water	I
6	4	Reactor safeguards	I
7	2	Rod control system	I
11	7	Reactor protection	I
13	3	Component cooling	I
16	25	Electrical (including Appendix A)	I
17	6	Instrument and station air	II
18	0	Nitrogen and hydrogen systems	II
20	7	SG blowdown	II
21	3	Chemical and volume control system	II
25	4	Main steam	II
26	3	Condensate	II
27	5	Feedwater	II
28	3	Heater vents and drains	II
33	2	Turbine controls	II

SD No.	Revision	System	
8	Precautions,	NRC	8

TABLE 5-1 (cont)
W THREE-LOOP PLANT DATABASE FILE

PLS No.	Revision	System
1	20	Reactor control and protection
2	7	Reactor-coolant system
3	7	Chemical and volume control system
4	4	Auxiliary coolant system
6	6	Nuclear instrumentation system
7	4	Safety-injection system
9	2	Electrical system
10	1	Instrument and station air system
11	3	Heating, ventilating, and air conditioning systems
12	4	Isolation valve seal water system
13	5	Condensate and feedwater system
14	4	Main, reheat, and dump steam system
15	5	Auxiliary-feedwater system
16	1	Auxiliary-steam system
17	2	Primary water and demineralizer water makeup system
18	2	Service water system

DB No.	Description	Sender	Date	Volume
9	Plant Isometric Sketches 1. SG blowdown system 2. Chemical and volume control system 3. Primary coolant system 4. Feedwater system 5. Main steam system 6. Auxiliary feed steam system 7. Safety-injection system 8. Residual heat removal system	NRC	Date 9	III
10	Reactor pressure vessel manual (parts)	NRC	Date 10	III
11	Pressurizer manual (parts)	NRC	Date 10	III
12	Net unit heat rates report	NRC	Date 10	III
13	Revised sketch of instrument and station air from EDS Nuclear work	NRC	Date 10	III
14	New condenser data and curves	NRC	Date 10	III

TABLE 5-1 (cont)
W THREE-LOOP PLANT DATABASE FILE

DB No.	Description	Sender	Date	Volume
15	Moisture separator reheater data	NRC	Date 10	III
16	Feedwater heater data on the original heaters 1, 2, and 5, and on the new feedwater heaters 3 and 6	NRC	Date 10	III
17	Pump curves for: a. A&B condensate pumps b. A&B heater-drain-tank pumps c. A&B feedwater pumps	NRC	Date 10	III
18	Drawing xxx xxxx on the reactor vessel	NRC	Date 10	III
19	Telecon listing feedwater heaters MSR replacement information	NRC	Date 10	III
20	Flux map data from fuel cycle listing radial and axial power distributions	NRC	Date 10	III
21	Missing pages of XX-1 and revised pages of XX-7	ORNL	Date 11	III
22	Telecon info on vessel volumes, upper-head flow, ΔPs, and reactivity insertion rate	ORNL	Date 11	III
23	WCAP-xxx "Set Point Study for Utility Steam Electric Plant" dated x/xx/xx	ORNL	Date 12	III
24	Operating Procedures	ORNL	Date 12	IV

Number	Revision	Title
OP-1	1	DC Supply
OP-3	6	Electrical Distributions
OP-6	18	Service Water System
OP-7	13	Diesel Generator "A" and "B"
OP-9	4	Instrument and Station Air System
OP-14	22	Auxiliary-Feedwater System
OP-15	6	Circulating Water System
OP-16	13	Condensate and Feedwater
OP-16-1	3	Steam-Generators and Generator Level Control
OP-17	10	Main and Reheat Steam

TABLE 5-1 (cont)
W THREE-LOOP PLANT DATABASE FILE

Number	Revision	Title
OP-17-1	8	Steam-Generator Blowdown System
OP-19	2	Gland Seal Steam and Drain
OP-20	8	Heater Drains and Vents
OP-20-1	4	Miscellaneous Drains System
OP-21	8	Turbine, Generator, and Control
OP-23	14	Nuclear Instrumentation System
OP-24	6	Reactor-Coolant System Operation
OP-26	10	Rod Control and Position Indication
OP-28	18	Charging and Volume Control
OP-29	8	Reactor Coolant Pump Operation
OP-30	6	Pressurizer Pressure and Spray Control
OP-40	6	Component Cooling System
OP-42	18	Safety Injection and Containment Spray
OP-49	4	Post-accident Containment Venting System
OP-50	0	Low-Temperature Overpressure Protection System
OP-53	1	Condenser Drain System
OP-54	4	Core-Cooling Monitor

25 General Procedures ORNL Date 12 IV

Number	Revision	Title
GP-2	41	Cold Solid to Hot Subcritical at No Load T_{ave}
GP-3A	21	Normal Plant SU from Hot SD to Critical
GP-3B	12	Reactor Trip Recovery
GP-40	10	Power Operation
GP-5	9	Shutdown from Power to Hot Shutdown
GP-5A		Temperature and Pressure Control Using Natural Circulation
GP-6	18	Plant Cooldown from Hot SD to Cold SD

26 Abnormal Procedures ORNL Date 12 IV

Number	Revision	Title
AP-1	3	Malfunction of Reactor Control System
AP-2	3	Emergency Boration
AP-3	2	Malfunction of Reactor Makeup Control
AP-8	7	Loss of One Heater Drain Pump

TABLE 5-1 (cont)
W THREE-LOOP PLANT DATABASE FILE

Number	Revision	Title
AP-9	2	Loss of One Feedwater Pump
AP-10	2	Loss of One Condensate Pump
AP-11	5	Loss of One Circulating Pump
AP-12	4	Partial Loss of Condenser Vacuum
AP-14	7	Loss of Auxiliary Cooling
AP-15	4	Secondary Load Rejection
AP-16	2	Excessive Primary Plant Leakage
AP-17	4	Loss of Instrument Air
AP-18	4	Reactor Coolant Pump Abnormal Conditions
AP-19	4	Malfunction of RCS Pressure Control System
AP-20	1	Loss of Residual Heat Removal System (Shutdown Cooling)
AP-22	1	Loss of Service Water
AP-23	1	Loss of Containment Integrity
AP-24	0	Loss of Instrument Bus
AP-25	1	Spurious Safeguards Actuation

27 Emergency Instructions ORNL Date 12 IV

Number	Revision	Title
EI-4	32	Incident Involving Reactor Coolant System Depressurization
EI-4	2	Loss of Reactor-Coolant Flow
EI-6	9	Loss of Feedwater
EI-7	14	Station Blackout Operation
EI-14	7	Reactor Trip (Part A) Turbine and Generator Trip (Part B)
EI-15	7	Control Room Inaccessibility
EI-16	5	Post-accident Containment Venting System
EI-17	3	Emergency Diesels Failure to Start on Automatic Safety-Injection Signal or Station Blackout
EI-18	2	Loss of Emergency Busses (480V) and/or Station DC Batteries

TABLE 5-1 (cont)
W THREE-LOOP PLANT DATABASE FILE

DB No.	Description	Sender	Date	Volume
28	SI Pump data, HPSI and RHR	Utility	Date 13	IV
29	Replacement Steam-Generator Data	Utility	Date 13	IV
30	SI Data Book 1:~Contains later SI pump data, RHR system, HPSI system, isometrics, P&IDS, and other data	Utility	Date 13	V

DB No.	Description	Sender	Date	Volume
31	Drawings	Utility	Date 14	Filed separately

DWG. No.	Title
	Flow Diagram of Feedwater condensate and air evacuation system
	Safety-Injection System, Sheet 1
	Reactor-Coolant System Piping
	RHR System Piping
	SI System, Sheet 2
	SI System Sections
	Reactor-Coolant Loop Piping
	Flow diagram of heater drains and vents
	Main Steam and Feedwater
	Piping, Sheet 1
	MS & FW Piping, Sheet 2
	MS & FW Piping, Sections
	Turbine & Ext.~Steam Piping
	Condensate Piping Section
	SG General Arrangement
	Vessel cross-sectional views

TABLE 5-1 (cont)
W THREE-LOOP PLANT DATABASE FILE

DB No.	Description	Sender	Date	Volume
32	Report: Set Point Revision for xxxx MWt Operations	Utility	Date 15	V
33	Master instrument list	Utility	Date 15	V
34	WCAP xxxx plant justification for operation at xxxx MWt	Utility	Date 16	Filed separately
35	Replacement SG Data — copy of DB-29	ORNL	Date 16	Filed with DB-29
36	Drawing X-xxxxxx heater drain vent system	ORNL	Date 16	Filed separately
37	Auxiliary FW head curves, both motor driven and steam driven	Utility	Date 18	V
38	AO Training Manual Handouts: CVCS Turbine & Control Condensate	Utility	Date 18	V
39	RO Training Manual Handout: Turbine Control	Utility	Date 18	V
40	xxxx MWt PLS	Utility	Date 18	V
41	Drawing X-xxxxxxx vessel	Utility	Date 19	Filed separately
42	Control-Block Diagrams $\Delta T/T_{ave}$ Steam-dump control Drawing T_{ave}–DT protection system Pressurizer level control Numbers & Pressurizer pressure control S/G level control S/G break protection	Utility	Date 19	V
43	Isometrics without dimensions (EBASCO drawings) Main Steam Piping (2) Feedwater Piping (3) Condensate Piping (10) Safety Vent Valves (2) Safety Injection (10) Reactor Coolant (1) Residual Heat (1)	Utility	Date 19	Filed separately

TABLE 5-1 (cont)
W THREE-LOOP PLANT DATABASE FILE

DB No.	Description	Sender	Date	Volume
44	Plant Technical Specifications	ORNL	Date 20	VI
45	SG Drawing xxxxxxx for MOD44F	ORNL	Date 21	Filed
46	Value Data: 1. Main-steam isolation 2. Flow elements (FE) -474, -484, -494 3. Main-steam SRV schedule 4. Feedwater control 5. Pressurizer PORV 6. Main-steam safety	Utility	Date 22	VII
47	Heat loss calculation of 3-loop MSSS	Utility	Date 22	VII
48	AO student handouts: 1. Feedwater system 2. Auxiliary-feedwater system 3. CVCS 4. Heater vents 5. Turbine controls	Utility	Date 22	VII
49	Westinghouse RC pumps manual	Utility	Date 22	VII
50	ORNL information transfer of 5/20/83	ORNL	Date 23	VII
51	3-pump SI delivery curve by vendor	ORNL	Date 24	VII
52	Auxiliary-feedwater component test report	Utility	Date 25	VII
53	RO student handouts: 1. Feedwater system 2. Condensate system Extraction steam, feedwater heater, and vents and drains	Utility	Date 25	VII
54	Westinghouse SB technical manual (parts of)	Utility	Date 25	VII
55	Drawings X-xxxxxx and X-xxxxxx on main-stream and feedwater piping	Utility	Date 25	VII
56	Piping schedule list	Utility	Date 25	VII

TABLE 5-1 (cont)
W THREE-LOOP PLANT DATABASE FILE

DB No.	Description	Sender	Date	Volume
57	ORNL letter 6/3/83 — four attachments: 1. Q and A from plant meeting x/x/xx 2. Marked-up steam-dump notes 3. Marked-up copy of control system questions to utility on x/x/xx 4. ORNL documentation list of plant data received	ORNL	Date 26	VII
58	Thermal-hydraulic report for MOD44FSG	W	Date 27	VII
59	ORNL letter x/x/xx information transfer on SG (s/s/ss call) and on vessel (x/x/xx call)	ORNL	Date 28	VII
60	ORNL letter x/x/xx — System State Trees	ORNL	Date 29	VII
61	ORNL letter x/x/xx — Information Transfer on SG data for plant MOD44F SG	ORNL	Date 30	VII
62	Two items from XXXXXXXXX 1. Core-normalized axial power profile 2. Main-steam PORV data sheet	Utility	Date 31	VII
63	EG&G teleconference memo x/x/xx Questions and answers on: 1. Feedline polishers and demineralizers 2. Steam-line PORVs 3. DPs along feed and steam lines 4. HP heater bypass lines	EG&G	Date 32	VII
64	ORNL letter x/xx/xx teleconference call about: 1. Maximum steam-line flow 2. Percent moisture carryover 3. Upper-head temperature 4. Upper-head volume 5. Vessel metal masses 6. Core DP			VII
65	EG&G memo on x/x/xx cell: SG and Vessel data	EG&G	Date 33	VII
66	EG&G memo on x/x/xx call on feedlinne polishers	EG&G	Date 34	VII

TABLE 5-1 (cont)
W THREE-LOOP PLANT DATABASE FILE

DB No.	Description	Sender	Date	Volume
67	ORNL letter on x/x/xx meeting 1. Summary of x/x/xx meeting 2. Utility data commitments 3. Steam-line break scenarios 4. Transient scenarios (8) 5. Q and A from plant meeting of x/x/xx 6. Meeting agenda	ORNL	Date 35	VII
68	Graphs of Tave and DT program. Also same data received from ORNL x/x/xx	Utility	Date 36	VII
69	ORNL letter x/x/xx — Information transfer: 1. Steam-dump valve specifications 2. Pressurizer pressure-tab location 3. MFW flow DP 4. AFW information 5. Modifications to MFW flow 6. SG level calibration 7. SG data correction 8. RCP trip 9. Updated documentation list	ORNL	Date 37	VII
70	Westinghouse summary of all vessel data	Utility	Date 38	VII
71	EG&G memo on x/x/xx call on water temperature for HPI, LPI, accumulator, and AFW	ORNL	Date 39	VII

Acronyms used in this table are defined below.

AFW	Auxiliary feedwater
AO	Advanced operator
CVCS	Chemical volume control system
DC	Direct current
FE	Flow elements
FW	Feedwater
HPI	High-pressure injection
HPSI	High-pressure safety injection
HVAC	Heating, ventilation, air conditioning

LPI	Low-pressure injection
MSSS	Main-steam supply system
NRC	Nuclear Regulatory Commission
ORNL	Oak Ridge National laboratory
PLS	Precautions, limitations, set points
PORV	Power-operated relieve valve
P&ID	Piping and instrumentation
Q&A	Questions and answers
RCS	Reactor-cooling system
RHR	Residual heat removal
RHRS	Residual heat removal system
RO	Reactor operator
SD	Shutdown
SG	Steam generator
SI	Safety injection
SRV	Safety relief valve
SU	Startup
DT	Temperature difference
Tave	Average temperature
WCAP	Westinghouse report designation, acronym unknown
W	Westinghouse

TABLE 5-2
ZION-1 NUCLEAR POWER PLANT DATABASE (FSAR ONLY)

No.	Item	Description
1	Table 4.1-5	SG design data
2	Fig. 6.7-1	Auxiliary-feedwater system
3	Fig. 4.2-1	Reactor-coolant system
4	Table 4.1-4	Pressurizer and pressurizer-relief tank design data
5	Table 4.1-3	Reactor-vessel design data
6	Fig. 4.2-2	Reactor-vessel schematic
7	Table 3.2.3-1	Core mechanical-design properties
8	Fig. 3.2.3-6	Upper-core support structure
9	Fig. 3.2.3-9	Fuel assembly
10	Section 3.2.	Mechanical design and evaluation
11	Table 4.1-1	System design and operating parameters
12	Table 4.2-1	Construction materials of the reactor-system components
13	Table 4.1-7	Reactor-coolant piping design parameters
14	Table 4.1-2	Reactor-coolant system design pressure settings
15	Table 6.2-2	Accumulator-design parameters
16	Table 6.2-3	Boron-injection tank design parameters
17	Table 6.2-4	Refueling water-storage tank design parameters
18	Fig. 14.3.2-14	Safety-injection delivery
19	Table 4.1-9	Reactor-coolant system design pressure drop
20	Table 4.1-8	Pressurizer-valves design parameters
21	Table 4.1-6	Reactor-coolant pumps design data

Step 1. Your first step should be to draw a schematic of the plant systems that you intend to model. In the first instance, this can be a simple line diagram. For example, the primary-system drawing would show the relative arrangement of the reactor vessel, the hot and cold legs, the reactor-coolant pumps, steam generators, pressurizer, accumulators, high-pressure injection system, and low-pressure injection system. If you are not sure whether or not you will incorporate a given element in the model, include it

in the line diagram. An example schematic of a three-loop plant primary system is shown in Fig. 5-3. You should also prepare a similar diagram for the secondary system if it is to be included in the plant model.

Step 2. Your second step should to be to refine the simple line diagrams by preparing a second set of diagrams that subdivide the systems into components. To do so, you need to have a basic knowledge about the specific component models available in TRAC-M and how they are to be applied. Table 5-3 describes the TRAC components by name and function. Because this tabulation is brief, the user is referred to Section 4.0. for a more detailed description of each component. Sample component-level diagrams for the three-loop plant primary and secondary systems are presented in Figs. 5-4 and 5-5.

Guideline 1. Divide the plant model into as few TRAC-M components as possible. The reason for doing this is for computational efficiency; having fewer components reduces the size of the TRAC-M network matrix that must be solved and reduces the number of subroutine calls. There are several examples of this approach in Fig. 5-4. The PUMP component includes some of the cold-leg piping. A TEE component is used when a separate side-leg connection needs to be modeled [for example, the high-pressure safety injection (HPSI), chemical and CVCS, and pressurizer side-leg pipes from the cold- and hot-leg pipe].

Guideline 2. Develop a rational component and junction numbering scheme. There are many possible schemes. The approach taken in the three-loop plant model was to use related numbers for similar components in different loops (for example, the hot-leg PIPE

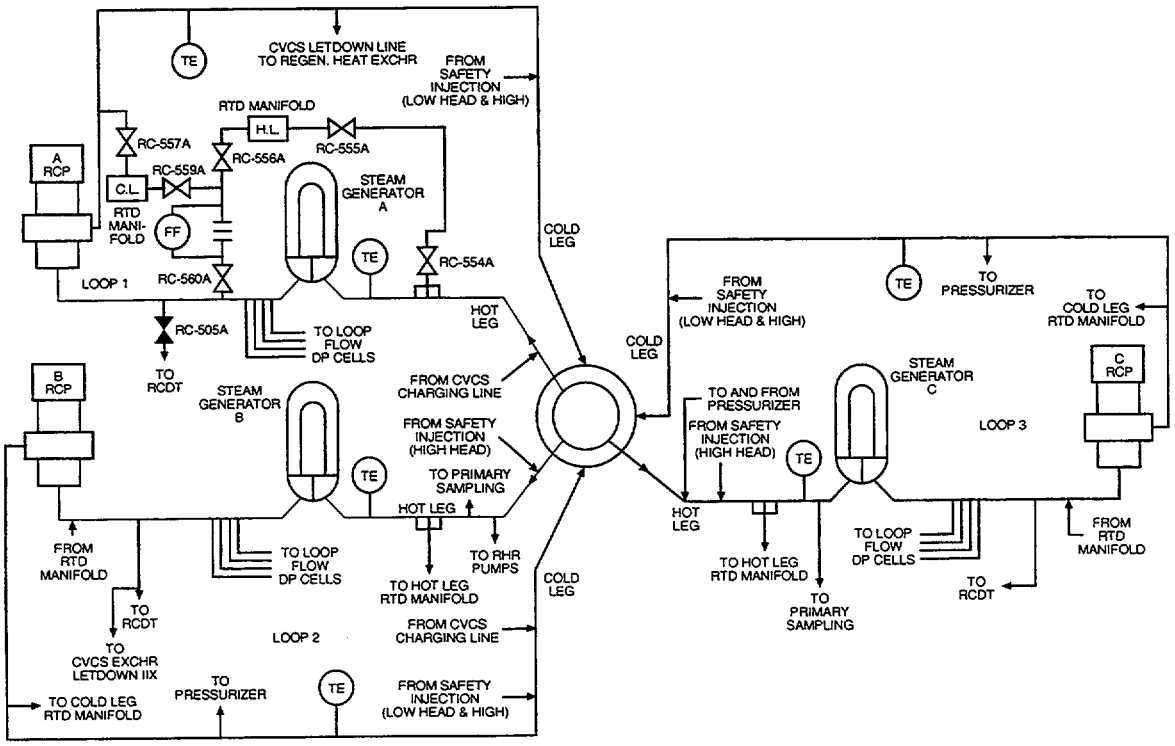

Fig. 5-3. Primary-side reactor-coolant system diagram for a three-loop plant.

TABLE 5-3
TRAC-M COMPONENTS

Name	Description	Applications
BREAK	Models boundary conditions at the terminal junction of any 1D hydraulic component.	Specifies pressure boundary condition. Specifies fluid properties for inflow from a boundary, for example, the containment building.
FILL	Models boundary conditions at the terminal juction of any 1D hydraulic component.	Specifies velocity or mass-flow boundary conditions. Specifies fluid properties for inflow from a boundary, for example, for feedwater flow.
HTSTR ROD or SLAB	Models a solid cylinder or slab for which the temperature distribution is to be computed.	Most frequently used to model fuel rods and structural hardware inside a vessel and steam generator.
PIPE	Models flow in a 1D pipe or duct with direct energy deposition in the fluid or from the walls of the pipe.	Models pipe-like structures. A general connector between components to model a system or parts of other structures such as a steam-generator and reactor-vessel down-comer. May be used to model pressurizers or accumulators.
PLENUM	Models a large volume connected to an arbitrary number of 1D hydraulic components.	A single-cell component that acts like a momentum sink or a convector of momentum in one direction only.
PRIZER	Models a PWR pressurizer in one dimension.	Recommended for modeling the heater/ sprayer section of a pressurizer.
PUMP	Models the one-dimensional interaction of a fluid with a centrifugal pump that includes two-phase effects.	Centrifugal pumps.
SEPD	Use not recommended. To be replaced in TRAC-M/F90. Models TEE-like geometry with a coolant-phase separator model.	Steam-generators secondary side.
TEE	Models flow in two one-dimensional pipes or ducts and their common juction. Models either direct energy deposition in the fluid or through the walls of the pipe.	Models pipe-like structures where a 3-way branch capability is needed.
TURB	Only in TRAC-M/F77. New turbine component model to be incorporated in TRAC-M/F90. Use model in TRAC-M/F77 with caution. Models a single stage of a turbine device which extracts energy from the working fluid and produces power. A multistage turbine is modeled by coupling multiple TURB components.	Impulse and reaction turbines.
VALVE	Models the flow through a one-dimensional pipe with the feature of an adjustable flow area.	Various types of valves in PWRs, e.g. check, trip-controlled, and controller-activated valves.
VESSEL	Models a PWR vessel and its internals in Cartesian or cylindrical geometry and in one, two, or three dimensions.	Any vessel-like structure in three dimensions but most applicable to the vessel of a nuclear reactor or a test facility modeling a nuclear reactor.

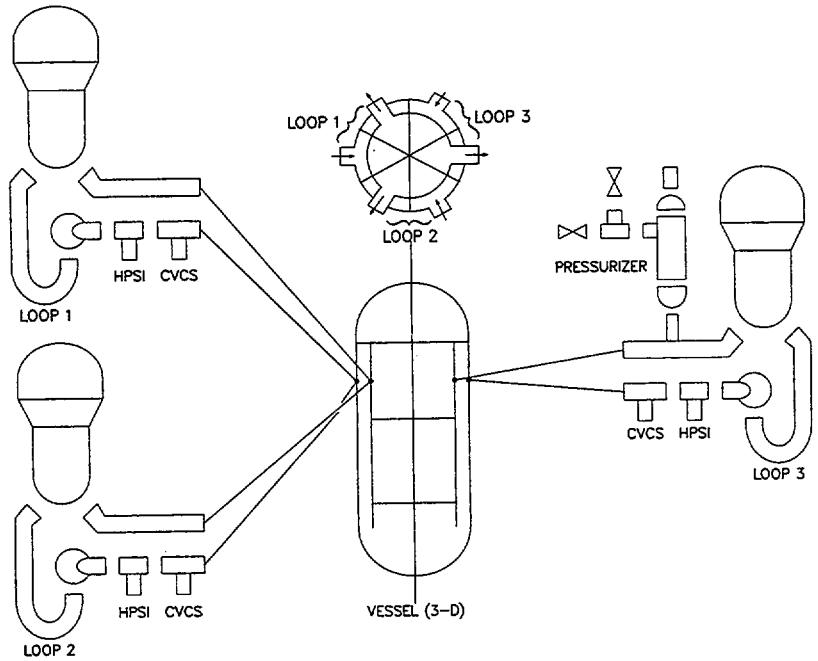

Fig. 5-4. Primary-system modeling overview for a three-loop plant.

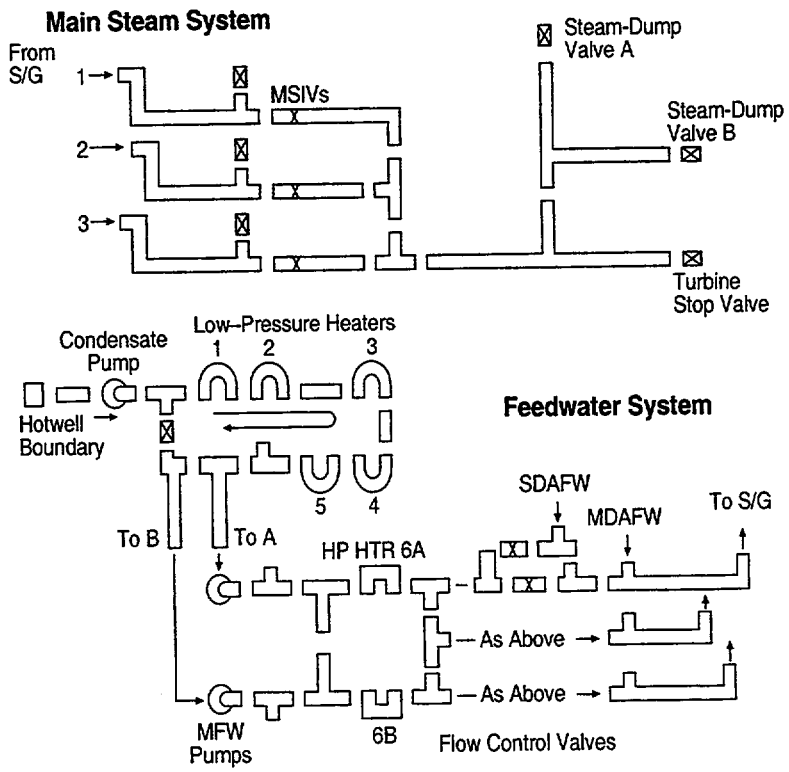

Fig. 5-5. Secondary-system modeling overview for a three-loop plant.

components are numbered 10 and 20 in loops 1 and 2, and the corresponding hot-leg TEE component is numbered 30 in loop 3; the tens digit is the loop number and the units digit reflects the component-order in going from the vessel's hot-leg connection to its cold-leg connection).

Guideline 3. As conveniently as possible, try to include all the modeling elements required (control procedures and components) in the steady-state calculation input-data model.

Step 3. Your third step is to prepare noding diagrams for each of the systems to be modeled. We continue with the three-loop plant model that we are using as an example (see Appendix E for a detailed discussion). Figure 5-6 is the reactor-vessel noding diagram; Fig. 5-7 shows the reactor-vessel HTSTR (heat structure) components; Fig. 5-8 is the steam-generator noding diagram; Figs. 5-9, 5-10, and 5-11 are the noding diagrams for the three primary loops; Fig. 5-12 is the emergency-core-cooling system noding diagram; Fig. 5-13 presents the main-steam system and steam-dump system noding diagrams; and Fig. 5-14 shows the high-pressure feedwater system noding diagram. Clearly, this is quite a jump from the component diagrams to the detailed noding diagrams. However, the step is not too great if taken one component at a time. Maintain an awareness of the transients you intend to analyze while preparing your steady-state calculation TRACIN input-data file. Figure 5-15 shows the modeling for a steam-generator tube-rupture transient initiator that was included in the three-loop plant steady-state input-data model. A second approach is to prepare the steady-state input-data model so that it can be easily updated to include additional modeling elements in the transient-restart TRACIN input-data file. Figure 5-16 illustrates the modeling changes for a SBLOCA in a restart TRACIN file. The position of the break-flow model can be identified by reference to Fig. 5-10.

To node each component effectively, you will need the detailed guidelines presented in Section 7.0. However, this is the appropriate place to give general guidance about good noding practice. We emphasize noding practices as a general guideline because these decisions can strongly affect the cost of each calculation, the physical phenomena that can be resolved, and the degree of ease or difficulty with which TRAC calculates its thermal-hydraulic solution.

Guideline 1. Make each 1D thermal-hydraulic cell as large as you can justify. We recommend that you specify lengths of 1D cells that are between 0.1 m (0.3281 ft) and 3.0 m (9.8425 ft) and do not result in a cell with ýX/D < 1.0; we generally use lengths toward the upper end of the range when spatial variation in the thermal-hydraulic solution is expected to be small. TRAC-M uses the stability enhancing two-step SETS numerical method. SETS numerics eliminates the material-Courant timestep limitation on the hydraulic solution (the maximum ratio of fluid velocity to cell length can be greater than unity). However, there are other timestep limiters related to the size of the cell. These include timestep checks on the gas volume fraction and pressure variation in time within a cell. Smaller cells are more susceptible to requiring smaller timesteps and should be avoided when possible.

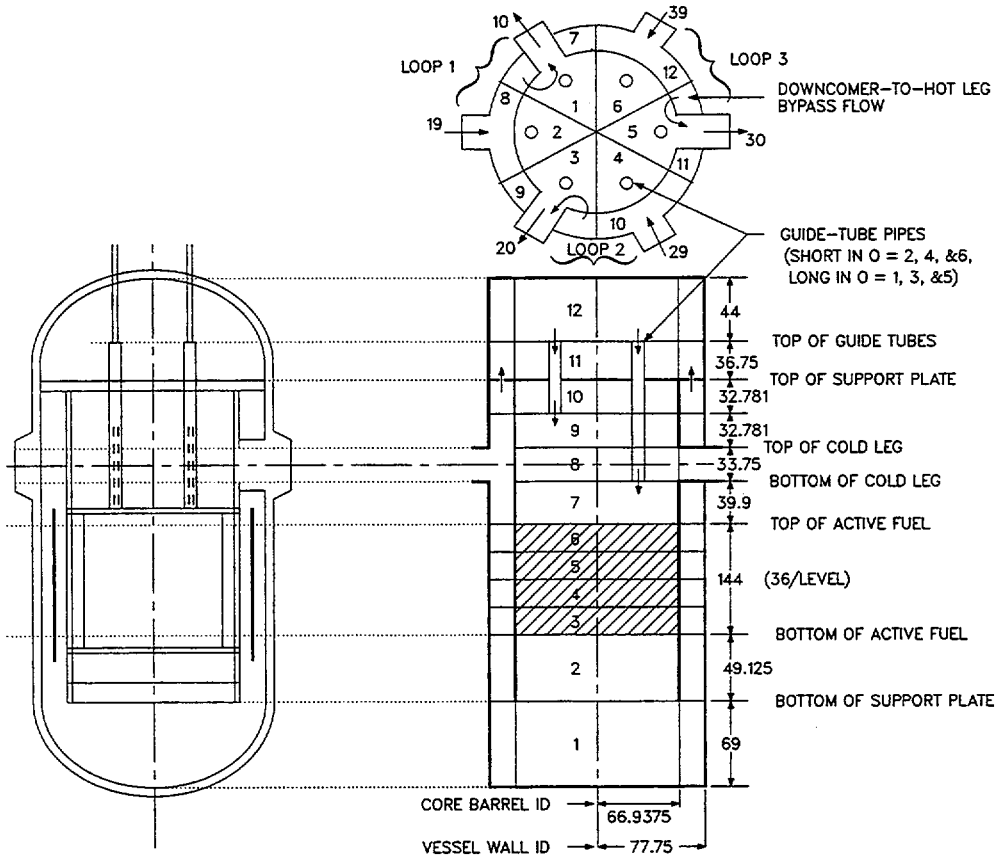

Fig. 5-6. Reactor-vessel noding diagram for a three-loop plant.

Guideline 2. Small cell sizes also should be avoided in the 3D VESSEL component. A doubling of the number of cells in the VESSEL can lead to more than a doubling of the computational time for that component. That is because each vessel matrix (combining all modeled VESSELs) is inverted directly by the capacitance-matrix method in the inner-most level of the prep-, outer-, and post-stage hydraulic solutions. The gas volume fraction and pressure variation in time in each cell limit the timestep. Smaller cells are susceptible to more localized rapid transient behavior, which limits the timestep size and should be avoided when possible.

Guideline 3. Cell sizes smaller than the guidelines are sometimes required in a localized region to resolve (accurately calculate) phenomena that are of particular interest. For example, we have found it necessary to use fine noding to track the formation of liquid plugs in a portion of the cold leg following initiation of emergency core-coolant injection. It should be noted that accurate results for full-scale cold-leg injection tests have been obtained with $0.7 < \acute{y}X/D < 2.5$ nodings (see the UPTF-8b separate-effects test in the TRAC-M Developmental Assessment manual). We also have used finer noding to closely follow liquid levels on the steam-generator secondary side.

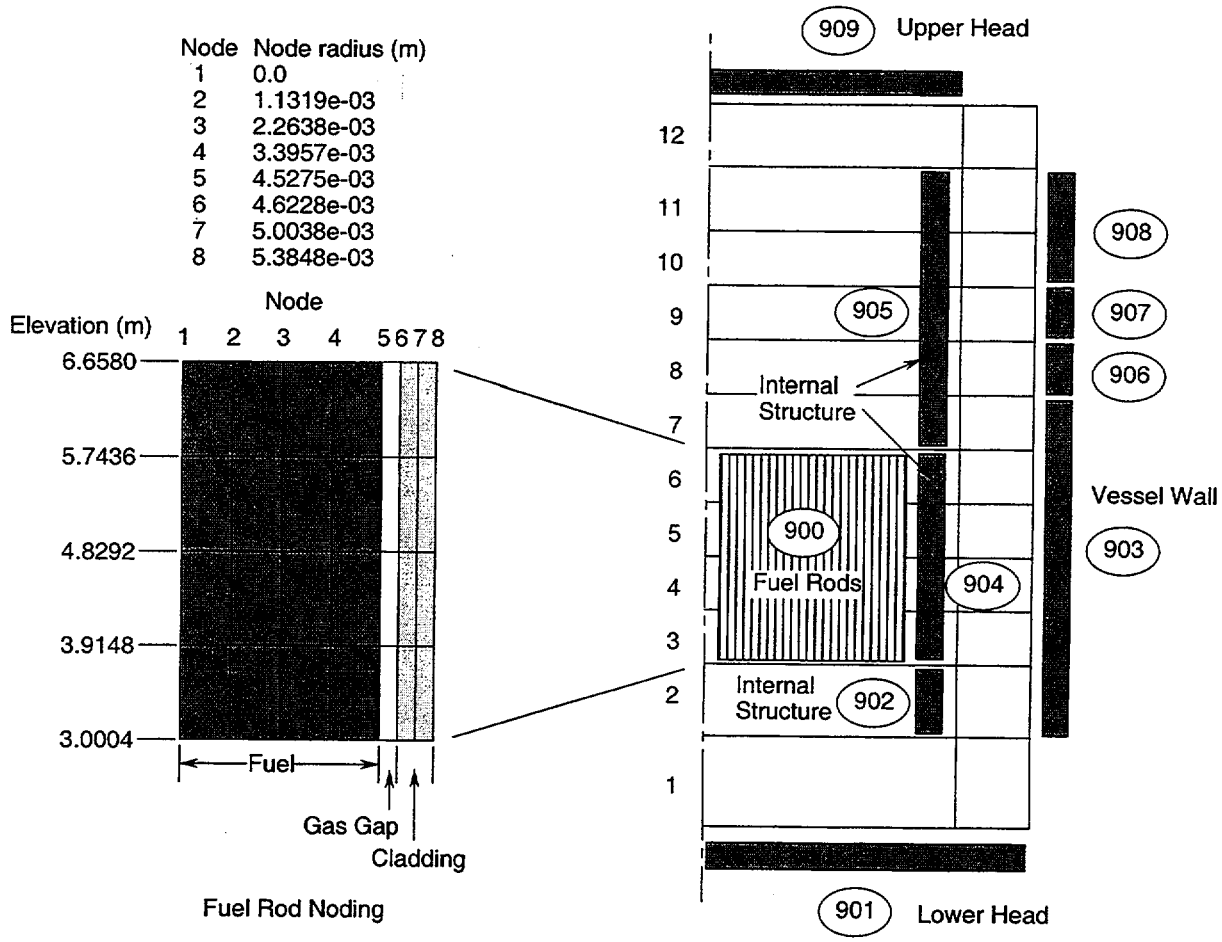

Fig. 5-7. Reactor-vessel HTSTR (heat structure) components for a three-loop plant.

Guideline 4. After determining cell lengths, volumes, and flow areas, it is necessary that all irreversible form losses be estimated either from available plant data or from appropriate fluid-flow handbooks. The TRAC-M momentum-convection terms with flow-area ratios account for only reversible losses. Please note that for abrupt flow-area changes, a NFF < 0 will cause TRAC-M to estimate from the input geometry with an internal evaluation an abrupt flow-area change irreversible form loss. However, for smooth flow-area changes, the user must estimate an appropriate irreversible form loss to be input-specified by a FRIC (or K factor).

Step 4. Your fourth step is to prepare the input for the control procedure and components. Specific guidelines for preparing this input will be provided in Section 7.3.; however, here are some general guidelines that will help you.

Guideline 1. There is a natural order to follow in preparing your input data. You should first prepare the component input data and then prepare the control-procedure input data for the component actions. This order is different from that in which the data are entered into the TRAC-M input-data file TRACIN. Because signal-variable, control-block, and ID numbers must be entered as part of the component data (when the

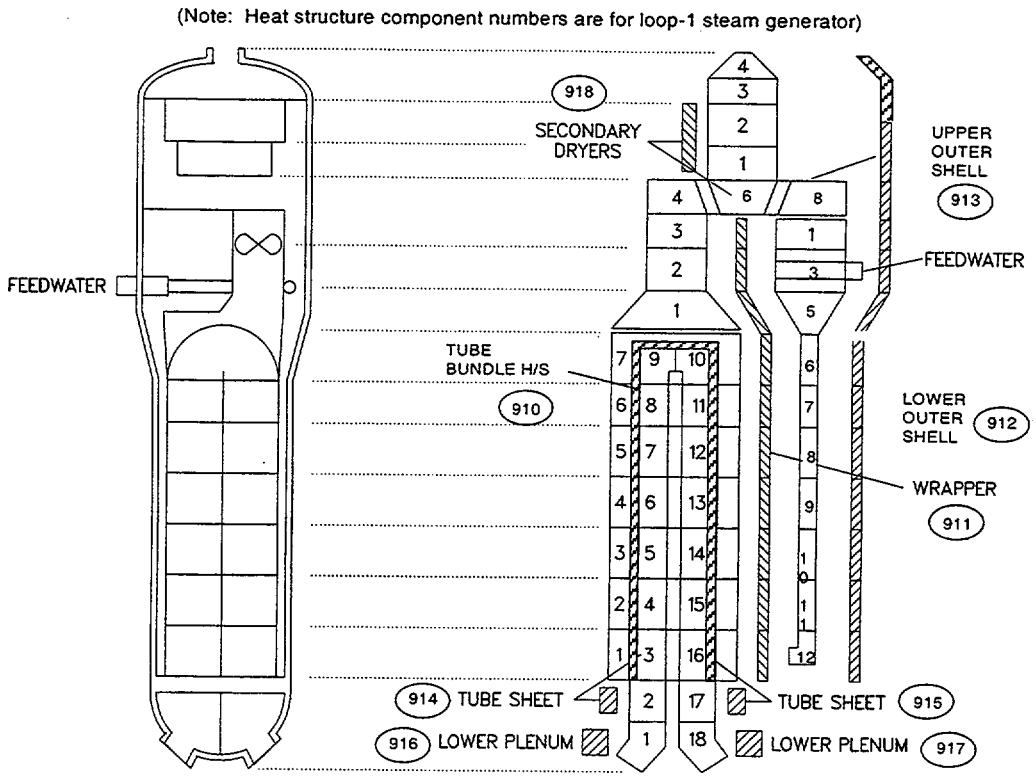

Fig. 5-8. SG noding diagram for a three-loop plant.

component has one or more component actions), you will need to make several passes through these component-data models before they are complete. It is helpful to keep a side list to identify these components that require control-procedure ID numbers for their component actions.

Guideline 2. Take time to annotate the parameters of your input-data TRACIN file as you specify their values. The time investment will be small, but the dividends for you and subsequent users of your input-data file are large. A sample annotation scheme for TEE components is presented in Fig. 5-17. Experienced TRAC-M users prepare input templates for repetitive components such as PIPEs, TEEs, VALVEs, etc. before developing an input-data file. The input template for a TEE component could be a file that looks like Fig. 5-17 with the data removed. The template file could then be copied and data values entered for each TEE component in the plant or facility system model. Input-data files without annotation can be quickly and easily annotated with the INLAB option (see NAMELIST-input variable INLAB, Section 6.3.1.). TRAC-M outputs to the INLAB file (I/O channel number INLAB = 3) all the TRACIN-file data in SI (IOLAB = 0) or English (IOLAB = 1) units with Fortran variable name annotation. Any user annotation in the TRACIN file will need to be copied manually to the INLAB file before INLAB becomes the new TRACIN file.

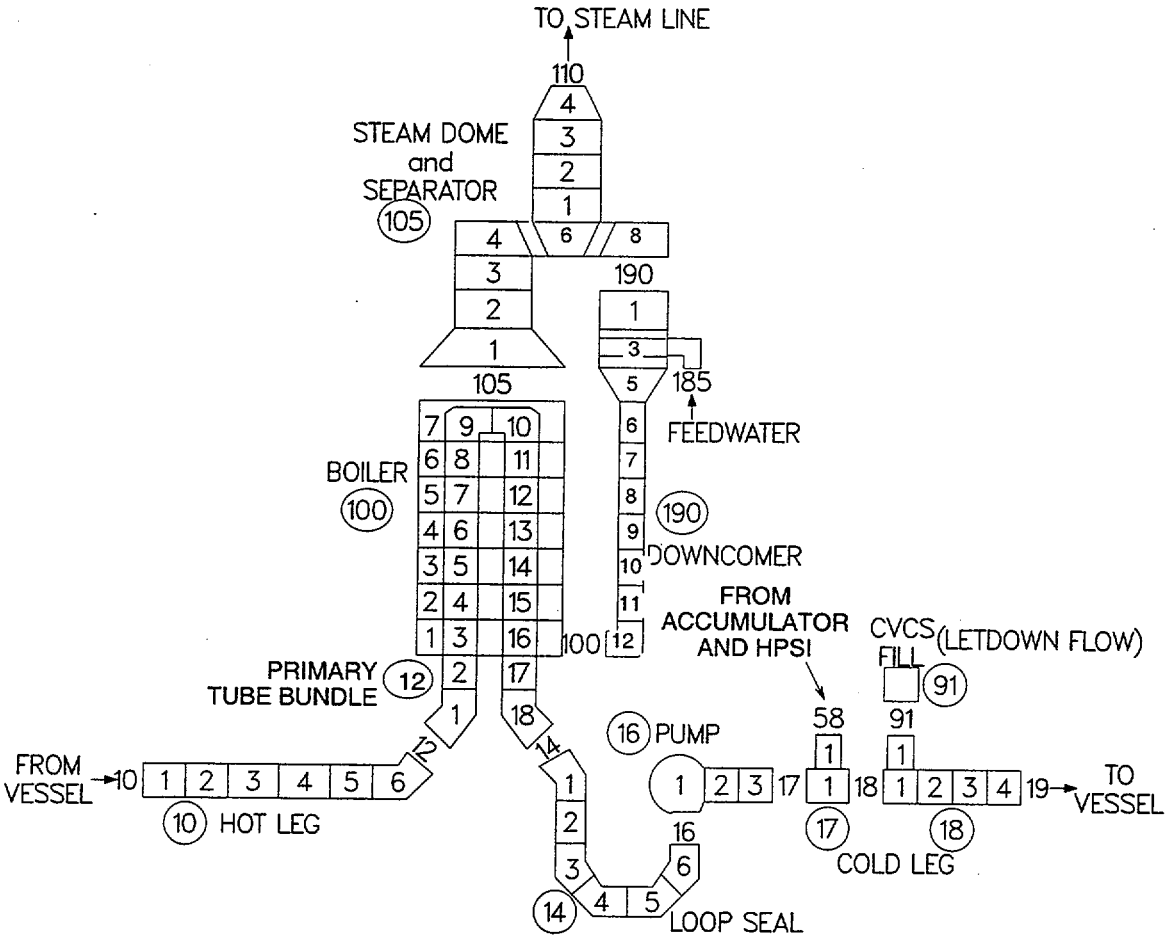

Fig. 5-9. Noding diagram for primary-system loop 1 for a three-loop plant.

Guideline 3. TRAC-M uses ID numbers as identifiers for signal variables, control blocks, and trips of the control procedure. Although not required, we have found it helpful to predefine numbering schemes for the signal variables, control blocks, and trips. These numbering schemes make it easier to locate specific ID numbers in the input-data file, interpret the output, and complete diagnostic activities. For example, some users identify positive ID-number signal variables and negative ID-number control blocks by ± four-digit integers with a zero in the thousandth column. Thus, the problem-time signal variable ID could be 0001 (or 1), the reactor-core power signal variable ID in VESSEL component 300 could be 0300 (or 300), and the pressure drop across the main steam-flow control valve of VALVE component 236 on the secondary side of loop 3 could be 0236 (or 236). A control block with ID -0300 (or -300) could integrate the reactor-core power, and a control-block network to control VALVE component 236 could begin withcontrol block ID -231. Having done this, all trip ID numbers would be defined with ± four-digit integers with a nonzero in the thousandth column. That thousandth-column digit could be different for different groupings of trips that do different control functions.

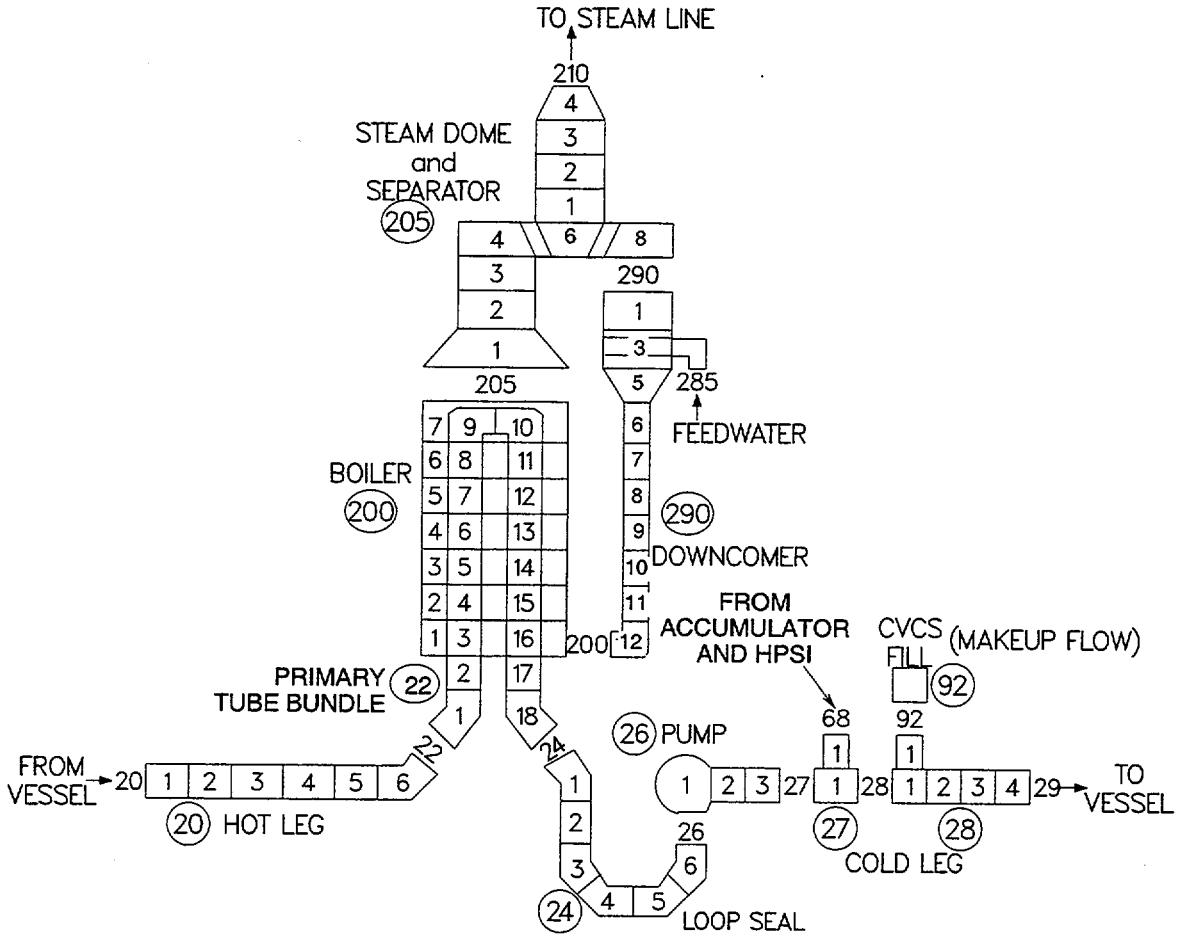

Fig. 5-10. Noding diagram for primary-system loop 2 for a three-loop plant.

Step 5. The fifth, and final, step is to assemble the control procedure and individual components that you have defined into a complete TRAC-M input-data TRACIN file and execute TRAC-M with that data as input.

Guideline 1. Check your TRCOUT-file output echo of the input data to ensure that the values that TRAC-M reads in and uses for each input-data variable are the values you intended. There is a straightforward way to accomplish this. You can provide TRAC-M with a TEND end time of 0.0 s defined by one timestep data set at the end of the TRACIN file. TRAC-M reads and processes your input data, outputs an input-data echo, initializes the remaining component variables with appropriate output information, and then ends the calculation at the start of the first timestep.

Guideline 2. Carefully review the TRAC-M output TRCMSG and TRCOUT files (see Fig. 5-2). Many times, TRAC-M's diagnostic warning messages will help you to eliminate a difficulty you are encountering. If TRAC-M finds any input values that are invalid, by its extensive internal input-data checking procedure, warning messages for each invalid value detected are output. If possible, TRAC-M aborts the calculation after all input data have been read in and processed. From experience with new input-data

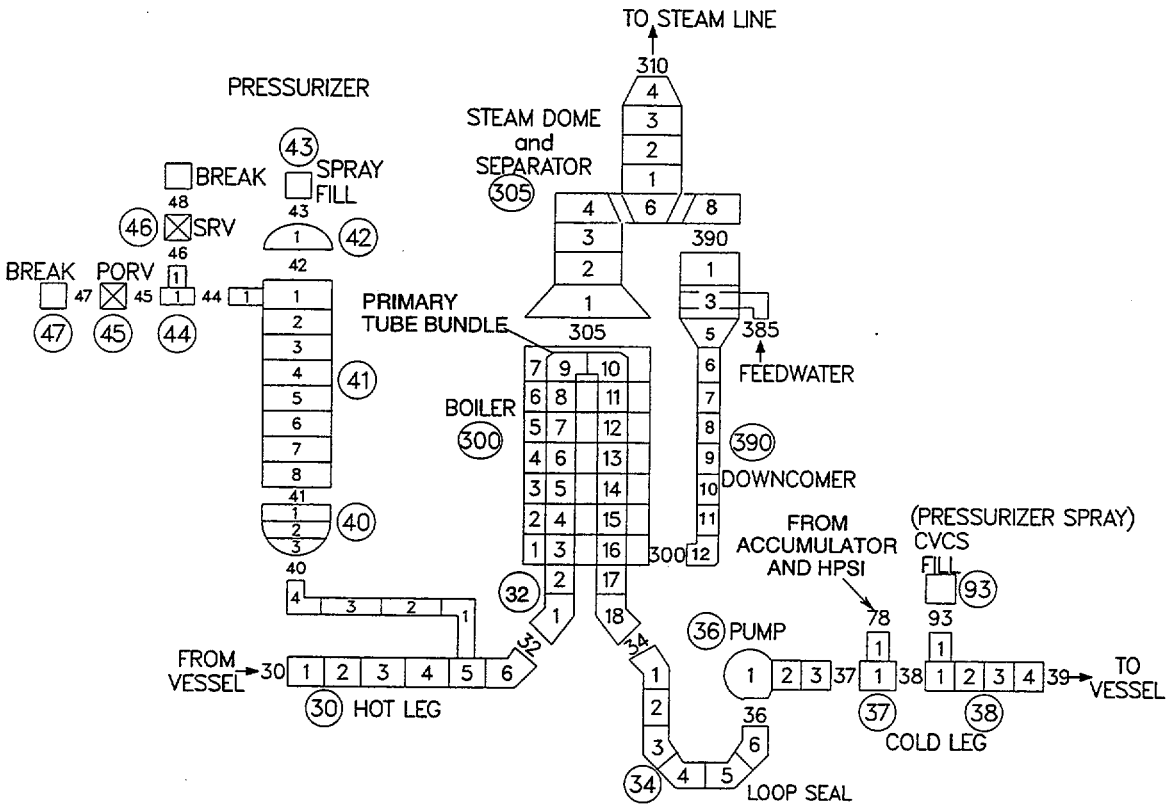

Fig. 5-11. Noding diagram for primary-system loop 3 for a three-loop plant.

models, it is almost certain that TRAC-M will generate multiple pages of such warning messages when first executed upon a new input-data TRACIN file. TRAC-M's input-data checking procedure is a great help in eliminating out-of-range values and data inconsistencies in your plant model. We have provided annotated examples of TRAC-M diagnostic warning and fatal messages in Section 8.0.

Guideline 3. Evaluate your input-data model using the static-check, steady-state calculation option as described in Section 3.6. and input-specified on Main-Data Card 4 in Section 6.3.1. You will be able to determine if the elevation changes around your primary-coolant loop provide closure of the loop by adding to zero. If they do not, you will have a spurious natural-circulation coolant flow around the loop when there should be none.

Guideline 4. The overall pressure-change flow loss around a loop can be checked by verifying that the TRAC-M steady-state solution has the rated loop mass flow at the design or measured loop pump-impeller rotational speed. If a faster (slower) pump-impeller rotational speed is required to obtain the design or measured loop mass flow, then the total flow resistance in the loop is too high (low).

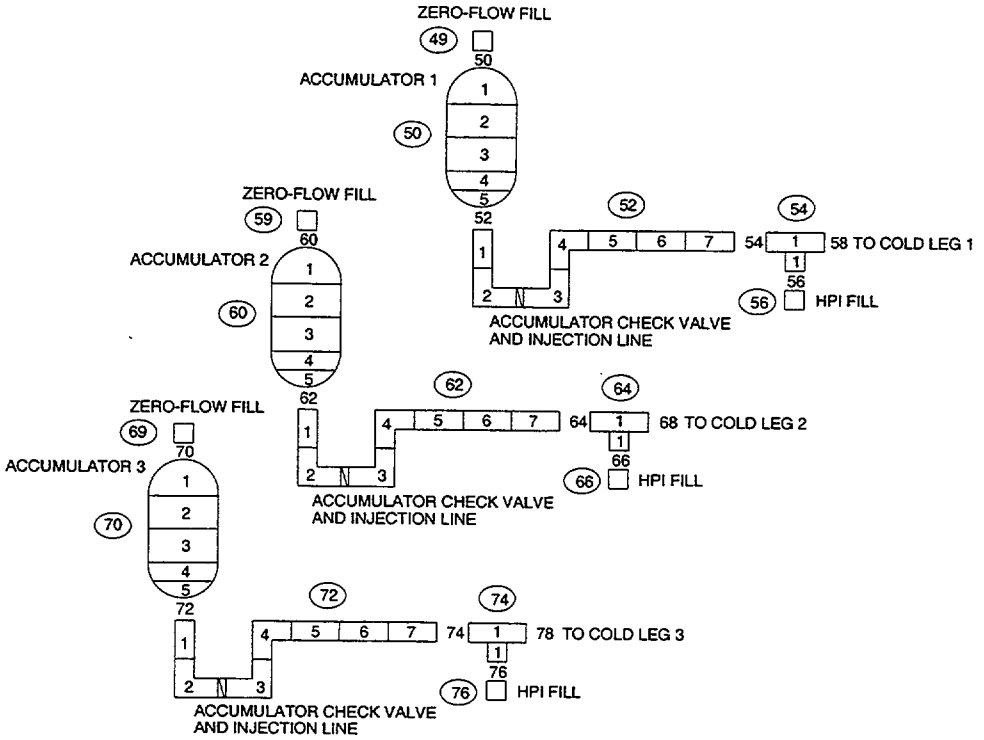

Fig. 5-12. Emergency-core-cooling system for a three-loop plant.

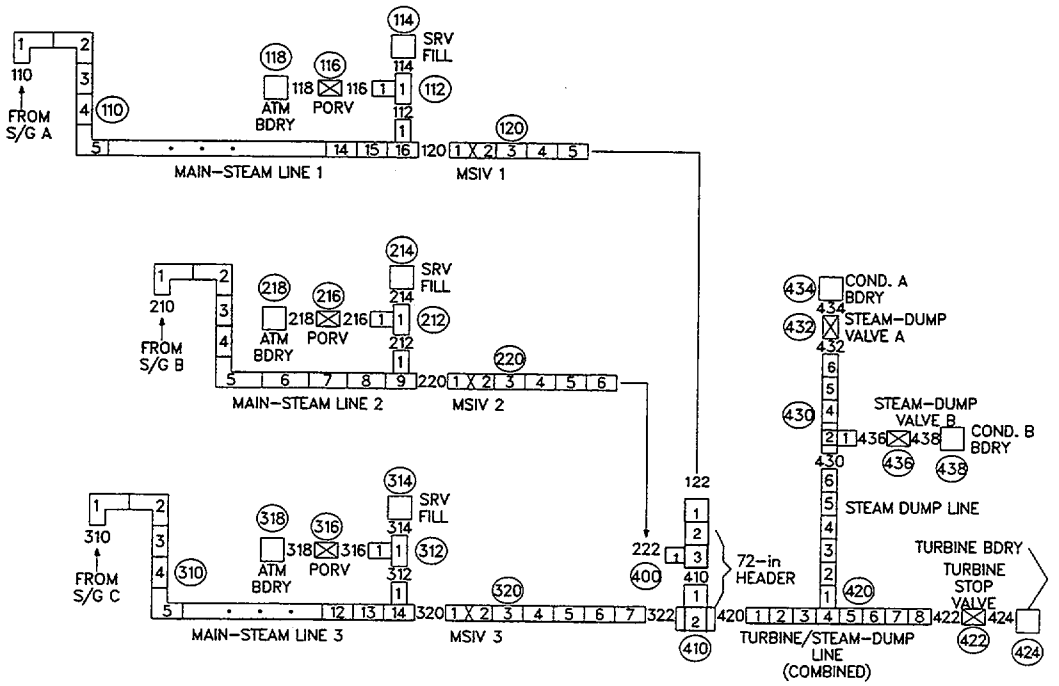

Fig. 5-13. Main-steam line and steam-dump systems for a three-loop plant.

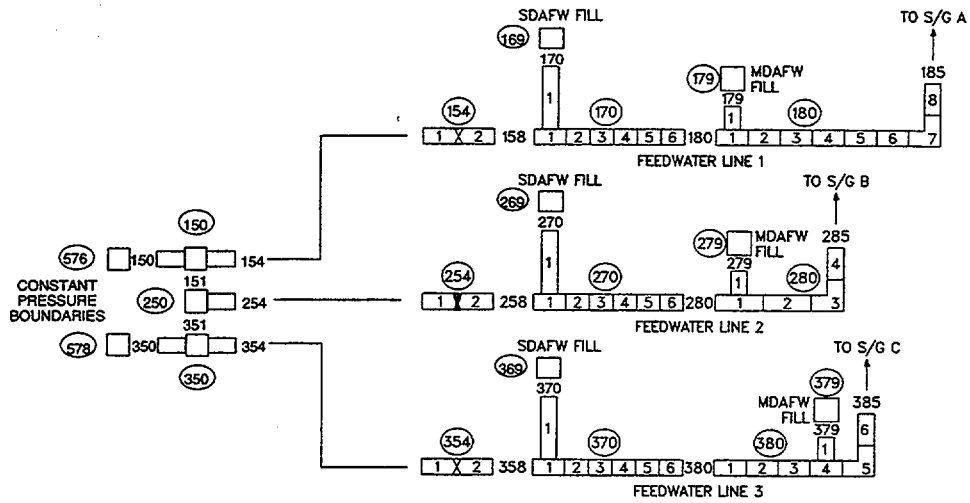

Fig. 5-14. High-pressure feedwater system for a three-loop plant.

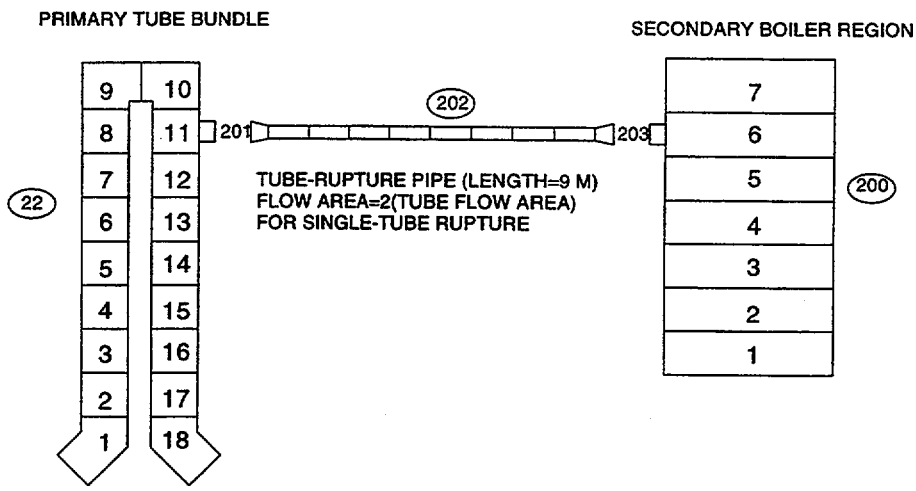

Fig. 5-15. SG tube-rupture model for a three-loop plant.

Guideline 5. Typically plant data are available on total fluid volumes within selected components or groups of components. This information should be used to check the total volume of fluid in the corresponding TRAC-M components that is output as part of the component's input-data echo.

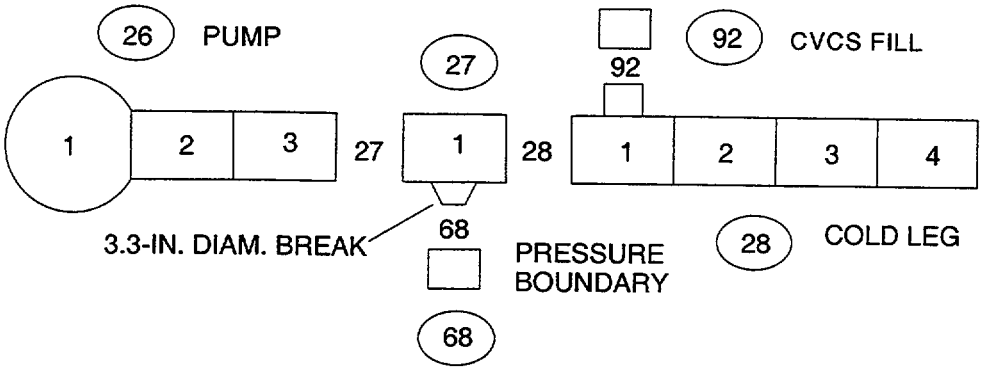

Fig. 5-16. Model changes for SBLOCA for a three-loop plant.

Guideline 6. There may be times when TRAC-M encounters a difficulty, and you are not able to diagnose the cause. If you do not have people with detailed TRAC-M knowledge at your facility, and you have exhausted the debugging remedies discussed in Section 8.2.2.3., you are encouraged to call the US NRC. To help you organize the information needed to make your contact successful, we have provided a diagnostic check list in Appendix B. Please complete this check list before contacting the US NRC at a telephone number that is provided in Appendix B.

```
*
********      type          num           id        ctitle
              tee           110          110  $110$ main steam line 1
*            jcell        nodes         ichf         cost         epsw
              16            1            0       0.0000e+00   0.0000e+00
*           iconc1       ncell1         jun1         jun2        ipow1
              1            16           110          120           0
*           iqptr1       iqpsv1       nqptb1       nqpsv1       nqprf1
              0            0            0            0            0
*           radin1        th1         houtl1       houtv1       toutl1
        3.0493e-01   2.5270e-02   0.0000e+00   0.0000e+00   0.0000e+00
*           toutv1       pwin1        pwoff1       rpwmx1       pwscl1
        0.0000e+00   0.0000e+00   0.0000e+00   0.0000e+00   0.0000e+00
*            qpin1       qpoff1       rqpmx1       qpscl1
        0.0000e+00   0.0000e+00   0.0000e+00   0.0000e+00
*           iconc2       ncell2         jun3        ipow2
              1            11      112     0
*           iqptr2       iqpsv2       nqptb2       nqpsv2       nqprf2
              0            0            0            0            0
*           radin2        th2         houtl2       houtv2       toutl2
        3.0493e-01   2.5270e-02   0.0000e+00   0.0000e+00   0.0000e+00
*           toutv2       pwin2        pwoff2       rpwmx2       pwscl2
        0.0000e+00   0.0000e+00   0.0000e+00   0.0000e+00   0.0000e+00
*            qpin2       qpoff2       rqpmx2       qpscl2
        0.0000e+00   0.0000e+00   0.0000e+00   0.0000e+00
*
```

Fig. 5-17. Input-data annotation example.

```
27  *  primary-side arrays in main steam line
28  *  dx     *      2.2860e+00     5.0292e+00r03     4.4806e+00r10     4.5126e+00s
29  *  dx     *      2.2860e+00e
30  *  vol    *      6.6775e-01     1.4733e+00r03     1.3088e+00r10     1.3181e+00s
31  *  vol    *      6.6775e-01e
32  *  fa     *      1.2897e-01     2.1054e–01        2.9210e–01        2.1091e–01s
33  *  fa     *      1.2972e-01     2.1091e–01f       2.9210e–01e
34  *  kfac   *  f   0.0000e+00e
35  *  rkfac  *  f   0.0000e+00e
36  *  grav   *      1.0000e+00     0.0000e+00r03–1.0000e+00f                0.0000e+00e
37  *  hd     *  f   6.0985e-01e
38  *  icfl   *                1r03          0                 1f                  0e
39  *  nff    *  r02          –1            1                 -1                  -1s
40  *  nff    *               –1f           1e
41  *  alp    *  f   1.0000e+00e
42  *  vl     *  f   0.0000e+00e
43  *  vv     *  f   0.0000e+00e
44  *  tl     *  f   5.4330e+02e
45  *  tv     *  f   5.4330e+02e
46  *  p      *  f   5.5158e+06e
47  *  pa     *  f   0.0000e+00e
48  *  qppp   *  f   0.0000e+00e
49  *  mat    *  f              9e
50  *  tw     *  f   5.4330e+02e
51  *  conc   *  f   0.0000e+00e
52  *
51  *  secondary-side arrays in relief-valves header
52  *  dx     *  f   1.0000e+00e
53  *  vol    *  f   2.9210e–01e
54  *  fa     *  f   2.9210e–01e
55  *  kfac   *  f   0.0000e+00e
56  *  revk   *  f   0.0000e+00e
57  *  grav   *  f   1.0000e+00e
58  *  hd     *  f   6.0985e–01e
59  *  icfl   *  f              0e
60  *  nff    *  f              1e
61  *  alp    *  f   1.0000e+00e
62  *  vl     *  f   0.0000e+00e
63  *  vv     *  f   0.0000e+00e
64  *  tl     *  f   5.4330e+02e
65  *  tv     *  f   5.4330e+02e
66  *  p      *  f   5.5158e+06e
67  *  pa     *  f   0.0000e+00e
68  *  qppp   *  f   0.0000e+00e
69  *  mat    *  f              9e
70  *  tw     *  f   5.4330e+02e
71  *  conc   *  f   0.0000e+00e
```

Fig. 5-17 (cont). Input-data annotation example.

REFERENCE

5-1 J. F. Dearing and R. C. Johns, "XTV Users Guide," Los Alamos National Laboratory document LA–UR–96–3545 (March 1997).