UCDAVIS
MNRC
McCLELLAN NUCLEAR RADIATION CENTER

5335 PRICE AVENUE
BUILDING 258
McCLELLAN, CA 95652
PHONE: (916) 614-6200
FAX: (916) 614-6250
WEB: http://ovcr.ucdavis.edu/mnrc

May 11, 2001

U.S. Nuclear Regulatory Commission
Attn: Document Control Desk
1 White Flint North
11555 Rockville Pike
Rockville MD 20852

Reference: University of California, Davis McClellan Nuclear Radiation Center (UCD/MNRC), Docket No. 50-607, Facility Operating License No. R-130

Subject: Requested Amendment No. 4 to Facility Operating License No. R-130. McClellan Nuclear Radiation Center

Gentlemen

It is requested that the attached proposed Revision 11 to the UCD/MNRC Technical Specifications be approved for use. The nature of the changes are explained in Section A of this letter. Also attached are the Safety Analysis Report (SAR) pages that fully describe the proposed new Iodine-125 production loop. It is requested that this experimental facility be approved for operation. The required technical specification changes associated with the operation of the iodine loop (i.e., p. 24 and 25) are included in Revision 11.

The following descriptions provide more information regarding the documents being submitted:

A. Proposed New Technical Specifications

The proposed new Technical Specifications (Revision 11) have been revised throughout and incorporate a number of changes. The vast majority of these changes are simply administrative in nature and designed to support the recent license transfer. However, there are also changes to eliminate previous formatting and typographical errors, changes to assure consistency in terminology throughout the Technical Specifications, changes to assure correct references to related documents (e.g., the Safety Analysis Report), and minor wording changes to enhance clarity. All changes are designed by a vertical bar along the right margin.

One section that is shown as a change in Revision 11 was actually approved previously by the Commission as part of Amendment No. 1 to the Facility Operating License (dated December 9, 1998). However, this change to Technical Specifications Section 3.8.3.a, did not get included into Revision 10 of the Technical Specifications and is therefore shown as a change in Revision 11.

Another Technical Specifications change to Section 3.8.1 was approved by Amendment No. 2 to the Facility Operating License (dated March 1, 1999), and involved the maximum reactivity worth of a moveable experiment. However, the new Revision 11 of the Technical Specifications also incorporates a change to Section 3.8.1, which involves the rewording of subparagraphs a through c and the addition of a new subparagraph d. The Revision 11 changes *do not* introduce any new Technical Specifications, but do use the new terminology adopted for the irradiation facilities in the center region of the reactor core (FSAR Chapter 10, Section 10.4), and do clarify the reactivity limits already approved for experiments placed in specific in-core and in-tank irradiation facilities.

Other changes to Revision 11 of the Technical Specifications which should be identified are as follows:

1. Section 2.1, Basis b: This basis has been expanded to include more detail regarding cladding integrity during pulsing operation.

2. Section 3.3, Table 3.3, Primary Coolant Core Inlet Temperature Monitor: The alarm point temperature (heat exchanger outlet temperature) has been increased from 35 degrees Centigrade to 45 degree Centigrade (FSAR Chapter 4, Table 4-21, and reference 4.40).

3. Section 4.7, Specification 4.7.a(3), 4.7.b(3) and 4.7.d(3): These specifications have all had the channel calibration frequency changed from semiannual to annual. The basis for each of these specifications addresses this change and concludes that the instrumentation will read correctly with an annual calibration.

4. Section 5.3.1: This specification is changed to add the use of 30/20 TRIGA fuel and a new core fuel loading termed a 30B core. The basis for this specification references the applicable sections in Chapter 4 of the FSAR, and FSAR Section 4.5.3 notes the limitations on this core that are subsequently included in the Technical Specifications.

5. Section 6.0: This section has numerous text changes to reflect the new licensee. In addition, there is a new Figure 6.1, Organization for Licensing and Operation, which

incorporates administrative units of the new licensee. Section 6.2 has been changed slightly to reflect the organization and duties of the Nuclear Safety Committee (NSC), and to clarify the Committee's review and audit functions. Subsection 6.6.2 was changed slightly to clarify the NSC's role in the event of a reportable occurrence.

Sincerely

Wade Richards

WADE J. RICHARDS, Ph.D.
Director
UCD/MNRC

2 Attachments:
1. UCD/MNRC Tech. Spec. Rev 11 (2 copies)
2. SAR Support Pages

cc: Dr. W. Eresian, USNRC

# TECHNICAL SPECIFICATIONS

# FOR THE

# UNIVERSITY OF CALIFORNIA - DAVIS MCCLELLAN NUCLEAR RADIATION CENTER

# (UCD/MNRC)

DOCUMENT NUMBER: MNRC-0004-DOC-11

## TECHNICAL SPECIFICATIONS APPROVAL

These "Technical Specifications" for the University of California at Davis/McClellan Nuclear Radiation Center (UCD/MNRC) Reactor have undergone the following coordination:

Reviewed by: _____
Health Physics Supervisor (Date)

Reviewed by: _____
Reactor Operations Supervisor (Date)

Approved by: _____
UCD/MNRC Director (Date)

Approved by: _____
Chairman, UCD/MNRC Nuclear Safety Committee (Date)

TECHNICAL SPECIFICATIONS

TABLE OF CONTENTS

Page

Page

# TECHNICAL SPECIFICATIONS
# FOR THE
# UNIVERSITY OF CALIFORNIA - DAVIS/MCCLELLAN NUCLEAR RADIATION CENTER (UCD/MNRC)

## General

The University of California - Davis/McClellan Nuclear Radiation Center (UCD/MNRC) reactor is operated by the University of California, Davis, California (UCD). The UCD/MNRC research reactor is a TRIGA-type reactor. The UCD/MNRC provides state-of-the-art neutron radiography capabilities. In addition, the UCD/MNRC provides a wide range of irradiation services for both research and industrial needs. The reactor operates at a nominal steady state power level up to and including 2 MW. The UCD/MNRC reactor is also capable of square wave and pulse operational modes. The UCD/MNRC reactor fuel is less than 20% enriched in uranium-235.

## 1.0 Definitions

1.1 As Low As Reasonably Achievable (ALARA). As defined in 10 CFR, Part 20.

1.2 Licensed Operators. A UCD/MNRC licensed operator is an individual licensed by the Nuclear Regulatory Commission (e.g., senior reactor operator or reactor operator) to carry out the duties and responsibilities associated with the position requiring the license.

1.2.1 Senior Reactor Operator. An individual who is licensed to direct the activities of reactor operators and to manipulate the controls of the facility.

1.2.2 Reactor Operator. An individual who is licensed to manipulate the controls of the facility and perform reactor-related maintenance.

1.3 Channel. A channel is the combination of sensor, line amplifier, processor, and output devices which are connected for the purpose of measuring the value of a parameter.

1.3.1 Channel Test. A channel test is the introduction of a signal into the channel for verification that it is operable.

1.3.2 Channel Calibration. A channel calibration is an adjustment of the channel such that its output corresponds with acceptable accuracy to known values of the parameter which the channel measures. Calibration shall encompass the entire channel, including equipment actuation, alarm or trip, and shall be deemed to include a channel test.

1.3.3 Channel Check. A channel check is a qualitative verification of acceptable performance by observation of channel behavior. This verification, where possible, shall include comparison of the channel with other independent channels or systems measuring the same variable.

1.4 Confinement. Confinement means isolation of the reactor room air volume such that the movement of air into and out of the reactor room is through a controlled path.

1.5 Experiment. Any operation, hardware, or target (excluding devices such as detectors, fission chambers, foils, etc), which is designed to investigate specific reactor characteristics or which is intended for irradiation within an experiment facility and which is not rigidly secured to a core or shield structure so as to be a part of their design.

1.5.1 Experiment, Moveable. A moveable experiment is one where it is intended that the entire experiment may be moved in or near the reactor core or into and out of reactor experiment facilities while the reactor is operating.

1.5.2 Experiment, Secured. A secured experiment is any experiment, experiment facility, or component of an experiment that is held in a stationary position relative to the reactor by mechanical means. The restraining force must be substantially greater than those to which the experiment might be subjected by hydraulic, pneumatic, buoyant, or other forces which are normal to the operating environment of the experiment, or by forces which can arise as a result of credible conditions.

1.5.3 Experiment Facilities. Experiment facilities shall mean the pneumatic transfer tube, beamtubes, irradiation facilities in the reactor core or in the reactor tank, and radiography bays.

1.5.4 Experiment Safety System. Experiment safety systems are those systems, including their associated input circuits, which are designed to initiate a scram for the primary purpose of protecting an experiment or to provide information which requires manual protective action to be initiated.

1.6 Fuel Element, Standard. A fuel element is a single TRIGA element. The fuel is U-ZrH clad in stainless steel. The zirconium to hydrogen ratio is nominally 1.65 +/- 0.05. The weight percent (wt%) of uranium can be either 8.5, 20 or 30 wt%, with an enrichment of less than 20% U-235. A standard fuel element may contain a burnable poison.

1.7 Fuel Element, Instrumented. An instrumented fuel element is a standard fuel element fabricated with thermocouples for temperature measurements. An instrumented fuel element shall have at least one operable thermocouple embedded in the fuel near the axial and radial midpoints.

1.8 Measured Value. The measured value is the value of a parameter as it appears on the output of a channel.

1.9 Mode, Steady-State. Steady-state mode operation shall mean operation of the UCD/MNRC reactor with the selector switch in the automatic or manual mode position.

1.10 Mode, Square-Wave. Square-wave mode operation shall mean operation of the UCD/MNRC reactor with the selector switch in the square-wave mode position.

1.11 Mode, Pulse. Pulse mode operation shall mean operation of the UCD/MNRC reactor with the selector switch in the pulse mode position.

1.12 Operable. Operable means a component or system is capable of performing its intended function.

1.13 Operating. Operating means a component or system is performing its intended function.

1.14 Operating Cycle. The period of time starting with reactor startup and ending with reactor shutdown.

1.15 Protective Action. Protective action is the initiation of a signal or the operation of equipment within the UCD/MNRC reactor safety system in response to a variable or condition of the UCD/MNRC reactor facility having reached a specified limit.

1.15.1 Channel Level. At the protective instrument channel level, protective action is the generation and transmission of a scram signal indicating that a reactor variable has reached the specified limit.

1.15.2 Subsystem Level. At the protective instrument subsystem level, protective action is the generation and transmission of a scram signal indicating that a specified limit has been reached.

NOTE: Protective action at this level would lead to the operation of the safety shutdown equipment.

1.15.3 Instrument System Level. At the protective instrument system level, protective action is the generation and transmission of the command signal for the safety shutdown equipment to operate.

1.15.4 Safety System Level. At the reactor safety system level, protective action is the operation of sufficient equipment to immediately shut down the reactor.

1.16 Pulse Operational Core. A pulse operational core is a reactor operational core for which the maximum allowable pulse reactivity insertion has been determined.

1.17 Reactivity, Excess. Excess reactivity is that amount of reactivity that would exist if all control rods (control, regulating, etc.) were moved to the maximum reactive position from the point where the reactor is at ambient temperature and the reactor is critical. ($k_{eff}$=1)

1.18 Reactivity Limits. The reactivity limits are those limits imposed on the reactivity conditions of the reactor core.

1.19 Reactivity Worth of an Experiment. The reactivity worth of an experiment is the maximum value of the reactivity change that could occur as a result of changes that alter experiment position or configuration.

1.20 Reactor Controls. Reactor controls are apparatus and/or mechanisms the manipulation of which directly affect the reactivity or power level of the reactor.

1.21 Reactor Core, Operational. The UCD/MNRC reactor operational core is a core for which the parameters of excess reactivity, shutdown margin, fuel temperature, power calibration and reactivity worths of control rods and experiments have been determined to satisfy the requirements set forth in these Technical Specifications.

1.22 Reactor Operating. The UCD/MNRC reactor is operating whenever it is not secured or not shut down.

1.23 Reactor Safety Systems. Reactor safety systems are those systems, including their associated input channels, which are designed to initiate automatic reactor protection or to provide information for initiation of manual protective action.

1.24 Reactor Secured. The UCD/MNRC reactor is secured when the console key switch is in the off position and the key is removed from the lock and under the control of a licensed operator, and the conditions of a or b exist:

a. (1) The minimum number of control rods are fully inserted to ensure the reactor is shutdown, as required by technical specifications; and

(2) No work is in progress involving core fuel, core structure, installed control rods, or control rod drives, unless the control rod drives are physically decoupled from the control rods; and

(3) No experiments in any reactor experiment facility, or in any other way near the reactor, are being moved or serviced if the experiments have, on movement, a reactivity worth exceeding the maximum value allowed for a single experiment or $1.00, whichever is smaller, or

b. The reactor contains insufficient fissile materials in the reactor core, adjacent experiments or control rods to attain criticality under optimum available conditions of moderation and reflection.

1.25 Reactor Shutdown. The UCD/MNRC reactor is shutdown if it is subcritical by at least one dollar ($1.00) both in the Reference Core Condition and for all allowed ambient conditions with the reactivity worth of all installed experiments included.

1.26 Reference Core Condition. The condition of the core when it is at ambient temperature (cold T<28°C), the reactivity worth of xenon is negligible (< $0.30) (i.e., cold and clean), and the central irradiation facility contains the graphite thimble plug and the aluminum thimble plug (CIF-1).

1.27 Research Reactor. A research reactor is defined as a device designed to support a self-sustaining neutron chain reaction for research development, education, and training, or experimental purposes, and which may have provisions for the production of radioisotopes.

1.28 Rod, Control. A control rod is a device fabricated from neutron absorbing material, with or without a fuel or air follower, which is used to establish neutron flux changes and to compensate for routine reactivity losses. The follower may be a stainless steel section. A control rod shall be coupled to its drive unit to allow it to perform its control function, and its safety function when the coupling is disengaged. This safety function is commonly termed a scram.

1.28.1 Regulating Rod. A regulating rod is a control rod used to maintain an intended power level and may be varied manually or by a servo-controller. A regulating rod shall have scram capability.

1.28.2 Standard Rod. The regulating and shim rods are standard control rods.

1.28.3 Transient Rod. The transient rod is a control rod that is capable of providing rapid reactivity insertion to produce a pulse or square wave.

1.29 Safety Channel. A safety channel is a measuring channel in the reactor safety system.

1.30 Safety Limit. Safety limits are limits on important process variables, which are found to be necessary to reasonably protect the integrity of the principal barriers which guard against the uncontrolled release of radioactivity.

1.31 Scram Time. Scram time is the elapsed time between reaching a limiting safety system set point and the control rods being fully inserted.

1.32 Scram, External. External scrams may arise from the radiography bay doors, radiography bay ripcords, bay shutter interlocks, and any scrams from an experiment.

1.33 Shall, Should and May. The word "shall" is used to denote a requirement; the word "should" to denote a recommendation; the word "may" to denote permission, neither a requirement nor a recommendation.

1.34 Shutdown Margin. Shutdown margin shall mean the minimum shutdown reactivity necessary to provide confidence that the reactor can be made subcritical by means of the control and safety system starting from any permissible operating condition with the most reactive rod assumed to be in the most reactive position, and once this action has been initiated, the reactor will remain subcritical without further operator action.

1.35 Shutdown, Unscheduled. An unscheduled shutdown is any unplanned shutdown of the UCD/MNRC reactor caused by actuation of the reactor safety system, operator error, equipment malfunction, or a manual shutdown in response to conditions which could adversely affect safe operation, not including shutdowns which occur during testing or check-out operations.

1.36 Surveillance Activities. In general, two types of surveillance activities are specified: operability checks and tests, and calibrations. Operability checks and tests are generally specified as daily, weekly or quarterly. Calibration times are generally specified as quarterly, semi-annually, annually, or biennially.

1.37 Surveillance Intervals. Maximum intervals are established to provide operational flexibility and not to reduce frequency. Established frequencies shall be maintained over the long term. The allowable surveillance interval is the interval between a check, test, or calibration, whichever is appropriate to the item being subjected to the surveillance, and is measured from the date of the last surveillance. Allowable surveillance intervals shall not exceed the following:

1.37.1 Annual - interval not to exceed fifteen (15) months.

1.37.2 Semiannual - interval not to exceed seven and a half (7.5) months.

1.37.3 Quarterly - interval not to exceed four (4) months.

1.37.4 Monthly - interval not to exceed six (6) weeks.

1.37.5 Weekly - interval not to exceed ten (10) days.

1.38 Unreviewed Safety Questions. A proposed change, test or experiment shall be deemed to involve an unreviewed safety question:

a. If the probability of occurrence or the consequences of an accident or malfunction of equipment important to safety previously evaluated in the safety analysis report may be increased; or

b. If a possibility for an accident or malfunction of a different type than any evaluated previously in the safety analysis report may be created; or

c. If the margin of safety, as defined in the Basis for any technical specification, is reduced.

1.39 Value, Measured. The measured value is the value of a parameter as it appears on the output of a channel.

1.40 Value, True. The true value is the actual value of a parameter.

1.41 Watchdog Circuit. The watchdog circuit is a surveillance circuit provided by the Data Acquisition Computer (DAC) and the Control System Computer (CSC) to ensure proper operation of the reactor computerized control system.

2.0 Safety Limit and Limiting Safety System Setting.

2.1 Safety Limit.

Applicability - This specification applies to the temperature of the reactor fuel in a standard TRIGA fuel element.

Objective - The objective is to define the maximum temperature that can be permitted with confidence that no damage to the fuel element cladding will result.

Specification -

a. The maximum fuel temperature in a standard TRIGA fuel element shall not exceed 930°C during steady-state operation.

b. The maximum temperature in a standard TRIGA fuel element shall not exceed 1100°C during pulse operation.

Basis -

a. This fuel safety limit applies for conditions in which the cladding temperature is above 500°C (Safety Analysis Report (SAR), Chapter 4, Section 4.5.4.1.3). The important parameter for a TRIGA reactor is the fuel element temperature. This parameter is well suited as it can be measured directly. A loss in the integrity of the fuel element cladding could arise if the cladding stress exceeds the ultimate strength of the cladding material. The fuel element cladding stress is a function of the element's internal pressure while the ultimate strength of the cladding material is a function of its temperature. The cladding stress is a result of the internal pressure due to the presence of air, fission product gasses and hydrogen from the disassociation of hydrogen and zirconium in the fuel moderator. Hydrogen pressure is the most significant. The magnitude of the pressure is determined by the fuel moderator temperature and the ratio of hydrogen to zirconium in the alloy. At a fuel temperature of 930°C for $ZrH_{1.7}$ fuel, the cladding stress due to the internal pressure is equal to the ultimate strength of the cladding material at the same temperature (SAR Fig 4.18). This is a conservative limit since the temperature of the cladding material is always lower than the fuel temperature. (See SAR Chapter 4, Section 4.5.4.)

b. This fuel safety limit applies for conditions in which the cladding temperature is less than 500°C. Analysis (SAR Chapter 4, Section 4.5.4.1.1), shows that a maximum temperature for the clad during a pulse which gives a peak adiabatic fuel temperature of 1000°C is estimated to be 470°C. Further analysis (SAR Section 4.5.4.1.2), shows that the internal pressure for both $Zr_{1.65}$ (at 1150°C) and $Zr_{1.7}$ (at 1100°C) increases to a peak value at about 0.3 sec, at which time the pressure is about one-fifth of the equilibrium value or about 400 psi (a stress of 14,700 psi). The yield strength of the cladding at 500°C is about 59,000 psi.

Calculations for step increases in power to peak $ZrH_{1.65}$ fuel temperature greater than 1150°C, over a 200°C range, show that the time to reach the peak pressure and the fraction of equilibrium pressure value achieved were approximately the same as for the 1150°C case. Similar results were found for fuel with $ZrH_{1.7}$.

Measurements of hydrogen pressure in TRIGA fuel elements during transient operations have been made and compared with the results of analysis similar to that used to make the above prediction. These measurements indicate that in a pulse where the maximum temperature

in the fuel was greater than 1000°C, the pressure ($ZrH_{1.65}$) was only about 6% of the equilibrium value evaluated at the peak temperature. Calculations of the pressure gave values about three times greater than the measured values.

The analysis gives strong indications that the cladding will not rupture if fuel temperatures are never greater than 1200°C to 1250°C, providing the cladding temperature is less than 500°C. For fuel with $ZrH_{1.7}$, a conservative safety limit is 1100°C. As a result, at this safety limit temperature, the class pressure is a factor of 4 lower than would be necessary for cladding failure.

## 2.2 Limiting Safety System Setting.

### 2.2.1 Fuel Temperature.

Applicability - This specification applies to the protective action for the reactor fuel element temperature.

Objective - The objective is to prevent the fuel element temperature safety limit from being reached.

Specification - The limiting safety system setting shall be 750°C (operationally this may be set more conservatively) as measured in an instrumented fuel element. One instrumented element shall be located in the analyzed peak power location of the reactor operational core.

Basis - For steady-state operation of the reactor, the limiting safety system setting is a temperature which, if exceeded, shall cause a reactor scram to be initiated preventing the safety limit from being exceeded. A setting of 750°C provides a safety margin at the point of measurement of at least 137°C for standard TRIGA fuel elements in any condition of operation. A part of the safety margin is used to account for the difference between the true and measured temperatures resulting from the actual location of the thermocouple. If the thermocouple element is located in the hottest position in the core, the difference between the true and measured temperatures will be only a few degrees since the thermocouple junction is near the center and the mid-plane of the fuel element. For pulse operation of the reactor, the same limiting safety system setting applies. However, the temperature channel will have no effect on limiting the peak power generated because of its relatively long time constant (seconds) as compared with the width of the pulse (milliseconds). In this mode, however, the temperature trip will act to limit the energy release after the pulse if the transient rod should not reinsert and the fuel temperature continues to increase.

## 3.0 Limiting Conditions For Operation

### 3.1 Reactor Core Parameters

#### 3.1.1 Steady-State Operation

Applicability - This specification applies to the maximum reactor power attained during steady-state operation.

Objective - The objective is to assure that the reactor safety limit (fuel temperature) is not exceeded, and to provide for a setpoint for the high flux limiting safety systems, so that automatic protective action will prevent the safety limit from being reached during steady-state operations.

Specification - The nominal reactor steady-state power shall not exceed 2.0 MW. The automatic scram setpoints for the reactor power level safety channels shall be set at 2.2 MW or less. For the purpose of testing the reactor steady-state power level scram, the power shall not exceed 2.3 MW.

Basis - Operational experience and thermal-hydraulic calculations demonstrate that UCD/MNRC TRIGA fuel elements may be safely operated at power levels up to 2.3 MW with natural convection cooling. (SAR Chapter 4, Section 4.6.2.)

#### 3.1.2 Pulse or Square Wave Operation

Applicability - This specification applies to the peak temperature generated in the fuel as the result of a step insertion of reactivity.

Objective - The objective is to assure that the fuel temperature safety limit will not be exceeded.

Specification -

(a) For the pulse mode of operation, the maximum insertion of reactivity shall be 1.23% $\Delta k/k$ ($1.75);

(b) For the square wave mode of operation the maximum step insertion of reactivity shall be 0.63% $\Delta k/k$ ($0.90).

Basis - Standard TRIGA Fuel is fabricated with a nominal hydrogen to zirconium ratio of 1.6 to 1.7. This yields delta phase zirconium hydride which has a high creep strength and undergoes no phase changes at temperatures in excess of 100°C. However, after extensive steady state operation at two (2) MW the hydrogen will redistribute due to migration from the central high temperature

regions of the fuel to the cooler outer regions. When the fuel is pulsed, the instantaneous temperature distribution is such that the highest values occur at the radial edge of the fuel. The higher temperatures in the outer regions occur in fuel with a hydrogen to zirconium ratio that has now increased above the nominal value. This produces hydrogen gas pressures considerably in excess of that expected. If the pulse insertion is such that the temperature of the fuel exceeds about 875°C, then the pressure may be sufficient to cause expansion of microscopic holes in the fuel that grow with each pulse. Analysis (SAR Chapter 13, Section 13.2.2.2.1), shows that the limiting pulse, for the worst case conditions, is 1.34% $\Delta k/k$ ($1.92). Therefore, the 1.23% $\Delta k/k$ ($1.75) limit is below the worst case reactivity insertion accident limit. The $0.90 square wave step insertion limit is also well below the worst case reactivity insertion accident limit.

3.1.3 Reactivity Limitations

Applicability - These specifications apply to the reactivity conditions of the reactor core and the reactivity worths of the control rods and apply to all modes of reactor operation.

Objective - The objective is to assure that the reactor can be placed in a shutdown condition at all times and to assure that the safety limit shall not be exceeded.

Specification -

a. Shutdown Margin - The reactor shall not be operated unless the shutdown margin provided by the control rods is greater than 0.35% $\Delta k/k$ ($0.50) with:

(1) The reactor in any core condition,

(2) The most reactive control rod assumed fully withdrawn, and

(3) Absolute value of all movable experiments analyzed in their most reactive condition or $1.00 whichever is greater.

b. Excess Reactivity - The maximum available excess reactivity (reference core condition) shall not exceed 6.65% $\Delta k/k$ ($9.50).

Basis -

a. This specification assures that the reactor can be placed in a shutdown condition from any operating condition and

remain shutdown, even if the maximum worth control rod should stick in the fully withdrawn position (SAR Chapter 4, Section 4.5.5).

b. This specification sets an overall reactivity limit which provides adequate excess reactivity to override the xenon buildup, to overcome the temperature change in going from zero power to 2 MW, to permit pulsing at the $1.75 level, to permit irradiation of negative worth experiments and account for fuel burn up over time. An adequate shutdown margin exists with an excess of $9.50 for the two analyzed cores: (SAR Chapter 4, Section 4.5.5).

3.2 Reactor Control and Safety Systems

3.2.1 Control Rods

Applicability - This specification applies to the function of the control rods.

Objective - The objective is to determine that the control rods are operable.

Specification - The reactor shall not be operated unless the control rods are operable and,

a. Control rods shall not be considered operable if damage is apparent to the rod or drive assemblies.

b. The scram time measured from the instant a signal reaches the value of a limiting safety system setting to the instant that the slowest control rod reaches its fully inserted position shall not exceed one (1) second.

Basis -

a. The apparent condition of the control rod assemblies shall provide assurance that the rods shall continue to perform reliably as designed.

b. This assures that the reactor shall shut down promptly when a scram signal is initiated (SAR Chapter 13, Section 13.2.2.2.2).

3.2.2 Reactor Instrumentation

Applicability - This specification applies to the information which shall be available to the reactor operator during reactor operations.

Objective - The objective is to require that sufficient information is available to the operator to assure safe operation of the reactor.

Specification - The reactor shall not be operated unless the channels described in Table 3.2.2 are operable and the information is displayed on the reactor console.

Table 3.2.2
Required Reactor Instrumentation
(Minimum Number Operable)

| Measuring Channel | Steady State | Pulse | Square Wave | Channel Function | Surveillance Requirements* |
|---|---|---|---|---|---|
| a. Reactor Power Level Safety Channel | 2 | 0 | 2 | Scram at 2.2 MW or less | D,M,A |
| b. Linear Power Channel | 1 | 0 | 1 | Automatic Power Control | D,M,A |
| c. Log Power Channel | 1 | 0 | 1 | Startup Control | D,M,A |
| d. Fuel Temperature Channel | 2 | 2 | 2 | Fuel Temperature | D,M,A |
| e. Pulse Channel | 0 | 1 | 0 | Measures Pulse NV & NVT | P,A |

(*) Where:
D - Channel check during each day's operation
M - Channel test monthly
A - Channel calibration annually
P - Channel test prior to pulsing operation

Basis -

a. Table 3.2.2. The two reactor power level safety channels assure that the reactor power level is properly monitored and indicated in the reactor control room (SAR Chapter 7, Sections 7.1.2 & 7.1.2.2).

b, c, & e. Table 3.2.2. The linear power channel, log power channel, and pulse channel assure that the reactor power level and energy are adequately monitored (SAR Chapter 7, Sections 7.1.2 & 7.1.2.2).

d. Table 3.2.2. The fuel temperature channels assure that the fuel temperature is properly monitored and indicated in the reactor control room (SAR Chapter 4, Section 4.5.4.1).

### 3.2.3 Reactor Scrams and Interlocks

Applicability - This specification applies to the scrams and interlocks.

Objective - The objective is to assure that the reactor is placed in the shutdown condition promptly and that the scrams and interlocks are operable for safe operation of the reactor.

Specification - The reactor shall not be operated unless the scrams and interlocks described in Table 3.2.3 are operable:

Table 3.2.3
Required Scrams and Interlocks

| Scram | Steady State | Pulse | Square Wave | Channel Function | Surveillance Requirements* |
|---|---|---|---|---|---|
| a. Console Manual Scram | 1 | 1 | 1 | Manual Scram and Automatic Scram Alarm | M |
| b. Reactor Room Manual Scram | 1 | 1 | 1 | Manual Scram and Automatic Scram Alarm | M |
| c. Radiography Bay Manual Scrams | 4 | 4 | 4 | Manual Scram and Automatic Scram Alarm | M |
| d. Reactor Power Level Safety Scram | 2 | 0 | 2 | Automatic Scram Alarm & Scram at 2.2 MW or less | M |
| e. High Voltage Power Supplies Scrams | 2 | 1 | 2 | Automatic Scram Alarm & Scram on Loss of High Voltage to the Reactor Power Level Safety Channels | M |
| f. Fuel Temperature Scram | 2 | 2 | 2 | Automatic Scram Alarm & Scram on indicated fuel temperature of 750°C or less | M |
| g. Watchdog Circuits Scrams | 2 | 2 | 2 | Automatic Scram Alarms & Scrams | M |

| | | | | | |
|---|---|---|---|---|---|
| h. External Scram | 2 | 2 | 2 | Automatic Scram and Alarm if an experiment or radiography scram interlock is activated | M |
| i. One Kilowatt Pulse & Square Wave Interlock | 0 | 1 | 1 | Prevents initiation of a step reactivity insertion above a reactor power level of 1 KW | M |
| j. Low Source Level Rod Withdrawal Prohibit Interlock | 1 | 1 | 1 | Prevents withdrawal of any control rod if the log channel reads less than 1.5 times the indicated log channel current level with the neutron source removed from the core | M |
| k. Control Rod Withdrawal Interlock | 1 | 1 | 1 | Prevents simultaneous withdrawal of two or more rods in manual mode | M |
| l. Magnet Power Key Switch Scram | 1 | 1 | 1 | De-energizes the control rod magnets, scram & alarm | M |

(*) Where: M - channel test monthly

Basis -

a. Table 3.2.3. The console manual scram allows rapid shutdown of the reactor from the control room (SAR Chapter 7, Section 7.1.2.5).

b. Table 3.2.3. The reactor room manual scram allows rapid shutdown of the reactor from the reactor room.

c. Table 3.2.3. The radiography bay manual scrams allow rapid shutdown of the reactor from any of the radiography bays (SAR Chapter 9, Section 9.6.3).

d. Table 3.2.3. The automatic power level safety scram assures the reactor will be shut down if the power level exceeds 2.2 MW, therefore not exceeding the safety limit (SAR Chapter 4, Section 4.7.2).

e. Table 3.2.3. The loss-of-high-voltage scram assures that the reactor power level safety channels operate within their intended range as required for proper functioning of the power level scrams (SAR Chapter 7, Sections 7.1.2.1 & 7.1.2.2).

f. Table 3.2.3. The fuel temperature scrams assure that the reactor will be shut down if the fuel temperature exceeds 750°C, therefore ensuring the safety limit will not be exceeded (SAR Chapter 4, Sections 4.5.4.1 & 4.7.2).

g. Table 3.2.3. The watchdog circuits assure that the control system computer and the data acquisition computer are functioning properly (SAR Chapter 7, Section 7.2).

h. Table 3.2.3. The external scrams assure that the reactor will be shut down if the radiography bay doors and reactor concrete shutters are not in the proper position for personnel entry into the bays (SAR Chapter 9, Section 9.6). External scrams from experiments, a subset of the external scrams, also assure the integrity of the reactor system, the experiment, the facility, and the safety of the facility personnel and the public.

i. Table 3.2.3. The interlock preventing the initiation of a step reactivity insertion at a level above one (1) kilowatt assures that the pulse magnitude will not allow the fuel element temperature to exceed the safety limit (SAR Chapter 7, Section 7.1.2.5).

j. Table 3.2.3. The low source level rod withdrawal prohibit interlock assures an adequate source of neutrons is present for safe startup of the reactor (SAR Chapter 7, Section 7.1.2.5).

k. Table 3.2.3. The control rod withdrawal interlock prevents the simultaneous withdrawal of two or more control rods thus limiting the reactivity-insertion rate from the control rods in manual mode (SAR Chapter 7, Section 7.1.2.5).

l. Table 3.2.3. The magnet current key switch prevents the control rods from being energized without inserting the key. Turning off the magnet current key switch de-energizes the control rod magnets and results in a scram (SAR Chapter 7, Section 7.1.2.5).

### 3.2.4 Reactor Fuel Elements

Applicability - This specification applies to the physical dimensions of the fuel elements as measured on the last surveillance test.

Objective - The objective is to verify the integrity of the fuel-element cladding.

Specification - The reactor shall not be used for normal operation with damaged fuel. All fuel elements shall be inspected visually for damage or deterioration as per Technical Specifications Section 4.2.4. A fuel element shall be considered damaged and must be removed from the core if:

a. In measuring the transverse bend, the bend exceeds 0.125 inch (3.175 mm) over the full length 23 inches (584 mm) of the cladding, or,

b. In measuring the elongation, its length exceeds its initial length by 0.125 inch (3.175 mm), or,

c. A cladding failure exists as indicated by measurable release of fission products, or,

d. Visual inspection identifies bulges, gross pitting, or corrosion.

Basis - The most severe stresses induced in the fuel elements result from pulse operation of the reactor, during which differential expansion between the fuel and the cladding occurs and the pressure of the gases within the elements increases sharply. The above limits on the allowable distortion of a fuel element correspond to strains that are considerably lower than the strain expected to cause rupturing of a fuel element. Limited operation in the steady state or pulsed mode may be necessary to identify a leaking fuel element especially if the leak is small.

## 3.3 Reactor Coolant Systems

Applicability - These specifications apply to the operation of the reactor water measuring systems.

Objective - The objective is to assure that adequate cooling is provided to maintain fuel temperatures below the safety limit, and that the water quality remains high to prevent damage to the reactor fuel.

Specification - The reactor shall not be operated unless the systems and instrumentation channels described in Table 3.3 are operable, and the information is displayed locally or in the control room.

Table 3.3

REQUIRED WATER SYSTEMS AND INSTRUMENTATION

| Measuring Channel/System | Minimum Number Operable | Function: Channel/System | Surveillance Requirements* |
|---|---|---|---|
| a. Primary Coolant Core Inlet Temperature Monitor | 1 | For operation of the reactor at 1.5 MW or higher, alarms on high heat exchanger outlet temperature of 45°C (113°F) | D,Q,A |
| b. Reactor Tank Low Water Monitor | 1 | Alarms if water level drops below a depth of 23 feet in the reactor tank | M |
| c. Purification** Inlet Conductivity Monitor | 1 | Alarms if the primary coolant water conductivity is greater than 5 micromhos/cm | D,M,S |
| d. Emergency Core Cooling System | 1 | For operation of the reactor at 1.5MW or higher, provides water to cool fuel in the event of a Loss of Coolant Accident for a minimum of 3.7 hours at 20 gpm from an appropriate nozzle | D,S |

(*) Where:
D - channel check during each day's operation
A - channel calibration annually
Q - channel test quarterly
S - channel calibration semiannually
M - channel test monthly

(**) The purification inlet conductivity monitor can be out-of-service for no more than 3 hours before the reactor shall be shutdown.

Basis -

a. Table 3.3. The primary coolant core inlet temperature alarm assures that large power fluctuations will not occur (SAR Chapter 4, Section 4.6.2).

b. Table 3.3. The minimum height of 23 ft of water above the reactor tank bottom guarantees that there is sufficient water for effective cooling of the fuel and that the radiation levels at the top of the reactor tank are within acceptable limits. The reactor tank water level monitor alarms if the water level drops below a height of 23 ft (7.01m)above the tank bottom(SAR Chapter 11, Section 11.1.5.1).

c. Table 3.3. Maintaining the primary coolant water conductivity below 5 micromhos/cm averaged over a week will minimize the activation of water impurities and also the corrosion of the reactor structure.

d. Table 3.3. This system will mitigate the Loss of Coolant Accident event analyzed in the SAR Chapter 13, Section 13.2.

3.4 Reactor Room Exhaust System

Applicability - These specifications apply to the operation of the reactor room exhaust system.

Objective - The objectives of this specification are as follows:

a. To reduce concentrations of airborne radioactive material in the reactor room, and maintain the reactor room pressure negative with respect to surrounding areas.

b. To assure continuous air flow through the reactor room in the event of a Loss of Coolant Accident.

Specification -

a. The reactor shall not be operated unless the reactor room exhaust system is in operation and the pressure in the reactor room is negative relative to surrounding areas.

b. The reactor room exhaust system shall be operable within one half hour of the onset of a Loss of Coolant Accident.

Basis - Operation of the reactor room exhaust system assures that:

a. Concentrations of airborne radioactive material in the reactor room and in air leaving the reactor room will be reduced due to mixing with exhaust system air (SAR Chapter 9, Section 9.5.1). Pressure in the reactor room will be negative relative to surrounding areas due to air flow patterns created by the reactor room exhaust system (SAR Chapter 9, Section 6.5.1).

b. There will be a timely, adequate and continuous air flow through the reactor room to keep the fuel temperature below the safety limit in the event of a Loss of Coolant Accident.

3.5 This section intentionally left blank.

3.6 This section intentionally left blank.

3.7 Reactor Radiation Monitoring Systems

3.7.1 Monitoring Systems

Applicability - This specification applies to the information which shall be available to the reactor operator during reactor operation.

Objective - The objective is to require that sufficient information regarding radiation levels and radioactive effluents is available to the reactor operator to assure safe operation of the reactor.

Specification - The reactor shall not be operated unless the channels described in Table 3.7.1 are operable, the readings are below the alarm setpoints, and the information is displayed in the control room. The stack and reactor room CAMS shall not be shutdown at the same time during reactor operation.

Table 3.7.1

REQUIRED RADIATION MONITORING INSTRUMENTATION

| Measuring Equipment | Minimum Number Operable** | Channel Function | Surveillance Requirements* |
|---|---|---|---|
| a. Facility Stack Monitor | 1 | Monitors Argon-41 and radioactive particulates, and alarms | D,W,A |
| b. Reactor Room Radiation Monitor | 1 | Monitors the radiation level in the reactor room and alarms | D,W,A |
| c. Purification System Radiation Monitor | 1 | Monitors radiation level at the demineralizer station and alarms | D,W,A |

| | | | |
|---|---|---|---|
| d. Reactor Room Continuous Air Monitor | 1 | Monitors air from the reactor room for particulate and gaseous radioactivity and alarms | D,W,A |

(*) Where: D - channel check during each day's operation
A - channel calibration annually
W - channel test

(**) monitors may be placed out-of-service for up to 2 hours for calibration and maintenance. During this out-of-service time, no experiment or maintenance activities shall be conducted which could result in alarm conditions (e.g., airborne releases or high radiation levels)

Basis -

a. Table 3.7.1. The facility stack monitor provides information to operating personnel regarding the release of radioactive material to the environment (SAR Chapter 11, Section 11.1.1.1.4). The alarm setpoint on the facility stack monitor is set to limit Argon-41 concentrations to less than 10 CFR Part 20, Appendix B, Table 2, Column 1 values (averaged over one year) for unrestricted locations outside the operations area.

b. Table 3.7.1. The reactor room radiation monitor provides information regarding radiation levels in the reactor room during reactor operation (SAR Chapter 11, Section 11.1.5.1), to limit occupational radiation exposure to less than 10 CFR 20 limits.

c. Table 3.7.1. The radiation monitor located next to the purification system resin cannisters provides information regarding radioactivity in the primary system cooling water (SAR Chapter 11, Section 11.1.5.4.2) and allows assessment of radiation levels in the area to ensure that personnel radiation doses will be below 10 CFR Part 20 limits.

d. Table 3.7.1. The reactor room continuous air monitor provides information regarding airborne radioactivity in the reactor room, (SAR Chapter 11, Sections 11.1.1.1.2 & 11.1.1.1.5), to ensure that occupational exposure to airborne radioactivity will remain below the 10 CFR Part 20 limits.

### 3.7.2 Effluents - Argon-41 Discharge Limit

Applicability - This specification applies to the concentration of Argon-41 that may be discharged from the UCD/MNRC reactor facility.

Objective - The objective is to ensure that the health and safety of the public is not endangered by the discharge of Argon-41 from the UCD/MNRC reactor facility.

Specification - The annual average unrestricted area concentration of Argon-41 due to releases of this radionuclide from the UCD/MNRC, and the corresponding annual radiation dose from Argon-41 in the unrestricted area shall not exceed the applicable levels in 10 CFR Part 20.

Basis - The annual average concentration limit for Argon-41 in air in the unrestricted area is specified in Appendix B, Table 2, Column 1 of 10 CFR Part 20. 10 CFR 20.1301 specifies dose limitations in the unrestricted area. 10 CFR 20.1101 specifies a constraint on air emissions of radioactive material to the environment. The SAR Chapter 11, Section 11.1.1.1.4 estimates that the routine Argon-41 releases and the corresponding doses in the unrestricted area will be below these limits.

## 3.8 Experiments

### 3.8.1 Reactivity Limits.

Applicability - This specification applies to the reactivity limits on experiments installed in specific reactor experiment facilities.

Objective - The objective is to assure control of the reactor during the irradiation or handling of experiments in the specifically designated reactor experiment facilities.

Specification - The reactor shall not be operated unless the following conditions governing experiments exist:

a. The absolute reactivity worth of any single moveable experiment in the pneumatic transfer tube, the central irradiation facility, the central irradiation fixture 1 (CIF-1), or any other in-core or in-tank irradiation facility, shall be less than $1.00 (0.7% $\Delta k/k$), except for the automated central irradiation facility (ACIF) (See 3.8.1.c below).

b. The absolute reactivity worth of any single secured experiment positioned in a reactor in-core or in-tank irradiation facility shall be less than the maximum allowed pulse ($1.75) (1.23% $\Delta k/k$).

c. The absolute total reactivity worth of any single experiment or of all experiments collectively positioned in the ACIF shall be less than the maximum allowed pulse ($1.75) (1.23% $\Delta k/k$).

d. The absolute total reactivity of all experiments positioned in the pneumatic transfer tube, and in any other reactor in-core and in-tank irradiation facilities at any given time shall be less than one dollar and ninety-two cents ($1.92) (1.34% $\Delta k/k$), including the potential reactivity which might result from malfunction, flooding, voiding, or removal and insertion of the experiments.

Basis -

a. A limitation of less than one dollar ($1.00) (0.7% $\Delta k/k$) on the reactivity worth of a single movable experiment positioned in the pneumatic transfer tube, the central irradiation facility (SAR, Chapter 10, Section 10.4.1), the central irradiation fixture-1 (CIF-1) (SAR Chapter 10, Section 10.4.1), or any other in-core or in-tank irradiation facility, will assure that the pulse limit of $1.75 is not exceeded (SAR Chapter 13, Section 13.2.2.2.1). In addition, limiting the worth of each movable experiment to less than $1.00 will assure that the additional increase in transient power and temperature will be slow enough so that the fuel temperature scram will be effective (SAR Chapter 13, Section 13.2.2.2.1).

b. The absolute worst event which may be considered in conjunction with a single secured experiment is its sudden accidental or unplanned removal while the reactor is operating. For such an event, the reactivity limit for fixed experiments ($1.75) would result in a reactivity increase less than the $1.92 pulse reactivity insertion needed to reach the fuel temperature safety limit (SAR Chapter 13, Section 13.2.2.2.1).

c. A reactivity limit of less than $1.75 for any single experiment or for all experiments collectively positioned in the sample can of the automated central irradiation facility (ACIF) (SAR Chapter 10, Section 10.4.2) is based on the pulsing reactivity insertion limit (Technical Specification 3.1.2) (SAR Chapter 13, Section 13.2.2.2.1) and on the design of the ACIF, which allows control over the positioning of samples into and out of the central core region in a manner identical in form, fit, and function to a control rod.

d. It is conservatively assumed that simultaneous removal of all experiments positioned in the pneumatic transfer tube, and in any other reactor in-core and in-tank irradiation facilities at any given time shall be less than the maximum reactivity insertion limit of $1.92. The SAR Chapter 13, Section 13.2.2.2.1 indicates that a pulse reactivity insertion of $1.92 would be needed to reach the fuel temperature safety limit.

3.8.2 Materials Limit

Applicability - This specification applies to experiments installed in reactor experiment facilities.

Objective - The objective is to prevent damage to the reactor or significant releases of radioactivity by limiting material quantity and the radioactive material inventory of the experiment.

Specification - The reactor shall not be operated unless the following conditions governing experiment materials exist:

a. Experiments containing materials corrosive to reactor components, compounds highly reactive with water, potentially explosive materials, and liquid fissionable materials shall be appropriately encapsulated.

b. Each fueled experiment shall be controlled such that the total inventory of iodine isotopes 131 through 135 in the experiment is no greater than 1.5 curies and the maximum strontium inventory is no greater than 5 millicuries.

c. Each experiment in the I-125 production facility shall be controlled such that the total inventory of I-125 dispensed or stored in the reactor room glove box shall not exceed 20 curies.

d. Each experiment in the I-125 production facility shall be controlled such that the total inventory of I-125 being processed at any one time in the reactor room fume hood shall not exceed 200 millicuries. An additional 800 millicuries of I-125 in sealed storage containers may also be present in the reactor room fume hood.

e. Explosive materials in quantities greater than 25 milligrams of TNT equivalent shall not be irradiated in the reactor tank. Explosive materials in quantities of 25 milligrams of TNT equivalent or less may be irradiated provided the pressure produced upon detonation of the explosive has been calculated and/or experimentally demonstrated to be less than the design pressure of the container.

f. Explosive materials in quantities of three (3) pounds TNT equivalent or less may be irradiated in any radiography bay. The irradiation of explosives in any bay is limited to those assemblies where a safety analysis has been performed that shows that there is no damage to the reactor safety systems upon detonation (SAR Chapter 13, Section 13.2.6.2).

Basis -

a. Appropriate encapsulation is required to lessen the experimental hazards of some types of materials.

b. The 1.5 curies limitation on iodine 131 through 135 assures that in the event of failure of a fueled experiment leading to total release of the iodine, occupational doses and doses to members of the general public in the unrestricted areas shall be within the limits in 10 CFR 20 (SAR Chapter 13, Section 13.2.6.2).

c&d. Limiting the total I-125 inventory to twenty (20.0) curies in the reactor room glove box and to one (1.0) curie in the reactor room fume hood assures that, if these inventories of I-125 are totally released into their respective containments, occupational doses and doses to members of the general public in the unrestricted areas shall be within the limits of 10 CFR 20 (SAR Chapter 13, Section 13.2.6.2).

e. This specification is intended to prevent damage to vital equipment by restricting the quantity of explosive materials within the reactor tank (SAR Chapter 13, Section 13.2.6.2).

f. The failure of an experiment involving the irradiation of 3 lbs TNT equivalent or less in any radiography bay external to the reactor tank will not result in damage to the reactor controls or the reactor tank. Safety Analyses have been performed (SAR Chapter 13, Section 13.2.6.2) which show that up to six (6) pounds of TNT equivalent can be safely irradiated in any radiogaphy bay. Therefore, the three (3) pound limit gives a safety margin of two (2).

3.8.3 Failure and Malfunctions

Applicability - This specification applies to experiments installed in reactor experiment facilities.

Objective - The objective is to prevent damage to the reactor or significant releases of radioactive materials in the event of an experiment failure.

Specification -

a. All experiment materials which could off-gas, sublime, volatilize, or produce aerosols under:

(1) normal operating conditions of the experiment or the reactor,

(2) credible accident conditions in the reactor, or

(3) where the possibility exists that the failure of an experiment could release radioactive gases or aerosols into the reactor building or into the unrestricted area, the quantity and type of material in the experiment shall be limited such that the airborne radioactivity in the reactor room or the unrestricted area will not result in exceeding the applicable dose limits in 10 CFR Part 20, assuming 100% of the gases or aerosols escapes.

b. In calculations pursuant to (a) above, the following assumptions shall be used:

(1) If the effluent from an experiment facility exhausts through a stack which is closed on high radiation levels, at least 10% of the gaseous activity or aerosols produced will escape.

(2) If the effluent from an experiment facility exhausts through a filter installation designed for greater than 99% efficiency for 0.3 micron and larger particles, at least 10% of these will escape.

(3) For materials whose boiling point is above 130°C and where vapors formed by boiling this material can escape only through an undistributed column of water above the core, at least 10% of these vapors can escape.

c. If a capsule fails and releases material which could damage the reactor fuel or structure by corrosion or other means, an evaluation shall be made to determine the need for corrective action. Inspection and any corrective action taken shall be reviewed by the UCD/MNRC Director or his designated alternate and determined to be satisfactory before operation of the reactor is resumed.

Basis -

a. This specification is intended to reduce the likelihood that airborne radioactivity in the reactor room or the unrestricted area will result in exceeding the applicable dose limits in 10 CFR Part 20.

b. These assumptions are used to evaluate the potential airborne radioactivity release due to an experiment failure (SAR Chapter 13, Section 13.2.6.2).

c. Normal operation of the reactor with damaged reactor fuel or structural damage is prohibited to avoid release of fission products. Potential damage to reactor fuel or structure shall be brought to the attention of the UCD/MNRC Director or his designated alternate for review to assure safe operation of the reactor (SAR Chapter 13, Section 13.2.6.2).

## 4.0 Surveillance Requirements

General. The surveillance frequencies denoted herein are based on continuing operation of the reactor. Surveillance activities scheduled to occur during an operating cycle which can not be performed with the reactor operating may be deferred to the end of the operating cycle. If the reactor is not operated for a reasonable time, a reactor system or measuring channel surveillance requirement may be waived during the associated time period. Prior to reactor system or measuring channel operation, the surveillance shall be performed for each reactor system or measuring channel for which surveillance was waived. A reactor system or measuring channel shall not be considered operable until it is successfully tested.

### 4.1 Reactor Core Parameters

#### 4.1.1 Steady State Operation

Applicability - This specification applies to the surveillance requirement for the power level monitoring channels.

Objective - The objective is to verify that the maximum power level of the reactor does not exceed the authorized limit.

Specification - An annual channel calibration shall be made of the power level monitoring channel. If a channel is removed, replaced, or unscheduled maintenance is performed, or a significant change in core configuration occurs, a channel calibration shall be required. Discovery of noncompliance with this specification shall limit reactor operations to that required to perform the surveillance.

Basis - The annual power level channel calibration will assure that the indicated reactor power level is correct.

#### 4.1.2 Shutdown Margin and Excess Reactivity

Applicability - These specifications apply to the surveillance requirements for reactivity control of the reactor core.

Objective - The objective is to measure and verify the reactivity worth, performance, and operability of those systems affecting the reactivity of the reactor.

Specification -

a. The total reactivity worth of each control rod and the shutdown margin shall be determined annually or following any significant change in core or control rod configuration. The shutdown margin shall be verified by meeting the requirements of Section 3.1.3(a).

b. The core excess reactivity shall be verified:

(1) Prior to each startup operation and,

(2) Following any change in core loading or configuration.

Discovery of noncompliance with Technical Specifications 4.1.2.a-b shall limit reactor operations to that required to perform the surveillance.

Basis -

a. The reactivity worth of the control rods is measured to assure that the required shutdown margin is available and to provide an accurate means for determining the excess reactivity of the core. Past experience with similar reactors gives assurance that measurements of the control rod reactivity worth on an annual basis is adequate to assure that there are no significant changes in the shutdown margin, provided no core loading or configuration changes have been made.

b. Determining the core excess reactivity prior to each reactor startup shall assure that Technical Specifications 3.1.3.b shall be met, and that the critical rod positions do not change unexpectedly.

## 4.2 Reactor Control and Safety Systems

### 4.2.1 Control Rods

Applicability - This specification applies to the surveillance of the control rods.

Objective - The objective is to inspect the physical condition of the reactor control rods and establish the operable condition of the rods.

Specification - Control rod worths shall be determined annually or after physical removal or any significant change in core or control rod configuration.

a. Each control rod shall be inspected at annual intervals by visual observation of the fueled sections and absorber sections plus examination of the linkages and drives.

b. The scram time of each control rod shall be measured semiannually.

Discovery of noncompliance with Technical Specifications 4.2.1.a-b shall limit reactor operations to that required to perform the surveillance.

Basis (Technical Specifications 4.2.1.a-b) - Annual determination of control rod worths or measurements after any physical removal or significant change in core loading or control rod configuration provides information about changes in reactor total reactivity and individual rod worths. The frequency of inspection for the control rods shall provide periodic verification of the condition of the control rod assemblies. The specification intervals for scram time assure operable performance of the control rods.

4.2.2 Reactor Instrumentation

Applicability - These specifications apply to the surveillance requirements for measurements, tests, calibration and acceptability of the reactor instrumentation.

Objective - The objective is to ensure that the power level instrumentation and the fuel temperature instrumentation are operable.

Specification -

a. The reactor power level safety channels shall have the following:

(1) A channel test monthly or after any maintenance which could affect their operation.

(2) A channel check during each day's operation.

(3) A channel calibration annually.

b. The Linear Power Channel shall have the following:

(1) A channel test monthly or after any maintenance which could affect the operation.

(2) A channel check during each day's operation.

(3) A channel calibration annually.

c. The Log Power Channel shall have the following:

(1) A channel test monthly or after any maintenance which could affect its operation.

(2) A channel check during each day's operation.

(3) A channel calibration annually.

d. The fuel temperature measuring channels shall have the following:

(1) A channel test monthly or after any maintenance which could affect operation.

(2) A channel check during each day's operation.

(3) A channel calibration annually.

e. The Pulse Energy Integrating Channel shall have the following:

(1) A channel test prior to pulsing operations.

(2) A channel calibration annually.

Discovery of noncompliance with Technical Specifications 4.2.2.a-e shall limit reactor operation to that required to perform the surveillance.

Basis -

a. A daily channel check and monthly test, plus the annual calibration, will assure that the reactor power level safety channels operate properly.

b. A channel test monthly of the reactor power level multi-range channel will assure that the channel is operable and responds correctly. The channel check will assure that the reactor power level multi-range linear channel is operable on a daily basis. The

channel calibration annually of the multi-range linear channel will assure that the reactor power will be accurately measured so the authorized power levels are not exceeded.

c. A channel test monthly will assure that the reactor power level wide range log channel is operable and responds correctly. A channel check of the reactor power level wide range log channel will assure that the channel is operable on a daily basis. A channel calibration will assure that the channel will indicate properly at the corresponding power levels.

d. A channel test monthly and check during each day's operation, plus the annual calibration, will assure that the fuel temperature measuring channels operate properly.

e. A channel test prior to pulsing plus the annual channel calibration will assure the pulse energy integrating channel operates properly.

4.2.3 Reactor Scrams and Interlocks

Applicability - These specifications apply to the surveillance requirements for measurements, test, calibration, and acceptability of the reactor scrams and interlocks.

Objective - The objective is to ensure that the reactor scrams and interlocks are operable.

Specification -

a. Console Manual Scram. A channel test shall be performed monthly.

b. Reactor Room Manual Scram. A channel test shall be performed monthly.

c. Radiography Bay Manual Scrams. A channel test shall be performed monthly.

d. Reactor Power Level Safety Scram. A channel test shall be performed monthly.

e. High-Voltage-Power Supply Scrams. A channel test shall be performed monthly.

f. Fuel Temperature Scram. A channel test shall be performed monthly.

g. Watchdog Circuits Scrams. A channel test shall be performed monthly.

h. External Scrams. A channel test shall be performed monthly.

i. The One Kilowatt Pulse Interlock. A channel test shall be performed monthly.

j. Low Source Level Rod Withdrawal Prohibit Interlock. A channel test shall be performed monthly.

k. Control Rod Withdrawal Interlocks. A channel test shall be performed monthly.

l. Magnet Power Key Switch Scram. A channel test shall be performed monthly.

Discovery of noncompliance with Specifications 4.2.3.a-l shall limit reactor operation to that required to perform the surveillance.

Basis -

a. A channel test monthly of the Console Manual Scram will assure that the scram is operable.

b. A channel test monthly of the Reactor Room Manual Scram will assure that the scram is operable.

c. A channel test monthly of the Radiography Bay Manual Scrams will assure that the scrams are operable.

d. A channel test monthly of the Reactor Power Level Safety Scrams will assure that the scrams are operable.

e. A channel test monthly of the Loss-of-High-Voltage Scram will assure that the high voltage power supplies are operable and respond correctly.

f. A channel test monthly of the Fuel Temperature Scrams will assure that the scrams are operable.

g. A channel test monthly of the Watchdog Circuits Scrams will assure that the scram circuits are operable.

h. A channel test monthly of the External Scrams will assure that the scrams are operable and respond correctly.

i. A channel test monthly will assure that the One Kilowatt Pulse Interlock works properly.

j. A channel test monthly of the Low Source Level Rod Withdrawal Prohibit Interlock will assure that the interlock is operable.

k. A channel test monthly of the Control Rod Withdrawal Interlock will assure that the interlock is operable.

l. A channel test monthly of the Magnet Current Key Switch will assure that the scram is operable.

4.2.4 Reactor Fuel Elements

Applicability - This specification applies to the surveillance requirements for the fuel elements.

Objective - The objective is to verify the continuing integrity of the fuel element cladding.

Specification - To assure the measurement limitations in Section 3.2.4 are met, the following shall be done:

a. The lead elements (i.e., all elements adjacent to the transient rod, with the exception of instrumented fuel elements), and all elements adjacent to the central irradiation facility shall be inspected annually.

b. Instrumented fuel elements shall be inspected if any of the elements adjacent to it fail to pass the visual and/or physical measurement requirements of Section 3.2.4. Discovery of noncompliance with Technical Specification 4.2.4 shall limit operations to that required to perform the surveillance.

Basis (Technical Specifications 4.2.4.a-b) - The above specifications assure that the lead fuel elements shall be inspected regularly and the integrity of the lead fuel elements shall be maintained. These are the fuel elements with the highest power density as analyzed in the SAR Chapter 4, Section 4.5.5.6. The instrumented fuel element is excluded to reduce the risk of damage to the thermocouples.

4.3 Reactor Coolant Systems

Applicability - This specification applies to the surveillance requirements for the reactor water measuring systems and the emergency core cooling system.

Objective - The objective is to assure that the reactor tank water temperature monitoring system, the tank water level alarm, the

water conductivity cells and the emergency core cooling system are all operable.

Specification -

a. The reactor tank core inlet temperature monitor shall have the following:

(1) A channel check during each day's operation.

(2) A channel test quarterly.

(3) A channel calibration annually.

b. The reactor tank low water level monitoring system shall have the following:

(1) A channel test monthly.

c. The purification inlet conductivity monitors shall have the following:

(1) A channel check during each day's operation.

(2) A channel test monthly.

(3) A channel calibration semiannually.

d. The Emergency Core Cooling System shall have the following:

(1) A channel check prior to operation.

(2) A channel calibration semiannually.

Discovery of noncompliance with Technical Specifications 4.3.a-c shall limit operations to that required to perform the surveillance. Noncompliance with Technical Specification 4.3.d shall limit operations to less than 1.5 MW.

Basis -

a. A channel test quarterly assures the water temperature monitoring system responds correctly to an input signal. A channel check during each day's operation assures the channel is operable. A channel calibration annually assures the monitoring system reads properly.

b. A channel test monthly assures that the low water level monitoring system responds correctly to an input signal.

c. A channel test monthly assures that the purification inlet conductivity monitors respond correctly to an input signal. A channel check during each day's operation assures that the channel is operable. A channel calibration semiannually assures the conductivity monitoring system reads properly.

d. A channel check prior to operation assures that the emergency core cooling system is operable for power levels above 1.5 MW. A channel calibration semiannually assures that the Emergency Core Cooling System performs as required for power levels above 1.5 MW.

4.4 Reactor Room Exhaust System

Applicability - This specification applies to the surveillance requirements for the reactor room exhaust system.

Objective - The objective is to assure that the reactor room exhaust system is operating properly.

Specification - The reactor room exhaust system shall have a channel check during each day's operation.

Discovery of noncompliance with this specification shall limit operations to that required to perform the surveillance.

Basis - A channel check during each day's operation of the reactor room exhaust system shall verify that the exhaust system is maintaining a negative pressure in the reactor room relative to the surrounding facility areas.

4.5 This section intentionally left blank.

4.6 This section intentionally left blank.

4.7 Reactor Radiation Monitoring Systems

Applicability - This specification applies to the surveillance requirements for the reactor radiation monitoring systems.

Objective - The objective is to assure that the radiation monitoring equipment is operating properly.

Specification -

a. The facility stack monitor shall have the following:

(1) A channel check during each day's operation.

(2) A channel test weekly.

(3) A channel calibration annually.

b. The reactor room radiation monitor shall have the following:

(1) A channel check during each day's operation.

(2) A channel test weekly.

(3) A channel calibration annually.

c. The purification system radiation monitor shall have the following:

(1) A channel check during each day's operation.

(2) A channel test weekly.

(3) A channel calibration annually.

d. The reactor room Continuous Air Monitor (CAM) shall have the following:

(1) A channel check during each day's operation.

(2) A channel test weekly.

(3) A channel calibration annually.

Discovery of noncompliance with Technical Specifications 4.7.a-d shall limit operations to that required to perform the surveillance.

Basis -

a. A channel check of the facility stack monitor system during each day's operation will assure the monitor is operable. A channel test weekly will assure that the system responds correctly to a known source. A channel calibration annually will assure that the monitor reads correctly.

b. A channel check of the reactor room radiation monitor during each day's operation will assure that the monitor is operable. A channel test weekly will ensure that the system responds to a known source. A channel calibration of the monitor annually will assure that the monitor reads correctly.

c. A channel check of the purification system radiation monitor during each day's operation assures that the monitor is operable. A

channel test weekly will ensure that the system responds to a known source. A channel calibration of the monitor annually will assure that the monitor reads correctly.

d. A channel check of the reactor room Continuous Air Monitor (CAM) during each day's operation will assure that the CAM is operable. A channel test weekly will assure that the CAM responds correctly to a known source. A channel calibration annually will assure that the CAM reads correctly.

4.8 Experiments

Applicability - This specification applies to the surveillance requirements for experiments installed in any UCD/MNRC reactor experiment facility.

Objective - The objective is to prevent the conduct of experiments or irradiations which may damage the reactor or release excessive amounts of radioactive materials as a result of experiment failure.

Specification -

a. A new experiment shall not be installed in any UCD/MNRC reactor experiment facility until a written safety analysis has been performed and reviewed by the UCD/MNRC Director, or his designee, to establish compliance with the Limitations on Experiments, (Technical Specifications Section 3.8) and 10 CFR 50.59.

b. All experiments performed at the UCD/MNRC shall meet the conditions of an approved Facility Use Authorization. Facility Use Authorizations and experiments carried out under these authorizations shall be reviewed and approved in accordance with the Utilization of the (UCD) McClellan Nuclear Radiation Center Research Reactor Facility Document (MNRC-0027-DOC). An experiment classified as an approved experiment shall not be placed in any UCD/MNRC experiment facility until it has been reviewed for compliance with the approved experiment and Facility Use Authorization by the Reactor Manager and the Health Physics Manager, or their designated alternates.

c. The reactivity worth of any experiment installed in the pneumatic transfer tube, or in any other UCD/MNRC reactor in-core or in-tank irradiation facility shall be estimated or measured, as appropriate, before reactor operation with said experiment. Whenever a measurement is done it shall be done at ambient conditions.

d. Experiments shall be identified and a log or other record maintained while experiments are in any UCD/MNRC reactor experiment facility.

Basis -

a & b. Experience at most TRIGA reactor facilities verifies the importance of reactor staff and safety committee reviews of proposed experiments.

c. Measurement of the reactivity worth of an experiment, or estimation of the reactivity worth based on previous or similar measurements, shall verify that the experiment is within authorized reactivity limits.

d. Maintaining a log of experiments while in UCD/MNRC reactor experiment facilities will facilitate maintaining surveillance over such experiments.

## 5.0 Design Features

### 5.1 Site and Facility Description.

#### 5.1.1 Site

Applicability - This specification applies to the UCD/MNRC site location and specific facility design features.

Objective - The objective is to specify those features related to the Safety Analysis evaluation.

Specification -

a. The site location is situated approximately 8 miles (13 km) north-by-northeast of downtown Sacramento, California. The site of the UCD/MNRC facility is about 3000 ft (0.6 mi or 0.9 km) west of Watt Avenue, and 4500 ft (0.9 mi or 1.4 km) south of E Street.

b. The restricted area is that area inside the fence surrounding the reactor building. The unrestricted area is that area outside the fence surrounding the reactor building.

c. The TRIGA reactor is located in Building 258, Room 201 of the UCD/McClellan Nuclear Radiation Center. This building has been designed with special safety features.

d. The core is below ground level in a water filled tank and surrounded by a concrete shield.

Basis -

a. Information on the surrounding population, the hydrology, seismology, and climatography of the site has been presented in Chapter 2 of the Safety Analysis Report.

b. The restricted area is controlled by the UCD/MNRC Director.

c. The room enclosing the reactor has been designed with systems related to the safe operation of the facility.

d. The below grade core design is to negate the consequences of an aircraft hitting the reactor building. This accident was analyzed in Chapter 13 of the Safety Analysis Report, and found to be beyond a credible accident scenario.

5.1.2 Facility Exhaust

Applicability - This specification applies to the facility which houses the reactor.

Objective - The objective is to assure that provisions are made to restrict the amount of radioactivity released into the environment, or during a Loss of Coolant Accident, the system is to assure proper removal of heat from the reactor room.

Specification -

a. The UCD/MNRC reactor facility shall be equipped with a system designed to filter and exhaust air from the UCD/MNRC facility. The system shall have an exhaust stack height of a minimum of 18.2m (60 feet) above ground level.

b. Manually activated shutdown controls for the exhaust system shall be located in the reactor control room.

Basis - The UCD/MNRC facility exhaust system is designed such that the reactor room shall be maintained at a negative pressure with respect to the surrounding areas. The free air volume within the UCD/MNRC facility is confined to the facility when there is a shutdown of the exhaust system. Controls for startup, filtering, and normal operation of the exhaust system are located in the reactor control room. Proper handling of airborne radioactive materials (in emergency situations) can be conducted from the reactor control room with a minimum of exposure to operating personnel.

## 5.2 Reactor Coolant System

Applicability - This specification applies to the reactor coolant system.

Objective - The objective is to assure that adequate water is available for cooling and shielding during normal reactor operation or during a Loss of Coolant Accident.

Specification -

a. During normal reactor operation the reactor core shall be cooled by a natural convection flow of water.

b. The reactor tank water level alarm shall activate if the water level in the reactor tank drops below a depth of 23 ft.

c. For operations at 1.5 MW or higher during a Loss of Coolant Accident the reactor core shall be cooled for a minimum of 3.7 hours at 20 gpm by a source of water from the Emergency Core Cooling System.

Basis -

a. The SAR Chapter 4, Section 4.6, Table 4-19, shows that fuel temperature limit of 930°C will not be exceeded under natural convection flow conditions.

b. A reactor tank water low level alarm sounds when the water level drops significantly. This alarm annunciates in the reactor control room and at a 24 hour monitored location so that appropriate corrective action can be taken to restore water for cooling and shielding.

c. The SAR Chapter 13, Section 13.2, analyzes the requirements for cooling of the reactor fuel and shows that the fuel safety limit is not exceeded under Loss of Coolant Accident conditions during this water cooling.

## 5.3 Reactor Core and Fuel

### 5.3.1 Reactor Core

Applicability - This specification applies to the configuration of the fuel.

Objective - The objective is to assure that provisions are made to restrict the arrangement of fuel elements so as to provide assurance that excessive power densities will not be produced.

Specification - For operation at 0.5 MW or greater, the reactor core shall be an arrangement of 96 or more fuel elements to include fuel followed control rods. Below 0.5 MW there is no minimum required number of fuel elements. In a mixed 20/20, 30/20 and 8.5/20 fuel loading (SAR Chapter 4, Section 4.5.5.6):

Mix J Core and Other Variations

(1) No fuel shall be loaded into Hex Rings A or B.

(2) A fuel followed control rod located in an 8.5 wt% environment shall contain 8.5 wt% fuel.

20E Core and Other Variations

(1) No fuel shall be loaded into Hex Rings A or B.

(2) Fuel followed control rods may contain either 8.5 wt% or 20 wt% fuel.

(3) Variations to the 20E core having 20 wt% fuel in Hex Ring C requires the 20 wt% fuel to be loaded into corner positions only and graphite dummy elements in the flat positions. The performance of fuel temperature measurements shall apply to variations to the as-analyzed 20E core configurations.

30B Core and Other Variations

(1) No fuel shall be loaded into Hex Rings A or B.

(2) The only fuel types allowed are 20/20 and 30/20.

(3) 20/20 fuel may be used in any position in Hex Rings C through G.

(4) 30/20 fuel may be used in any position in Hex Rings D through G but not in Hex Ring C.

(5) An analysis of any irradiation facility installed in the central cavity of this core shall be done before it is used with this core.

Basis - In order to meet the power density requirements discussed in the SAR Chapter 4, Section 4.5.5.6, no less than 96 fuel elements including fuel followed control rods and the above loading restrictions will be allowed in an operational 0.5 MW or greater core. Specifications for the 20E core and for the 30B core allow for variations of the as-analyzed core with the condition that

temperature limits are being maintained (SAR Chapter 4, Section 4.5.5.6 and Argonne National Laboratory Report ANL/ED 97-54).

### 5.3.2 Reactor Fuel

Applicability - These specifications apply to the fuel elements used in the reactor core.

Objective - The objective is to assure that the fuel elements are of such design and fabricated in such a manner as to permit their use with a high degree of reliability with respect to their physical and nuclear characteristics.

Specification - The individual unirradiated TRIGA fuel elements shall have the following characteristics:

a. Uranium content: 8.5, 20 or 30 wt % uranium enriched nominally to less than 20% U-235.

b. Hydrogen to zirconium atom ratio (in the $ZrH_x$): 1.60 to 1.70 (1.65+/- 0.05).

c. Cladding: stainless steel, nominal 0.5mm (0.020 inch) thick.

Basis -

a. The design basis of a TRIGA core loaded with TRIGA fuel demonstrates that limiting operation to 2.3 megawatts steady state or to a 36 megawatt-sec pulse assures an ample margin of safety between the maximum temperature generated in the fuel and the safety limit for fuel temperature. The fuel temperatures are not expected to exceed 630°C during any condition of normal operation.

b. Analysis shows that the stress in a TRIGA fuel element, H/Zr ratios between 1.6 and 1.7, is equal to the clad yield strength when both fuel and cladding temperature are at the safety limit 930°C. Since the fuel temperatures are not expected to exceed 630°C during any condition of normal operation, there is a margin between the fuel element clad stress and its ultimate strength.

c. Safety margins in the fuel element design and fabrication allow for normal mill tolerances of purchased materials.

### 5.3.3 Control Rods and Control-Rod Drives

Applicability - This specification applies to the control rods and control rod drives used in the reactor core.

Objective - The objective is to assure the control rods and control rod drives are of such a design as to permit their use with a high degree of reliability with respect to their physical, nuclear, and mechanical characteristics.

Specification -

a. All control rods shall have scram capability and contain a neutron poison such as stainless steel, borated graphite, $B_4C$ powder, or boron and its compounds in solid form. The shim and regulating rods shall have fuel followers sealed in stainless steel. The transient rod shall have an air filled follower and be sealed in an aluminum tube.

b. The control rod drives shall be the standard GA rack and pinion type with an electromagnet and armature attached.

Basis -

a. The neutron poison requirements for the control rods are satisfied by using stainless steel, neutron absorbing borated graphite, $B_4C$ powder, or boron and its compounds. These materials shall be contained in a suitable clad material such as stainless steel or aluminum to assure mechanical stability during movement and to isolate the neutron poison from the tank water environment. Scram capabilities are provided for rapid insertion of the control rods.

b. The standard GA TRIGA control rod drive meets the requirements for driving the control rods at the proper speeds, and the electromagnet and armature provide the requirements for rapid insertion capability. These drives have been tested and proven in many TRIGA reactors.

5.4 Fissionable Material Storage

Applicability - This specification applies to the storage of reactor fuel at a time when it is not in the reactor core.

Objective - The objective is to assure that the fuel which is being stored will not become critical and will not reach an unsafe temperature.

Specification -

a. All fuel elements not in the reactor core shall be stored (wet or dry) in a geometrical array where the $k_{eff}$ is less than 0.9 for all conditions of moderation.

b. Irradiated fuel elements shall be stored in an array which shall permit sufficient natural convection cooling by water or air such that the fuel element temperature shall not exceed the safety limit.

Basis - The limits imposed by Technical Specifications 5.4.a and 5.4.b assure safe storage.

## 6.0 Administrative Controls

6.1 Organization. The Vice Chancellor for Research shall be the licensee for the UCD/MNRC. The UCD/MNRC facility shall be under the direct control of the UCD/MNRC Director or a licensed senior reactor operator (SRO) designated by the UCD/ MNRC Director to be in direct control. The UCD/MNRC Director shall be accountable to the Vice Chancellor of the Office of Research for the safe operation and maintenance of the reactor and its associated equipment.

6.1.1 Structure. The management for operation of the UCD/MNRC facility shall consist of the organizational structure as shown in Figure 6.1.

6.1.2 Responsibilities. The UCD/MNRC Director shall be accountable to the Vice Chancellor of the Office of Research for the safe operation and maintenance of the reactor and its associated equipment. The UCD/MNRC Director or his designated alternate shall review and approve all experiments and experiment procedures prior to their use in the reactor. Individuals in the management organization (e.g., reactor manager, health physics manager, etc.) shall be responsible for implementing UCD/MNRC policies and for operation of the facility, and shall be responsible for safeguarding the public and facility personnel from undue radiation exposures and for adhering to the operating license and technical specifications. The reactor manager and health physics manager report directly to the UCD/MNRC Director.

6.1.3 Staffing

6.1.3.1 The minimum staffing when the reactor is not shutdown shall be:

a. A reactor operator in the control room;

b. A second person in the facility area who can perform prescribed instructions;

c. A senior reactor operator readily available. The available senior reactor operator should be within thirty (30) minutes of the facility and reachable by telephone, and;

d. A senior reactor operator shall be present whenever a reactor startup is performed, fuel is being moved, or experiments are being placed in the reactor tank.

6.1.3.2 A list of reactor facility personnel by name and telephone number shall be available to the reactor operator in the control room. The list shall include:

a. Management personnel.

b. Health Physics personnel.

c. Reactor Operations personnel.

6.1.4 Selection and Training of Personnel. The selection, training and requalification of operations personnel shall meet or exceed the requirements of the American National Standard for Selection and Training of Personnel for Research Reactors (ANS 15.4). Qualification and requalification of licensed operators shall be subject to an approved Nuclear Regulatory Commission (NRC) program.

6.2 Review, Audit, Recommendation and Approval

General Policy. Nuclear facilities shall be designed, constructed, operated, and maintained in such a manner that facility personnel, the general public, and both university and non-university property are not exposed to undue risk. These activities shall be conducted in accordance with applicable regulatory requirements.

The UCD Vice Chancellor of the Office of Research shall institute the above stated policy as the facility license holder. The Nuclear Safety Committee (NSC) has been chartered to assist in meeting this responsibility by providing timely, objective, and independent reviews, audits, recommendations and approvals on matters affecting nuclear safety. The following describes the composition and conduct of the NSC.

6.2.1 NSC Composition and Qualifications. The UCD/MNRC Director shall appoint the Chairperson of the NSC. The NSC Chairperson shall appoint a Nuclear Safety Committee (NSC) of at least five (5) members knowledgeable in fields which relate to nuclear safety. The NSC shall evaluate and review nuclear safety associated with the operation and use of the UCD/MNRC.

6.2.2 NSC Charter and Rules. The NSC shall conduct its review and audit (inspection) functions in accordance with a written charter. This charter shall include provisions for:

a. Meeting frequency (The committee shall meet at least semiannually).

b. Voting rules.

c. Quorums (For the full committee, a quorom will be at least five (5) members.

d. A committee review function and an audit/inspection function.

e. Use of subcommittees.

f. Review, approval and dissemination of meeting minutes.

6.2.3 Review Function. The responsibilities of the NSC, or a designated subcommittee thereof, shall include but are not limited to the following:

a. Review approved experiments utilizing UCD/MNRC nuclear facilities.

b. Review and approve all proposed changes to the facility license, the Technical Specifications and the Safety Analysis Report, and any new or changed Facility Use Authorizations and proposed Class I modifications, prior to implementing (Class I) modifications, prior to taking action under the preceding documents or prior to forwarding any of these documents to the Nuclear Regulatory Commission.

c. Review and determine whether a proposed change, test, or experiment would constitute an unreviewed safety question or require a change to the license, to a Facility Use Authorization, or to the Technical Specifications. This determination may be in the form of verifying a decision already made by the UCD/MNRC Director.

d. Review reactor operations and operational maintenance, Class I modification records, and the health physics program and associated records for all UCD/MNRC nuclear facilities.

e. Review the periodic updates of the Emergency Plan and Physical Security Plan for UCD/MNRC nuclear facilities.

f. Review and update the NSC Charter every two (2) years.

g. Review abnormal performance of facility equipment and operating anomalies.

h. Review all reportable occurrences and all written reports of such occurrences prior to forwarding the final written report to the Nuclear Regulatory Commission.

i. Review the NSC annual audit/inspection of the UCD/MNRC nuclear facilities and any other inspections of these facilities conducted by other agencies.

6.2.4 Audit/Inspection Function. The NSC or a subcommittee thereof, shall audit/inspect reactor operations and health physics annually. The annual audit/inspection shall include, but not be limited to the following:

a. Inspection of the reactor operations and operational maintenance, Class I modification records, and the health physics program and associated records, including the ALARA program, for all UCD/MNRC nuclear facilities.

b. Inspection of the physical facilities at the UCD/MNRC.

c. Examination of reportable events at the UCD/MNRC.

d. Determination of the adequacy of UCD/MNRC standard operating procedures.

e. Assessment of the effectiveness of the training and retraining programs at the UCD/MNRC.

f. Determination of the conformance of operations at the UCD/MNRC with the facility's license and Technical Specifications, and applicable regulations.

g. Assessment of the results of actions taken to correct deficiencies that have occurred in nuclear safety related equipment, structures, systems, or methods of operations.

h. Inspection of the currently active Facility Use Authorizations and associated experiments.

i. Inspection of future plans for facility modifications or facility utilization.

j. Assessment of operating abnormalities.

k. Determination of the status of previous NSC recommendations.

6.3 Radiation Safety. The Health Physics Manager shall be responsible for implementation of the UCD/MNRC Radiation Safety Program. The program should use the guidelines of the American National Standard for Radiation Protection at Research Reactor Facilities (ANSI/ANS 15.11). The Health Physics Manager shall report to the UCD/MNRC Director.

6.4 Procedures. Written procedures shall be prepared and approved prior to initiating any of the activities listed in this section. The procedures shall be approved by the UCD/MNRC Director. A periodic review of procedures shall be performed and documented in a timely manner by the UCD/MNRC staff to assure that procedures are current. Procedures shall be adequate to assure the safe operation of the reactor, but shall not preclude the use of independent judgment and action should the situation require. Procedures shall be in effect for the following items:

6.4.1 Reactor Operations Procedures

a. Startup, operation, and shutdown of the reactor.

b. Fuel loading, unloading, and movement within the reactor.

c. Control rod removal or replacement.

d. Routine maintenance of the control rod drives and reactor safety and interlock systems or other routine maintenance that could have an effect on reactor safety.

e. Testing and calibration of reactor instrumentation and controls, control rods and control rod drives.

f. Administrative controls for operations, maintenance, and conduct of irradiations and experiments that could affect reactor safety or core reactivity.

g. Implementation of required plans such as emergency and security plans.

h. Actions to be taken to correct potential malfunctions of systems, including responses to alarms and abnormal reactivity changes.

6.4.2 Health Physics Procedures

a. Testing and calibration of area radiation monitors, facility air monitors, laboratory radiation detection systems, and portable radiation monitoring instrumentation.

b. Working in laboratories and other areas where radioactive materials are used.

c. Facility radiation monitoring program including routine and special surveys, personnel monitoring, monitoring and handling of radioactive waste, and sampling and analysis of solid and liquid waste and gaseous effluents released from the facility. The program shall include a management commitment to maintain exposures and releases as low as reasonably achievable (ALARA).

d. Monitoring radioactivity in the environment surrounding the facility.

e. Administrative guidelines for the facility radiation protection program to include personnel orientation and training.

f. Receipt of radioactive materials at the facility, and unrestricted release of materials and items from the facility which may contain induced radioactivity or radioactive contamination.

g. Leak testing of sealed sources containing radioactive materials.

h. Special nuclear material accountability.

i. Transportation of radioactive materials.

Changes to the above procedures shall require approval of the UCD/MNRC Director. All such changes shall be documented.

6.5 Experiment Review and Approval. Experiments having similar characteristics are grouped together for review and approval under specific Facility Use Authorizations. All specific experiments to be performed under the provisions of an approved Facility Use Authorization shall be approved by the UCD/MNRC Director or his designated alternate.

a. Approved experiments shall be carried out in accordance with established and approved procedures.

b. Substantive change to a previously approved experiment shall require the same review and approval as a new experiment.

c. Minor changes to an experiment that do not significantly alter the experiment may be approved by a senior reactor operator.

6.6 Required Actions

6.6.1 Action to be taken in case of a safety limit violation. In the event of a safety limit violation (fuel temperature), the following action shall be taken:

a. The reactor shall be shut down and reactor operation shall not be resumed until authorized by the NRC.

b. The safety limit violation shall be promptly reported to the UCD/MNRC Director.

c. The safety limit violation shall be reported to the chairman of the NSC and to the NRC by the UCD/MNRC Director.

d. A safety limit violation report shall be prepared. The report shall describe the following:

(1) Applicable circumstances leading to the violation, including when known, the cause and contributing factors.

(2) Effect of the violation upon reactor facility components, systems, or structures, and on the health and safety of personnel and the public.

(3) Corrective action to be taken to prevent reoccurrence.

e. The safety limit violation report shall be reviewed by the NSC and then be submitted to the NRC when authorization is sought to resume operation of the reactor.

6.6.2 Actions to be taken for reportable occurrences. In the event of reportable occurrences, the following actions shall be taken:

a. Reactor conditions shall be returned to normal or the reactor shall be shut down. If it is necessary to shut down the reactor to correct the occurrence, operations shall not be resumed unless authorized by the UCD/MNRC Director or his designated alternate.

b. The occurrence shall be reported to the UCD/MNRC Director or the designated alternate. The UCD/MNRC Director shall report the occurrence to the NRC as required by these Technical Specifications or any applicable regulations.

c. Reportable occurrences should be verbally reported to the Chairman of the NSC and the NRC Operations Center within 24 hours of the occurrence. A written preliminary report shall be sent to the

NRC, Attn: Document Control Desk, 1 White Flint North, 11555 Rockville Pike, Rockville MD 20852, within 14 days of the occurrence. A final written report shall be sent to the above address within 30 days of the occurrence.

d. Reportable occurrences should be reviewed by the NSC prior to forwarding any written report to the Vice Chancellor of the Office of Research or to the Nuclear Regulatory Commission.

6.7 Reports. All written reports shall be sent within the prescribed interval to the NRC, Attn: Document Control Desk, 1 White Flint North, 11555 Rockville Pike, Rockville MD 20852.

6.7.1 Operating Reports. An annual report covering the activities of the reactor facility during the previous calendar year shall be submitted within six months following the end of each calendar year. Each annual report shall include the following information:

a. A brief summary of operating experiences including experiments performed, changes in facility design, performance characteristics and operating procedures related to reactor safety occurring during the reporting period, and results of surveillance tests and inspections.

b. A tabulation showing the energy generated by the reactor (in megawatt hours), hours the reactor was critical, and the cumulative total energy output since initial criticality.

c. The number of emergency shutdowns and inadvertent scrams, including reasons for the shutdowns or scrams.

d. Discussion of the major maintenance operations performed during the period, including the effect, if any, on the safety of the operation of the reactor and the reasons for any corrective maintenance required.

e. A brief description, including a summary of the safety evaluations, of changes in the facility or in procedures, and of tests and experiments carried out pursuant to Section 50.59 of 10 CFR Part 50.

f. A summary of the nature and amount of radioactive effluents released or discharged to the environment beyond the effective control of the licensee as measured at or prior to the point of such release or discharge, including the following:

(1) Liquid Effluents (summarized on a monthly basis).

(a) Liquid radioactivity discharged during the reporting period tabluated as follows:

1 The total estimated quantity of radioactivity released (in curies).

2 An estimation of the specific activity for each detectable radionuclide present if the specific activity of the released material after dilution is greater than $1x10^{-7}$ microcuries/ml.

3 A summary of the total release in curies of each radionuclide determined in 2 above for the reporting period based on representative isotopic analysis.

4 An estimated average concentration of the released radioactive material at the point of release for each month in which a release occurs, in terms of microcuries/ml and the fraction of the applicable concentration limit in 10 CFR 20.

(b) The total volume (in gallons) of effluent water (including diluent) released during each period of liquid effluent release.

(2) Airborne Effluents (summarized on a monthly basis):

(a) Airborne radioactivity discharged during the reporting period (in curies) tabulated as follows:

1 The total estimated quantity of radioactivity released (in curies) determined by an appropriate sampling and counting method.

2 The total estimated quantity (in curies) of Argon-41 released during the reporting period based on data from an appropriate monitoring system.

3 The estimated maximum annual average concentration of Argon-41 in the unrestricted area (in microcuries/ml), the estimated corresponding annual radiation dose at this location (in millirem), and the fraction of the applicable 10 CFR 20 limits for these values.

4 The total estimated quantity of radioactivity in particulate form with half lives greater than eight days (in curies) released during the reporting period as determined by an appropriate particulate monitoring system.

5 The average concentration of radioactive particulates with half-lives greater than eight days released (in microcuries/ml) during the reporting period.

(3) Solid Waste (summarized on an annual basis)

(a) The total amount of solid waste packaged (in cubic feet).

(b) The total activity in solid waste (in curies).

(c) The dates of shipment and disposition (if shipped off site).

g. An annual summary of the radiation exposure received by facility operations personnel, by facility users, and by visitors in terms of the average radiation exposure per individual and the greatest exposure per individual in each group.

h. An annual summary of the radiation levels and levels of contamination observed during routine surveys performed at the facility in terms of average and highest levels.

i. An annual summary of any environmental surveys performed outside the facility.

6.7.2. Special Reports. Special reports are used to report unplanned events as well as planned administrative changes. The following classifications shall be used to determine the appropriate reporting schedule:

a. A report within 24 hours by telephone or similar conveyance to the NRC operations center of:

(1) Any accidental release of radioactivity into unrestricted areas above applicable unrestricted area concentration limits, whether or not the release resulted in property damage, personal injury, or exposure;

(2) Any violation of a safety limit;

(3) Operation with a limiting safety system setting less conservative than specified in Section 2.0, Limiting Safety System Settings;

(4) Operation in violation of a Limiting Condition for Operation;

(5) Failure of a required reactor or experiment safety system component which could render the system incapable of performing its intended safety function unless the failure is discovered during maintenance tests or a period of reactor shutdown;

(6) Any unanticipated or uncontrolled change in reactivity greater than $1.00;

(7) An observed inadequacy in the implementation of either administrative or procedural controls, such that the inadequacy could have caused the existence or development of a condition which could have resulted in operation of the reactor outside the specified safety limits; and

(8) A measurable release of fission products from a fuel element.

b. A report within 14 days in writing to the NRC, Document Control Desk, Washington DC.

(1) Those events reported as required by Technical Specifications 6.7.2.a.1 through 6.7.2.a.8.

(2) The written report (and, to the extent possible, the preliminary telephone report or report by similar conveyance) shall describe, analyze, and evaluate safety implications, and outline the corrective measures taken or planned to prevent reoccurrence of the event.

c. A report within 30 days in writing to the NRC, Document Control Desk, Washington DC.

(1) Any significant variation of measured values from a corresponding predicted or previously measured value of safety-connected operating characteristics occurring during operation of the reactor;

(2) Any significant change in the transient or accident analysis as described in the Safety Analysis Report (SAR);

(3) A personnel change involving the positions of UCD/MNRC Director or UCD Vice Chancellor for Research; and

(4) Any observed inadequacies in the implementation of administrative or procedural controls such that the inadequacy causes or could have caused the existence or development of an unsafe condition with regard to reactor operations.

6.8 Records. Records may be in the form of logs, data sheets, or other suitable forms. The required information may be contained in single or multiple records, or a combination thereof. Records and logs shall be prepared for the following items and retained for a period of at least five years for items a. through f., and indefinitely for items g. through k. (Note: Annual reports, to the extent they contain all of the required information, may be used as records for items g. through j.)

a. Normal reactor operation.

b. Principal maintenance activities.

c. Those events reported as required by Technical Specifications 6.7.1 and 6.7.2.

d. Equipment and component surveillance activities required by the Technical Specifications.

e. Experiments performed with the reactor.

f. Airborne and liquid radioactive effluents released to the environments and solid radioactive waste shipped off site.

g. Offsite environmental monitoring surveys.

h. Fuel inventories and transfers.

i. Facility radiation and contamination surveys.

j. Radiation exposures for all personnel.

k. Updated, corrected, and as-built drawings of the facility.

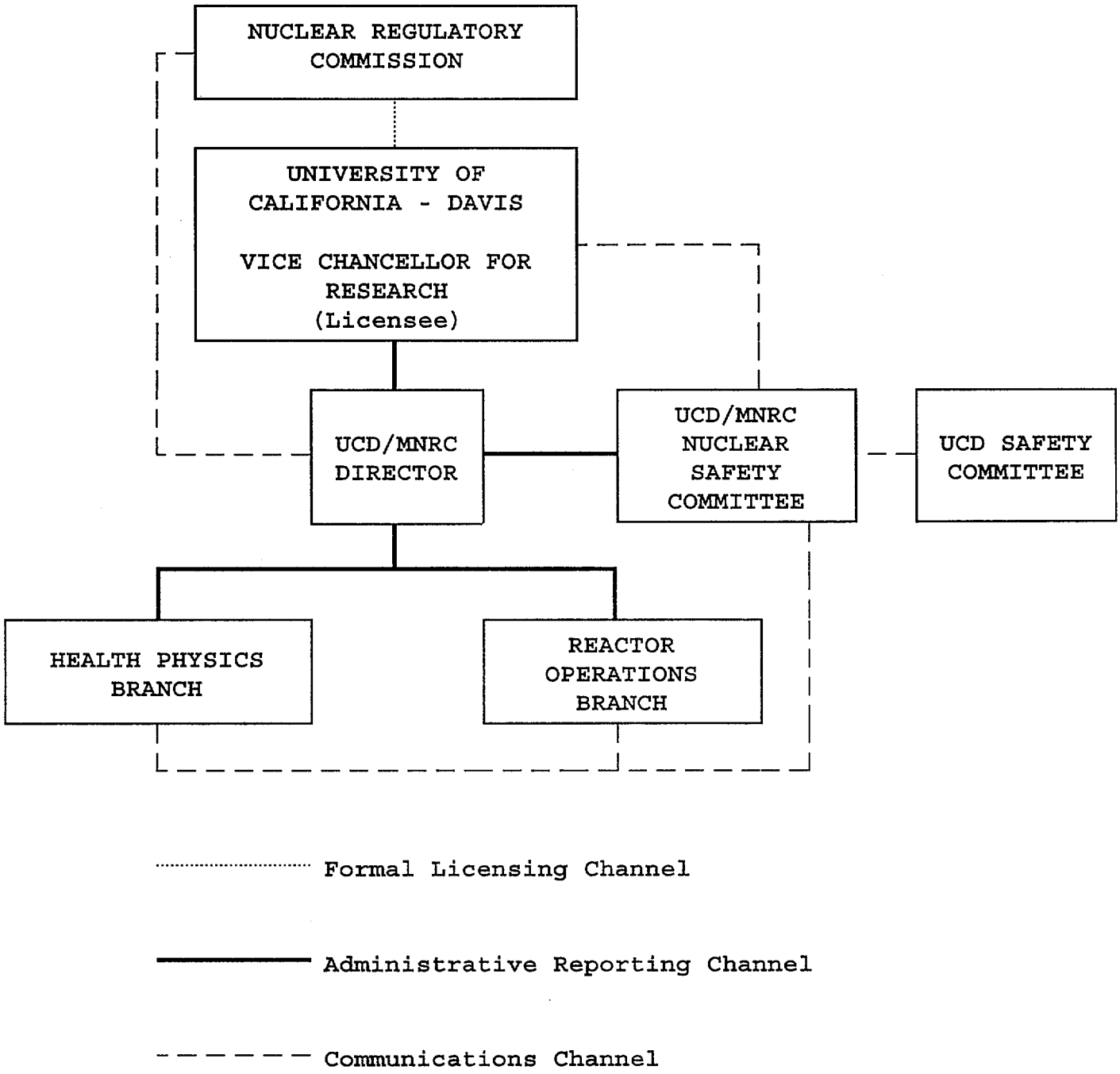


UCD/MNRC ORGANIZATION FOR LICENSING AND OPERATION
FIGURE 6.1

# CHAPTER 8

# ELECTRICAL POWER

Chapter 8 - Valid Pages
Rev. 6 03/15/01

| | |
|---|---|
| i | Rev. 6 03/15/01 |
| 8-1 | Rev. 6 03/15/01 |
| 8-2 | Rev. 6 03/15/01 |
| 8-3 | Rev. 6 03/15/01 |

## TABLE OF CONTENTS



## LIST OF FIGURES

# 8.0 ELECTRICAL POWER

## 8.1 Introduction

The electrical power for the UCD/MNRC is supplied from a transformer located to the south of the facility. The interconnections between the transformer and the UCD/MNRC are designed in accordance with the following codes and standards:

National Electrical Code - NFPA-70;
National Electrical Safety Code;
NEMA Standards.

The design of the UCD/MNRC reactor does not require electrical power to safely shut down the reactor, nor does it require electrical power to maintain acceptable shutdown conditions.

## 8.2 UCD/MNRC Electrical Power System

The UCD/MNRC receives its electrical power through an underground primary 480/277 V, 3-phase, 3-wire distribution system from the nearby transformer.

As shown in Figure 8.1, the UCD/MNRC electrical power is channeled through a 480/277 V, 800 A, 4-wire, main breaker which incorporates a "UFER" ground system. This breaker feeds the facility main distribution panel, HD. The reactor system receives electrical power through the 50 kVA, 480 V, 3φ input 208/120 V transformer through panel 2A.

A Un-interruptible Power Supply (UPS) feeds the reactor instrumentation and control system and radiation monitoring equipment. This system is designed to provide power to the reactor console and the translator rack for approximately 15 minutes after loss of normal electrical power.

The UCD/MNRC UPS also provides power to the stack continuous air monitor (CAM), and the six facility remote area monitors (RAMs), for a minimum of four (4) hours after loss of normal electrical power.

The UCD/MNRC UPS is not needed for safe reactor shutdown or maintenance of safe shutdown conditions. It does, however, supply the necessary instrumentation so that the operator can initiate and affirm complete reactor shutdown, rod positions, and power level. More importantly, it supplies radiation monitoring equipment with power so that radiation levels are known.

The electrical power for the UCD/MNRC reactor's primary, makeup, and purification water systems, as well as the pool and reactor "on" lights, is supplied from panel 2B.

The facility air handling and exhaust systems are fed through panels 2AC and 2A.

A propane generator provides backup power to the reactor room ventilation system (Chapter 9), and to the I-125 production facility glovebox and fume hood located in the reactor room (Chapter 10).

Two other UCD/MNRC systems, fire alarm and security, are equipped with their own UPSs. The battery packs for both of these systems are capable of maintaining normal operations for 24 hours after loss of normal power.

The reactor/radiation instruments receive their power from a regulated power supply that meets a commercial grade standard.

## 8.3 UCD/MNRC Raceway System

The UCD/MNRC raceway system consists of the conduit runs, cable trays, pull boxes, and fittings that contain all power, instrumentation, and control wiring associated with the reactor. Cabling originating in (detectors) or above the tank (control rod drives) is routed either along the tank wall or under the bridge to the reactor room cable trench. A raceway contains the cables between the cable trench and the NM-1000 and the NPP-1000 (Chapter 7). Separate conduit runs have been provided between the reactor room and the control room for reactor control and instrumentation wiring. The routing is such that there are two independent paths giving physical isolation. That is, the reactor-instrumentation wiring is designed so that one control and one safety-instrumentation channel takes one path. Additionally, the other control and safety-instrumentation channel is contained in the other path. The control wiring for control-rod drives is split in the same manner.

Since controls are not required for safe shutdown, no special fire-protection system is required for the raceway system.

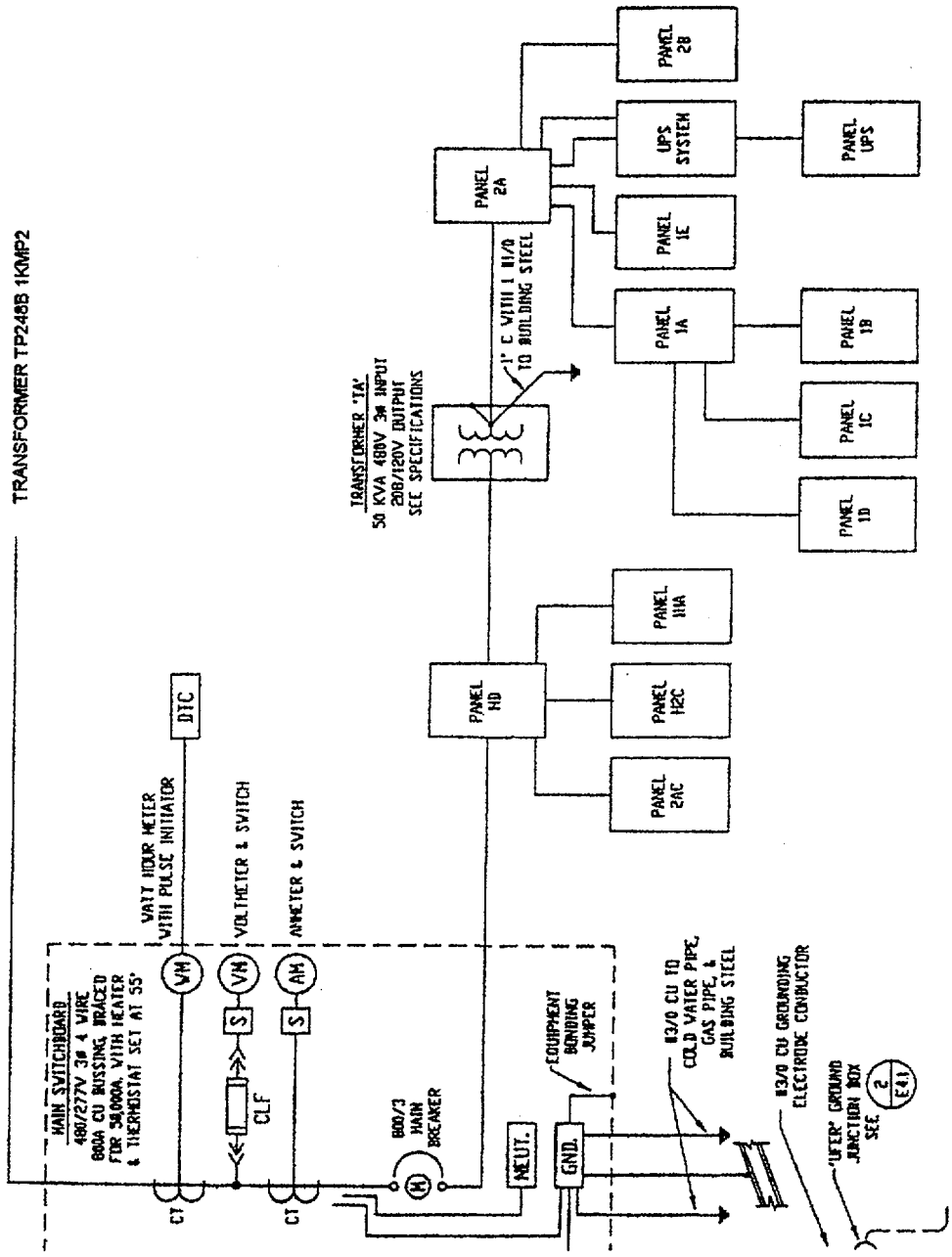


UCD/MNRC ELECTRICAL DISTRIBUTION SYSTEM - SINGLE LINE DIAGRAM

FIGURE 8.1

# CHAPTER 9

# AUXILIARY SYSTEMS

Chapter 9 - Valid Pages
Rev. 6 03/15/01

| | | |
|---|---|---|
| i | Rev. 2 | 04/03/98 |
| ii | Rev. 4 | 12/24/99 |
| iii | Rev. 2 | 04/03/98 |
| 9-1 | Rev. 4 | 12/24/99 |
| 9-2 | Rev. 2 | 04/03/98 |
| 9-3 | Rev. 2 | 04/03/98 |
| 9-4 | Rev. 2 | 04/03/98 |
| 9-5 | Rev. 2 | 04/03/98 |
| 9-6 | Rev. 2 | 04/03/98 |
| 9-7 | Rev. 2 | 04/03/98 |
| 9-8 | Rev. 4 | 12/24/99 |
| 9-9 | Rev. 2 | 04/03/98 |
| 9-10 | Rev. 2 | 04/03/98 |
| 9-11 | Rev. 2 | 04/03/98 |
| 9-12 | Rev. 4 | 12/24/99 |
| 9-13 | Rev. 4 | 12/24/99 |
| 9-14 | Rev. 2 | 04/03/98 |
| 9-15 | Rev. 4 | 12/24/99 |
| 9-16 | Rev. 2 | 04/03/98 |
| 9-17 | Rev. 6 | 03/15/01 |
| 9-18 | Rev. 6 | 03/15/01 |
| 9-19 | Rev. 4 | 12/24/99 |
| 9-20 | Rev. 4 | 12/24/99 |
| 9-21 | Rev. 6 | 03/15/01 |
| 9-22 | Rev. 6 | 03/15/01 |
| 9-23 | Rev. 6 | 03/15/01 |
| 9-24 | Rev. 2 | 04/03/98 |
| 9-25 | Rev. 4 | 12/24/99 |
| 9-26 | Rev. 4 | 12/24/99 |
| 9-27 | Rev. 4 | 12/24/99 |
| 9-28 | Rev. 4 | 12/24/99 |
| 9-29 | Rev. 2 | 04/03/98 |
| 9-30 | Rev. 2 | 04/03/98 |
| 9-31 | Rev. 4 | 12/24/99 |
| 9-32 | Rev. 4 | 12/24/99 |
| 9-33 | Rev. 4 | 12/24/99 |
| 9-34 | Rev. 4 | 12/24/99 |
| 9-35 | Rev. 2 | 04/03/98 |
| 9-36 | Rev. 2 | 04/03/98 |
| 9-37 | Rev. 2 | 04/03/98 |
| 9-38 | Rev. 4 | 12/24/99 |
| 9-39 | Rev. 4 | 12/24/99 |
| 9-40 | Rev. 4 | 12/24/99 |

the AMUWS piping is dry and will only be filled with water when the pump is started by the reactor operator from the control room. Check valves located in the reactor room prevent water from siphoning from the reactor tank back into the storage tanks when the system is in the stand-by mode of operation.

A propane electrical generator supplies back-up electrical power to the AMUWS pump, the TCP, the reactor room ventilation fan (EF-1), and the damper controls for the reactor room in the event that normal electrical power is lost. A light on the TCP indicates if the generator is operational.

The AMUWS contains pressure and flow gauges to verify sufficient water flow is maintained for the duration of its use (Section 13.2.3.2.2).

## 9.4 Fire Protection

### 9.4.1 Design Basis

The design basis for the UCD/MNRC fire protection system is to provide a detection and suppression capability which will mitigate any losses to property should a fire develop. It should be noted that fire protection is not required to accomplish a safe shutdown of the reactor or to maintain a safe shutdown condition.

### 9.4.2 Description

Both detection and suppression systems installed in accordance with National Fire Protection Code are utilized in the UCD/MNRC.

A dry-pipe, pre-action fire sprinkler system provides fire suppression for the UCD/MNRC as shown in Figures 9.9 and 9.10. This system receives its water supply from the existing on-site 12-in. combination fire and domestic water main. Also, a fire hydrant is located near the northwest corner of the NDI Facility, approximately 150 ft from the UCD/MNRC.

In addition to the dry-pipe system, the DAC in the reactor room, and the instrument cabinets and control consoles in the reactor and radiography control rooms contain fire detection and halon suppression systems, i.e., units located within the enclosures.

The entire UCD/MNRC has either thermal or ionization-type fire detection devices as well as manual pull boxes. Thermal detectors located in select air handling system ducts shut down the system when activated (Section 9.5).

The UCD/MNRC fire detection/suppression system is automatic, zoned, and is supervised with hardwired signal connections. The system has a self-contained 24-hr battery backup. There are two master panels: one is located near the main entrance to Room 114; the other panel is outside near the vehicle gate. The master panel provides local alarm information and transmits signals to a 24-hour monitored location.

Whenever one of the fire detection devices activate, visual and audible warning devices alarm throughout the facility.

### 9.4.3 Evaluation

The UCD/MNRC fire protection system has been designed to meet the design basis. The dry-pipe suppression provides coverage of the critical areas and the detection system covers the entire structure. Special halon systems have been provided to protect instrumentation and control cabinets/consoles.

## 9.5 Air Handling System

### 9.5.1 Design Basis

The UCD/MNRC air handling system provides heating and cooling for personnel comfort and serves several important roles for radiological control. These roles are as follows:

- Provide air changes in the reactor room and in other areas throughout the facility to maintain Ar-41 and N-16 concentrations within the limits in of 10 CFR Part 20;
- Maintain pressure differentials throughout the facility to limit spread of radioactive contamination;
- Provide a means to isolate, recirculate, and filter the air in the reactor room should there be a release of fission products or other abnormal airborne radionuclides.

### 9.5.2 Description

The UCD/MNRC air handling system is served by 14 different heating and air conditioning systems and two exhaust systems (Figure 9.11). All of these systems provide normal heating, cooling, and ventilation functions for personnel comfort and equipment cooling. In addition to the normal functions, many of these systems serve important roles in minimizing Ar-41 and N-16 concentrations, and help with contamination control.

All of these systems are functionally similar. They recirculate and condition a significant portion of the air from the areas they serve and receive makeup air from outside the facility. These systems are refrigeration-type except those in the staging areas. The units for these areas are equipped with evaporator-type coolers.

The flows throughout the UCD/MNRC have been designed and balanced so that the reactor room, and other areas within the facility are at a slightly negative pressure with respect to the surrounding areas. The flow rates throughout the facility, and the expected negative pressure differential in the reactor room, the preparation area and equipment room, and the radiography bays are as shown in Figure 9.11. The pressure differentials are monitored by manometers.

The radiography bay air handling (ventilation) system will normally operate whenever the reactor is operating. However, it is permissible to operate the reactor without operating this part of the air handling system. The impact of not operating this ventilation system while the reactor is operating is not significant relative to occupational or offsite doses and is discussed in detail in Chapter 11 (Sections 11.1.1.1.1 through 11.1.1.1.4) and Appendix A.

The reactor room exhaust passes through a pre-filter and a HEPA filter prior to being discharged through the 60-ft high stack. The exhaust from the radiography bays passes through a standard particulate filter prior to being discharged through the stack. It should be noted that the exhaust from the fume hood located in the preparation area outside the reactor room passes through a HEPA filter prior to discharge into the radiography bay exhaust system. Each radiography bay exhaust contains a damper that can be closed for isolation.

The reactor room also contains a glovebox and a small fume hood which are largely used to support the program for the production of iodine-125. Both of these containments exhaust through two activated charcoal filters (i.e., two filters for the glovebox and two for the fume hood) and then discharge into the reactor room exhaust system. When there is no radioiodine processing being conducted in these containments, the exhaust flow from the glovebox and hood mixes with reactor room exhaust air, is filtered by the pre-filter and HEPA filter mentioned above, is further mixed with the exhaust from the radiography bay ventilation system and is then discharged out the 60-ft high stack. However, as explained below, the air flow exhausting from the reactor room, which would include any exhaust from the glovebox and hood, will be diverted through additional particulate and charcoal filters prior to and during I-125 processing operations in either the glovebox or hood.

To minimize the potential for releasing I-125 into the unrestricted area through ventilation effluents during routine processing of I-125 in the glovebox or fume hood, the ventilation exhaust flows from these two containments along with the reactor room exhaust receive special filtration. As indicated above, immediately prior to and during processing operations in the glovebox and/or fume hood, the exhaust flow from these containments mixed with the reactor room exhaust will be routed through additional filtration. More specifically, the exhaust stream will be redirected through a moisture separator, a standard pre-filter, a

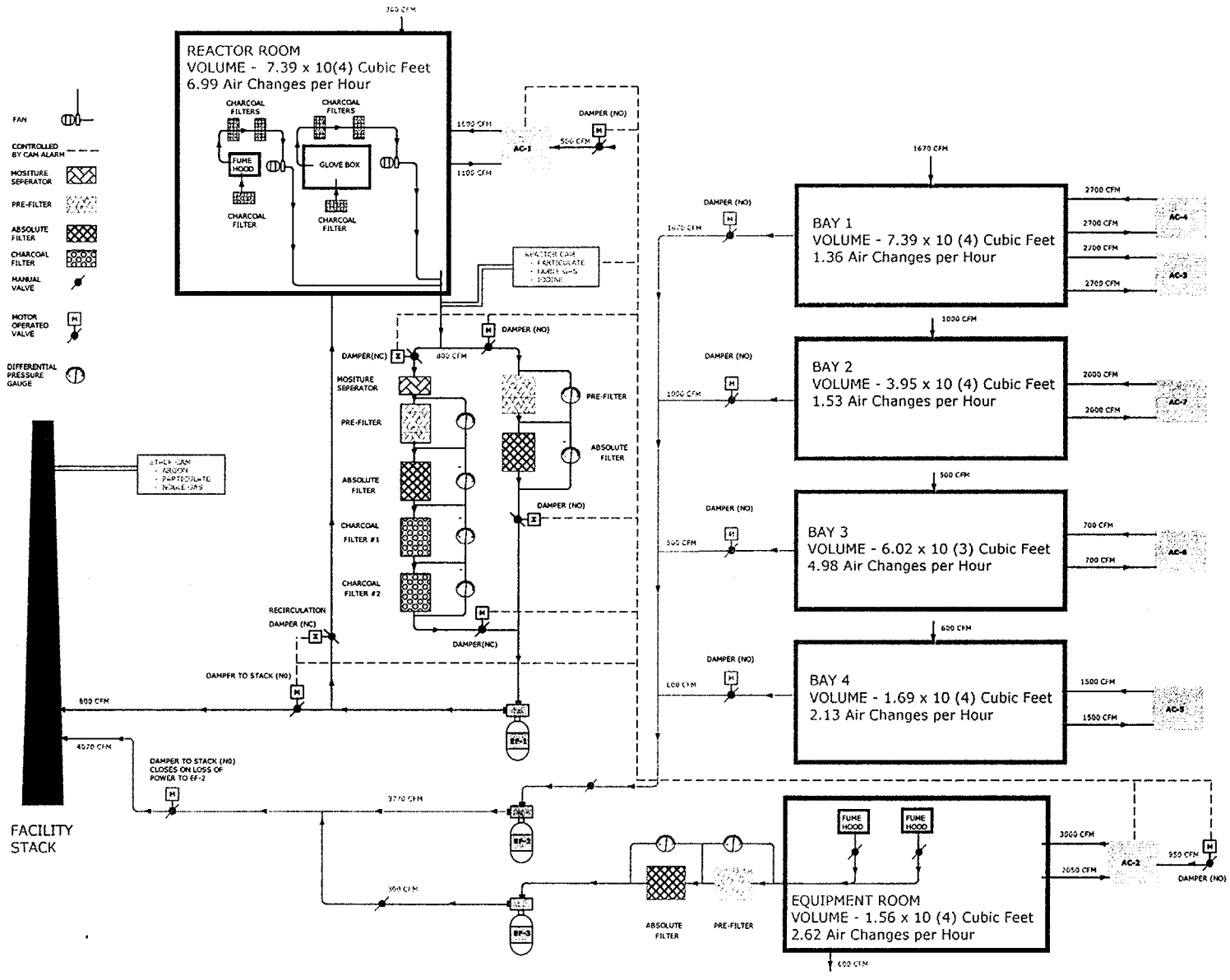


UCD/MNRC AIR HANDLING SYSTEM
FIGURE 9.11

HEPA filter and two activated charcoal filters before being mixed with the radiography bays' ventilation flow and discharged out the 60-foot high stack of the UCD/MNRC facility.

Should there be an increase in the I-125 concentration in the exhaust from the glovebox, fume hood and/or the reactor room, the reactor room ventilation system contains an isolation/recirculation capability. This feature can be activated manually or will be automatically activated if the continuous air monitor (CAM) which monitors the air from the reactor room for radioactive iodine, beta/gamma particulates, and noble gases, or the CAM dedicated to monitoring I-125 in the effluent from the glovebox, fume hood and reactor room, exceeds its preset limits. If a CAM limit is exceeded on either CAM, simultaneous automatic actions are initiated which stop the flow of reactor room air out of the exhaust stack, and thus any release of radioactive material, and continue the air filtration through the moisture separator, the pre-filter, the HEPA filter and the charcoal filters. In addition, in this recirculation mode, ventilation air from the reactor exhaust (including the glovebox and fume hood) is returned to the reactor room for recycling through the bank of filters. During recirculation, AC-1 (the reactor room normal air recirculation and makeup system) is shut down and the damper in the makeup duct is closed. This action prevents the reactor room from being pressurized by the unit. AC-2 (the preparation area and equipment room air recirculation and makeup system) is prevented from being shut down. This action maintains the area adjacent to the reactor room at a slightly positive pressure and reduces the potential for contamination spread.

As noted, the reactor room ventilation system normally by-passes the particulate-charcoal filter system and the normal exhaust path is through a pre-filter, a HEPA filter and then out the stack. However, during a LOCA, the radiation levels in the reactor room could cause the reactor room CAM to alarm. As previously indicated, this would automatically redirect the reactor room exhaust path through a moisture separator, a pre-filter, HEPA filter, two charcoal filters and then back to the reactor room. A ventilation damper control switch located on the temperature control panel in the reactor control room enables the reactor operator to override the damper controls for recirculation and continue exhausting air from the reactor room through the normal exhaust path. (Section 13.2.3.2.2.).

### 9.5.3 Evaluation

The UCD/MNRC air handling system has been designed to maintain the reactor room consistently negative with respect to air pressure in the surrounding areas. It provides the necessary air changes in the reactor room to maintain routine radioactive gas concentrations at a level where the 10 CFR Part 20 dose limits will be easily met. It also provides a means for isolating the reactor room and recirculating the room air through HEPA and activated charcoal filters should there be a release of fission products or other abnormal airborne radionuclides.

The air handling system will also maintain the radiography bays at a negative pressure relative to surrounding areas when the radiography bays ventilation system is operating, which is the normal operating mode for the UCD/MNRC facility.

## 9.6 Interlocks/Controls - Bay Shutters/Doors

Each of the UCD/MNRC radiography bay shutters (bulk shield) and the bay doors are equipped with controls incorporating interlocks to prevent personnel from entering the bays anytime the reactor is on and shutters are not closed. In addition to the shutter and door interlocks, there are reactor shutdown devices that will either scram the reactor or prevent it from being operated if an unsafe condition exist. The following sections describe the controls, interlocks, and reactor shutdown devices in detail.

### 9.6.1 Shutter (Bulk Shield) Controls/Interlocks

Figure 9.12 is the Bay 2 shutter control/interlock schematic and Figure 9.13 shows the corresponding limit switches. The controls/interlocks for all four shutters are identical except for the number of bay doors. Bays 1, 3, and 4 have one door each while Bay 2 has two doors.

The shutter can be controlled from three locations, the radiography control room and two locations in the bay. One of the bay shutter control stations is located on the parapet next to the shutter, and the other is on the bay floor in the area of the motor control center.

The logic diagrams for shutter operation from the radiography control room and from the bay are shown in Figures 9.14 and 9.15, respectively.

The key features of this control/interlock system are as follows:

1. The shutter movement can be stopped at any time from any of the three shutter control stations;

2. The shutter can be closed at any time (except when a "stop" switch is depressed) from either of the two control stations located in the radiography bay;

3. There is a keyswitch associated with the radiography control room and the bay floor control stations. These keyswitches use the same key. The key must be removed from one location and taken to the other location before the controls can be activated;

4. The shutter cannot be closed from the radiography control room without the keyswitch being activated. This prevents closing of the shutter from the radiography control room if personnel are on the parapet;

5. The shutter can only be opened from the radiography control room if the keyswitch (S2-2) is in place and the bay doors (K2-7X and K2-11X) are closed;

6. The shutter can only be opened from the bay floor station if the keyswitch (S2-1) is activated and the reactor is scrammed (K2-SR).

# CHAPTER 10

# EXPERIMENTAL FACILITIES AND UTILIZATION

Chapter 10 - Valid Pages
Rev. 6 03/15/01

| | | |
|---|---|---|
| i | Rev. 6 | 03/15/01 |
| ii | Rev. 6 | 03/15/01 |
| 10-1 | Rev. 4 | 12/24/99 |
| 10-2 | Rev. 2 | 04/03/98 |
| 10-3 | Rev. 2 | 04/03/98 |
| 10-4 | Rev. 4 | 12/24/99 |
| 10-5 | Rev. 4 | 12/24/99 |
| 10-6 | Rev. 4 | 12/24/99 |
| 10-7 | Rev. 4 | 12/24/99 |
| 10-8 | Rev. 2 | 04/03/98 |
| 10-9 | Rev. 2 | 04/03/98 |
| 10-10 | Rev. 2 | 04/03/98 |
| 10-11 | Rev. 4 | 12/24/99 |
| 10-12 | Rev. 4 | 12/24/99 |
| 10-13 | Rev. 4 | 12/24/99 |
| 10-14 | Rev. 4 | 12/24/99 |
| 10-15 | Rev. 4 | 12/24/99 |
| 10-16 | Rev. 4 | 12/24/99 |
| 10-17 | Rev. 4 | 12/24/99 |
| 10-18 | Rev. 4 | 12/24/99 |
| 10-19 | Rev. 3 | 03/15/99 |
| 10-20 | Rev. 6 | 03/15/01 |
| 10-20A | Rev. 6 | 03/15/01 |
| 10-20B | Rev. 6 | 03/15/01 |
| 10-20C | Rev. 6 | 03/15/01 |
| 10-20D | Rev. 6 | 03/15/01 |
| 10-20E | Rev. 6 | 03/15/01 |
| 10-21 | Rev. 4 | 12/24/99 |
| 10-22 | Rev. 4 | 12/24/99 |
| 10-23 | Rev. 4 | 12/24/99 |
| 10-24 | Rev. 3 | 03/15/99 |
| 10-25 | Rev. 4 | 12/24/99 |
| 10-26 | Rev. 4 | 12/24/99 |
| 10-27 | Rev. 3 | 03/15/99 |
| 10-28 | Rev. 4 | 12/24/99 |
| 10-29 | Rev. 4 | 12/24/99 |
| 10-30 | Rev. 4 | 12/24/99 |

TABLE OF CONTENTS

## LIST OF FIGURES

the hood at a negative pressure with respect to the surrounding room and maintains a hood face air velocity of approximately 150 ft/min when the sash is open. The air to the fan passes through a prefilter, an absolute filter and exhausts to the facility stack. The hood is located in the preparation area and provides working space around the receiver for handling rabbits before and after irradiation.

The terminus consists of two concentric tubes which extend into the reactor core. The inner tube is perforated with holes (which are smaller than the rabbit diameter). The bottom of the inner tube contains an aluminum spring shock absorber to lessen the impact of the rabbit when it reaches this end of the transfer line, which is approximately at the mid-plane of the core. When air flows to the terminus, the capsule rests in the bottom of the inner tube; when air flows to the receiver, the capsule moves out of the inner tube by air flowing through the tube's holes. The outer tube supports the inner tube and provides a path for the air to flow through.

The outer tube bottom support is shaped like the bottom of a fuel element and can fit into any fuel location in the core lattice. Both tubes, which extend to the top of the reactor tank, are offset to reduce radiation streaming. A weight has been installed to counteract the buoyancy of the air-filled tubes and keep the terminus firmly positioned in the core. The terminus can be removed from the core by releasing two couplings.

Two 1.25 in. aluminum transfer lines form a loop with receiver and terminus. The "rabbit" transfer line provides a path for rabbit travel between the receiver and terminus while the "air" transfer line directs air flow between receiver and terminus. Tubing bends are a minimum 2 ft radius, allowing clearance for the rabbit.

A solenoid valve directs flow through the transfer-line-loop sending the rabbit either to the terminus or to the receiver depending on valve position. When the solenoid valve is deenergized, rabbit transfer line air flows from terminus to receiver; when the solenoid valve is energized, rabbit transfer line air flows from receiver to terminus. Solenoid status (energized or deenergized) is indicated by red markings on the solenoid alignment rod.

A two horsepower blower circulates air through the transfer lines. The blower draws filtered room air through the solenoid valve, transfer lines, and a High Efficiency Particulate Air (HEPA) filter. The blower outlet goes to the facility exhaust system.

The transfer systems' controls allow operations in either manual or automatic modes. In manual mode, the solenoid valve is activated by the operator; in the automatic mode, the solenoid valve is activated by the timer mechanism, sending the rabbit into the core when the timer starts and retrieving the rabbit after a predetermined time period. The blower is manually operated in either mode. The controls for the system are located in a box next to the hood.

An interlock switch in the reactor control room provides the reactor operator with overall control of operation. The switch is interlocked to the power supply for the blower such that the switch must be "ON" for the blower to operate.

10.4.5 Individual Grid Plate Fuel Element Positions

Reactor grid positions vacant of fuel elements may be utilized for the irradiation of materials. These in-core irradiation facilities involve placement of an experiment in a fuel element grid position and use of these locations shall meet all the applicable requirements of the UCD/MNRC Technical Specifications.

10.4.6 Iodine-125 Production Facility

The iodine-125 (I-125) production facility is an experiment facility typically located in the outer hexagon of the reactor core. The facility provides for the production of curie amounts of I-125 from neutron activation of xenon-124 (Xe-124). The production facility consists of the following components: the primary containment, secondary containment, glove box, vacuum system, sodium hydroxide (NaOH) charging and dispensing system, gas supplies, cryogenics, hardware, control panel, a computer monitored safety interlock, and a fume hood. These components and the facility are described in Sections 10.4.6.1 through 10.4.6.11, and a schematic of the production facility is shown in Figure 10.9A.

A typical production facility irradiation would begin with the transfer of Xe-124 gas to the irradiation chamber. The location of the irradiation chamber will be conservatively limited to the outer three hexagons, but most typically in the outer hexagon, although analysis shows even the innermost hexagon could support the irradiation chamber without overheating a fuel element (Ref. 13.20). After several hours of irradiating the Xe-124 gas, the activated gas, Xe-125, will be transferred cryogenically to a decay storage vessel. After a few days, most of the activated Xe-125 will have decayed to I-125 and will plate-out inside the decay storage vessel. The remaining xenon gas will then be transferred cryogenically to another decay storage vessel or the irradiation chamber's cold finger, and the I-125 will be removed in solution by NaOH washes. The sodium iodide solution will then be packaged as a liquid and sent to an off-site user in an appropriate DOT container.

10.4.6.1 Primary Containment

Under normal operating conditions, the primary containment's components are the only ones that interact with the xenon gas. The components of the primary containment are the irradiation chamber, tubing, pneumatically-operated bellows valves, pneumatically-operated diaphragm valves, cold finger, decay storage vessel 1, decay storage vessel 2, pressure transducers, vacuum transducers, iodine trap, thermocouples, and heater tape. Whenever the facility is operational, the Xe gas shall be located in one of three locations: the irradiation

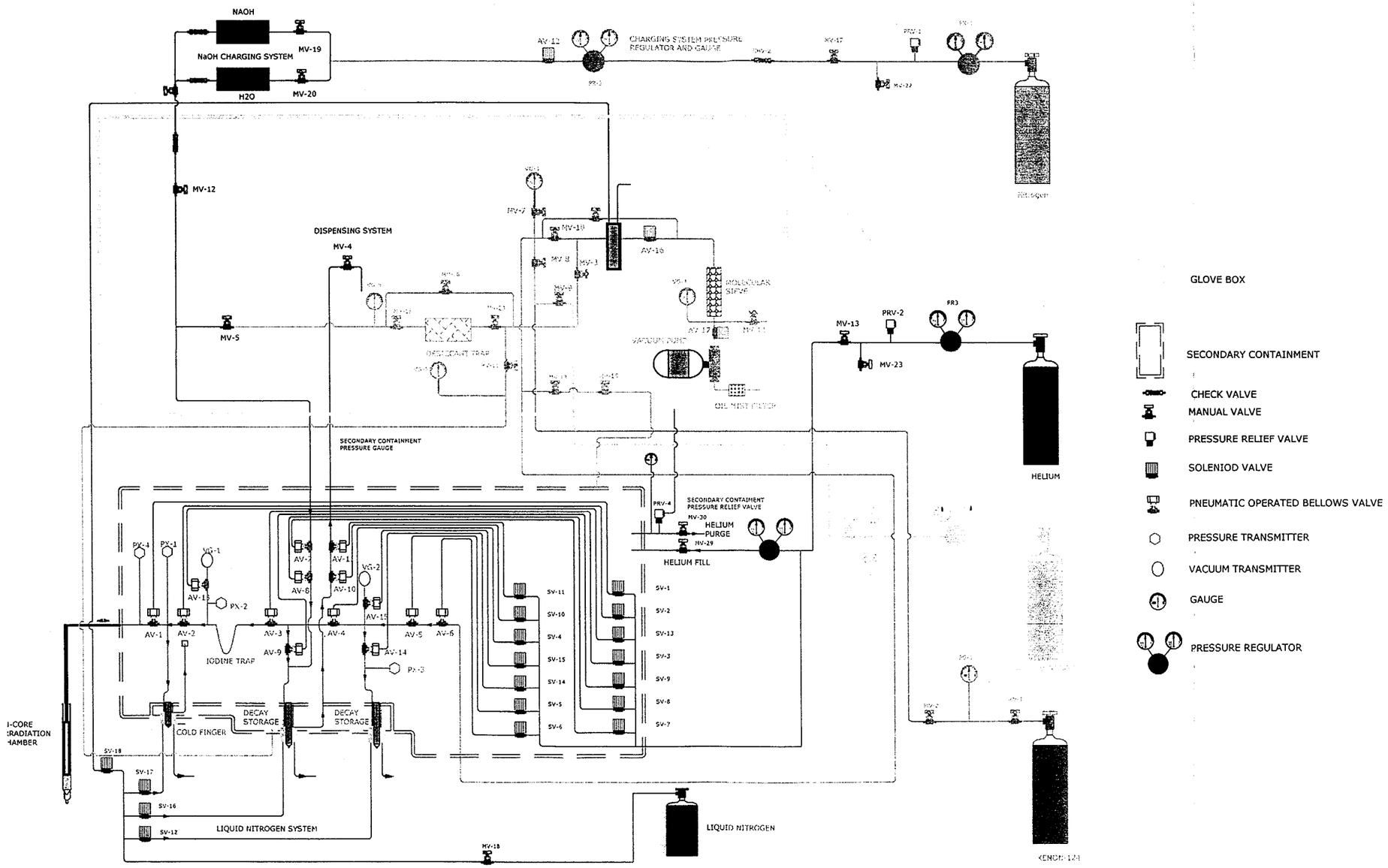


FIGURE 10.9A
IODINE-125 PRODUCTION FACILITY

chamber and cold finger, decay storage vessel 1, or decay storage vessel 2. During irradiation, the gas is typically at 180 psig, but the irradiation vessel has been tested to 450 psig, providing a safety factor of 2.5.

10.4.6.2 Secondary Containment

Although the primary containment is designed to have a very small integral leak rate, there does remain a finite probability that a leak could develop in a joint after continued use of the facility or due to a maintenance activity. Using a secondary containment boundary allows the expensive Xe-124 and the Xe-125 gas to be contained in case of a leak. By filling the secondary containment with helium gas, the xenon gas can be cryogenically-separated and recovered from the helium. The components of the secondary containment are as follows:

a. Aluminum tubing surrounding the primary containment tubing from the irradiation chamber to the secondary containment;

b. Secondary containment vessel which houses the pneumatically-operated bellows valves, pneumatic operators, and chamber for cold finger, decay storage vessel 1, and decay storage vessel 2;

c. Pressure relief valve, fill valve, and purge valve; and

d. Pressure transducers, thermocouples, and valve position indicators.

Secondary containment is provided around the irradiation chamber's primary containment to allow for recovery of the xenon gas if a leak occurs within the primary containment. The secondary containment will be filled with helium gas to approximately 1 to 5 psig. The volume of the secondary containment will allow for up to three liters of xenon gas to be added to the secondary with only a small increase in secondary pressure. Pneumatic actuation of the valves within the secondary containment will be by helium pressure to ensure that helium is maintained within the secondary. Located in a fuel storage pit, the secondary containment vessel will utilize the pit's concrete shielding to reduce radiation exposure. Shielding may also be placed over the secondary containment to reduce exposure and maintain whole body radiation levels below approximately 10 mrem/hr.

10.4.6.3 Glovebox

The glovebox, located in the reactor room, is a confinement barrier for protection of the worker. The glovebox contains its own ventilation and filtration system. Air from the reactor room is supplied to the glovebox through an activated charcoal filter. The glovebox exhausts through two activated charcoal filters to the reactor room ventilation line and maintains the glovebox's internal pressure negative with respect to the surrounding areas. During normal operation in the reactor room, the ventilation system exhausts through a pre-

filter and HEPA filter to the stack (i.e., normal reactor room ventilation). During processing of I-125, the reactor room ventilation system will exhaust through a moisture separator, a pre-filter, HEPA filter, and two charcoal filters (i.e., the recirculation filtration portion of the reactor room ventilation system), then to the stack. If the "I-125 CAM" (Chapter 11, Table 11-6) alarms, reactor room ventilation system dampers automatically change the flow to the reactor room recirculation mode (i.e., through a moisture separator, a pre-filter, HEPA filter, and two charcoal filters, then back to the reactor room).

10.4.6.4 Vacuum System

The vacuum system, located inside the glovebox, is used to evacuate the primary containment if any portion of it contains air or gases. The system can also be used with an external helium leak detector if leak detection must be performed. During routine operations, the vacuum system is used to evacuate decay storage vessel 1 after washing and dispensing the I-125. It is important that decay storage vessel 1 be free of any water and is evacuated before the irradiated xenon gas is allowed into the vessel. The vacuum system exhausts to the glovebox environment.

10.4.6.5 Sodium Hydroxide (NaOH) Charging and Dispensing System

The NaOH charging and dispensing system is used to recover I-125 from decay storage vessel 1 through the dispensing line and into the I-125 (product) bottle. The charging system is located outside the glovebox and is designed to wash decay storage vessel 1 with a dilute NaOH solution or water. The liquid is pushed through the decay storage vessel 1 tubing using a dry nitrogen gas at a very low pressure (a few psig). The charging system also has a connection to the vacuum system to allow for decay storage vessel 1 to be evacuated after the dispensing operation is completed.

10.4.6.6 Gas Supplies

Three types of gases are used in the I-125 production facility: xenon, dry nitrogen, and helium, each being used for a specific purpose within the facility. Each gas also has its own manifold. Natural xenon gas will be used during the testing of the I-125 production facility, while xenon gas enriched in Xe-124 will be used during production operations. As described previously, the primary containment is designed to accommodate at least three liters of xenon gas. Once xenon is placed within the primary containment, it will only be removed if maintenance is required on the primary containment, or during long periods of inactivity. Helium gas will be used to fill the secondary containment and for operation of any pneumatic valves. Dry nitrogen gas will be used in the charging and dispensing system.

10.4.6.7 Cryogenics

Liquid nitrogen is used to cryogenically move the xenon gas within the primary containment,

for cold trap operation within the vacuum system, and to recover the xenon gas from either the primary or the secondary containment. The liquid nitrogen supply and manifold are located outside the glovebox.

10.4.6.8 Hardware

Hardware items associated with the I-125 production facility are the solenoid valve manifold, the cold finger, decay storage vessel 1, decay storage vessel 2, heat transfer coupling, and the xenon recovery system.

All of the pneumatically-operated valves in the system use helium gas for actuation. The helium gas is routed from the supply to a selected valve using a solenoid valve manifold. The solenoid valve manifold is located within the secondary containment. Solenoid valve actuation is controlled at the control panel. Energizing a solenoid valve allows helium gas to pressurize the pneumatic actuation cylinder of the valve, thus allowing it to open. De-energizing a solenoid valve relieves the pressure to the cylinder allowing the helium gas to escape to the secondary containment.

Cryogenic cooling of the cold finger, decay storage vessel 1 and decay storage vessel 2 is through separate copper coupling feedthroughs in the lower bulkhead of the secondary containment chamber.

Xenon recovery includes both refilling the supply bottle with the xenon remaining within the primary containment and the potential of having to recover xenon from the secondary containment (due to a leak in the primary containment). In either case, recovery will be done by cryogenic cooling which liquefies or solidifys the xenon. During recovery of the xenon from the secondary containment, the helium gas will not condense.

10.4.6.9 Control Panel

A computerized control panel allows for the remote operation of pneumatically-operated valves and for monitoring the pressures and temperatures at various locations in the I-125 production facility. This allows for a simpler and more straightforward operation of the system. All the power for operating the pneumatic valves is through the control panel. A key switch is used to energize the control panel and can be used for selecting the computer monitored mode of operation or manual control.

10.4.6.10 Safety Interlock

Operation of the I-125 production facility consists primarily of operating the controls and observing or recording pressure, vacuum, and temperature readings on the control panel using written and approved procedures. During operation, the control panel computer monitors each of the control switches on the control panel. The computer is also interlocked to the control and can disable a control from becoming active (open a valve, turn on a

heater); however, the computer can never force a control to become active. The operator has complete control when closing a valve or turning off a heater (i.e., placing equipment in a secure mode). As the operator performs the appropriate steps of a given procedure, the computer will monitor which pneumatically-operated valve(s) should be opened or closed for that particular step. While performing each of the steps, if the operator turns any of the control switches other than the ones indicated in the procedure, an alarm will sound. The operator must set the control back to its original position to turn off the alarm. The computer screen will also remind the operator of the correct control to operate. This computer safety interlock ensures that the operator correctly follows the operating procedure.

10.4.6.11 Fume Hood

A fume hood will be located inside the reactor room and will be used primarily during the quality assurance (QA) phase of iodine-125 production. This hood, like the glove box, contains its own ventilation and exhausts through two charcoal filters into the reactor room ventilation line. QA samples removed from the glove box will be placed in the hood, pipetted onto filter papers or other media suitable for counting and then removed from the hood and transferred to the counting area.

## 10.5 Ex-Core In-Tank Facilities

Ex-core in-tank facilities have been established as shown in Figure 10.10. These facilities include the neutron irradiator facility, multiple silicon doping fixtures, and the Argon-41 production facility.

### 10.5.1 Neutron Irradiator Facility

The Neutron Irradiator Facility is used to expose experiments to a high energy neutron environment with minimal thermal neutron and gamma radiation (Figures 10.11 and 10.12). The Neutron Irradiator has four main components: a Conditioning Well, an Exposure Vessel, a Motor Drive Unit, and a Computer. The Conditioning Well is installed inside the reactor tank adjacent to the reflector and consists of boron nitride and lead (for shielding thermal neutrons and gammas respectively) encased in aluminum. The Exposure Vessel (EV) is lowered into the Conditioning Well for irradiation. The EV houses the experiment(s) and contains temperature probes for monitoring the EV internal temperature during irradiation. A 5-piece lead and boron nitride shield assembly placed on top of an assembled EV completes the shielding around the experiment(s). The Motor Drive Unit is mounted at the top of the reactor tank and rotates the exposure vessel to provide a uniform neutron flux distribution. The Computer is connected to the EV and the Motor Drive Unit to monitor temperature and control rotation respectively. The Conditioning Well and Exposure Vessel are described in further detail below.

# CHAPTER 11

# RADIATION PROTECTION AND WASTE MANAGEMENT PROGRAM

Chapter 11 - Valid Pages
Rev. 6 02/--/01

| | | |
|---|---|---|
| i | Rev. 6 | 03/15/01 |
| ii | Rev. 6 | 03/15/01 |
| iii | Rev. 2 | 04/03/98 |
| iv | Rev. 4 | 12/24/99 |
| v | Rev. 6 | 03/15/01 |
| 11-1 | Rev. 2 | 04/03/98 |
| 11-2 | Rev. 2 | 04/03/98 |
| 11-3 | Rev. 4 | 12/24/99 |
| 11-4 | Rev. 2 | 04/03/98 |
| 11-5 | Rev. 4 | 12/24/99 |
| 11-6 | Rev. 2 | 04/03/98 |
| 11-7 | Rev. 2 | 04/03/98 |
| 11-8 | Rev. 6 | 03/15/01 |
| 11-9 | Rev. 3 | 03/15/99 |
| 11-10 | Rev. 3 | 03/15/99 |
| 11-11 | Rev. 2 | 04/03/98 |
| 11-12 | Rev. 6 | 03/15/01 |
| 11-13 | Rev. 6 | 03/15/01 |
| 11-14 | Rev. 2 | 04/03/98 |
| 11-15 | Rev. 4 | 12/24/99 |
| 11-16 | Rev. 4 | 12/24/99 |
| 11-17 | Rev. 4 | 12/24/99 |
| 11-18 | Rev. 5 | 09/01/00 |
| 11-19 | Rev. 2 | 04/03/98 |
| 11-20 | Rev. 4 | 12/24/99 |
| 11-21 | Rev. 4 | 12/24/99 |
| 11-22 | Rev. 4 | 12/24/99 |
| 11-23 | Rev. 2 | 04/03/98 |
| 11-24 | Rev. 2 | 04/03/98 |
| 11-25 | Rev. 2 | 04/03/98 |
| 11-26 | Rev. 6 | 03/15/01 |
| 11-27 | Rev. 2 | 04/03/98 |
| 11-28 | Rev. 2 | 04/03/98 |
| 11-29 | Rev. 4 | 12/24/99 |
| 11-30 | Rev. 2 | 04/03/98 |
| 11-31 | Rev. 2 | 04/03/98 |
| 11-32 | Rev. 2 | 04/03/98 |
| 11-33 | Rev. 2 | 04/03/98 |
| 11-34 | Rev. 2 | 04/03/98 |
| 11-35 | Rev. 2 | 04/03/98 |
| 11-36 | Rev. 2 | 04/03/98 |
| 11-37 | Rev. 2 | 04/03/98 |
| 11-38 | Rev. 2 | 04/03/98 |
| 11-39 | Rev. 2 | 04/03/98 |
| 11-40 | Rev. 2 | 04/03/98 |
| 11-41 | Rev. 2 | 04/03/98 |
| 11-42 | Rev. 2 | 04/03/98 |
| 11-43 | Rev. 2 | 04/03/98 |
| 11-44 | Rev. 2 | 04/03/98 |
| 11-45 | Rev. 4 | 12/24/99 |
| 11-46 | Rev. 5 | 09/01/00 |
| 11-47 | Rev. 2 | 04/03/98 |
| 11-48 | Rev. 6 | 03/15/01 |
| 11-49 | Rev. 6 | 03/15/01 |
| 11-50 | Rev. 2 | 04/03/98 |
| 11-51 | Rev. 4 | 12/24/99 |
| 11-52 | Rev. 2 | 04/03/98 |
| 11-53 | Rev. 4 | 12/24/99 |
| 11-54 | Rev. 4 | 12/24/99 |
| 11-55 | Rev. 4 | 12/24/99 |
| 11-56 | Rev. 4 | 12/24/99 |
| 11-57 | Rev. 4 | 12/24/99 |
| 11-58 | Rev. 4 | 12/24/99 |

TABLE OF CONTENTS

## REFERENCES


11.1 United States Nuclear Regulatory Commission, Title 10, Rules and Regulations, Part 20, Standards for Protection Against Radiation, Washington, D.C.

11.2 Kocher, D. C., "Dose-Rate Conversion Factors for External Exposure to Photons and Electrons," Health Physics 45, pp. 665-686, 1983.

11.3 CAP88-PC, Clean Air Act Assessment Package-1988, Version 1.0, United States Environmental Protection Agency, 1988.

11.4 ANSI/ANS-15.11, "Radiation Protection at Research Reactor Facilities," 1995.

11.5 Emmett, M. B., "The MORSE Monte Carlo Radiation Transport Code System," ORNL-4972 (February 1975), Department of Energy, Oak Ridge National Laboratory.

11.6 Engle, W. W., Jr., "ANISN, A One-Dimensional Discrete Ordinates Transport Code with Anisotropic Scattering," K-1693 (March 1967), Department of Energy, Oak Ridge National Laboratory.

11.7 Nuclear Engineering Handbook, Harold Etherington, McGraw Hill Publishers, 1958.

11.8 Utilization of the University of California - Davis/McClellan Nuclear Radiation Center (UCD/MNRC) Research Reactor Facility, MNRC-0027-DOC, March 1999.

11.9 United States Nuclear Regulatory Commission, Regulatory Guide 8.20, "Application of Bioassay for Iodine-125 and Iodine-131," Revision 1, September 1979.

11.1.1.1.5 Production and Evolution of N-16 in the Reactor Room

In addition to Ar-41, the other source of airborne radioactivity during normal operation of the MNRC reactor is Nitrogen-16 (N-16). N-16 is generated by the reaction of fast neutrons with Oxygen-16 (O-16) in water passing through the core. The amount of oxygen present in air, either in a beam path or entrained in the water near the reactor core, is insignificant compared to the amount of oxygen in the water molecule in the liquid state. Production of N-16 resulting from neutron interactions with the oxygen in air and air entrained in the cooling water can therefore be neglected.

The cross-section energy threshold for the O-16 (n,p) N-16 reaction is 9.4 MeV; however, the minimum energy of the incident neutrons must be about 10 MeV because of center of mass corrections. This high energy threshold limits the production of N-16, since only about 0.1% of all fission neutrons have an energy in excess of 10 MeV. Moreover, a single hydrogen scattering event will reduce the energy of these high-energy neutrons to below the necessary threshold.

After N-16 is produced in the core region, it rises to the tank surface and forms a disc source which creates a direct radiation field near the top of the tank. Some of the N-16 is subsequently released into the reactor room. Calculations for the production and mixing of N-16 in the primary coolant and for the evolution of N-16 from the reactor tank into the reactor room air are presented in Appendix A. Radiation levels associated with the N-16 in the tank and in the reactor room air are also addressed as part of Appendix A. Without exception, the calculated N-16 concentrations and dose rates are very conservative because they do not assume use of the conventional in-tank N-16 diffuser system, which is present in the MNRC primary water circulation system. Since this diffuser system is used during all normal operation of the reactor, and is designed to significantly delay the N-16 transit time to the upper regions of the tank, the 7.14 second N-16 half-life brings about considerable decay and a corresponding reduction in N-16 radiation levels at the tank surface and in the reactor room itself.

Recognizing the conservatisms involved in the N-16 calculations, and assuming the diffuser system is off, it is possible to predict the dose rate from N-16 at the tank water surface at a 2 MW power level. Using the technique shown in Appendix A, this value turns out to be approximately 1350 millirem per hour. This value agrees very well with the "diffuser off" N-16 dose rate measured at the surface of the tank water at the MNRC reactor and with N-16 dose rates measured at several other comparable 1 MW TRIGA® reactors, after the 1 MW values were extrapolated to 2 MW (Section 11.1.5.1, Table 11-7).

Since operation with the diffuser off is not a normal mode of operation, it is more realistic to estimate N-16 dose rates over the reactor tank with the diffuser on. Calculation of these dose rates would be difficult without knowing the actual effect of the diffuser in the presence of the new 2 MW coolant flow rates. Therefore, estimates of N-16 dose rates are based on extrapolations of actual dose rate measurements at about 1 foot and 3 feet over the

UCD/MNRC reactor tank at 1 MW with the diffuser on. Using this approach, the predicted 2 MW N-16 dose rate at 1 foot over the tank water surface will be about of 60 millirem per hour and at 3 feet about 10 millirem per hour.

The escape of N-16 into the reactor room air will also deliver a radiation dose to workers in the room based on the N-16 concentration, which will be influenced by dilution in room air, by decay of this short-lived radionuclide and by room ventilation. Once again assuming the diffuser is off, by referring to the calculations in Appendix A and by using the volume of the reactor room with its current 800 cubic feet per minute ventilation rate, a conservative reactor room N-16 concentration of $1.4 \times 10^{-4}$ μCi/ml is predicted. As with Ar-41, the reactor room volume is not large enough to create a semi-infinite cloud geometry for N-16, and therefore the calculated dose rate from the preceding N-16 concentration, when it is distributed uniformly throughout the room, is about 7.7 millirem per hour near the center of the room. Because of its short half-life and the reactor room ventilation pattern, even given the fact that the N-16 diffuser is assumed to be off, it is very unlikely that N-16 will ever reach a uniform concentration of $1.4 \times 10^{-4}$ μCi/ml in the room. Therefore, the actual dose rate from N-16 in the reactor room is expected to be considerably lower than this worst case estimate. Although some N-16 may be removed from the reactor room by the ventilation system, the N-16 contribution to dose rates in the unrestricted area is negligible because of its rapid decay.

11.1.1.1.6 Ar-41 from the Ar-41 Production Facility

Ar-41 will be produced by the Ar-41 Production Facility (see Chapter 10) as needed. The Ar-41 that is produced by the Ar-41 Production Facility will be contained in the system so there should be no increase in the Ar-41 levels in the reactor room or the Ar-41 that is released to the unrestricted area. Catastrophic failure of the system will not result in any 10 CFR 20 limit being exceeded and is further discussed in Chapter 13.

11.1.1.2 Liquid Radioactive Sources

Liquid radioactive material routinely produced as part of the normal operation of the UCD/MNRC includes up to 20-curie batches of iodine-125 as a sodium iodide solution. This material is packaged as a liquid and shipped to off-site users in an appropriate DOT container. Residual iodine-125 liquids from the production and quality assurance processes will be collected and sealed in metal containers for storage and decay, or feasible disposal by appropriate means.

There will also be miscellaneous neutron activation product impurities in the primary coolant, most of which are deposited in the mechanical filter and the demineralizer resins. Therefore, these materials are dealt with as solid waste (Section 11.1.1.3, Table 11-5). Non-routine liquid radioactive waste could result from decontamination or maintenance activities (i.e., filter or resin changes). The amount of this type of liquid waste is expected to remain small, especially based on past experience. Because of this, the liquid will be processed to a solid waste form on site and will be disposed of with other solid wastes.

| Source Description | Radionuclide(s) | Nominal Activity (Ci) | Physical Characteristics | wt % Uranium | Approximate Original Total Grams | |
|---|---|---|---|---|---|---|
| | | | | | U-235 | Total U |
| 45 TRIGA® Fuel Elements | Enriched Uranium | | In 2 MW Core | 8.5 | 1710 | 8640 |
| 44 TRIGA® Fuel Elements | Enriched Uranium | | In 2 MW Core | 20 | 4268 | 21,120 |
| 5 TRIGA® Fuel Followed Control Rods | Enriched Uranium | | In 2 MW Core | 8.5 | 190 | 960 |
| 43 TRIGA® Fuel Elements | Enriched Uranium | | Irradiated - In Fuel Pit Storage | 8.5 | 1634 | 10,752 |
| 2 Instrumented TRIGA® Fuel Elements | Enriched Uranium | | Irradiated - In Fuel Pit Storage | 8.5 | 76 | 304 |
| 25 TRIGA® Fuel Elements | Enriched Uranium | | New - In Storage | 20 | 2425 | 12,000 |
| 1 Instrumented TRIGA® Fuel Element | Enriched Uranium | | New - In Storage | 20 | 97 | 480 |
| 3 TRIGA® Fuel Followed Control Rods | Enriched Uranium | | New - In Storage | 20 | 291 | 1,440 |
| 3 Fission Chambers | Enriched Uranium | | In 2 MW Core (1)<br>In Storage (2) | 93 | 1.40<br>2.60 | 1.50<br>2.80 |
| Reactor Startup Source | Am-241 | 4.0 Ci | In 2 MW Core; Sealed Source | | | |
| Instrument Calibration Source | Cs-137 | 0.055 Ci | Sealed Source | | | |
| Small Instrument Calibration and Check Sources | Cl-36, Cs-137, Ba-133, Co-60, & multinuclide sources | $<10^{-4}$ Ci each | Planchets, Filter Papers, Plated, Plastic Buttons, Resin matrix, etc. | | | |
| Janus Plates | Enriched Uranium | | 16 Flat Plates 39" × 4" × .098" | 20 | 16,090 | 80,450 |

Table 11-5 Representative Radioactive Sources for the MNRC 2 MW Reactor Program

| Source Description | Radionuclide(s) | Nominal Activity (Ci) | Physical Characteristics | wt % Uranium | Approximate Original Total Grams | |
|---|---|---|---|---|---|---|
| | | | | | U-235 | Total U |
| Silicon Ingot (typical) | P-32<br>Cr-51<br>Na-24<br>Au-198<br>Ag-110m<br>Zn-65 | $6.3 \times 10^{-5}$ Ci<br>$1.0 \times 10^{-5}$ Ci<br>$0.7 \times 10^{-5}$ Ci<br>$0.3 \times 10^{-5}$ Ci<br>$0.1 \times 10^{-5}$ Ci<br>$0.1 \times 10^{-5}$ Ci | Unsealed irradiated ingot; activity typical at time of handling | | | |
| Irradiated Items and Materials | Mixed Activation Products | $10^{-6}$ Ci to Ci levels | Unsealed items irradiated in pneumatic transfer system & other in-core irradiation facilities | | | |
| Irradiated Aircraft Components | Al-28<br>Mn-56<br>Cu-64<br>Cu-66 | $10^{-5}$ to $10^{-6}$ Ci | Unsealed irradiated aircraft components subjected to neutron radiography | | | |
| Demineralizer Resins | Na-24<br>Mn-56 & other mixed activation products from the primary coolant | $10^{-2}$ to $10^{-3}$ Ci | Sealed disposable resin bottles | | | |
| Solid Waste | Co-58, Co-60, Mn-54, and other mixed activation products | $4 \times 10^{-3}$ Ci | 1 - 55 gallon drum @ 7.5 cubic feet<br>6 resin bottles @ 2.0 cubic feet each*<br>Total annual waste volume: ~20 cubic feet | | | |
| Argon-41 gas (Individual quantities produced for shipment to users) | Ar-41 | up to 4.0 Ci per shipment | Ar-41 gas | | | |
| Iodine-125 liquid, as sodium iodide (Individual quantities produced for shipment to users) | I-125 | up to 20.0 Ci per shipment | Liquid sodium iodide solution | | | |

Table 11-5 Representative Radioactive Sources for the UCD/MNRC 2 MW Reactor Program (Continued) (* Due to removal of radioactivity in the reactor primary coolant by the water purification system)

Although solid waste is included in the preceding table, more information on waste classification, storage, packaging and shipment is included in Section 11.2. In an effort to elaborate somewhat on the waste entry in Table 11-5, it can be stated that routinely produced solid waste includes water purification system demineralizer resin bottles, mechanical filters, rags, paper towels, plastic bags, rubber gloves, and other materials used for contamination control or decontamination. The radioactivity level of this material is normally in the microcurie range, and it is anticipated that approximately one (or two) regular 55 gallon drums of this type of material and 6 resin bottles will be generated each year.

11.1.1.3.1 Shielding Logic

Although not a solid source of radioactivity itself, shielding is involved in reducing radiation levels from many solid sources and therefore the basic logic used for the 2 MW shielding is included here. The logic and bases used for the MNRC 2 MW shielding design is directly related to that employed for the original 1 MW design and includes the following: (NOTE: There is a much more detailed discussion of shielding in Section 11.1.5.1)

- General Atomic has developed source terms to serve as a basis for reactor shielding design analysis. Radiation levels for a 1 MW TRIGA® shield based on these analyses are shown in Figure 11.1. For 2 MW operations, dose rates approximately twice the values in Figure 11.1 can be expected;

- Reactor shields for 1 MW TRIGA® reactors have been built and proven based on the preceding design analysis. Actual radiation measurements at the surface of this type of shielding at 1 MW have shown radiation levels to about one millirem/hr or less. Therefore, for 2 MW, most radiation levels should be in the one to two millirem/hr range, which is still quite low;

- The MNRC reactor bulk shield is very similar, in material type and thickness, to other proven TRIGA® shields. Two significant differences are the beam tube penetrations. Where the basic shielding configuration has been penetrated by beam tubes, supplemental shielding was added. This supplemental shielding has been designed to provide the same attenuation to both neutrons and gammas as the basic unpenetrated shield. The second is the Bay 5 cavity described in Section 1.2.1. The radiation levels at the surface of the biological shield as a result of the cavity cut are .35 mR/hr $\gamma$ and < 1 mrem/hr n on contact.

11.1.2 Radiation Protection Program

The health physics program for the UCD/MNRC reactor is located organizationally within the UCD/MNRC. The organizational structure and reporting pathways relating to the UCD/MNRC radiation protection program are shown in Figures 11.2 and 11.3.

11.1.2.1 Organization of the Health Physics Branch

The Health Physics Branch within UCD/MNRC is the organization that administers the radiation protection program for the reactor.

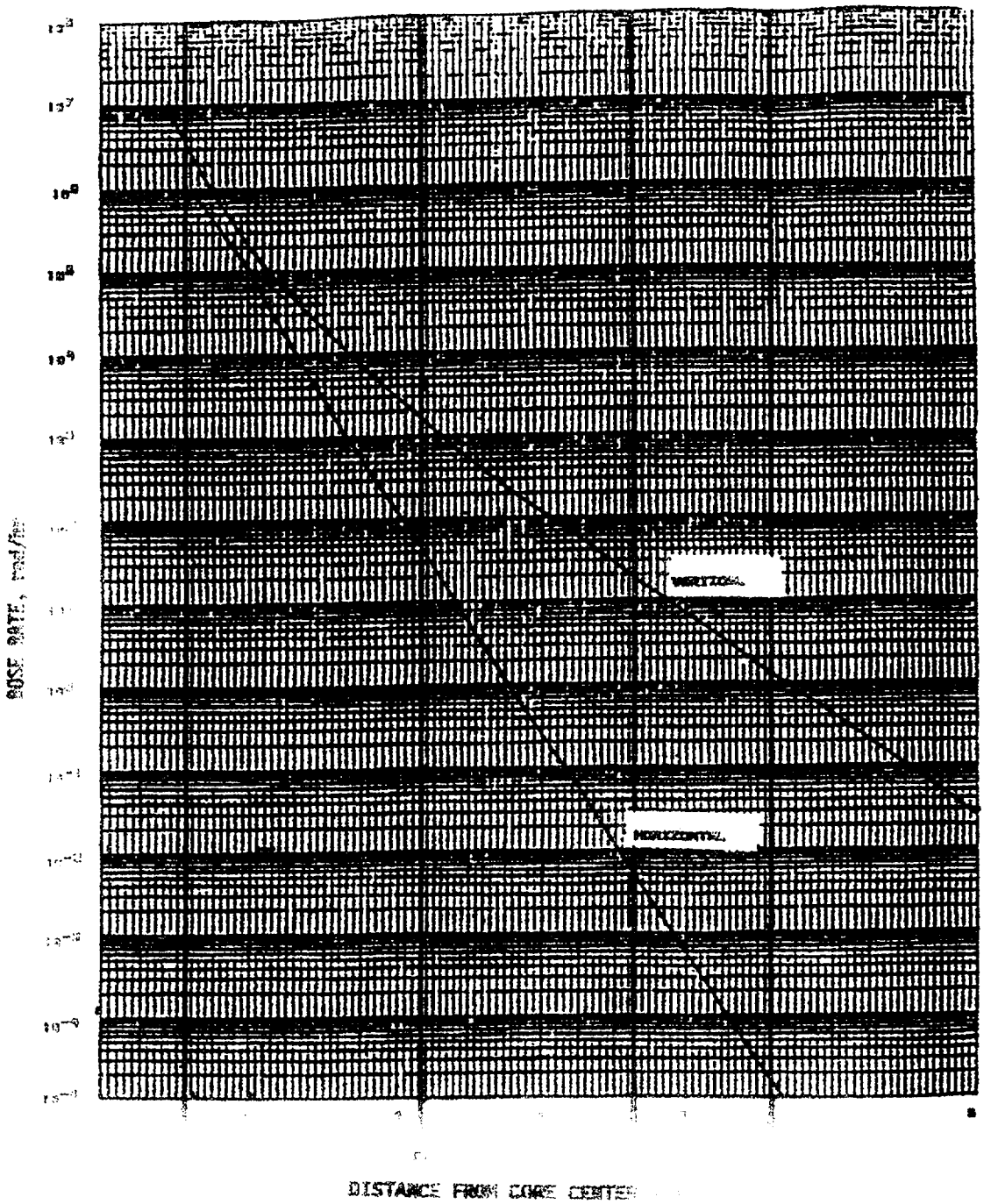


Core Boundary

C&D Biological Shield

REACTOR BULK SHIELD DIRECT DOSE RATE - 1 MW OPERATION
FIGURE 11.1

8. Surveys as part of the following operations:

   a. Decontamination of equipment;

   b. Removal of irradiated parts or equipment from a radiography bay, from the reactor core, from a fuel storage pit, from the pneumatic transfer system terminal, from the reactor room, or from the MNRC facility;

   c. Inspection, maintenance, or repair of the primary cooling system;

   d. Initial opening of the secondary cooling system for inspection, maintenance, or repair;

   e. When working in or entering areas where radioactive leaks or airborne radioactivity has occurred previously;

   f. Upon initial entry into potentially contaminated exhaust ventilation ducting;

   g. Prior to replacing filters or ducting in potentially contaminated exhaust ventilation systems.

11.1.4.2 Radiation Monitoring Equipment

Radiation Monitoring equipment used in the MNRC reactor program is summarized in Table 11-6. The locations of many of the pieces of equipment are shown in Figures 11.4 and 11.5. Because equipment is updated and replaced as technology and performance requires, the equipment in Table 11-6 should be considered representative rather than an exact listing. The function this equipment performs will remain the same.

| Table 11-6 Radiation Monitoring and Related Equipment Used in the MNRC Radiation Protection Program | | |
|---|---|---|
| **ITEM** | **LOCATION** | **FUNCTION** |
| Continuous Air Monitors (4)<br>• Stack Effluent Monitor<br>• Reactor Room Air<br>• Radiography Bays Air<br><br>• I-125 Reactor Room Exhaust | <br>CAM Room<br>CAM Room<br>Sample Preparation Area<br><br>Equipment Room | <br>Measure radioactivity in stack effluent<br>Measure reactor room airborne radioactivity<br>Measure radiography bay airborne radioactivity<br>(All monitors measure gas & particulate)<br>Measure I-125 in reactor room exhaust |
| Radiation Area Monitors (6) | Staging Area No. 1<br>Staging Area No. 2<br>Staging Area No. 4<br>Equipment Room<br>Demineralizer Area<br>Reactor Room | Measure gamma radiation fields in occupied or accessible areas of the MNRC facility |
| Portable Ionization Chamber Survey Meters (3) | Staging Area No. 1<br>Staging Area No. 4<br>Sample Preparation Area | Measure beta-gamma radiation dose rates |
| Portable Neutron Survey Meters (2) | Staging Area No. 1<br>Sample Preparation Area | Measure neutron radiation dose rates |
| Portable MicroR Survey Meters (2) | Staging Area No. 1 | Measure low level and environmental gamma radiation dose rates |
| Portable G-M Survey Meters (4) | Staging Area No. 1<br>Staging Area No. 4<br>Sample Preparation Area<br>Health Physics Lab | Measure beta/gamma contamination levels |
| Portable Alpha Survey Meters (2) | Staging Area No. 1 | Measure alpha contamination levels |
| Lab Swipe Counter (1) | Health Physics Lab | Measure alpha/beta contamination on swipes |
| Gamma Spectroscopy Systems (HPGe) (4) | Health Physics Lab | Gamma Spectroscopy |
| Hand and Foot Monitors (4) | Staging Area No. 1 Exit<br>Staging Area No. 2 Exit<br>Staging Area No. 4 Exit<br>Equipment Room Exit | Measure potential contamination on hands and feet prior to leaving radiation restricted areas |
| Direct Reading Pocket Dosimeters (20) | Staging Area No. 1 | Measure personnel gamma dose |
| Environmental TLDs | Various on-site, on-base, and off-base locations | Measure environmental gamma radiation doses |
| Portable Air Sampler (1) | Staging Area No. 1 | Collect grab air samples |
| Air Flow Velometer (1) | Sample Preparation Area | Measure ventilation flow rates |
| Air Flow Calibrator (1) | Health Physics Lab | Calibrate CAM air flows |
| Thyroid Counter (1) (NaI) | Health Physics Lab | Measure uptake of radioiodine in the thyroid gland |

| Item | Use - Routine (R)<br>- Emergency (E) |
|---|---|
| Lab Coat | R & E |
| Rubber Gloves | R & E |
| Latex Examination Gloves | R & E |
| Safety Glasses | R & E |
| Face Shields | R & E |
| Coveralls | R & E |
| Hoods/Caps | R & E |
| Plastic Shoe Covers | R & E |
| Rubber Over Shoes | E |
| Small Spill Kits | E |
| Large Spill Kits | E |
| Decontamination Locker | E |
| Decontamination Shower | E |
| Decontamination Sink | E |

Table 11-10 Summary of Typical Protective Equipment Used in the MNRC Radiation Protection Program

11.1.5.5.1 Respiratory Protection Equipment

Other than Ar-41 and N-16, no airborne radioactivity is expected to occur at the MNRC as part of normal operations. Consequently, respiratory protection equipment is not part of the protective equipment typically used at the MNRC. Should the situation change and respiratory protection become necessary in order to meet ALARA objectives, the MNRC will implement a respiratory protection program in accordance with Subpart H of 10 CFR 20.

11.1.5.5.2 Personnel Dosimetry Devices

Personnel dosimetry devices in use at the MNRC have been selected to provide monitoring of all radiation categories likely to be encountered. Table 11-11 summarizes the devices typically used.

Table 11-11 Typical Personnel Monitoring Devices Used at the UCD/MNRC

| Type | Dose | Radiation Measured |
|---|---|---|
| TLD | Deep Dose Equivalent<br>Eye Dose Equivalent<br>Shallow Dose Equivalent | Beta, Gamma |
| Albedo TLD | Deep Dose Equivalent | Thermal Neutrons |
| TLD Finger Ring | Extremity Dose Equivalent | Beta, Gamma |
| CR-39 Track Etch | Deep Dose Equivalent | Fast Neutrons |

Personnel dosimeters are changed monthly. An administrative action level of 100 millirem in one month or 300 millirem in one quarter has been established. An exposure investigation is required if any action level is exceeded in order to determine the source of the exposure. This is part of the MNRC ALARA program described previously (Section 11.1.3).

The production of I-125 is the only routine operation at the UCD/MNRC that presents a potential for internal deposition of a radionuclide. While the potential for uptake of I-125 due to normal routine production operations is considered to be quite small, the UCD/MNRC has an established bioassay program based on thyroid counting as part of the routine personnel monitoring program. This counting program is designed to detect, in a timely manner, the uptake of I-125 at very low levels in individuals who might be occupationally exposed to I-125 at the UCD/MNRC. Data from this program will also allow the determination of the committed dose equivalent to the thyroid and the committed effective dose equivalent so that compliance with dose limits in 10 CFR 20 can be clearly documented. The monitoring program focused on radioiodine uptake involves thyroid counting frequencies and other applicable recommendations found in NRC Regulatory Guide No. 8.20, entitled, Applications of Bioassay for Iodine-125 and Iodine-131 (Reference 11.9).

As noted above, other than the production of iodine-125, there are no routine operations at the UCD/MNRC which present a potential for internal deposition of radionuclides. Nevertheless, at the present time, UCD/MNRC employees annually obtain a whole body count as part of the routine personnel monitoring program.

Personnel exposure reports are maintained by the Health Physics Branch and are retained for the life of the facility. In addition, radiological survey data sheets which document worksite radiological conditions are maintained by the Health Physics Branch and are retained for the life of the facility.

The average annual occupational whole body exposure (Deep Dose Equivalent) for 2 MW operations for 1998 was 217 millirem. The average annual extremity and eye dose for 2 MW operations for 1998 was 181 and 195 millirem, respectively. These doses are not expected to change significantly and are well below 10 CFR 20 limits.

11.1.5.6 Estimated Annual Radiation Exposure

The guidelines for radiation doses and for airborne concentrations of radionuclides during normal operations of the MNRC are contained in 10 CFR 20. These guidelines establish levels for both "restricted" and "unrestricted" areas. With respect to the MNRC, the

"restricted" area is considered to be all locations within the operations boundary (within the UCD/MNRC perimeter fence). The "unrestricted" area includes all locations and the personnel outside the operations boundary. The following sections contain an estimate of annual radiation exposure in these two areas.

11.1.5.6.1 Estimated Annual Doses in the Restricted Area

Although the UCD/MNRC will be operating an estimated three shifts/day, seven days/wk, 45 wks/yr (7560 hrs), it is assumed that an individual working at the UCD/MNRC will be in the facility only one shift/day (40 hrs/wk). Further, it is assumed that an occupationally exposed individual will only spend a fraction of the time in areas where there is a potential for significant radiation levels (within the radiography bays, the demineralizer cubicle, or in the reactor room). Therefore, the predicted occupational doses are based on an estimate of the actual time an individual will spend in areas where there are measurable radiation levels. Also, radiation surveys of the UCD/MNRC facility within the restricted area have been made repeatedly during 1 MW operations and there is a great deal of actual personnel dosimetry data to use as a basis for future dose estimates. Where radiation dose rate measurements and actual personnel doses were available, they were included in the following discussions.

Radiation levels outside the radiography bays in the staging areas are typically less than 0.4 millirem/hr with the reactor operating at 1 MW. However, at 2 MW the expected level will be about 0.2 millirem/hour due to the previously mentioned reduction in beam intensity. If personnel were exposed to these levels for 20 hr/wk for 50 weeks during the year the annual Total Effective Dose Equivalent (TEDE) would be 200 millirem, which is well below the 10 CFR 20 annual occupational dose limit. Radiation levels are higher (1-3 millirem/hr) immediately outside the radiography bay walls which contain the beam stops. However, personnel doses from these areas are still expected to be very low (less than 2 millirem/wk) because personnel spend less than 1 hr/wk in these areas.

Radiation levels are high in the radiography bays when the neutron shutters and gamma shields are open and the reactor is operating. However, personnel are restricted from these areas anytime the shutters are open and the reactor is operating. Radiation levels in bays adjacent to an operating bay are 1 to 2 millirem/hr at 1 MW and are expected to be less than half of these levels at 2 MW for reasons already stated.

A prediction of the dose rates from typical aircraft materials activated in the neutron beams was made in Appendix A. The predicted dose rate from an aluminum plate being radiographed using film techniques or from an entire wing scanned for 8 hrs using electronic imaging devices is less than 1 millirem/hr at five feet if a 30 min period is allowed for the aluminum to decay. The radiation levels from these components when compared to those discussed above will be insignificant since exposure times will be short. These components may need to be stored in an isolated area for a few days for all activity to decay.

The radiation exposures from activation products in the shutter bulk shield will be less than 1 mrem since nearly all of the activity is in the first 12 inches of the shield leaving 36 inches of high density material for attenuation. However, during decommissioning, the shield will have to be handled as low-level radioactive waste due to induced gamma emitting radionuclides, and more importantly, due to the long-lived non-gamma emitters, such as $^{55}Fe$, which has a 2.7 year half-life.

The total effective dose equivalent from Ar-41 in the radiography bays was predicted in Appendix A. Using the highest Ar-41 concentration for 2000 hours of annual exposure will result in an annual TEDE of only 0.5 millirem. Nevertheless, the exposure of personnel working in radiography bays will be closely monitored so that guideline levels are not exceeded and exposure to all individuals is kept as-low-as-reasonably-achievable.

The predicted radiation levels in the reactor room from Ar-41 and N-16, with the reactor operating at 2 MW, has been discussed in Appendix A and Section 11.1.1.1. The expected radiation level (due primarily to N-16) is about 60 millirem per hour at one foot over the tank and about 10 millirem per hour at 3 feet above the tank, but these levels drop rapidly at the tank's edge.

Radiation doses in the reactor room away from the tank will be mainly from airborne N-16 and Ar-41. The predicted 2 MW concentrations of N-16 and Ar-41 with the reactor room exhaust system operating <u>but with the diffuser system OFF</u> are $1.4 \times 10^{-4}$ $\mu$Ci/ml and $5.22 \times 10^{-6}$ $\mu$Ci/ml, respectively (Appendix A and Section 11.1.1). The predicted whole body (immersion) dose rate from these two isotopes is 7.8 millirem per hour, with N-16 contributing nearly all of the dose rate (7.7 millirem per hour). In actual practice, however, the radiation levels from these two radionuclides will be considerably less than predicted, since the diffuser will be operating and the N-16 contribution will therefore be lower by about one order of magnitude. General reactor room radiation measurements have been made with the reactor operating at 1 MW. The radiation level from all sources about 3 feet above floor level (not over the tank) is approximately 1.0 millirem per hour at 1 MW. Therefore, it is expected that this level will be 2.0 millirem per hour or less when the power level is raised to 2 MW. Although these are relatively low radiation levels, access to the reactor room will still be controlled and personnel exposures closely monitored.

Maintenance of equipment located in the reactor room, such as control rod drives, instrumentation, and primary water system components, will not be allowed when the reactor is operating. Therefore, it is estimated that personnel exposures from this type of activity will be insignificant.

Handling and inspection of MNRC fuel is accomplished in the reactor tank (with the reactor shut down). Removing or replacing fuel elements, either in the core or in the in-tank storage racks, requires that the element be raised in the vertical direction far enough to clear the grid plate/reflector or storage racks. However, with the fuel element at its highest point, it is still covered by about 15 ft of water and the radiation level at the tank surface is insignificant.

Should it be necessary to remove a fuel element from the tank after operation, it will normally be moved from the core and placed in the in-tank storage rack. It is anticipated that removal of most irradiated fuel elements from the tank will be carried out using the fuel

# CHAPTER 13

# ACCIDENT ANALYSIS

Chapter 13 - Valid Pages
Rev. 6 02/--/01

| | | |
|---|---|---|
| i | Rev. 2 | 04/03/98 |
| ii | Rev. 6 | 03/15/01 |
| iii | Rev. 4 | 12/24/99 |
| iv | Rev. 2 | 04/03/98 |
| v | Rev. 6 | 03/15/01 |
| 13-1 | Rev. 4 | 12/24/99 |
| 13-2 | Rev. 4 | 12/24/99 |
| 13-3 | Rev. 4 | 12/24/99 |
| 13-4 | Rev. 4 | 12/24/99 |
| 13-5 | Rev. 4 | 12/24/99 |
| 13-6 | Rev. 2 | 04/03/98 |
| 13-7 | Rev. 2 | 04/03/98 |
| 13-8 | Rev. 2 | 04/03/98 |
| 13-9 | Rev. 4 | 12/24/99 |
| 13-10 | Rev. 2 | 04/03/98 |
| 13-11 | Rev. 4 | 12/24/99 |
| 13-12 | Rev. 4 | 12/24/99 |
| 13-13 | Rev. 4 | 12/24/99 |
| 13-14 | Rev. 4 | 12/24/99 |
| 13-15 | Rev. 2 | 04/03/98 |
| 13-16 | Rev. 2 | 04/03/98 |
| 13-17 | Rev. 2 | 04/03/98 |
| 13-18 | Rev. 2 | 04/03/98 |
| 13-19 | Rev. 2 | 04/03/98 |
| 13-20 | Rev. 4 | 12/24/99 |
| 13-21 | Rev. 2 | 04/03/98 |
| 13-22 | Rev. 2 | 04/03/98 |
| 13-23 | Rev. 2 | 04/03/98 |
| 13-24 | Rev. 4 | 12/24/99 |
| 13-25 | Rev. 2 | 04/03/98 |
| 13-26 | Rev. 2 | 04/03/98 |
| 13-27 | Rev. 4 | 12/24/99 |
| 13-28 | Rev. 2 | 04/03/98 |
| 13-29 | Rev. 4 | 12/24/99 |
| 13-30 | Rev. 4 | 12/24/99 |
| 13-31 | Rev. 2 | 04/03/98 |
| 13-32 | Rev. 4 | 12/24/99 |
| 13-33 | Rev. 4 | 12/24/99 |
| 13-34 | Rev. 4 | 12/24/99 |
| 13-35 | Rev. 4 | 12/24/99 |
| 13-36 | Rev. 4 | 12/24/99 |
| 13-37 | Rev. 4 | 12/24/99 |
| 13-38 | Rev. 6 | 03/15/01 |
| 13-39 | Rev. 2 | 04/03/98 |
| 13-40 | Rev. 2 | 04/03/98 |
| 13-41 | Rev. 4 | 12/24/99 |
| 13-42 | Rev. 4 | 12/24/99 |
| 13-43 | Rev. 3 | 03/15/99 |
| 13-44 | Rev. 3 | 03/15/99 |
| 13-45 | Rev. 6 | 03/15/01 |
| 13-46 | Rev. 6 | 03/15/01 |
| 13-47 | Rev. 6 | 03/15/01 |
| 13-48 | Rev. 6 | 03/15/01 |
| 13-49 | Rev. 6 | 03/15/01 |
| 13-50 | Rev. 6 | 03/15/01 |
| 13-51 | Rev. 6 | 03/15/01 |
| 13-52 | Rev. 6 | 03/15/01 |
| 13-53 | Rev. 6 | 03/15/01 |
| 13-54 | Rev. 6 | 03/15/01 |
| 13-55 | Rev. 6 | 03/15/01 |
| 13-56 | Rev. 6 | 03/15/01 |
| 13-57 | Rev. 6 | 03/15/01 |
| 13-58 | Rev. 6 | 03/15/01 |

TABLE OF CONTENTS

## LIST OF FIGURES

13.14 Engineering Science, 1983, "Final Report Installation Restoration Program, Phase II, ...Confirmation," Vol. 1, June, Prepared for the U.S. Air Force, McClellan Air Force Base, Sacramento, CA.

13.15 Safety Analysis Report, TRIGA® Reactor Facility, University of Texas at Austin, May 1991.

13.16 10 CFR 50.59 Safety Analysis of Explosive Limits for Radiography Bays 1, 2, 3, and 4, McClellan Nuclear Radiation Center, Sacramento, CA., 1996.

13.17 Southwest Research Institute, "Safety Analysis To Determine Limiting Criteria for Explosives in Bay 3 of the McClellan Nuclear Radiation Center," September 1995.

13.18 Liu, H. Ben, "Safety Analysis for the Central Irradiation Facility (CIF) at the MNRC," Memorandum to Wade J. Richards, September 22, 1998.

13.19 Strohmayer, W.H., and M.G. Stamatelatos, "Probabilistic Assessment of the Airplane Crash Risk for the McClellan Air Force Base TRIGA® Reactor," G.A. Technologies, March 1986.

13.20 Liu, H. Ben, "Safety Analysis for I-125 Production at the UCD/MNRC," Memorandum to Dan Newell, November 14, 2000.

13.21 EPA 520/1-88-020, Federal Guidance Report No. 11, "Limiting Values of Radionuclide Intake and Air Concentration and Dose Conversion Factors for Inhalation, Submersion and Ingestion," U.S. Environmental Protection Agency, September 1988.

The RELAP5 steady-state thermal-hydraulic analysis described in Section 4.6 was repeated with the nominal inlet temperature (32.2 °C) and the peak element power increased to 40 kW (core radial peaking factor increased to 2.0). The peak fuel temperature was 734°C, which is still below the operational safety limit (the LCO) of 750°C. The critical heat flux ratio was 2.6, indicating that there is still ample margin before film boiling. Since the hot channel outlet void fraction was 5% and the core outlet subcooling was 8°C, it appears unlikely that any detectable chugging will occur. Should chugging occur, it will be easily detected and appropriate operational constraints established.

Operation in pulse mode with the maximum allowed reactivity insertion, $1.75, and the above loading error was also considered. The core-average fuel ΔT with this insertion is 161 °C. The four factors used to produce the total peaking factor were:

- Core radial peaking factor of 2.0, based on a peak element power of 40 kW;
- Axial and pin tilt factors of 1.27 and 1.5, respectively, from the worst MixJ Core in Section 4.3.3.7;
- 1.33 pin radial peaking factor, since the erroneously loaded fuel is the 20/20 type.

This leads to a peak fuel temperature of 837 °C, well below the 1100°C pulsing limit. Thus, pulse operation is also predicted to be benign.

### 13.2.6 Experiment Malfunction

#### 13.2.6.1 Accident Initiating Events and Scenario

Improperly controlled experiments involving the UCD/MNRC reactor could potentially result in damage to the reactor, unnecessary radiation exposure to facility staff and members of the general public, and unnecessary releases of radioactivity into the unrestricted area. Mechanisms for these occurrences include the production of excess amounts of radionuclides with unexpected radiation levels, and creation of unplanned for pressures in irradiated materials which subsequently vent into reactor irradiation facilities or into the reactor building causing damage from the pressure release or an uncontrolled release of radioactivity. Other mechanisms for damage, such as corrosion and large reactivity changes, are also possible.

#### 13.2.6.2 Accident Analysis and Determination of Consequences

Because of the potential for accidents which could damage the reactor if experiments are not properly controlled, there are strict procedural and regulatory requirements addressing experiment review and approval (Chapter 10). These requirements are focused on ensuring that experiments will not fail, but they also incorporate requirements to assure that there is no reactor damage and no radioactivity releases or radiation doses which exceed the limits of 10 CFR Part 20, should failure occur. For example, specific requirements in UCD/MNRC administrative procedures such as the Utilization of the University of California

- Davis/McClellan Nuclear Radiation Center Research Reactor Facility (MNRC-0027) (Reference 11.7) establish detailed administrative procedures, technical requirements, and the need for safety reviews for all types of proposed reactor experiments.

Safety related reviews of proposed experiments usually require the performance of specific safety analyses of proposed activities to assess such things as generation of radionuclides and fission products (i.e., radioiodines), and to ensure evaluation of reactivity worth, chemical and physical characteristics of materials under irradiation, corrosive and explosive characteristics of materials, and the need for encapsulation. This process is an important step in ensuring the safety of reactor experiments and has been successfully used for many years at research reactors to help assure the safety of experiments placed in these reactors. Therefore, the process is expected to be an effective measure in assuring experiment safety at the UCD/MNRC reactor.

A specific limitation of less than $1.00 on the reactivity of individual moveable experiments placed in the reactor tank has been established and is safe because analysis has shown that pulse reactivity insertions of $1.75 in the 2 MW UCD/MNRC reactor result in fuel temperatures which are well below the fuel temperature safety limit of 930°C (Section 13.2.2). In addition, limiting the worth of each moveable experiment to less than $1.00 will assure that the additional increase in transient power and temperature will be slow enough so that the fuel temperature scram will be effective. Likewise, an additional reactivity limitation of less than $1.75 for any single secured experiment and an absolute total reactivity worth of $1.92, including the potential reactivity which might result from malfunction, flooding or voiding, is safe because Section 13.2.2 shows that a maximum reactivity of $1.92 can be safely inserted.

Limiting the generation of certain radionuclides in experiments and certain fission products in fueled experiments also helps to assure that occupational radiation doses (as well as doses to the general public) due to postulated experiment failure, with subsequent radionuclide or fission product release, will be within the limits prescribed by 10 CFR 20. A limit of 1.5 curies of I-131 through I-135 for a single fueled experiment and a limit of 20 curies of I-125 in the I-125 production facility glovebox are small compared to the approximately 8,500 curies of I-131 through I-135 which are present in the single fuel element failure analyzed in Section 13.2.1 (failure in air) and Section 13.2.5 (failure in water). In both cases, the occupational doses and the doses to the general public in the unrestricted area due to radioiodine are within 10 CFR 20 limits. Therefore, establishing conservative limits for radioiodine in experiments will result in projected doses well within 10 CFR 20 limits. Strontium-90 in a fueled experiment is limited to 0.005 curies which is far below the 34 curies present in the single fuel element failures mentioned above. Since no dose limits will be exceeded in the single element failure accidents, doses from experiments where the Strontium-90 is limited to 0.005 curies are expected to be safely within 10 CFR 20 limits.

Projected damage to the reactor from experiments involving explosives varies significantly depending on the quantity of explosives being irradiated and where the explosives are placed relative to critical reactor components and safety systems. For example, an explosives limit

the sample can's insertion, a water void would be created in the central facility as the aluminum cylinder descended ahead of the sample can. Similarly, if the aluminum cylinder failed to replace the can upon removal from the central facility a water void would result.

All three of the above scenarios can be bounded by the Uncontrolled Withdrawal of a Control Rod analysis (Section 13.2.2.2.2). Specifically, the Central Irradiation Facility must have less reactivity and must drive slower than the control rod analyzed ($3.50 and 42 inches/minute, respectively). To that end, the reactivity of any material in the sample can shall be measured at low power to verify its worth is not only less than $3.50, but also less than $1.75, the reactivity limit for the Central Irradiation Facility (based on the Technical Specification limit of $1.75 for the pulsed reactivity insertion). For example, the worth of a silicon ingot in the previous 1 MW in-core experiment facility was measured at $0.73 positive (vs. Water, reference exp. #96-01, 1/30/96, reactor run #2411). The worth of an aluminum cylinder vs. Void and vs. Water has been analyzed by computer simulation (Reference 13.18). The most positive reactivity effect in the computer simulation is from Case 3 to Case 9, where the voided sample can is lowered 18 inches, resulting in an increase of about $0.06. The most negative effect is from Case 3 to Case 12, where in an accident the sample can not only floods but also the aluminum cylinder drops, resulting in a decrease of about $1.76. Thus, the worth of the sample can or the aluminum cylinder vs. Water is less than $3.50, and also less than the most reactive control rod (for example, a typical regulating rod worth is $2.57, measured 6/98). With respect to the drive mechanism, the maximum drive speed is identical to the rod speed analyzed in Section 13.2.2.2.2. Furthermore, in the event of failure of the aluminum cylinder to engage upon installation of the sample can, the base of the Central Thimble is designed (by sizing the hole in the base) to allow the aluminum cylinder to descend at no more than the analyzed 42 inches/minute. Therefore, the accident analysis for Uncontrolled Withdrawal of a Control Rod (Section 13.2.2.2.2) is sufficient to bound any accident associated with the Central Irradiation Facility since: a) the material in the sample can shall be measured and verified to be less than $1.75 (half of the analyzed $3.50); b) the drive speed cannot exceed the analyzed 42 inches/minute; and c) the aluminum cylinder cannot fall uncontrolled faster than the analyzed 42 inches/minute.

Finally, physical impact on the fuel is considered non-credible since the sample can is always contained in a guide tube or attached to a drive mechanism such that it is unlikely to drop onto the core (see description in Section 10.4.1.4).

The I-125 production facility is another one of the reactor's experiment facilities, in this case, a facility designed to produce curie levels of iodine-125. A complete facility description and diagram can be found in Chapter 10, Sections 10.4.6.1 through 10.4.6.11.

The I-125 production facility is an in-core experiment facility with the location of the irradiation chamber being conservatively limited to the outer three hexagons, but most typically placed in the outer hexagon of the core. This limitation on in-core location is conservative because analysis shows that even the innermost hexagon could support the irradiation chamber without overheating a fuel element (Reference 13.20). The maximum

positive reactivity worth of this experiment is estimated to be $0.23 (based on core position E6) and, thus, it is well within the limit of less than $1.75 for any single secured experiment and the limit of less than $1.00 for any single moveable experiment.

A typical irradiation for the production of I-125 begins with transferring xenon-124 (Xe-124) gas to the irradiation chamber. As noted, the irradiation chamber is typically located in the outer hexagon of the reactor core. After a precalculated number of hours of irradiation, the activated Xe-124 gas, now containing up to 4,000 curies of xenon-125 (Xe-125), is transferred cryogenically to decay storage vessel 1. After a few days, most of the activated Xe-125 has decayed to I-125 and will plate-out inside the decay chamber. The remaining xenon gas is then transferred cryogenically to decay storage vessel 2 and the I-125 is removed in solution by sodium hydroxide (NaOH) washes. The sodium iodide solution is then packaged as a liquid and sent to an off-site user in an appropriate DOT container.

The I-125 production facility has a primary and a secondary containment. Under normal operating conditions, the primary containment's components are the only ones that interact with the xenon gas. The components of the primary containment are the irradiation chamber, tubing, pneumatically-operated bellows valves, pneumatically-operated diaphragm valves, transfer vessel, decay storage vessel 1, decay storage vessel 2, pressure transducers, vacuum transducers, iodine trap, and thermocouples. While the facility is in operation, the xenon gas will be located in one of three locations: the irradiation chamber and cold finger, decay storage vessel 1, or decay storage 2. During irradiation, the gas is typically at 180 psig, but the irradiation vessel is tested to 450 psig, providing a safety factor of 2.5.

Secondary containment is also provided around the primary containment to the irradiation chamber, and a secondary containment vessel houses the pneumatically-operated bellows valves, pneumatic operators, chamber for the cold finger, decay storage vessel 1, and decay storage vessel 2. This containment allows for recovery of the xenon gas and containment of any I-125 should a leak occur within the primary containment. The secondary containment will be filled with helium gas to approximately 1 to 5 psig, which will allow the xenon gas to be cryogenically-separated and recovered from the helium. The volume of the secondary containment will readily allow for up to three liters of xenon gas to be added to the secondary with only a small increase in secondary pressure. Pneumatic actuation of the valves within the secondary containment will be by helium pressure to ensure that helium is maintained within the secondary. Located in a fuel storage pit, the secondary containment vessel will utilize the pit's concrete shielding to reduce radiation exposure. Shielding may also be placed over the secondary containment vessel to reduce worker exposure and maintain whole body radiation levels below approximately 10 mrem/hr.

The I-125 production facility has been designed to prevent the uncontrolled release of Xe-125 and I-125. For example, the catastrophic uncontrolled release of radionuclides from the facility, which because of the process would be primarily Xe-125, is not considered to be a credible accident because it would require failure of both the primary and secondary containment (a simultaneous-double mode failure). However, it is possible to postulate a

loss of xenon gas from the primary containment into the secondary containment. In evaluating such a scenario, consider that the secondary containment volume is approximately 80 liters while the volume of the primary containment is approximately one liter. With three liters of xenon gas charged into the primary system, a total loss of the primary gas to the secondary containment would result in a very small (about 2 psig) increase in pressure inside the secondary system. The secondary system will normally operate at 1 to 5 psig and so this increase in pressure is considered insignificant in terms of secondary system integrity.

Evaluating the radiological impact of the above situation, one could make the worst-case assumption that all of the Xe-125 from the primary containment leaks into the secondary containment and that the design leak rate for the secondary system allows Xe-125 to enter the reactor room. The Xe-125 release rate from the secondary containment, the reactor room air concentration, the maximum Xe-125 concentration in the unrestricted area and the corresponding radiation dose to personnel in the reactor room and the unrestricted area can be calculated as follows, assuming that:

1. 4,000 curies of Xe-125 are available in the primary system after irradiation (a worst-case assumption based on an expected delivery of 20 Ci of I-125 from the system),
2. The volume of the secondary containment is 80 liters,
3. The secondary containment system leak rate is $1 \times 10^{-3}$ cm$^3$/sec,
4. The reactor room volume (V) is $2.09 \times 10^8$ cm$^3$,
5. The reactor room ventilation flow rate is $2.26 \times 10^7$ cm$^3$/min, and
6. 100% of the Xe-125 gas is released to the secondary containment system.

If G equals the Xe-125 release rate into the reactor room, then:

$$G = \left(\frac{4{,}000 \text{ curies}}{80 \text{ liters}}\right)\left(\frac{1 \text{ liter}}{1{,}000 \text{ cm}^3}\right)\left(\frac{10^{-3} \text{cm}^3}{\text{sec}}\right)\left(\frac{10^6 \ \mu\text{curies}}{1 \text{ curie}}\right)\left(\frac{60 \text{ sec}}{1 \text{ min}}\right),$$

$$G = 3{,}000 \ \mu\text{curies/min}.$$

If $A_e$ equals the equilibrium radioactivity present in the reactor room based on the secondary containment design leak rate and radioactive decay, then:

$$A_e = \frac{G}{\lambda}, \text{ where } \lambda = \left(\frac{0.693}{T_{1/2} \text{ Xe} - 125}\right) = \left(\frac{0.693}{17 \text{ hours}}\right),$$

therefore, $$A_e = \frac{3{,}000 \mu\text{curies/min}}{\dfrac{0.693}{(17 \text{hours})(60 \text{min/hour})}} = 4.42 \times 10^6 \ \mu\text{curies}.$$

If A equals the equilibrium radioactivity in the reactor room based on the secondary system leak rate, radioactive decay and reactor room exhaust ventilation, then:

$$A = A_e\left(\frac{\lambda}{\lambda + \lambda_V}\right),$$

where $\lambda$ is as defined above and

$$\lambda_V = \left(\frac{\text{reactor room ventilation flow rate}}{\text{reactor room volume}}\right).$$

NOTE: Assuming the reactor room ventilation continues to operate results in a worst-case scenario for releasing Xe-125 into the unrestricted area. If the ventilation system switches over to the recirculation mode, as it is designed to do when the reactor room continuous air monitor alarms (See Section 9.5.2), and it would alarm in this situation, then all but a trace of the Xe-125 would be contained in the reactor room and the recirculation system, where the xenon and any I-125 would decay and be removed by the charcoal filters in the system.

From above, A would then $= \left(4.42 \times 10^6\,\mu\text{curies}\right)\dfrac{\left(6.79 \times 10^{-4}/\text{min}\right)}{\left(6.79 \times 10^{-4}/\text{min} + 1.08 \times 10^{-1}/\text{min}\right)}$,

$A = 2.76 \times 10^4$ $\mu$curies of Xe-125 in the reactor room at equilibrium.

If concentration = A / V, then the Xe-125 concentration in the reactor room would be:

$$\left(\frac{2.76 \times 10^4\,\mu\text{curies}}{2.09 \times 10^8\,\text{cm}^3}\right) = 1.32 \times 10^{-4}\,\frac{\mu\text{curies}}{\text{cm}^3}.$$

Actual evacuation time for the reactor room has been conservatively assumed to be two minutes (Section 13.2.1.2), but five minutes was also evaluated for dosimetry purposes. Based on the 10 CFR 20 derived air concentration (DAC) for Xe-125 of $2.0 \times 10^{-5}$ $\mu$curies per milliliter, a one-hour occupancy during the preceding situation would result in a deep dose equivalent (DDE) of approximately 17.0 millirem, for a five-minute occupancy, a DDE of about 1.4 millirem and for a two-minute occupancy, a DDE of less than one (approximately 0.6) millirem. Since these doses are from submersion in Xe-125, the DDE is also essentially equal to the total effective dose equivalent (TEDE), but, in any case, the doses are well within applicable 10 CFR 20 limits.

Continuing the scenario (assuming the reactor room ventilation does not go into the recirculation mode), the Xe-125 being exhausted from the reactor room by the ventilation system then mixes with the combined ventilation flow from the radiography bays and the

preparation area fume hood, which reduces the reactor room concentration from $1.32 \times 10^{-4}$ $\mu$Ci/ml to $1.97 \times 10^{-5}$ $\mu$Ci/ml at the point of discharge from the 60-foot high UCD/MNRC stack (Reference Section 9.5.2 and Figure 9.11). Taking this concentration of Xe-125 and applying the atmospheric dispersion model and meterological data used to assess the release of argon-41 from the same stack (See Appendix A, Section A.4), the Xe-125 concentration at the point of maximum concentration in the unrestricted area is $4.5 \times 10^{-9}$ $\mu$Ci/ml. This value is about 6.5% of the applicable effluent concentration limit in 10 CFR 20, and corresponds to an annual DDE (based on Environmental Protection Agency dose conversion factors, Reference 13.21) of approximately 7.0 millirem, assuming continuous occupancy at the point of maximum concentration for a full year and the existence of the stated Xe-125 concentration for the full year. As stated, this dose assessment is based on a worst-case scenario which is never expected to occur, but the dose projected is well within 10 CFR 20 limits for the unrestricted area. As with the previous Xe-125 dose projection from reactor room occupancy, this dose is based on submersion in a semi-infinite cloud and, therefore, the DDE is essentially the same as the TEDE.

Release of Xe-125 from the primary containment system due to loss of electrical power and/or computer monitoring is another accident scenario considered to be non-credible. This conclusion is based on the fact that, even if all valves in the primary containment were simultaneously actuated in the open position, there would be no release of radioactivity into the reactor room. Releasing gas from this system requires that both manual and pneumatically-operated valves be open at the same time. If all the pneumatically-controlled valves were opened simultaneously, no gas would be released because the manual valves are normally closed. Also, all pneumatic valves are normally closed, and electric solenoid valves must be energized to supply pressure to the pneumatic valves to open them. In addition, if electrical power is lost, then all pneumatic valves close. Valve position is displayed on the console and is independent of the computer.

While there are no automatic features to assure safe valve-sequencing in the event of a computer failure, qualified personnel following approved procedures will perform the system's valve operation. Valve actuation and gas or liquid transfer involving either manual or remotely-operated valves is strictly dependent upon procedures. The production of I-125 is not an automatic operation and is dependent on personnel involvement and procedural compliance. A training program designed to ensure that only qualified personnel operate the controls of the I-125 production system is an integral part of this program.

The Iodine-125 system has two operating modes, a computer-monitored mode and a manual mode. In the computer-monitored mode, computer-driven software monitors the remotely-operated valve actuation, and prevents actuation of an improperly selected valve. In manual mode, operating personnel are able to manually-operate the valves without software intervention. All manually- or remotely-operated valves are initiated by a physical action, either at the valve or at the control panel. While the computer is operating, the software will prevent inadvertent opening of pneumatically-operated valves if they are out of sequence for a particular portion of the operation. The computer can never force a valve to open. To open a

valve, the operator must set a control switch on the control panel to the open position. A "valve open" request signal is then sent to the computer. If this particular valve is next in the sequence, then the computer will respond with a "valve open" signal. The valve open signal is routed through the valve control switch and opens the valve. If the operator sets the valve control switch to the closed position, the valve closes.

Manual valves are operated at the glove box. The remotely operated-valves are operated at the control panel. In the event of a computer failure, valve position indication would remain the same as it was prior to the loss of the computer. If there is a loss of computer monitoring, the manual setting will allow the operator to continue operation without computer intervention. This allows the operator to place the system in a secure mode.

The basic design criteria for the I-125 production facility requires that all of the solenoid- and pneumatically-operated valves be normally-closed valves. For example, to operate a three-way solenoid valve, electrical power must be applied in order to energize the solenoid to allow the helium operating gas to pass through the valve. When power to the solenoid is lost or secured, spring tension causes the valve to close, which stops the helium gas flow. When the solenoid-operated valve reaches the shut or closed position, an internal bleed port is exposed that vents off any residual downstream helium gas to ensure that the pneumatically-operated valve supply line is depressurized. To operate a pneumatically-operated bellows valve, a minimum pressure on the pneumatic actuator is required. When energized, the three-way solenoid valve described above provides the necessary actuating pressure to operate the desired bellows valve. The high pressure bellows valves in the I-125 production system are normally-closed valves with an integral valve position indication. In the event of electrical power failure at the UCD/MNRC facility itself, the solenoid valves will de-energize and close. This action will isolate and vent off the helium operating gas from any open bellows valve(s) causing them to close. With the bellows valves closed, the xenon/iodine in the system is isolated and cannot be moved or transferred until electrical power is restored. Each section of the I-125 production facility is tested to pressures appropriate for the various sections of the system.

If I-125 is being dispensed in the glove box when a facility power failure occurs, procedures will require personnel to shut the dispensing valve and place the I-125 sample container in a safe/secured position. When electrical power is restored, the production system computer and the operating program must be restarted. With the computer's selector switch in "AUTO" (computer monitoring) or "OFF," none of the primary containment system's solenoid valves will energize or reposition any pneumatically-operated valve to "OPEN" (regardless of individual valve switch positions). The operator must confirm that all of the valve selector switches are in the closed position, and select the appropriate procedure from the program menu, before any remotely-operated valve can be operated. With the system selector switch in "MANUAL" when power is restored, the operator must position the system selector switch back to "OFF" (reset) before any solenoid can receive power. At that point, any valve that was open before the power outage will reopen, unless the operator moves the respective individual valve control switch to the shut/closed position prior to resetting the switch.

As noted above, loss of electrical power to the UCD/MNRC facility will result in the loss of the I-125 production system computer, the bellows valves position indication, solenoid valve control power and displays of pressure, vacuum, temperature, and metering valves. However, the reactor room glovebox and fume hood ventilation systems and the reactor room ventilation systems will remain operational on power provided by the UCD/MNRC facility's emergency propane generator. The basic design and operating features built into this system confirm that if a loss of facility power or a loss of power specifically to the I-125 production facility were to occur, there would be no release (above the design leak rate of $10^{-3}$ cc/sec) of any xenon/iodine to the reactor room or to the unrestricted area.

There are several accident scenarios that can be evaluated which are related to the handling of the I-125, especially during the dispensing and handling in the glovebox of the final quantity of I-125 obtained from a given production run. There are also several accidents that can be postulated during the processing of the quality assurance (QA) sample in the reactor room fume hood.

To evaluate the postulated worst-case accident that could occur in the glovebox, it is assumed that the maximum expected I-125 activity in a NaOH solution present at any given time in the glovebox will be 20 curies. The glovebox filtering system consists of an activated charcoal inlet filter and two activated charcoal outlet filters (in series). The glovebox is maintained at a negative pressure with respect to the outside atmosphere by means of a variable speed blower which exhausts to the reactor room exhaust ventilation system and is supported by backup power in the event of a conventional power failure.

Before the dispensing and processing of the I-125 solution in the govebox begins and during the entire process, the reactor room ventilation exhaust, including the ventilation flow from the glovebox and the reactor room fume hood, will be diverted through special additional filtration (which is the same filtration used when the reactor room ventilation goes into the recirculation mode). More specifically, the exhaust stream will pass through a moisture separator, a standard pre-filter, a HEPA filter and two activated charcoal filters before being mixed with the radiography bays' ventilation flow and discharged out the 60-foot high stack.

In addition to the enhanced air filtration described above, the exhaust flow from the glovebox, fume hood, and reactor room will be continuously monitored for I-125 before it is discharged from the stack. Should there be an increase in the I-125 air concentration sufficient to exceed the preset limit on the I-125 CAM, or on the reactor room CAM, then the entire reactor room ventilation flow will automatically go into a recirculation mode (See Section 9.5.2 for a more complete description of the ventilation system). In this mode, the exhaust air from the reactor room will no longer be discharged out the stack and the release of any radioactive material in this air effluent will thus be stopped. However, while recirculating, the air will continue to be filtered through the moisture separator, the pre-filter, the HEPA filter and the charcoal filters before it is returned to the reactor room.

In considering the specific accidents that could occur during the dispensing and handling of up to 20 curies of I-125 in the glovebox, two scenarios can be analyzed. First, as a worst-case scenario, it is assumed that there is an accident in the glovebox which, by some undefined mechanism, causes all 20 curies of I-125 to instantaneously volatilize, and with no iodine plateout, to leave the glovebox through the two charcoal filters in the glovebox exhaust system. It is further assumed that the I-125 in the glovebox exhaust follows the previously described special filtration path for reactor room exhaust during I-125 processing, which introduces two more charcoal filters. An additional assumption for this situation is that the I-125 CAM fails to respond properly and does not switch the reactor room ventilation into the recirculation mode, and that this failure results in the reactor room exhaust being mixed with the ventilation flow from the radiography bays and discharged out the facility stack into the unrestricted area. It is also assumed that this series of events occurs over a 30-second interval. Using these assumptions, as listed below, the concentration of I-125 in the unrestricted area and the corresponding dose to unmonitored personnel can be calculated as follows, assuming that:

1. All 20 curies of I-125 volatilizes and leaves the glovebox through the glovebox exhaust system with no internal iodine plateout,

2. The rated efficiency for each of the two glovebox activated charcoal filters is 99%, but, for conservatism, the efficiency will be assumed to be 90%,

3. The rated efficiency for each of the two reactor room activated charcoal filters (i.e., the same two charcoal filters used when the reactor room ventilation is in the recirculation mode) is 99.7%, but, for conservatism, the efficiency will be assumed to be 90%,

4. The reactor room ventilation flow rate is $2.26 \times 10^7$ $cm^3/min$ (800 cfm) (See Figure 9.11),

5. The concentration reduction factor for mixing the reactor room exhaust with all other exhaust stack flow is 6.7 (See Section 9.5.2 and Figure 9.11),

6. The concentration reduction factor from the point of discharge at the 60-foot high stack to the point of maximum concentration in the unrestricted area is 4350 (based on the atmospheric dispersion model and meteorological data used to assess the release and dispersion of Argon-41 from the same stack (See Appendix A, Section A.4),

7. The release from the glovebox and subsequent discharge out the stack occurs over a 30-second interval, and

8. The reactor room ventilation system fails to go into the recirculation mode.

First, the I-125 reduction factor for one pass through four 90% efficient activated charcoal filters will be:

$(0.1)(0.1)(0.1)(0.1) = 1 \times 10^{-4}$ of the original I-125 remains.

Next, based on the above assumptions (1-3) regarding air filtration and I-125 release, the amount of I-125 exhausted to the stack will be:

$(1 \times 10^{-4})(20\ \text{Ci}) = 2 \times 10^{-3}$ curies $= 2 \times 10^{3}\ \mu$curies.

Assuming that the 2,000 $\mu$curies of I-125 is mixed with the reactor room exhaust air over a 30-second interval, the average I-125 air concentration coming from the reactor room into the stack for this 30-second period will be:

$$\frac{\left(2 \times 10^{3}\,\mu\text{curies}\right)}{\left(2.26 \times 10^{7}\ \text{cm}^{3}/\text{min}\right)\left(0.5\ \text{min}\right)} = 1.77 \times 10^{-4}\ \mu\text{curies}/\text{cm}^{3}\ .$$

Based on the assumption that the reactor room ventilation system does not go into the recirculation mode, the I-125 exhausted from the reactor room into the stack mixes with the combined ventilation flow from the radiography bays and the equipment area fume hood, which reduces the I-125 concentration at the point of discharge from the stack to:

$$\frac{\left(1.77 \times 10^{-4}\ \mu\text{curies}/\text{cm}^{3}\right)}{6.7} = 2.64 \times 10^{-5}\ \mu\text{curies}/\text{cm}^{3}\ .$$

Applying the applicable atmospheric dispersion model and appropriate meteorological data (See Appendix A, Section A.4), the I-125 concentration at the point of maximum concentration in the unrestricted area is:

$$\frac{\left(2.64 \times 10^{-5}\ \mu\text{curies}/\text{cm}^{3}\right)}{4{,}350} = 6.07 \times 10^{-9}\ \mu\text{curies}/\text{cm}^{3}\ .$$

Assuming a person were exposed to this concentration of I-125 for the entire 30-second duration of this event, the CEDE to the thyroid is much less than 1 millirem (based on Environmental Protection Agency dose conversion factors, Reference 13.21). Extrapolating this to a more extreme situation, if the exposure duration were to increase to 10 minutes (a factor of 20 increase) at the same concentration the estimated CEDE to the thyroid would still not exceed 1 millirem. In either case, the projected doses are well within 10 CFR 20 limits.

A second accident scenario that can be postulated for periods when I-125 is being dispensed or processed in the glovebox is similar to the preceding accident, but in this case it is assumed that the reactor room ventilation system is put into the recirculation mode due to the expected response of the I-125 CAM. In this situation, little or none of the I-125 will be discharged out the facility stack compared to the previous accident scenario and the focus is on exposure to occupationally-exposed individuals in the reactor room. Should the accident in the glovebox (again by some undefined mechanism) cause all 20 curies of I-125 to instantaneously volatilize and leave the glovebox through the glovebox exhaust system, the concentration of airborne I-125 in the reactor room and the subsequent occupational dose to workers in the room can be calculated as follows, assuming that:

1. All 20 curies of I-125 volatilizes and, with no internal iodine plateout, leaves the glovebox through the glovebox exhaust system,

2. The rated efficiency for each of the two glovebox activated charcoal filters is 99%, but, for conservatism, the efficiency will be assumed to be 90%,

3. The rated efficiency for each of the two reactor room recirculation system activated charcoal filters is 99.97%, but, for conservatism, the efficiency will be assumed to be 90%, and

4. The volume of the reactor room is $7.39 \times 10^3$ ft$^3$ or $2.09 \times 10^8$ cm$^3$ (See Figure 9.11).

NOTE: Under the postulated accident scenario, the air from the glovebox will first pass through two activated charcoal filters on the glovebox itself. It will then mix with the reactor room exhaust flow and pass through a HEPA filter and two more activated charcoal filters before it returns to the reactor room atmosphere where personnel uptake of I-125 could occur. In addition, since the reactor room is in a recirculation mode, the room air will continue to pass through two large activated charcoal filters so the I-125 concentration will continue to decrease. Nevertheless, if a worst-case I-125 air concentration in the reactor room is based on only one pass of the mixed glovebox and reactor room exhaust through the four sequential charcoal filters and a release of all 20 curies of I-125 from the glovebox into the reactor room recirculation system, the occupational dose for workers in the reactor room would be as shown below.

First, the I-125 reduction factor for one pass through four 90% efficient activated charcoal filters will be:

$$(0.1)(0.1)(0.1)(0.1) = 1 \times 10^{-4} \text{ of the original I-125 remains.}$$

Next, based on the above assumptions (1-3) regarding air filtration and I-125 release, the I-125 returned to the reactor room after the first pass through the recirculation system will be:

$$(1 \times 10^{-4})(20\ \text{Ci}) = 2 \times 10^{-3}\ \text{curies} = 2 \times 10^{3}\ \mu\text{curies}.$$

Assuming that the 2,000 microcuries of I-125 are mixed uniformly in the reactor room air, the reactor room I-125 air concentration will be:

$$\left(\frac{2 \times 10^{3}\,\mu\text{Ci}}{2.08 \times 10^{8}\,\text{cm}^{3}}\right) = 9.6 \times 10^{-6}\ \mu\text{Ci/cm}^{3}\ .$$

Using the five-minute and two-minute reactor room occupancy times evaluated earlier in conjunction with a release of Xe-125 into the reactor room, and basing the committed effective dose equivalent (CEDE) for the thyroid on the 10 CFR 20 derived air concentration (DAC) for iodine-125, the thyroid CEDE for a five-minute occupancy would be approximately 67 millirem and, for a two-minute occupancy, the CEDE would be about 27 millirem. Doses to other organs and any external dose from the I-125 air concentration will be very small, and therefore the CEDE values are representative of the total effective dose equivalents that would result from this occurrence and are well within 10 CFR 20 values.

The liquid quality assurance aliquot (100 λ) from the I-125 sample in the glovebox will be contained in a sealed serum glass vial, which will be placed in a mechanically-sealed metal pipe and passed out of the glovebox using a pass-through sleeve and an umbilical cut. All of this will then be placed in a plastic zip lock bag. This packaging will preclude any accidental release during transport of the sample to the iodine fume hood located in the reactor room.

After transferring the smaller I-125 QA sample onto a suitable counting medium inside the fume hood, the sample will be sealed with plastic tape and then double bagged in plastic. The sample is now ready for transport to the counting lab for QA measurement. While awaiting measurement, the sample will be segregated in a closed container for iodine sample use only. Once counting is completed, the sample will be returned to the iodine fume hood in the reactor room. All QA samples and residual process liquids will be gathered and sealed in a metal container for decay in storage or possible future disposal by appropriate means. As noted in conjunction with work in the glovebox, prior to starting the processing of the I-125 QA sample in the reactor room fume hood and while the processing is taking place, the reactor room ventilation system will be subjected to the special additional filtration described previously in this section and detailed in Section 9.5.2.

The maximum amount of I-125 in the QA sample that will be transferred to the reactor room fume hood is 200 millicuries. The fume hood filtering system consists of two activated charcoal outlet filters (in series). The hood will be maintained at a negative pressure with respect to the outside atmosphere by means of a variable speed blower which exhausts to the reactor room exhaust ventilation system. The hood blower and the reactor room ventilation system are equipped with backup emergency power.

Analysis of occurrences in the fume hood similar to the two postulated for the glovebox can be carried out using essentially the same assumptions, since (1) the fume hood has two charcoal filters like the glovebox (with 90% plus iodine removal efficiency), and (2) it exhausts into the same ventilation system for the reactor room. The one difference is that a maximum I-125 activity of only 200 millicuries in an unsealed form will be allowed in the fume hood and, therefore, the doses to workers should all 200 millicuries volatilize into the hood ventilation system will be approximately 1% of those estimated for the glovebox events. Therefore, the CEDE for the thyroid for both postulated accidents will be less than 1.0 millirem. Also note that, should an accident in the fume hood cause the release of the total 1 curie of I-125 allowed in the hood (200 millicuries in process and 800 millicuries in sealed storage containers), the consequences would be bounded by the analysis of a 20 curie release from the glovebox.

Operation of the I-125 production facility will be supported by the radiation protection program outlined in Chapter 11. This program includes appropriate air monitoring, radiation level and contamination surveys, shielding, waste management, and a bioassay program to assess thyroid uptake of radioiodine (See Chapter 11).

### 13.2.7 Loss of Normal Electrical Power

#### 13.2.7.1 Accident-Initiating Events and Scenarios

Loss of electrical power to the UCD/MNRC could occur due to many events and scenarios which routinely affect commercial power.

#### 13.2.7.2 Accident Analysis and Determination of Consequences

Since the UCD/MNRC does not require emergency backup systems to safely maintain core cooling, there are no credible reactor accidents associated with the loss of electrical power. A backup power system is present at the UCD/MNRC which mainly provides conditioned power to the reactor console and control instrumentation. Therefore, the reactor will not automatically scram when there is a loss of normal electrical power. In fact, the backup power system is capable of providing electrical power for reactor control and various operational measurements for a period of time after loss of normal electrical power and until its battery power supply is exhausted.

Loss of normal electrical power during reactor operations is addressed in the reactor operating procedures, which require that upon loss of normal power an orderly shutdown is to be initiated by the operator on duty. The battery backup power will allow monitoring of the orderly shutdown of the reactor and verification of the reactor's shutdown condition.

13.2.8 External Events

13.2.8.1 Accident Initiating Events and Scenarios

Hurricanes, tornadoes and floods are virtually nonexistent in the area around the UCD/MNRC reactor. Therefore, these events are not considered to be viable causes of accidents for the reactor facility. In addition, seismic activity in Sacramento is low relative to other areas of California (Chapter 2). Seismic activity has already been mentioned in connection with postulated reactor tank damage in Section 13.2.3.

The UCD/MNRC facility is surrounded by a security fence and a physical security plan is continuously in force for personnel and activities inside the fence. The reactor site is located in an Industrial Park on a former U.S. Air Force Base where access and overall security is far stricter than the surrounding civilian business and residential areas. Therefore, accidents caused by human controlled events which would damage the reactor, such as explosions or other unusual actions, are considered to be of very low probability.

Since the UCD/MNRC reactor is located at the edge of the runway at the former McClellan AFB, airplane crashes involving the reactor may potentially cause reactor damage.

13.2.8.2 Accident Analysis and Determination of Consequences

A study of the probability of aircraft crashes which could cause reactor damage at the UCD/MNRC was conducted by GA Technologies as a part of the original Stationary Neutron Radiography System Proposal (Reference 13.19). The conclusions show that the calculated reactor damage probability due to aircraft accidents is $5 \times 10^{-8}$ per reactor year. This value was obtained using conservative assumptions and the "best estimate" value is expected to be considerably lower than $5 \times 10^{-8}$. Safety analyses of nuclear power reactors have generally concluded that a reactor damage probability due to an aircraft accident which is less than $1 \times 10^{-7}$ per year does not represent a significant contribution to the overall reactor risk. Therefore, it is concluded that no specific aircraft accident and no radiological consequences need to be considered for the UCD/MNRC reactor.

13.2.9 Mishandling or Malfunction of Equipment

13.2.9.1 Accident Initiating Events and Scenarios

No credible accident initiating events were identified for this accident class. Situations involving an operator error at the reactor controls, a malfunction or loss of safety related instruments or controls and an electrical fault in the control rod system were anticipated at the reactor design stage. As a result, many safety features, such as control system interlocks and automatic reactor shutdown circuits, were designed into the overall TRIGA® Control System (Chapter 7). TRIGA® fuel also incorporates a number of safety features (Chapter 4)

which together with the features designed into the control system assured safe reactor response, including in some cases reactor shutdown.

Malfunction of confinement or containment systems would have the greatest impact during the maximum hypothetical accident (MHA), if they were used to lessen the impact of such an accident. However, as shown in Section 13.2.1, no credit is taken for confinement or containment systems in the analysis of the MHA for the UCD/MNRC reactor. Furthermore, no safety considerations at the UCD/MNRC depend on confinement or containment systems, although simple confinement devices like a fume hood might be used as part of normal operations.

Rapid leaks of liquids have been previously addressed in Section 13.2.3. Although no damage to the reactor occurs as a result of these leaks, the details of the analyses provide a more comprehensive explanation.

## 13.3 Summary and Conclusions

Chapter 13 of the Safety Analysis Report contains a conservative analysis of many different types of hypothetical accidents as they relate to the UCD/MNRC reactor and the surrounding environment. Beginning with the maximum hypothetical accident and continuing on through an entire array of other accidents, it has been shown that the consequences of such accidents will not result in occupational radiation exposure of the UCD/MNRC staff or radiation exposure of the general public in excess of applicable NRC limits in 10 CFR Part 20. Furthermore, there is no projected significant damage to the reactor as an outcome of the accidents evaluated, except the damage or malfunction assumed as part of the different accident scenarios analyzed. Details of the assumptions used for each accident scenario and the specific consequences of each accident are presented in the text of this Chapter.