OFFSITE DOSE CALCULATION MANUAL

FOR

SOUTHERN NUCLEAR OPERATING COMPANY

VOGTLE ELECTRIC GENERATING PLANT

Revision 17

October 24, 2000

DISTRIBUTION LIST

Name	Copy Number
George R. Frederick	1
Training Center Simulator	3
VEGP Main Control Room Podium	6
Nancy D. Lacey	7
William L. Burmeister	8
Robert C. Hand	9
Primary Chemistry Lab	10
Service Bldg. (Chemistry)	11
Indira Kochery	12
Manager, Training & Emergency Preparedness	14
James A. Bailey	15
Robert W. Talmadge	16
VEGP Document Control	18
SAER Supervisor	19
Steven M. Douglas	20
Joe B. Sills	21
Dwight Hostetter	22
Michael C. Nichols	23
Shan Sundaram	24
Alan V. Fowler	28
Steve White	29

REVISION LOG

Revision Number	Date
0	8/85
1	8/86
2	11/86
3	3/87
4	7/87
5	10/87
6	9/88
7	3/91
8	2/93
9	1/94
10	2/96
11	12/96
12	2/97
13	6/97
14	12/97
15	1/99
16	7/99
17	10/00

TABLE OF CONTENTS

	PAGE
DISTRIBUTION LIST	i
REVISION LOG	ii
TABLE OF CONTENTS	iii
LIST OF TABLES	vi
LIST OF FIGURES	viii
REFERENCES	ix
CHAPTER 1: INTRODUCTION	1-1
CHAPTER 2: LIQUID EFFLUENTS	2-1
2.1 LIMITS OF OPERATION	2-1
2.1.1 Liquid Effluent Monitoring Instrumentation Control	2-1
2.1.2 Liquid Effluent Concentration Control	2-7
2.1.3 Liquid Effluent Dose Control	2-11
2.1.4 Liquid Radwaste Treatment System Control	2-13
2.1.5 Major Changes to Liquid Radioactive Waste Treatment Systems	2-14
2.2 LIQUID RADWASTE TREATMENT SYSTEM	2-15
2.3 LIQUID EFFLUENT MONITOR SETPOINTS	2-19
2.3.1 General Provisions Regarding Setpoints	2-19
2.3.2 Setpoints for Radwaste System Discharge Monitors	2-21
2.3.3 Setpoints for Monitors on Normally Low-Radioactivity Streams	2-29
2.4 LIQUID EFFLUENT DOSE CALCULATIONS	2-31
2.4.1 Calculation of Dose	2-31
2.4.2 Calculation of $A_{i\tau}$	2-32
2.4.3 Calculation of CF_{iv}	2-33
2.5 LIQUID EFFLUENT DOSE PROJECTIONS	2-43
2.5.1 Thirty-One Day Dose Projections	2-43
2.5.2 Dose Projections for Specific Releases	2-43
2.6 DEFINITIONS OF LIQUID EFFLUENT TERMS	2-44
CHAPTER 3: GASEOUS EFFLUENTS	3-1
3.1 LIMITS OF OPERATION	3-1
3.1.1 Gaseous Effluent Monitoring Instrumentation Control	3-1
3.1.2 Gaseous Effluent Dose Rate Control	3-7

TABLE OF CONTENTS (Continued)

PAGE

3.1.3 Gaseous Effluent Air Dose Control 3-11
3.1.4 Control on Gaseous Effluent Dose to a Member of the Public 3-13
3.1.5 Gaseous Radwaste Treatment System Control 3-15
3.1.6 Major Changes to Gaseous Radioactive Waste Treatment Systems 3-16
3.2 GASEOUS WASTE PROCESSING SYSTEM 3-17
3.3 GASEOUS EFFLUENT MONITOR SETPOINTS 3-23
3.3.1 General Provisions Regarding Noble Gas Monitor Setpoints 3-23
3.3.2 Setpoint for the Final Noble Gas Monitor on Each Release Pathway 3-25
3.3.3 Setpoints for Noble Gas Monitors on Effluent Source Streams 3-29
3.3.4 Determination of Allocation Factors, AG 3-32
3.3.5 Setpoints for Noble Gas Monitors with Special Requirements 3-34
3.3.6 Setpoints for Particulate and Iodine Monitors 3-34
3.4 GASEOUS EFFLUENT COMPLIANCE CALCULATIONS 3-35
3.4.1 Dose Rates at and Beyond the Site Boundary 3-35
3.4.2 Noble Gas Air Dose at or Beyond Site Boundary 3-36
3.4.3 Dose to a Member of the Public at or Beyond Site Boundary 3-41
3.4.4 Dose Calculations to Support Other Requirements 3-44
3.5 GASEOUS EFFLUENT DOSE PROJECTIONS 3-49
3.5.1 Thirty-One Day Dose Projections 3-49
3.5.2 Dose Projections for Specific Releases 3-50
3.6 DEFINITIONS OF GASEOUS EFFLUENT TERMS 3-51

CHAPTER 4: RADIOLOGICAL ENVIRONMENTAL MONITORING PROGRAM 4-1
4.1 LIMITS OF OPERATION 4-1
4.1.1 Radiological Environmental Monitoring 4-1
4.1.2 Land Use Census 4-10
4.1.3 Interlaboratory Comparison Program 4-12
4.2 RADIOLOGICAL ENVIRONMENTAL MONITORING LOCATIONS 4-13

CHAPTER 5: TOTAL DOSE DETERMINATIONS 5-1
5.1 LIMIT OF OPERATION 5-1
5.1.1 Applicability 5-1
5.1.2 Actions 5-1
5.1.3 Surveillance Requirements 5-2
5.1.4 Basis 5-2
5.2 DEMONSTRATION OF COMPLIANCE 5-3

CHAPTER 6: POTENTIAL DOSES TO MEMBERS OF THE PUBLIC DUE TO THEIR ACTIVITIES INSIDE THE SITE BOUNDARY 6-1

TABLE OF CONTENTS (Continued)

PAGE

6.1 REQUIREMENT FOR CALCULATION 6-1
6.2 CALCULATIONAL METHOD 6-1

CHAPTER 7: REPORTS 7-1
7.1 ANNUAL RADIOLOGICAL ENVIRONMENTAL OPERATING REPORT 7-1
7.1.1 Requirement for Report 7-1
7.1.2 Report Contents 7-1
7.2 RADIOACTIVE EFFLUENT RELEASE REPORT 7-3
7.2.1 Requirement for Report 7-3
7.2.2 Report Contents 7-3
7.3 MONTHLY OPERATING REPORT 7-7
7.4 SPECIAL REPORTS 7-7

CHAPTER 8: METEOROLOGICAL MODELS 8-1
8.1 ATMOSPHERIC DISPERSION 8-1
8.1.1 Ground-Level Releases 8-1
8.1.2 Elevated Releases 8-3
8.1.3 Mixed-Mode Releases 8-5
8.2 RELATIVE DEPOSITION 8-6
8.2.1 Ground-Level Releases 8-6
8.2.2 Elevated Releases 8-6
8.2.3 Mixed-Mode Releases 8-7
8.3 ELEVATED PLUME DOSE FACTORS 8-7

CHAPTER 9: METHODS AND PARAMETERS FOR CALCULATION OF GASEOUS EFFLUENT PATHWAY DOSE FACTORS, R_{aipj} 9-1
9.1 INHALATION PATHWAY FACTOR 9-1
9.2 GROUND PLANE PATHWAY FACTOR 9-2
9.3 GARDEN VEGETATION PATHWAY FACTOR 9-3
9.4 GRASS-COW-MILK PATHWAY FACTOR 9-6
9.5 GRASS-GOAT-MILK PATHWAY FACTOR 9-10
9.6 GRASS-COW-MEAT PATHWAY FACTOR 9-14

CHAPTER 10: DEFINITIONS OF EFFLUENT CONTROL TERMS 10-1
10.1 TERMS SPECIFIC TO THE ODCM 10-1
10.2 TERMS DEFINED IN THE TECHNICAL SPECIFICATIONS 10-5

LIST OF TABLES

		PAGE
Table 2-1.	Radioactive Liquid Effluent Monitoring Instrumentation	2-3
Table 2-2.	Radioactive Liquid Effluent Monitoring Instrumentation Surveillance Requirements	2-5
Table 2-3.	Radioactive Liquid Waste Sampling and Analysis Program	2-9
Table 2-4.	Applicability of Liquid Monitor Setpoint Methodologies	2-20
Table 2-5.	Parameters for Calculation of Doses Due to Liquid Effluent Releases	2-36
Table 2-6.	Element Transfer Factors	2-37
Table 2-7.	Adult Ingestion Dose Factors	2-38
Table 2-8.	Site-Related Ingestion Dose Factors, $A_{i\tau}$	2-41
Table 3-1.	Radioactive Gaseous Effluent Monitoring Instrumentation	3-3
Table 3-2.	Radioactive Gaseous Effluent Monitoring Instrumentation Surveillance Requirements	3-5
Table 3-3.	Radioactive Gaseous Waste Sampling and Analysis Program	3-9
Table 3-4.	Applicability of Gaseous Monitor Setpoint Methodologies	3-24
Table 3-5.	Dose Factors for Exposure to a Semi-Infinite Cloud of Noble Gases	3-39
Table 3-6.	Dose Factors for Exposure to Direct Radiation from Noble Gases in an Elevated Finite Plume	3-40
Table 3-7.	Attributes of the Controlling Receptor	3-43
Table 3-8.	R_{aipj} for Ground Plane Pathway, All Age Groups	3-46
Table 3-9.	R_{aipj} for Inhalation Pathway, Child Age Group	3-47
Table 3-10.	R_{aipj} for Inhalation Pathway, Adult Age Group	3-48
Table 3-11.	R_{aipj} for Cow Meat Pathway, Child Age Group	3-49
Table 3-12.	R_{aipj} for Garden Vegetation, Child Age Group	3-50
Table 4-1.	Radiological Environmental Monitoring Program	4-4
Table 4-2.	Reporting Levels for Radioactivity Concentrations in Environmental Samples	4-8
Table 4-3.	Values for the Minimum Detectable Concentration (MDC)	4-9
Table 4-4.	Radiological Environmental Monitoring Locations	4-14
Table 6-1.	Attributes of Member of the Public Receptor Locations Inside the Site Boundary	6-3
Table 8-1.	Terrain Elevation Above Plant Site Grade	8-8
Table 9-1.	Miscellaneous Parameters for the Garden Vegetation Pathway	9-5
Table 9-2.	Miscellaneous Parameters for the Grass-Cow-Milk Pathway	9-9
Table 9-3.	Miscellaneous Parameters for the Grass-Goat-Milk Pathway	9-13
Table 9-4.	Miscellaneous Parameters for the Grass-Cow-Meat Pathway	9-17
Table 9-5.	Individual Usage Factors	9-18

LIST OF TABLES (Continued)

		PAGE
Table 9-6.	Stable Element Transfer Data	9-19
Table 9-7.	Inhalation Dose Factors for the Infant Age Group	9-20
Table 9-8.	Inhalation Dose Factors for the Child Age Group	9-23
Table 9-9.	Inhalation Dose Factors for the Teenager Age Group	9-26
Table 9-10.	Inhalation Dose Factors for the Adult Age Group	9-29
Table 9-11.	Ingestion Dose Factors for the Infant Age Group	9-32
Table 9-12.	Ingestion Dose Factors for the Child Age Group	9-35
Table 9-13.	Ingestion Dose Factors for the Teenager Age Group	9-38
Table 9-14.	Ingestion Dose Factors for the Adult Age Group	9-41
Table 9-15.	External Dose Factors for Standing on Contaminated Ground	9-44

LIST OF FIGURES

		PAGE
Figure 2-1.	Unit 1 Liquid Radwaste Treatment System	2-16
Figure 2-2.	Unit 2 Liquid Radwaste Treatment System	2-17
Figure 2-3.	Liquid Radwaste Discharge Pathways	2-18
Figure 3-1.	Schematic Diagram of the Gaseous Radwaste Treatment System	3-18
Figure 3-2.	Schematic Diagram of the Unit 1 Plant Vent Release Pathway	3-19
Figure 3-3.	Schematic Diagram of the Unit 2 Plant Vent Release Pathway	3-20
Figure 3-4.	Schematic Diagram of the Turbine Building Vent Release Pathway (Typical of Both Units)	3-21
Figure 3-5.	Schematic Diagram of the Dry Active Waste Processing Building Ventilation Release Pathway	3-22
Figure 4-1.	Terrestrial Stations Near Site Boundary	4-17
Figure 4-2.	Terrestrial Stations and Aquatic Stations, 0-5 Miles	4-18
Figure 4-3.	Terrestrial Stations Beyond 5 Miles	4-19
Figure 4-4.	Drinking Water Stations	4-20
Figure 8-1.	Vertical Standard Deviation of Material in a Plume (σ_Z)	8-9
Figure 8-2.	Terrain Recirculation Factor (K_T)	8-10
Figure 8-3.	Plume Depletion Effect for Ground Level Releases	8-11
Figure 8-4.	Plume Depletion Effect for 30-Meter Releases	8-12
Figure 8-5.	Plume Depletion Effect for 60-Meter Releases	8-13
Figure 8-6.	Plume Depletion Effect for 100-Meter Releases	8-14
Figure 8-7.	Relative Deposition for Ground-Level Releases	8-15
Figure 8-8.	Relative Deposition for 30-Meter Releases	8-16
Figure 8-9.	Relative Deposition for 60-Meter Releases	8-17
Figure 8-10.	Relative Deposition for 100-Meter (or Greater) Releases	8-18

REFERENCES

1. J.S. Boegli, R.R. Bellamy, W.L. Britz, and R.L. Waterfield, "Preparation of Radiological Effluent Technical Specifications for Nuclear Power Plants," NUREG-0133, October 1978.

2. "Calculation of Annual Doses to Man from Routine Releases of Reactor Effluents for the Purpose of Evaluating Compliance with 10 CFR 50, Appendix I," U.S. NRC Regulatory Guide 1.109, March 1976.

3. "Calculation of Annual Doses to Man from Routine Releases of Reactor Effluents for the Purpose of Evaluating Compliance with 10 CFR 50, Appendix I," U.S. NRC Regulatory Guide 1.109, Revision 1, October 1977.

4. "Methods for Estimating Atmospheric Transport and Dispersion of Gaseous Effluents in Routine Releases from Light-Water-Cooled Reactors," U.S. NRC Regulatory Guide 1.111, March 1976.

5. "Methods for Estimating Atmospheric Transport and Dispersion of Gaseous Effluents in Routine Releases from Light-Water-Cooled Reactors," U.S. NRC Regulatory Guide 1.111, Revision 1, July 1977.

6. "Estimating Aquatic Dispersion of Effluents from Accidental and Routine Reactor Releases for the Purpose of Implementing Appendix I," U.S. NRC Regulatory Guide 1.113, April 1977.

7. W.R. Stokes III, T.W. Hale, J.L. Pearman, and G.R. Buell, "Water Resources Data, Georgia, Water Year 1983," U.S. Geological Survey Water Data Report GA-83-1, June 1984.

8. Direct communication with the Water Resources Division, U.S. Geological Survey, U.S. Department of the Interior, February 1985.

9. Bernd Kahn, *et al.*, Bioaccumulation of P-32 in Bluegill and Catfish," NUREG/CR-3981, February 1985.

10. Memo from S.E. Ewald, Georgia Power Company, to C.C. Eckert, Georgia Power Company, May 9, 1988.

11. Vogtle Electric Generating Plant Units 1 and 2 Final Safety Analysis Report, Georgia Power Company.

12. Vogtle Electric Generating Plant Units 1 and 2 Environmental Report - Operating License Stage, Georgia Power Company.

13. Memo from A.C. Stalker, Georgia Power Company, to D.F. Hallman, Georgia Power Company, May 9, 1988.

14. Vogtle Electric Generating Plant Land Use Survey - 1988, Georgia Power Company, April 1988.

15. Letter to Southern Company Services from Pickard, Lowe, and Garrick, Inc., Washington, D.C., April 27, 1988.

16. Letter to Bill Ollinger, Georgia Power Company, from T.L. Broadwell, Georgia Power Company, Atlanta, Georgia, June 22, 1988.

17. Letter to Bill Ollinger, Georgia Power Company, from R.D. Just, Georgia Power Company, Atlanta, Georgia, July 8, 1988.

18. L.A. Currie, Lower Limit of Detection: Definition and Elaboration of a Proposed Position of Radiological Effluent and Environmental Measurements, U.S. NRC Report NUREG/CR-4007, 1984.

REFERENCES (Continued)

19. "Radiological Assessment Branch Technical Position", U.S. Nuclear Regulatory Commission, Revision 1, November 1979.

20. D.C. Kocher, "Radioactive Decay Data Tables," U.S. DOE Report DOE/TIC-11026, 1981.

21. J.E. Till and H.R. Meyer, eds., Radiological Assessment, U.S. NRC Report NUREG/CR-3332, 1983.

22. Letter to Bill Ollinger, Southern Nuclear Operating Company, from Gary D. Johnson, Georgia Power Company, December 21, 1995.

CHAPTER 1
INTRODUCTION

The Offsite Dose Calculation Manual is a supporting document of the Technical Specifications. As such, it describes the methodology and parameters to be used in the calculation of offsite doses due to radioactive liquid and gaseous effluents, and in the calculation of liquid and gaseous effluent monitoring instrumentation alarm setpoints. In addition, it contains the following:

- The controls required by the Technical Specifications, governing the radioactive effluent and radiological environmental monitoring programs.
- Schematics of liquid and gaseous radwaste effluent treatment systems, which include designation of release points to UNRESTRICTED AREAS.
- A list and maps indicating the specific sample locations for the Radiological Environmental Monitoring Program.
- Specifications and descriptions of the information that must be included in the Annual Radiological Environmental Operating Report and the Radioactive Effluent Release Report required by the Technical Specifications.

The ODCM will be maintained at the plant for use as a reference guide and training document of accepted methodologies and calculations. Changes in the calculational methods or parameters will be incorporated into the ODCM in order to ensure that it represents current methodology in all applicable areas. Any computer software used to perform the calculations described will be maintained current with the ODCM.

Equations and methods used in the ODCM are based on those presented in NUREG-0133 (Reference 1), in Regulatory Guide 1.109 (References 2 and 3), in Regulatory Guide 1.111 (References 4 and 5), and in Regulatory Guide 1.113 (Reference 6).

CHAPTER 2
LIQUID EFFLUENTS

2.1 LIMITS OF OPERATION

The following Liquid Effluent Controls implement requirements established by Technical Specifications Section 5.0. Terms printed in all capital letters are defined in Chapter 10.

2.1.1 Liquid Effluent Monitoring Instrumentation Control

In accordance with Technical Specification 5.5.4.a, the radioactive liquid effluent monitoring instrumentation channels shown in Table 2-1 shall be OPERABLE with their alarm/trip setpoints set to ensure that the limits specified in Section 2.1.2 are not exceeded. The alarm/trip setpoints of these channels shall be determined in accordance with Section 2.3.

2.1.1.1 Applicability

This limit applies at all times.

2.1.1.2 Actions

With a radioactive liquid effluent monitoring instrumentation channel alarm/trip setpoint less conservative than required by the above control, immediately suspend the release of radioactive liquid effluents monitored by the affected channel, declare the channel inoperable, or change the setpoint to a conservative value.

With less than the minimum number of radioactive liquid effluent monitoring instrumentation channels OPERABLE, take the ACTION shown in Table 2-1. Restore the INOPERABLE instrumentation to OPERABLE status within 30 days, or if unsuccessful, explain in the next Radioactive Effluent Release Report, per Technical Specification 5.6.3, why this inoperability was not corrected in a timely manner.

This control does not affect shutdown requirements or MODE changes.

2.1.1.3 Surveillance Requirements

Each radioactive liquid effluent monitoring instrumentation channel shall be demonstrated OPERABLE by performance of the CHANNEL CHECK, SOURCE CHECK, CHANNEL

CALIBRATION, and CHANNEL OPERATIONAL TEST operations at the frequencies shown in Table 2-2. Specific instrument numbers are provided in parentheses for information only. The numbers apply to each unit. These numbers will help to identify associated channels or loops and are not intended to limit the requirements to the specific instruments associated with the number.

2.1.1.4 Basis

The radioactive liquid effluent instrumentation is provided to monitor and control, as applicable, the releases of radioactive materials in liquid effluents during actual or potential releases of liquid effluents. The Alarm/Trip Setpoints for these instruments shall be calculated and adjusted in accordance with the methodology and parameters in Section 2.3 to ensure that the alarm/trip will occur prior to exceeding the limits of Section 2.1.2. The OPERABILITY and use of this instrumentation is consistent with the requirements of General Design Criteria 60, 63, and 64 of Appendix A to 10 CFR Part 50.

Table 2-1. Radioactive Liquid Effluent Monitoring Instrumentation

Instrument	OPERABILITY Requirements[a]	
	Minimum Channels Operable	ACTION
1. Radwaste Monitors Providing Alarm and Automatic Termination of Release		
a. Liquid Radwaste Effluent Line (RE-0018)	1	37
b. Steam Generator Blowdown Effluent Line (RE-0021)	1	38
c. Turbine Building Effluent Line (RE-0848)	1	38
2. Radwaste Monitors Providing Alarm, but Not Automatic Termination of Release		
NSCW Effluent Line (RE-0020 A&B)	1	39
3. Flowrate Measurement Devices		
a. Liquid Radwaste Effluent Line (FT-0018), (FT-1035), or (FT-1036)	1	40
b. Steam Generator Blowdown Effluent Line (FT-0021)	1	40
c. Flow to Blowdown Sump (AFQI-7620, FI7620A)	1	40

a. All requirements in this table apply to each unit.

Table 2-1 (contd). Notation for Table 2-1 — ACTION Statements

ACTION 37 — With the number of channels OPERABLE less than required by the Minimum Channels OPERABLE requirement, effluent releases may continue provided that prior to initiating a release:

a. At least two independent samples are analyzed in accordance with Section 2.1.2.3, and

b. At least two technically qualified members of the Facility Staff independently verify the discharge line valving and the release rate calculations.

Otherwise, suspend release of radioactive effluents via this pathway.

ACTION 38 — With the number of channels OPERABLE less than required by the Minimum Channels OPERABLE requirement, effluent releases via this pathway may continue provided grab samples are analyzed for gross radioactivity at a MINIMUM DETECTABLE CONCENTRATION no higher than 1×10^{-7} μCi/mL using gross beta/gamma counting or 5×10^{-7} μCi/mL for the principal gamma emitters using gamma-ray spectroscopy.

a. At least once per 12 hours when the specific activity of the secondary coolant is greater than 0.01 μCi/gram DOSE EQUIVALENT I-131.

b. At least once per 24 hours when the specific activity of the secondary coolant is less than or equal to 0.01 μCi/gram DOSE EQUIVALENT I-131.

ACTION 39 — With the number of channels OPERABLE less than required by the Minimum Channels OPERABLE requirement, effluent releases via this pathway may continue provided that, at least once per 12 hours, grab samples are collected and analyzed for radioactivity at a MINIMUM DETECTABLE CONCENTRATION no higher than 1×10^{-7} μCi/mL using gross beta/gamma counting or 5×10^{-7} μCi/mL for the principal gamma emitters using gamma-ray spectroscopy.

ACTION 40 — With the number of channels OPERABLE less than required by the Minimum Channels OPERABLE requirement, effluent releases via this pathway may continue provided the flowrate is estimated at least once per 4 hours during actual releases. Pump curves generated in place may be used to estimate flow.

Table 2-2. Radioactive Liquid Effluent Monitoring Instrumentation Surveillance Requirements

Instrument	Surveillance Requirements[d]			
	CHANNEL CHECK	SOURCE CHECK	CHANNEL CALIBRATION	CHANNEL OPERATIONAL TEST
1. Radwaste Monitors Providing Alarm and Automatic Termination of Release				
a. Liquid Radwaste Effluent Line (RE-0018)	D	P	R[b]	Q[a(1)]
b. Steam Generator Blowdown Effluent Line (RE-0021)	D	M	R[b]	Q[a(1)]
c. Turbine Building Effluent Line (RE-0848)	D	M	R[b]	Q[a(1)]
2. Radwaste Monitors Providing Alarm, but Not Automatic Termination of Release				
NSCW Effluent Line (RE-0020 A&B)	D	M	R[b]	Q[a(2)]
3. Flowrate Measurement Devices				
a. Liquid Radwaste Effluent Line (FT-0018), (FT-1084 A/B), or (FT-1085 A/B)	D[c]	NA	R	NA
b. Steam Generator Blowdown Effluent Line (FT-0021)	D[c]	NA	R	NA
c. Flow to Blowdown Sump (AFQI-7620, FI7620A)	D[c]	NA	R	Q

Table 2-2 (contd). Notation for Table 2-2

a. In addition to the basic functions of a CHANNEL OPERATIONAL TEST (Section 10.2):

(1) The CHANNEL OPERATIONAL TEST shall also demonstrate that automatic isolation of this pathway and control room annunciation occurs (for item a. below only); and control room CRT indication occurs (if any of the following conditions exist):

(a) Instrument indicates measured levels above the alarm/trip setpoint;

(b) Instrument indicates an "Equipment Trouble" alarm;

(c) Instrument indicates a "Low" alarm; or

(d) Instrument indicates channel "Deactivated".

(2) The CHANNEL OPERATIONAL TEST shall also demonstrate that control room annunciation occurs (for item a. below only); and that control room CRT indication occurs (if any of the following conditions exist):

(a) Instrument indicates measured levels above the alarm/trip setpoint;

(b) Instrument indicates an "Equipment Trouble" alarm;

(c) Instrument indicates a "Low" alarm; or

(d) Instrument indicates channel "Deactivated".

b. The initial CHANNEL CALIBRATION shall be performed using one or more of the reference standards certified by the National Institute of Standards and Technology or using standards that have been obtained from suppliers that participate in measurements assurance activities with NIST. These standards shall permit calibrating the system over its intended range of energy and measurement range. For subsequent CHANNEL CALIBRATION, sources that have been related to the initial calibration shall be used.

c. CHANNEL CHECK shall consist of verifying indication of flow during periods of release. CHANNEL CHECK shall be made at least once per 24 hours on days on which continuous, periodic, or batch releases are made.

d. All requirements in this table apply to each unit.

2.1.2 Liquid Effluent Concentration Control

In accordance with Technical Specifications 5.5.4.b and 5.5.4.c, the concentration of radioactive material released in liquid effluents to UNRESTRICTED AREAS shall be limited at all times to ten times the concentrations specified in 10 CFR 20, Appendix B, Table 2, Column 2 for radionuclides other than dissolved or entrained noble gases. For dissolved or entrained noble gases, the concentration shall be limited to 1×10^{-4} μCi/mL total activity.

2.1.2.1 Applicability

This limit applies at all times.

2.1.2.2 Actions

With the concentration of radioactive material released in liquid effluents to UNRESTRICTED AREAS exceeding the limits stated in Section 2.1.2, immediately restore the concentration to within the stated limits.

This control does not affect shutdown requirements or MODE changes.

2.1.2.3 Surveillance Requirements

The radioactivity content of each batch of radioactive liquid waste shall be determined by sampling and analysis in accordance with Table 2-3. The results of radioactive analyses shall be used with the calculational methods in Section 2.3 to assure that the concentration at the point of release is maintained within the limits of Section 2.1.2.

2.1.2.4 Basis

This control is provided to ensure that the concentration of radioactive materials released in liquid waste effluents to UNRESTRICTED AREAS will be less than ten times the concentration levels specified in 10 CFR 20, Appendix B, Table 2, Column 2. This limitation provides additional assurance that the levels of radioactive materials in bodies of water in UNRESTRICTED AREAS will result in exposures within (1) the Section II.A design objectives of Appendix I, 10 CFR 50, to a MEMBER OF THE PUBLIC, and (2) the limits of 10 CFR 20.1301 to the population. The concentration limit for dissolved or entrained noble gases is based upon the assumption that Xe-135 is the controlling radioisotope and its MPC in air (submersion) was converted to an equivalent concentration in water using the methods described in International Commission on Radiological Protection (ICRP) Publication 2 (1959). The resulting concentration of 2×10^{-4} was then

multiplied by the ratio of the effluent concentration limit for Xe-135, stated in Appendix B, Table 2, Column 1 of 10 CFR 20 (paragraphs 20.1001 to 20.2401), to the MPC for Xe-135, stated in Appendix B, Table II, Column 1 of 10 CFR 20 (paragraphs 20.1 to 20.601), to obtain the limiting concentration of 1×10^{-4} μCi/mL.

Table 2-3. Radioactive Liquid Waste Sampling and Analysis Program

Liquid Release Type	Sampling and Analysis Requirements[a,b]			
	Sampling FREQUENCY	Minimum Analysis FREQUENCY	Type of Activity Analysis	MINIMUM DETECTABLE CONCENTRATION (MDC) (μCi/mL)
A. BATCH RELEASES				
1. Waste Monitor Tank 2. Drainage of Systems	P Each BATCH	P Each BATCH	PRINCIPAL GAMMA EMITTERS I-131	5 E-7 1 E-6
	P One BATCH/M	M	Dissolved and Entrained Gases (Gamma Emitters)	1 E-5
	P Each BATCH	M COMPOSITE	H-3 Gross Alpha	1 E-5 1 E-7
	P Each BATCH	Q COMPOSITE	Sr-89, Sr-90 Fe-55	5 E-8 1 E-6
B. CONTINUOUS RELEASES				
Waste Water Retention Basin[c]	Continuous	W COMPOSITE	PRINCIPAL GAMMA EMITTERS I-131	5 E-7 1 E-6
	M Grab Sample	M	Dissolved and Entrained Gases (Gamma Emitters)	1 E-5
	Continuous	M COMPOSITE	H-3 Gross Alpha	1 E-5 1 E-7
	Continuous	Q COMPOSITE	Sr-89, Sr-90 Fe-55	5 E-8 1 E-6

Table 2-3 (contd). Notation for Table 2-3

a. All requirements in this table apply to each unit.

b. Terms printed in all capital letters are defined in Chapter 10.

c. The WWRB will not be considered a release point until there is a confirmed primary to secondary leak. Once a primary to secondary leak has been confirmed, this composite shall be analyzed as specified until the leak is repaired. This surveillance will continue until three consecutive weekly composite samples have shown no activity above the MDC.

2.1.3 Liquid Effluent Dose Control

In accordance with Technical Specifications 5.5.4.d and 5.5.4.e, the dose or dose commitment to a MEMBER OF THE PUBLIC from radioactive materials in liquid effluents released, from each unit, to UNRESTRICTED AREAS shall be limited:

a. During any calendar quarter to less than or equal to 1.5 mrem to the total body and to less than or equal to 5 mrem to any organ, and

b. During any calendar year to less than or equal to 3 mrem to the total body and to less than or equal to 10 mrem to any organ.

2.1.3.1 Applicability

These limits apply at all times.

2.1.3.2 Actions

With the calculated dose from the release of radioactive materials in liquid effluents exceeding any of the limits of Section 2.1.3, prepare and submit to the Nuclear Regulatory Commission within 30 days a special report which identifies the cause(s) for exceeding the limit(s); defines the corrective actions to be taken to reduce the releases; and defines the proposed corrective actions to be taken to assure that subsequent releases will be in compliance with the limits of Section 2.1.3.

This control does not affect shutdown requirements or MODE changes.

2.1.3.3 Surveillance Requirements

At least once per 31 days, cumulative dose contributions from liquid effluents for the current calendar quarter and the current calendar year shall be determined, for each unit, in accordance with Section 2.4.

2.1.3.4 Basis

This control is provided to implement the requirements of Sections II.A, III.A and IV.A of Appendix I, 10 CFR Part 50. The limits stated in Section 2.1.3 implement the guides set forth in Section II.A of Appendix I. The ACTIONS stated in Section 2.1.3.2 provide the required operating flexibility and at the same time implement the guides set forth in Section IV.A of Appendix I to assure that the releases of radioactive material in liquid effluents will be kept "as low as is reasonably achievable." Also, for fresh water sites with drinking water

supplies that can be potentially affected by plant operations, there is reasonable assurance that the operation of the facility will not result in radionuclide concentrations in the finished drinking water that are in excess of the requirements of 40 CFR Part 141. The dose calculations in Section 2.4 implement the requirements in Section III.A of Appendix I, which state that conformance with the guides of Appendix I be shown by calculational procedures based on models and data, such that the actual exposure of a MEMBER OF THE PUBLIC through appropriate pathways is unlikely to be substantially underestimated. The equations specified in Section 2.4 for calculating the doses due to the actual release rates of radioactive materials in liquid effluents are consistent with the methodology provided in Regulatory Guide 1.109 (Reference 3) and Regulatory Guide 1.113 (Reference 6).

This control applies to the release of liquid effluents from each unit at the site. The liquid effluents from shared LIQUID RADWASTE TREATMENT SYSTEMs are to be proportioned between the units.

2.1.4 Liquid Radwaste Treatment System Control

In accordance with Technical Specification 5.5.4.f, the LIQUID RADWASTE TREATMENT SYSTEM shall be OPERABLE. The appropriate portions of the system shall be used to reduce radioactivity in liquid wastes prior to their discharge when the projected doses due to the liquid effluent, from each unit, to UNRESTRICTED AREAS would exceed 0.06 mrem to the total body or 0.2 mrem to any organ of a MEMBER OF THE PUBLIC in 31 days.

2.1.4.1 Applicability

This limit applies at all times.

2.1.4.2 Actions

With radioactive liquid waste being discharged without treatment and in excess of the above limits and any portion of the LIQUID RADWASTE TREATMENT SYSTEM not in operation, prepare and submit to the Nuclear Regulatory Commission within 30 days a special report which includes the following information:

a. Explanation of why liquid radwaste was being discharged without treatment, identification of any inoperable equipment or subsystems and the reason for the inoperability,

b. Action(s) taken to restore the inoperable equipment to OPERABLE status, and

c. Summary description of action(s) taken to prevent a recurrence.

This control does not affect shutdown requirements or MODE changes.

2.1.4.3 Surveillance Requirements

Doses due to liquid releases to UNRESTRICTED AREAS shall be projected at least once per 31 days, in accordance with Section 2.5, during periods in which the LIQUID RADWASTE TREATMENT SYSTEMs are not being fully utilized.

The LIQUID RADWASTE TREATMENT SYSTEM shall be demonstrated OPERABLE by meeting the controls of Sections 2.1.2 and 2.1.3.

2.1.4.4 Basis

The OPERABILITY of the LIQUID RADWASTE TREATMENT SYSTEM ensures that this system will be available for use whenever liquid effluents require treatment prior to release to the UNRESTRICTED AREAS. The requirement that the appropriate portions of this system be used when specified provides assurance that the releases of radioactive materials in liquid effluents will be kept "as low as is reasonably achievable." This control implements the requirements of 10 CFR Part 50.36a, General Design Criterion 60 of Appendix A to 10 CFR Part 50, and the design objective given in Section II.D of Appendix I to 10 CFR Part 50. The specified limits governing the use of appropriate portions of the LIQUID RADWASTE TREATMENT SYSTEM were specified as a suitable fraction of the dose design objectives set forth in Section II.A of Appendix I, 10 CFR Part 50, for liquid effluents.

This control applies to the release of radioactive materials in liquid effluents from each unit at the site. For units with shared radwaste systems, the liquid effluents from the shared system are to be proportioned among the units sharing that system.

2.1.5 Major Changes to Liquid Radioactive Waste Treatment Systems

Licensee initiated MAJOR CHANGES TO LIQUID RADIOACTIVE WASTE TREATMENT SYSTEMS:

a. Shall be reported to the Nuclear Regulatory Commission in the Radioactive Effluent Release Report for the period in which the change was implemented. The discussion of each change shall contain the information described in Section 7.2.2.7.

b. Shall become effective upon review and approval by the General Manager – Nuclear Plant.

2.2 LIQUID RADWASTE TREATMENT SYSTEM

The Vogtle Electric Generating Plant is located on the west bank of the Savannah River approximately 151 river miles from the Atlantic Ocean. There are two pressurized water reactors on the site. Each unit is served by a separate LIQUID RADWASTE TREATMENT SYSTEM; however, certain components are shared between the two systems. Schematics of the LIQUID RADWASTE TREATMENT SYSTEMs are presented in Figure 2-1 and Figure 2-2. Liquid discharge pathways are shown in Figure 2-3.

All liquid radwastes treated by the LIQUID RADWASTE TREATMENT SYSTEM are collected in 5,000-gallon or 20,000-gallon waste monitor tanks. Releases from the waste monitor tanks are to the discharge line from the blowdown sump, and from there to the Savannah River. The blowdown sump also receives input from the waste water retention basins, turbine plant cooling water blowdown, and nuclear service cooling water blowdown. Additional dilution water is available from the cooling tower makeup water bypass line.

Although no significant quantities of radioactivity are expected in the nuclear service cooling water, the steam generator blowdown processing system, or the turbine building drain system, these effluent pathways are monitored as a precautionary measure. The monitors serving the latter two pathways provide for automatic termination of releases from these systems in the event that radioactivity is detected above predetermined levels. These two systems discharge to the waste water retention basin. Sampling and analysis of releases via all three of these pathways must be sufficient to ensure that the liquid effluent dose limits specified in the controls of Section 2.1.3 are not exceeded.

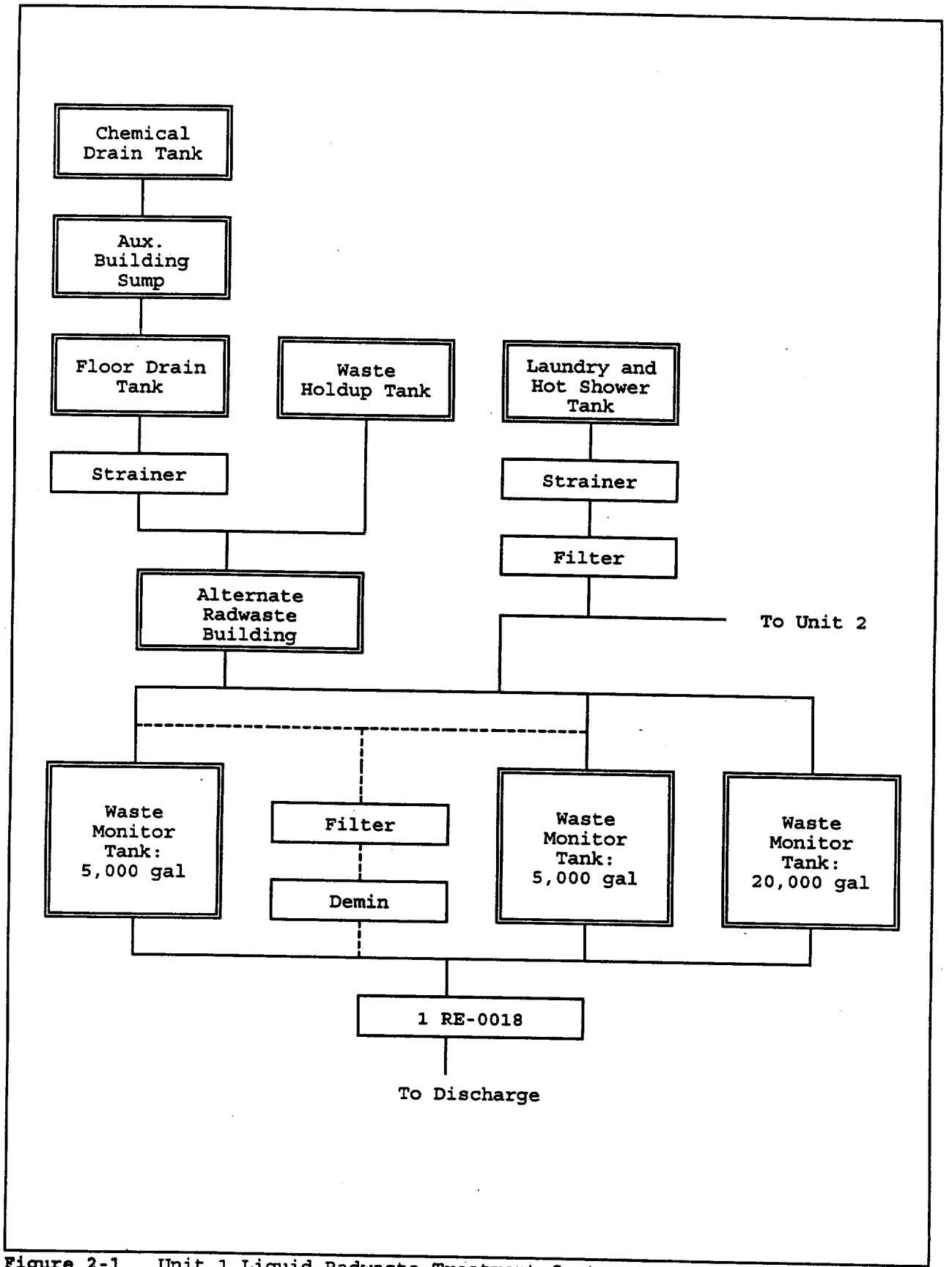

Figure 2-1. Unit 1 Liquid Radwaste Treatment System

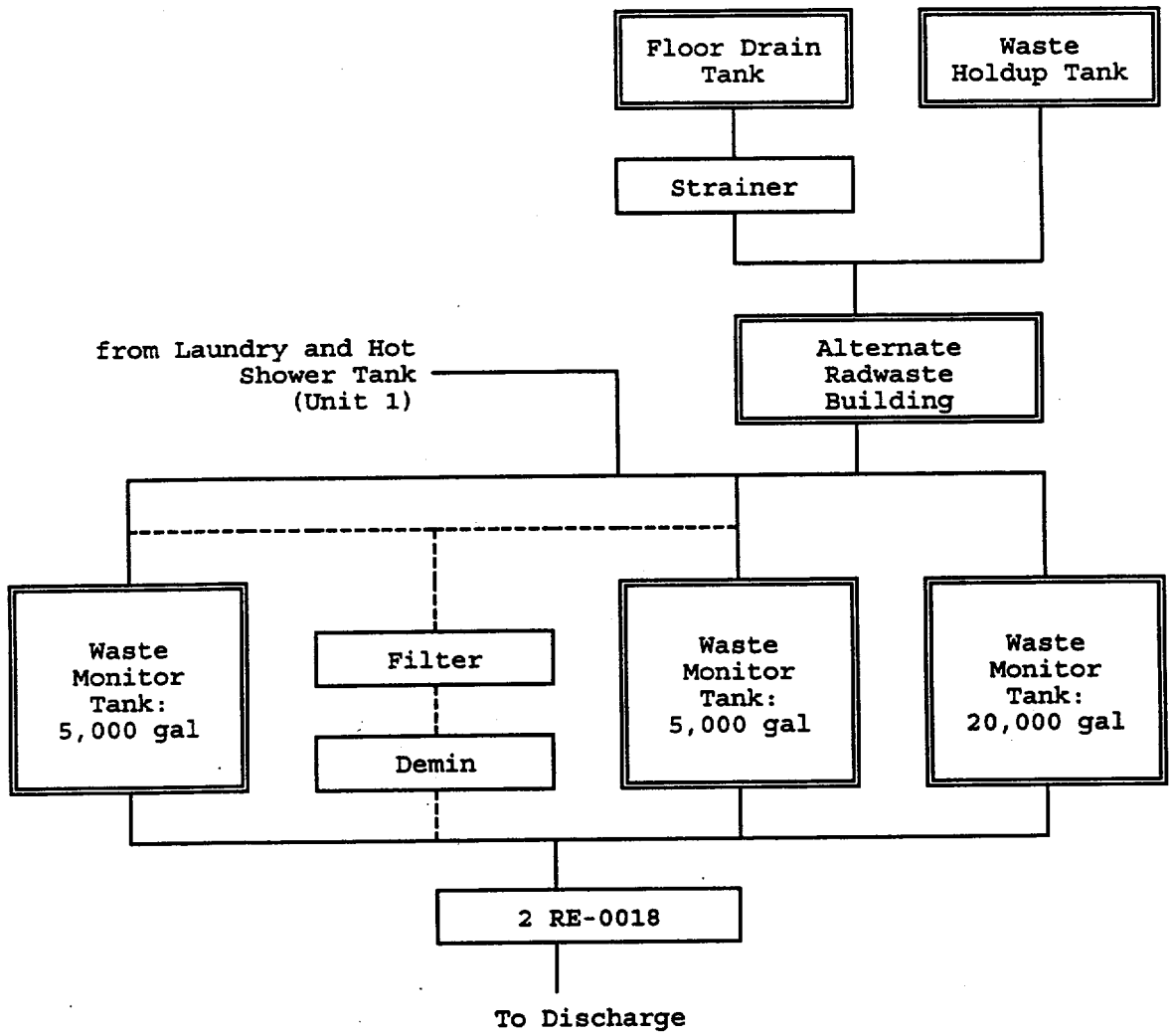

Figure 2-2. Unit 2 Liquid Radwaste Treatment System

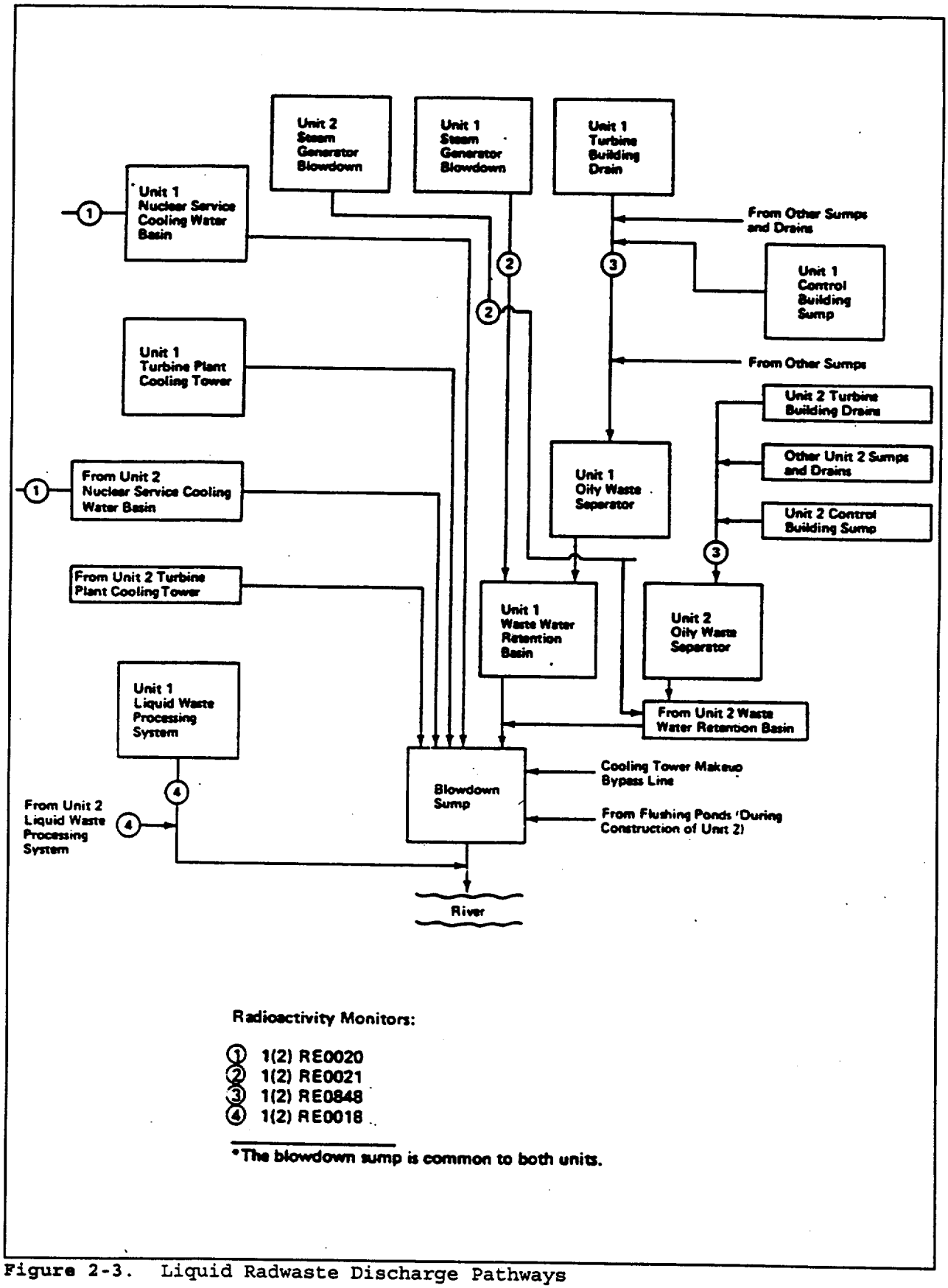

Figure 2-3. Liquid Radwaste Discharge Pathways

2.3 LIQUID EFFLUENT MONITOR SETPOINTS

2.3.1 General Provisions Regarding Setpoints

Liquid monitor setpoints calculated in accordance with the methodology presented in this section will be regarded as upper bounds for the actual high alarm setpoints. That is, a lower value for the high alarm setpoint may be established or retained on the monitor, if desired. Intermediate level setpoints should be established at an appropriate level to give sufficient warning prior to reaching the high alarm setpoint. If no release is planned for a particular pathway, or if there is no detectable activity in the planned release, the monitor setpoint should be established as close to background as practical to prevent spurious alarms, and yet alarm should an inadvertent release occur.

Two basic setpoint methodologies are presented below. For radwaste system discharge monitors, setpoints are determined to assure that the limits of Section 2.1.2 are not exceeded. For monitors on streams that are not expected to contain significant radioactivity, the purpose of the monitor setpoints is to cause an alarm on low levels of radioactivity, and to terminate the release where this is possible. Section 2.1.1 establishes the requirements for liquid effluent monitoring instrumentation. Table 2-4 lists the monitors for which each of the setpoint methodologies is applicable.

Table 2-4. Applicability of Liquid Monitor Setpoint Methodologies

Liquid Radwaste Discharge Monitors

Setpoint Method: Section 2.3.2

Release Type: BATCH

Unit 1 or Unit 2 Liquid Waste Treatment System Effluent
Monitor: 1RE-0018 / 2RE-0018

Normally Low-Radioactivity Streams with Termination or Diversion upon Alarm

Setpoint Method: Section 2.3.3

Release Type: CONTINUOUS

Unit 1 or Unit 2 Steam Generator Blowdown Effluent
Monitor: 1RE-0021 / 2RE-0021

Unit 1 or Unit 2 Turbine Building Drain Effluent
Monitor: 1RE-0848 / 2RE-0848

Normally Low-Radioactivity Streams with Alarm Only

Setpoint Method: Section 2.3.3

Release Type: CONTINUOUS

Unit 1 or Unit 2 Nuclear Service Cooling Water System Effluent
Monitors (2 per unit): 1RE-0020 A and B
2RE-0020 A and B

2.3.2 Setpoints for Radwaste System Discharge Monitors

2.3.2.1 Overview of Method

LIQUID RADWASTE TREATMENT SYSTEM effluent line radioactivity monitors are intended to provide alarm and automatic termination of release prior to exceeding the limits specified in Section 2.1.2 at the point of release of the diluted effluent into the UNRESTRICTED AREA. Therefore, their alarm/trip setpoints are established to ensure compliance with the following equation (equation adapted from Addendum to Reference 1):

$$\frac{c \cdot f}{F + f} \leq TF \cdot C_{ECL} \qquad (2.1)$$

where:

C_{ECL} = the Effluent Concentration Limit corresponding to the mix of radionuclides in the effluent being considered for discharge, in μCi/mL.

c = the setpoint, in μCi/mL, of the radioactivity monitor measuring the concentration of radioactivity in the effluent line prior to dilution and subsequent release. The setpoint represents a concentration which, if exceeded, could result in concentrations exceeding the limits of Section 2.1.2 in the UNRESTRICTED AREA.

f = the effluent flowrate at the location of the radioactivity monitor, in gpm.

F = the dilution stream flowrate which can be assured prior to the release point to the UNRESTRICTED AREA, in gpm. A predetermined dilution flowrate must be assured for use in the calculation of the radioactivity monitor setpoint.

TF = the tolerance factor selected to allow flexibility in the establishment of a practical monitor setpoint which could accommodate effluent releases at concentrations higher than the ECL values stated in 10 CFR 20, Appendix B, Table 2, Column 2; the tolerance factor must not exceed a value of 10.

While equation (2.1) shows the relationships of the critical parameters that determine the setpoint, it cannot be applied practically to a mixture of radio-

nuclides with different Effluent Concentration Limits (ECLs). For a mixture of radionuclides, equation (2.1) is satisfied in a practicable manner based on the calculated ECL fraction of the radionuclide mixture and the dilution stream flowrate that can be assured for the duration of the release (F_d), by calculating the maximum permissible effluent flowrate (f_m) and the radioactivity monitor setpoint (c).

The setpoint method presented below is applicable to the release of only one tank of liquid radwaste per reactor unit at a given time. Liquid releases must be controlled administratively to ensure that this condition is met; otherwise, the setpoint method may not ensure that the limits of Section 2.1.2 are not exceeded.

2.3.2.2 Setpoint Calculation Steps

Step 1: Determine the radionuclide concentrations in the liquid waste being considered for release in accordance with the sampling and analysis requirements of Section 2.1.2.

All liquid radwastes treated by the LIQUID RADWASTE TREATMENT SYSTEM are collected in waste monitor tanks for sampling and analysis. The 5,000-gallon waste monitor tanks are recirculated for a minimum of 30 minutes, and the 20,000-gallon waste monitor tanks are recirculated for a minimum of 45 minutes. This mixing assures that a representative sample can be taken from the tank.

The total concentration of the liquid waste is determined by the results of all required analyses on the collected sample, as follows:

$$\sum_i C_i = C_a + \sum_s C_s + C_f + C_t + \sum_g C_g \qquad (2.2)$$

where:

C_a = the gross concentration of alpha emitters in the liquid waste, not less than that measured in the most recent applicable composite sample.

C_s = the concentration of strontium radioisotope s (Sr-89 or Sr-90) in the liquid waste, not less than that measured in the most recent applicable composite sample.

C_f = the concentration of Fe-55 in the liquid waste, not less than that measured in the most recent applicable composite sample.

C_t = the concentration of H-3 in the liquid waste, not less than that measured in the most recent applicable composite sample.

C_g = the concentration of gamma emitter g in the liquid waste as measured by gamma ray spectroscopy performed on the sample for the release under consideration.

The C_g term will be included in the analysis of each waste sample; terms for gross concentrations of alpha emitters, Sr-89, Sr-90, Fe-55, and tritium will be included in accordance with the sampling and analysis program required for the waste stream (see Section 2.1.2). For each analysis, only radionuclides identified and detected above background for the given measurement should be included in the calculation. When using the alternate setpoint methodology of step 5.b, the historical maximum values of C_a, C_s, C_f, and C_t shall be used.

Step 2: Determine the required dilution factor for the mix of radionuclides detected in the waste.

Measured radionuclide concentrations are used to calculate ECL fractions. The ECL fractions are used along with a safety factor to calculate the required dilution factor; this is the minimum ratio of dilution flowrate to waste flowrate that must be maintained throughout the release to ensure that the limits of Section 2.1.2 are not exceeded at the point of discharge into the UNRESTRICTED AREA. The required dilution factor, RDF, is calculated as the sum of the dilution factors required for gamma emitters (RDF_γ) and for non-gamma-emitters ($RDF_{n\gamma}$):

$$RDF = \left[\sum_i \frac{C_i}{ECL_i}\right] + [(SF)\ (TF)] \qquad (2.3)$$

$$= RDF_\gamma + RDF_{n\gamma}$$

$$RDF_\gamma = \frac{\left[\sum_g \frac{C_g}{ECL_g}\right]}{(SF)\ (TF)} \qquad (2.4)$$

where:

$$RDF_{n\gamma} = \frac{\left[\frac{C_a}{ECL_a} + \sum_s \frac{C_s}{ECL_s} + \frac{C_f}{ECL_f} + \frac{C_t}{ECL_t} \right]}{(SF) \quad (TF)} \tag{2.5}$$

C_i = the measured concentration of radionuclide i as defined in step 1, in μCi/mL. The C_a, C_s, C_f, and C_t terms will be included in the calculation as appropriate.

ECL_i = the Effluent Concentration Limit for radionuclide i from 10 CFR Part 20, Appendix B, Table 2, Column 2 (except for noble gases as discussed below). In the absence of information regarding the solubility classification of a given radionuclide in the waste stream, the solubility class with the lowest ECL shall be assumed. For dissolved or entrained noble gases, the concentration shall be limited to 1×10^{-4} μCi/mL. For gross alpha, the ECL shall be 2×10^{-9} μCi/mL; if specific alpha-emitting radionuclides are measured, the ECL for the specific radionuclide(s) should be used.

SF = the safety factor selected to compensate for statistical fluctuations and errors of measurement. The value for the safety factor must be between 0 and 1. A value of 0.5 is reasonable for liquid releases; a more precise value may be developed if desired.

TF = the tolerance factor (as defined in Section 2.3.2.1).

Step 3: Determine the release-specific assured dilution stream flowrate.

Determine the dilution stream flowrate that can be assured during the release period, designated F_d; this value is the setpoint for the dilution stream flowrate measurement device.

If simultaneous radioactive releases are planned from the same or different reactor units, the dilution stream must be allocated among all the simultaneous releases. There will only be one such release per unit at a given time, unless there is detectable radioactivity in one of the normally low-radioactivity streams (see Section 2.3.3). Allocation of the dilution stream to multiple release paths is accomplished as follows:

$$F_{dp} = F_d \, (AF_p) \tag{2.6}$$

where:

F_{dp} = the dilution flowrate allocated to release pathway p, in gpm.

AF_p = the dilution allocation factor for release pathway p. AF_p may be assigned any value between 0 and 1 for each active release pathway, under the condition that the sum of the AF_p for all active release pathways for the entire plant site does not exceed 1.

F_d = the assured minimum dilution flow for the unit, in gpm.

In the normal case in which the only release pathways with detectable radioactivity are the LIQUID RADWASTE TREATMENT SYSTEMs of each unit, AF_p for each unit may be assigned the value of 0.5 to permit releases from either unit to be made without regard to any releases from the other unit; if only one unit's LIQUID RADWASTE TREATMENT SYSTEM is releasing at a given time, its AF_p may be increased proportionately. If more precise allocation factor values are desired, they may be determined based on the relative radiological impact of each active release pathway; this may be approximated by multiplying the RDF of each effluent stream by its respective planned release flowrate, and comparing these values. If only one simultaneous release is being made, its AF_p may be assigned the value of 1, making F_{dp} equal to F_d.

For the case where RDF ≤ 1, the planned release meets the limits of Section 2.1.2 without dilution, and *could* be released with any desired effluent flowrate and dilution flowrate. However, in order to maintain individual doses due to liquid effluent releases as low as is reasonably achievable, no releases with detectable radioactivity *should* be made if the assured dilution flowrate, F_d, is less than 12,000 gpm.

<u>Step 4</u>: Determine the maximum allowable waste discharge flowrate.

For the case where RDF > 1, the maximum permissible effluent discharge flowrate for this release pathway, f_{mp} (in gpm), is calculated as follows:

$$f_{mp} = \frac{F_{dp}}{(RDF - 1)} \qquad (2.7)$$

For the case RDF ≤ 1, equation (2.7) is not valid. However, as discussed above, when RDF ≤ 1, the release may be made at full discharge pump capacity; the radio-

activity monitor setpoint must still be calculated in accordance with Step 5 below.

NOTE 1: Discharge flowrates are actually limited by the discharge pump capacity. When the calculated maximum permissible release flowrate exceeds the pump capacity, the release may be made at full capacity. Discharge flowrates less than the pump capacity must be achieved by throttling if this is available; if throttling is not available, the release may not be made as planned.

NOTE 2: If, at the time of the planned release, there is detectable radioactivity due to plant operations in the dilution stream, the diluting capacity of the dilution stream is diminished. (In addition, sampling and analysis of the other radioactive effluents affecting the dilution stream must be sufficient to ensure that the liquid effluent dose limits specified in the controls of Section 2.1.3 are not exceeded.) Under these conditions, equation (2.7) must be modified to account for the radioactivity present in the dilution stream prior to the introduction of the planned release:

$$f_{mp} = \frac{F_{dp}}{(RDF - 1)} \left(1 - \sum_r \left[\frac{f_r}{F_d} \sum_i \left(\frac{C_{ir}}{ECL_i} \right) \right] \right) \qquad (2.8)$$

where:

C_{ir} = the measured concentration of radionuclide i in release pathway r that is contributing to radioactivity in the dilution stream.

f_r = the effluent discharge flowrate of release pathway r.

If the entire dilution stream contains detectable activity due to plant operations, whether or not its source is identified, $f_r = F_d$, and C_{ir} is the concentration in the total dilution system. This note does not apply: a) if the RDF of the planned release is ≤ 1; or b) if the release contributing radioactivity to the dilution stream has been accounted for by the assignment of an allocation factor.

Step 5: Determine the maximum radioactivity monitor setpoint concentration.

Based on the values determined in previous steps, the radioactivity monitor setpoint for the planned release is calculated to ensure that the limits of Section 2.1.2 will not be exceeded. Because the radioactivity monitor responds primarily to gamma radiation, the monitor setpoint c_p for release pathway p (in μCi/mL) is based on the concentration of gamma emitters in the waste stream, as follows:

$$c_p = A_p \sum_g c_g \tag{2.9}$$

where:

A_p = an adjustment factor which will allow the setpoint to be established in a practical manner to prevent spurious alarms while allowing a margin between measured concentrations and the limits of Section 2.1.2.

Step 5.a. If the concentration of gamma emitters in the effluent to be released is sufficient that the high alarm setpoint can be established at a level that will prevent spurious alarms, A_p should be calculated as follows:

$$\begin{aligned} A_p &= \frac{1}{RDF} \times ADF \\ &= \frac{1}{RDF} \times \frac{(F_{dp}' + f_{ap})}{f_{ap}} \end{aligned} \tag{2.10}$$

where:

ADF = the assured dilution factor.

f_{ap} = the anticipated actual discharge flowrate for the planned release (in gpm), a value less than f_{mp}. The release must then be controlled so that the actual effluent discharge flowrate does not exceed f_{ap} at any time.

Step 5.b. Alternatively, A_p may be calculated as follows:

$$A_p = \frac{ADF - RDF_{n\gamma}}{RDF_{\gamma}} \qquad (2.11)$$

Step 5.c. Evaluate the computed value of A_p as follows:

If $A_p \geq 1$, calculate the monitor setpoint, c_p. However, if c_p is within about 10 percent of C_g, it may be impractical to use this value of c_p. This situation indicates that measured concentrations are approaching values which would cause limits of Section 2.1.2 to be exceeded. Therefore, steps should be taken to reduce potential concentrations at the point of discharge; these steps may include decreasing the planned effluent discharge flowrate, increasing the dilution stream flowrate, postponing simultaneous releases, and/or decreasing the effluent concentrations by further processing the liquid planned for release. Alternatively, allocation factors for the active liquid release pathways may be reassigned. When one or more of these actions has been taken, repeat Steps 1-5 to calculate a new radioactivity monitor setpoint.

If $A_p < 1$, the release may not be made as planned. Consider the alternatives discussed in the paragraph above, and calculate a new setpoint based on the results of the actions taken.

2.3.2.3 Use of the Calculated Setpoint

The setpoint calculated above is in the units μCi/mL. The monitor actually measures a count rate, subtracts a predetermined background count rate, and multiplies by a calibration factor to convert from count rate to μCi/mL.

Initial calibration of the monitors by the manufacturer and Georgia Power Company utilized NIST-traceable liquid solutions with gamma ray emissions over the range 0.08 to 1.33 MeV, in the exact geometry of each production monitor. The calibration factor is a function of the radionuclide mix in the liquid to be released, and will be calculated for the monitor based on the results of the pre-release sample results from the laboratory gamma-ray spectrometer system. The mix-dependent calibration factor will be used as the gain factor in the PERMS

monitor, or used to modify the calculated base monitor setpoint so that the default calibration factor in the PERMS monitor can be left unchanged.

Notwithstanding the initial calibration, monitor calibration data for conversion between count rate and concentration *may* include operational data obtained from determining the monitor response to stream concentrations measured by liquid sample analysis. In all cases, monitor background must be controlled so that the monitor is capable of responding to concentrations in the range of the setpoint value.

2.3.3 Setpoints for Monitors on Normally Low-Radioactivity Streams

Radioactivity in these streams (listed in Table 2-4 above) is expected to be at very low levels, generally below detection limits. Accordingly, the purpose of these monitors is to alarm upon the occurrence of significant radioactivity in these streams, and to terminate or divert the release where this is possible.

2.3.3.1 Normal Conditions

When radioactivity in one of these streams is at its normal low level, its radioactivity monitor setpoint should be established as close to background as practical to prevent spurious alarms, and yet alarm should an inadvertent release occur.

2.3.3.2 Conditions Requiring an Elevated Setpoint

Under the following conditions, radionuclide concentrations must be determined and an elevated radioactivity monitor setpoint determined for these pathways:

- For streams that can be diverted or isolated, a new monitor setpoint must be established when it is desired to discharge the stream directly to the dilution water even though the radioactivity in the stream exceeds the level which would normally be diverted or isolated.

- For streams that cannot be diverted or isolated, a new monitor setpoint must be established whenever: the radioactivity in the stream becomes detectable above the background levels of the applicable laboratory analyses; or the associated radioactivity monitor detects activity in the stream at levels above the established alarm setpoint.

When an elevated monitor setpoint is required for any of these effluent streams, it should be determined in the same manner as described in Section 2.3.2.

However, special consideration must be given to Step 3. An allocation factor must be assigned to the normally low-radioactivity release pathway under consideration, and allocation factors for other release pathways discharging simultaneously must be adjusted downward (if necessary) to ensure that the sum of the allocation factors does not exceed 1. Sampling and analysis of the normally low-radioactivity streams must be sufficient to ensure that the liquid effluent dose limits specified in the controls of Section 2.1.3 are not exceeded.

2.4 LIQUID EFFLUENT DOSE CALCULATIONS

The following sub-sections present the methods required for liquid effluent dose calculations, in deepening levels of detail. Applicable site-specific pathways and parameter values for the calculation of D_τ, $A_{i\tau}$, and CF_{iv} are summarized in Table 2-5.

2.4.1 Calculation of Dose

The dose limits for a MEMBER OF THE PUBLIC specified in Section 2.1.3 are on a per-unit basis. Therefore, the doses calculated in accordance with this section must be determined and recorded on a per-unit basis, including apportionment of releases shared between the two units.

For the purpose of implementing Section 2.1.3, the dose to the maximum exposed individual due to radionuclides identified in liquid effluents released from each unit to UNRESTRICTED AREAS will be calculated as follows (equation from Reference 1, page 15):

$$D_\tau = \sum_i A_{i\tau} \left[\sum_{l=1}^{m} \left(\Delta t_l \, C_{il} \, F_l \right) \right] \qquad (2.12)$$

where:

D_τ = the cumulative dose commitment to the total body or to any organ τ, in mrem, due to radioactivity in liquid effluents released during the total of the m time periods Δt_l.

$A_{i\tau}$ = the site-related adult ingestion dose commitment factor, for the total body or for any organ τ, due to identified radionuclide i, in (mrem·mL)/(h·μCi). Methods for the calculation of $A_{i\tau}$ are presented below in Section 2.4.2. The values of $A_{i\tau}$ to be used in dose calculations for releases from the plant site are listed in Table 2-8.

Δt_l = the length of time period l, over which C_{il} and F_l are averaged for liquid releases, in h.

C_{il} = the average concentration of radionuclide i in undiluted liquid effluent during time period l, in μCi/mL. Only radionuclides

identified and detected above background in their respective samples should be included in the calculation.

F_l = the near-field average dilution factor in the receiving water of the UNRESTRICTED AREA:

$$F_l = \frac{f_t}{F_t \times Z} \qquad (2.13)$$

where:

f_t = the average undiluted liquid waste flowrate actually observed during the period of radioactivity release, in gpm.

F_t = the average dilution stream flowrate actually observed during the period of radioactivity release, in gpm. If simultaneous releases from both units occur, the dilution stream flowrate F_t must be allocated between them. In such cases, F_l is unit-specific.

Z = the applicable dilution factor for the receiving water body, in the near field of the discharge structure, during the period of radioactivity release, from Table 2-5.

NOTE: In equation (2.13), the product ($F_t \times Z$) is limited to 1000 cfs (= 448,000 gpm) or less. (Reference 1, Section 4.3.)

2.4.2 Calculation of $A_{i\tau}$

The site-related adult ingestion dose commitment factor, $A_{i\tau}$, is calculated as follows (equation adapted from Reference 1, page 16, by addition of the irrigated garden vegetation pathway):

$$A_{i\tau} = 1.14 \times 10^5 \left(\frac{U_w}{D_w} e^{-\lambda_i t_w} + U_f BF_i e^{-\lambda_i t_f} + U_v CF_{iv} \right) DF_{i\tau} \qquad (2.14)$$

where:

1.14×10^5 = a units conversion factor, determined by:

10^6 pCi/μCi × 10^3 mL/L ÷ 8760 h/y.

U_w = the adult drinking water consumption rate applicable to the plant site (L/y).

D_w = the dilution factor from the near field of the discharge structure for the plant site to the potable water intake location.

λ_i = the decay constant for radionuclide i (h^{-1}). Values of λ_i used in effluent calculations should be based on decay data from a recognized and current source, such as Reference 20.

t_w = the transit time from release to receptor for potable water consumption (h).

U_f = the adult rate of fish consumption applicable to the plant site (kg/y).

BF_i = the bioaccumulation factor for radionuclide i applicable to freshwater fish in the receiving water body for the plant site, in (pCi/kg)/(pCi/L) = (L/kg). For specific values applicable to the plant site, see Table 2-6.

t_f = the transit time from release to receptor for fish consumption (h).

U_v = the adult consumption rate for irrigated garden vegetation applicable to the plant site (kg/y).

CF_{iv} = the concentration factor for radionuclide i in irrigated garden vegetation, as applicable to the vicinity of the plant site, in (pCi/kg)/(pCi/L). Methods for calculation of CF_{iv} are presented below in Section 2.4.3.

$DF_{i\tau}$ = the dose conversion factor for radionuclide i for adults, in organ τ (mrem/pCi). For specific values, see Table 2-7.

2.4.3 Calculation of CF_{iv}

The concentration factor for radionuclide i in irrigated garden vegetation, CF_{iv} in (L/kg), is calculated as follows:

- For radionuclides other than tritium (equation adapted from Reference 3, equations A-8 and A-9):

$$CF_{iv} = M \cdot I \left[\frac{r\,(1 - e^{-\lambda_{Ei}\, t_e})}{Y_v\, \lambda_{Ei}} + \frac{f_I\, B_{iv}\, (1 - e^{-\lambda_i\, t_b})}{P\, \lambda_i} \right] e^{-\lambda_i\, t_h} \qquad (2.15)$$

- For tritium (equation adapted from Reference 3, equations A-9 and A-10):

$$CF_{iv} = M \cdot L_v \qquad (2.16)$$

where:

M = the additional river dilution factor from the near field of the discharge structure for the plant site to the point of irrigation water usage.

I = the average irrigation rate during the growing season (L)/($m^2 \cdot h$).

r = the fraction of irrigation-deposited activity retained on the edible portions of leafy garden vegetation.

Y_v = the areal density (agricultural productivity) of leafy garden vegetation (kg/m^2)

f_I = the fraction of the year that garden vegetation is irrigated.

B_{iv} = the crop to soil concentration factor applicable to radionuclide i (pCi/kg garden vegetation)/(pCi/kg soil).

P = the effective surface density of soil (kg/m^2).

λ_i = the decay constant for radionuclide i (h^{-1}). Values of λ_i used in effluent calculations should be based on decay data from a recognized and current source, such as Reference 20.

λ_w = the rate constant for removal of activity from plant leaves by weathering (h^{-1}).

λ_{Ei} = the effective removal rate for activity deposited on crop leaves (h^{-1}) calculated as: $\lambda_{Ei} = \lambda_i + \lambda_w$.

t_e = the period of leafy garden vegetation exposure during the growing season (h).

t_b = the period of long-term buildup of activity in soil (h).

t_h = the time between harvest of garden vegetation and human consumption (h).

L_v = the water content of leafy garden vegetation edible parts (L/kg).

Table 2-5. Parameters for Calculation of Doses Due to Liquid Effluent Releases

Dose Calculation Receptor Locations:

Fish: Vicinity of plant discharge

Drinking Water: 112 miles downstream, at Beaufort, SC (Reference 12)

Irrigated Garden Vegetation: None (Reference 12)

Numerical Parameters:

Parameter	Value	Reference
Z	10, for May through December 20, for January through April	Ref. 11
U_w	730 L/y	Ref. 3
D_w	8	Ref. 7
t_w	48 h	Ref. 3, Sec. A.2; Ref. 8
U_f	21 kg/y	Ref. 3, Table E-5
t_f	24 h	Ref. 3, Sec. A.2
U_v	0 kg/y *	Ref. 12
M	1.0 +	
I	No value **	
r	0.25	Ref. 3, Table E-15
Y_v	2.0 kg/m^2	Ref. 3, Table E-15
f_I	1.0 +	
P	240 kg/m^2	Ref. 3, Table E-15
λ_w	0.0021 h^{-1} (i.e., half-life of 14 d)	Ref. 3, Table E-15
t_e	1440 h (= 60 d)	Ref. 3, Table E-15
t_b	1.31×10^5 h (= 15 y)	Ref. 3, Table E-15
t_h	24 h	Ref. 3, Table E-15
L_v	0.92 L/kg	Based on Ref. 21, Table 5.16 (for lettuce, cabbage, etc.)

* - Because there is no irrigated garden vegetation pathway downstream of the plant site, the consumption of irrigated garden vegetation is set to zero, and the other pathway parameters are defaults.

\+ - There is no established default value for this parameter. The most conservative physically realistic value is 1.0.

Table 2-6. Element Transfer Factors

Element	Freshwater Fish BF_i*
H	9.0 E-01
C	4.6 E+03
Na	1.0 E+02
P	3.0 E+03
Cr	2.0 E+02
Mn	4.0 E+02
Fe	1.0 E+02
Co	5.0 E+01
Ni	1.0 E+02
Cu	5.0 E+01
Zn	2.0 E+03
Br	4.2 E+02
Rb	2.0 E+03
Sr	3.0 E+01
Y	2.5 E+01
Zr	3.3 E+00
Nb	5.5 E+02
Mo	1.0 E+01
Tc	1.5 E+01
Ru	1.0 E+01
Rh	1.0 E+01
Ag	2.3 E+00
Sb	2.0 E+02
Te	4.0 E+02
I	1.5 E+01
Cs	2.0 E+03
Ba	4.0 E+00
La	2.5 E+01
Ce	1.0 E+00
Pr	2.5 E+01
Nd	2.5 E+01
W	1.2 E+03
Np	1.0 E+01

*- Bioaccumulation Factors for freshwater fish, in (pCi/kg)/(pCi/L). They are obtained from Reference 3 (Table A-1), except as follows: Reference 9 for P; Reference 2 (Table A-8) for Ag; and Reference 10 for Nb and Sb.

Table 2-7. Adult Ingestion Dose Factors

Nuclide	Bone	Liver	T. Body	Thyroid	Kidney	Lung	GI-LLI
H-3	No Data	1.05E-07	1.05E-07	1.05E-07	1.05E-07	1.05E-07	1.05E-07
C-14	2.84E-06	5.68E-07	5.68E-07	5.68E-07	5.68E-07	5.68E-07	5.68E-07
Na-24	1.70E-06	1.70E-06	1.70E-06	1.70E-06	1.70E-06	1.70E-06	1.70E-06
P-32	1.93E-04	1.20E-05	7.46E-06	No Data	No Data	No Data	2.17E-05
Cr-51	No Data	No Data	2.66E-09	1.59E-09	5.86E-10	3.53E-09	6.69E-07
Mn-54	No Data	4.57E-06	8.72E-07	No Data	1.36E-06	No Data	1.40E-05
Mn-56	No Data	1.15E-07	2.04E-08	No Data	1.46E-07	No Data	3.67E-06
Fe-55	2.75E-06	1.90E-06	4.43E-07	No Data	No Data	1.06E-06	1.09E-06
Fe-59	4.34E-06	1.02E-05	3.91E-06	No Data	No Data	2.85E-06	3.40E-05
Co-58	No Data	7.45E-07	1.67E-06	No Data	No Data	No Data	1.51E-05
Co-60	No Data	2.14E-06	4.72E-06	No Data	No Data	No Data	4.02E-05
Ni-63	1.30E-04	9.01E-06	4.36E-06	No Data	No Data	No Data	1.88E-06
Ni-65	5.28E-07	6.86E-08	3.13E-08	No Data	No Data	No Data	1.74E-06
Cu-64	No Data	8.33E-08	3.91E-08	No Data	2.10E-07	No Data	7.10E-06
Zn-65	4.84E-06	1.54E-05	6.96E-06	No Data	1.03E-05	No Data	9.70E-06
Zn-69	1.03E-08	1.97E-08	1.37E-09	No Data	1.28E-08	No Data	2.96E-09
Br-83	No Data	No Data	4.02E-08	No Data	No Data	No Data	5.79E-08
Br-84	No Data	No Data	5.21E-08	No Data	No Data	No Data	4.09E-13
Br-85	No Data	No Data	2.14E-09	No Data	No Data	No Data	No Data
Rb-86	No Data	2.11E-05	9.83E-06	No Data	No Data	No Data	4.16E-06
Rb-88	No Data	6.05E-08	3.21E-08	No Data	No Data	No Data	8.36E-19
Rb-89	No Data	4.01E-08	2.82E-08	No Data	No Data	No Data	2.33E-21
Sr-89	3.08E-04	No Data	8.84E-06	No Data	No Data	No Data	4.94E-05
Sr-90	7.58E-03	No Data	1.86E-03	No Data	No Data	No Data	2.19E-04
Sr-91	5.67E-06	No Data	2.29E-07	No Data	No Data	No Data	2.70E-05

All values are in (mrem/pCi ingested). They are obtained from Reference 3 (Table E-11), except as follows: Reference 2 (Table A-3) for Rh-105, Sb-124, and Sb-125.

Table 2-7 (contd). Adult Ingestion Dose Factors

Nuclide	Bone	Liver	T.Body	Thyroid	Kidney	Lung	GI-LLI
Sr-92	2.15E-06	No Data	9.30E-08	No Data	No Data	No Data	4.26E-05
Y-90	9.62E-09	No Data	2.58E-10	No Data	No Data	No Data	1.02E-04
Y-91m	9.09E-11	No Data	3.52E-12	No Data	No Data	No Data	2.67E-10
Y-91	1.41E-07	No Data	3.77E-09	No Data	No Data	No Data	7.76E-05
Y-92	8.45E-10	No Data	2.47E-11	No Data	No Data	No Data	1.48E-05
Y-93	2.68E-09	No Data	7.40E-11	No Data	No Data	No Data	8.50E-05
Zr-95	3.04E-08	9.75E-09	6.60E-09	No Data	1.53E-08	No Data	3.09E-05
Zr-97	1.68E-09	3.39E-10	1.55E-10	No Data	5.12E-10	No Data	1.05E-04
Nb-95	6.22E-09	3.46E-09	1.86E-09	No Data	3.42E-09	No Data	2.10E-05
Mo-99	No Data	4.31E-06	8.20E-07	No Data	9.76E-06	No Data	9.99E-06
Tc-99m	2.47E-10	6.98E-10	8.89E-09	No Data	1.06E-08	3.42E-10	4.13E-07
Tc-101	2.54E-10	3.66E-10	3.59E-09	No Data	6.59E-09	1.87E-10	1.10E-21
Ru-103	1.85E-07	No Data	7.97E-08	No Data	7.06E-07	No Data	2.16E-05
Ru-105	1.54E-08	No Data	6.08E-09	No Data	1.99E-07	No Data	9.42E-06
Ru-106	2.75E-06	No Data	3.48E-07	No Data	5.31E-06	No Data	1.78E-04
Rh-105	1.22E-07	8.86E-08	5.83E-08	No Data	3.76E-07	No Data	1.41E-05
Ag-110m	1.60E-07	1.48E-07	8.79E-08	No Data	2.91E-07	No Data	6.04E-05
Sb-124	2.81E-06	5.30E-08	1.11E-06	6.79E-09	No Data	2.18E-06	7.95E-05
Sb-125	2.23E-06	2.40E-08	4.48E-07	1.98E-09	No Data	2.33E-04	1.97E-05
Te-125m	2.68E-06	9.71E-07	3.59E-07	8.06E-07	1.09E-05	No Data	1.07E-05
Te-127m	6.77E-06	2.42E-06	8.25E-07	1.73E-06	2.75E-05	No Data	2.27E-05
Te-127	1.10E-07	3.95E-08	2.38E-08	8.15E-08	4.48E-07	No Data	8.68E-06
Te-129m	1.15E-05	4.29E-06	1.82E-06	3.95E-06	4.80E-05	No Data	5.79E-05
Te-129	3.14E-08	1.18E-08	7.65E-09	2.41E-08	1.32E-07	No Data	2.37E-08
Te-131m	1.73E-06	8.46E-07	7.05E-07	1.34E-06	8.57E-06	No Data	8.40E-05
Te-131	1.97E-08	8.23E-09	6.22E-09	1.62E-08	8.63E-08	No Data	2.79E-09

Table 2-7 (contd). Adult Ingestion Dose Factors

Nuclide	Bone	Liver	T.Body	Thyroid	Kidney	Lung	GI-LLI
Te-132	2.52E-06	1.63E-06	1.53E-06	1.80E-06	1.57E-05	No Data	7.71E-05
I-130	7.56E-07	2.23E-06	8.80E-07	1.89E-04	3.48E-06	No Data	1.92E-06
I-131	4.16E-06	5.95E-06	3.41E-06	1.95E-03	1.02E-05	No Data	1.57E-06
I-132	2.03E-07	5.43E-07	1.90E-07	1.90E-05	8.65E-07	No Data	1.02E-07
I-133	1.42E-06	2.47E-06	7.53E-07	3.63E-04	4.31E-06	No Data	2.22E-06
I-134	1.06E-07	2.88E-07	1.03E-07	4.99E-06	4.58E-07	No Data	2.51E-10
I-135	4.43E-07	1.16E-06	4.28E-07	7.65E-05	1.86E-06	No Data	1.31E-06
Cs-134	6.22E-05	1.48E-04	1.21E-04	No Data	4.79E-05	1.59E-05	2.59E-06
Cs-136	6.51E-06	2.57E-05	1.85E-05	No Data	1.43E-05	1.96E-06	2.92E-06
Cs-137	7.97E-05	1.09E-04	7.14E-05	No Data	3.70E-05	1.23E-05	2.11E-06
Cs-138	5.52E-08	1.09E-07	5.40E-08	No Data	8.01E-08	7.91E-09	4.65E-13
Ba-139	9.70E-08	6.91E-11	2.84E-09	No Data	6.46E-11	3.92E-11	1.72E-07
Ba-140	2.03E-05	2.55E-08	1.33E-06	No Data	8.67E-09	1.46E-08	4.18E-05
Ba-141	4.71E-08	3.56E-11	1.59E-09	No Data	3.31E-11	2.02E-11	2.22E-17
Ba-142	2.13E-08	2.19E-11	1.34E-09	No Data	1.85E-11	1.24E-11	3.00E-26
La-140	2.50E-09	1.26E-09	3.33E-10	No Data	No Data	No Data	9.25E-05
La-142	1.28E-10	5.82E-11	1.45E-11	No Data	No Data	No Data	4.25E-07
Ce-141	9.36E-09	6.33E-09	7.18E-10	No Data	2.94E-09	No Data	2.42E-05
Ce-143	1.65E-09	1.22E-06	1.35E-10	No Data	5.37E-10	No Data	4.56E-05
Ce-144	4.88E-07	2.04E-07	2.62E-08	No Data	1.21E-07	No Data	1.65E-04
Pr-143	9.20E-09	3.69E-09	4.56E-10	No Data	2.13E-09	No Data	4.03E-05
Pr-144	3.01E-11	1.25E-11	1.53E-12	No Data	7.05E-12	No Data	4.33E-18
Nd-147	6.29E-09	7.27E-09	4.35E-10	No Data	4.25E-09	No Data	3.49E-05
W-187	1.03E-07	8.61E-08	3.01E-08	No Data	No Data	No Data	2.82E-05
Np-239	1.19E-09	1.17E-10	6.45E-11	No Data	3.65E-10	No Data	2.40E-05

Table 2-8. Site-Related Ingestion Dose Factors, $A_{i\tau}$

Nuclide	Bone	Liver	T. Body	Thyroid	Kidney	Lung	GI-LLI
H-3	0.00	1.32E+00	1.32E+00	1.32E+00	1.32E+00	1.32E+00	1.32E+00
C-14	3.13E+04	6.26E+03	6.26E+03	6.26E+03	6.26E+03	6.26E+03	6.26E+03
Na-24	1.36E+02	1.36E+02	1.36E+02	1.36E+02	1.36E+02	1.36E+02	1.36E+02
P-32	1.32E+06	8.22E+04	5.11E+04	0.00	0.00	0.00	1.49E+05
Cr-51	0.00	0.00	1.27E+00	7.58E-01	2.79E-01	1.68E+00	3.19E+02
Mn-54	0.00	4.41E+03	8.42E+02	0.00	1.31E+03	0.00	1.35E+04
Mn-56	0.00	1.74E-01	3.08E-02	0.00	2.21E-01	0.00	5.55E+00
Fe-55	6.86E+02	4.74E+02	1.11E+02	0.00	0.00	2.65E+02	2.72E+02
Fe-59	1.07E+03	2.51E+03	9.61E+02	0.00	0.00	7.01E+02	8.36E+03
Co-58	0.00	9.59E+01	2.15E+02	0.00	0.00	0.00	1.94E+03
Co-60	0.00	2.78E+02	6.14E+02	0.00	0.00	0.00	5.23E+03
Ni-63	3.25E+04	2.25E+03	1.09E+03	0.00	0.00	0.00	4.70E+02
Ni-65	1.72E-01	2.23E-02	1.02E-02	0.00	0.00	0.00	5.66E-01
Cu-64	0.00	2.75E+00	1.29E+00	0.00	6.94E+00	0.00	2.35E+02
Zn-65	2.32E+04	7.37E+04	3.33E+04	0.00	4.93E+04	0.00	4.64E+04
Zn-69	7.88E-07	1.51E-06	1.05E-07	0.00	9.79E-07	0.00	2.26E-07
Br-83	0.00	0.00	3.83E-02	0.00	0.00	0.00	5.52E-02
Br-84	0.00	0.00	1.22E-12	0.00	0.00	0.00	9.61E-18
Br-85	0.00	0.00	0.00	0.00	0.00	0.00	0.00
Rb-86	0.00	9.75E+04	4.54E+04	0.00	0.00	0.00	1.92E+04
Rb-88	0.00	1.29E-22	6.82E-23	0.00	0.00	0.00	1.78E-33
Rb-89	0.00	1.61E-26	1.14E-26	0.00	0.00	0.00	0.00
Sr-89	2.49E+04	0.00	7.16E+02	0.00	0.00	0.00	4.00E+03
Sr-90	6.23E+05	0.00	1.53E+05	0.00	0.00	0.00	1.80E+04
Sr-91	7.25E+01	0.00	2.93E+00	0.00	0.00	0.00	3.45E+02
Sr-92	3.33E-01	0.00	1.44E-02	0.00	0.00	0.00	6.60E+00
Y-90	5.04E-01	0.00	1.35E-02	0.00	0.00	0.00	5.34E+03
Y-91m	1.04E-11	0.00	4.01E-13	0.00	0.00	0.00	3.04E-11
Y-91	9.77E+00	0.00	2.61E-01	0.00	0.00	0.00	5.38E+03
Y-92	4.61E-04	0.00	1.35E-05	0.00	0.00	0.00	8.07E+00
Y-93	3.19E-02	0.00	8.82E-04	0.00	0.00	0.00	1.01E+03
Zr-95	5.47E-01	1.75E-01	1.19E-01	0.00	2.75E-01	0.00	5.56E+02
Zr-97	7.40E-03	1.49E-03	6.83E-04	0.00	2.26E-03	0.00	4.62E+02
Nb-95	8.09E+00	4.50E+00	2.42E+00	0.00	4.45E+00	0.00	2.73E+04
Mo-99	0.00	1.07E+02	2.04E+01	0.00	2.43E+02	0.00	2.49E+02
Tc-99m	5.70E-04	1.61E-03	2.05E-02	0.00	2.44E-02	7.89E-04	9.53E-01

All values are in (mrem·mL)/(h·μCi). They are calculated using equation (2.14), and data from Table 2-5, Table 2-6, and Table 2-7. When "No Data" is shown for a radionuclide-organ combination in Table 2-7, $A_{i\tau}$ factors in this table are presented as zero.

Table 2-8 (contd). Site-Related Ingestion Dose Factors, $A_{i\tau}$

Nuclide	Bone	Liver	T. Body	Thyroid	Kidney	Lung	GI-LLI
Tc-101	2.71E-33	3.91E-33	3.83E-32	0.00	7.03E-32	2.00E-33	0.00
Ru-103	6.21E+00	0.00	2.68E+00	0.00	2.37E+01	0.00	7.25E+02
Ru-105	8.79E-03	0.00	3.47E-03	0.00	1.14E-01	0.00	5.38E+00
Ru-106	9.42E+01	0.00	1.19E+01	0.00	1.82E+02	0.00	6.10E+03
Rh-105	2.32E+00	1.69E+00	1.11E+00	0.00	7.15E+00	0.00	2.68E+02
Ag-110m	2.53E+00	2.34E+00	1.39E+00	0.00	4.61E+00	0.00	9.56E+02
Sb-124	1.36E+03	2.56E+01	5.37E+02	3.28E+00	0.00	1.05E+03	3.84E+04
Sb-125	1.09E+03	1.17E+01	2.19E+02	9.68E-01	0.00	1.14E+05	9.63E+03
Te-125m	2.56E+03	9.29E+02	3.43E+02	7.71E+02	1.04E+04	0.00	1.02E+04
Te-127m	6.51E+03	2.33E+03	7.93E+02	1.66E+03	2.64E+04	0.00	2.18E+04
Te-127	1.78E+01	6.40E+00	3.85E+00	1.32E+01	7.25E+01	0.00	1.41E+03
Te-129m	1.09E+04	4.07E+03	1.73E+03	3.74E+03	4.55E+04	0.00	5.49E+04
Te-129	1.78E-05	6.68E-06	4.33E-06	1.36E-05	7.47E-05	0.00	1.34E-05
Te-131m	9.57E+02	4.68E+02	3.90E+02	7.42E+02	4.74E+03	0.00	4.65E+04
Te-131	8.64E-17	3.61E-17	2.73E-17	7.10E-17	3.78E-16	0.00	1.22E-17
Te-132	1.97E+03	1.27E+03	1.19E+03	1.41E+03	1.23E+04	0.00	6.02E+04
I-130	7.60E+00	2.24E+01	8.85E+00	1.90E+03	3.50E+01	0.00	1.93E+01
I-131	1.73E+02	2.48E+02	1.42E+02	8.13E+04	4.25E+02	0.00	6.55E+01
I-132	5.27E-03	1.41E-02	4.93E-03	4.93E-01	2.24E-02	0.00	2.65E-03
I-133	2.59E+01	4.51E+01	1.37E+01	6.62E+03	7.86E+01	0.00	4.05E+01
I-134	2.18E-08	5.94E-08	2.12E-08	1.03E-06	9.44E-08	0.00	5.17E-11
I-135	1.31E+00	3.44E+00	1.27E+00	2.27E+02	5.52E+00	0.00	3.89E+00
Cs-134	2.98E+05	7.10E+05	5.80E+05	0.00	2.30E+05	7.62E+04	1.24E+04
Cs-136	2.96E+04	1.17E+05	8.42E+04	0.00	6.51E+04	8.92E+03	1.33E+04
Cs-137	3.82E+05	5.23E+05	3.43E+05	0.00	1.78E+05	5.90E+04	1.01E+04
Cs-138	9.12E-12	1.80E-11	8.92E-12	0.00	1.32E-11	1.31E-12	7.68E-17
Ba-139	5.64E-06	4.02E-09	1.65E-07	0.00	3.76E-09	2.28E-09	1.00E-05
Ba-140	3.74E+02	4.69E-01	2.45E+01	0.00	1.60E-01	2.69E-01	7.69E+02
Ba-141	8.47E-25	6.40E-28	2.86E-26	0.00	5.95E-28	3.63E-28	3.99E-34
Ba-142	0.00	0.00	0.00	0.00	0.00	0.00	0.00
La-140	1.10E-01	5.56E-02	1.47E-02	0.00	0.00	0.00	4.08E+03
La-142	2.19E-07	9.96E-08	2.48E-08	0.00	0.00	0.00	7.27E-04
Ce-141	1.15E-01	7.79E-02	8.84E-03	0.00	3.62E-02	0.00	2.98E+02
Ce-143	8.65E-03	6.39E+00	7.08E-04	0.00	2.81E-03	0.00	2.39E+02
Ce-144	6.22E+00	2.60E+00	3.34E-01	0.00	1.54E+00	0.00	2.10E+03
Pr-143	6.10E-01	2.44E-01	3.02E-02	0.00	1.41E-01	0.00	2.67E+03
Pr-144	1.48E-28	6.14E-29	7.51E-30	0.00	3.46E-29	0.00	2.13E-35
Nd-147	4.11E-01	4.75E-01	2.84E-02	0.00	2.78E-01	0.00	2.28E+03
W-187	1.47E+02	1.23E+02	4.31E+01	0.00	0.00	0.00	4.04E+04
Np-239	2.81E-02	2.76E-03	1.52E-03	0.00	8.62E-03	0.00	5.67E+02

2.5 LIQUID EFFLUENT DOSE PROJECTIONS

2.5.1 Thirty-One Day Dose Projections

In order to meet the requirements for operation of the LIQUID RADWASTE TREATMENT SYSTEM (see Section 2.1.4), dose projections must be made at least once each 31 days; this applies during periods in which a discharge to UNRESTRICTED AREAS of liquid effluents containing radioactive materials occurs or is expected.

Projected 31-day doses to individuals due to liquid effluents may be determined as follows:

$$D_{\tau p} = \left(\frac{D_{\tau c}}{t}\right) \times 31 + D_{\tau a} \qquad (2.17)$$

where:

$D_{\tau p}$ = the projected dose to the total body or organ τ, for the next 31 days of liquid releases.

$D_{\tau c}$ = the cumulative dose to the total body or organ τ, for liquid releases that have occurred in the elapsed portion of the current quarter, plus the release under consideration.

t = the number of whole or partial days elapsed into the current quarter, including the time to the end of the release under consideration (even if the release continues into the next quarter).

$D_{\tau a}$ = the anticipated dose contribution to the total body or any organ τ, due to any planned activities during the next 31-day period, if those activities will result in liquid releases that are in addition to routine liquid effluents. If only routine liquid effluents are anticipated, $D_{\tau a}$ may be set to zero.

2.5.2 Dose Projections for Specific Releases

Dose projections may be performed for a particular release by performing a pre-release dose calculation assuming that the planned release will proceed as anticipated. For individual dose projections due to liquid releases, follow the methodology of Section 2.4, using sample analysis results for the source to be released, and parameter values expected to exist during the release period.

2.6 DEFINITIONS OF LIQUID EFFLUENT TERMS

The following symbolic terms are used in the presentation of liquid effluent calculations in the sub-sections above.

Term	Definition	Section of Initial Use
A_p =	the adjustment factor used in calculating the effluent monitor setpoint for liquid release pathway p: the ratio of the assured dilution to the required dilution [unitless].	2.3.2.2
ADF =	the assured dilution factor for a planned release [unitless].	2.3.2.2
AF_p =	the dilution allocation factor for liquid release pathway p [unitless].	2.3.2.2
$A_{i\tau}$ =	the site-related adult ingestion dose commitment factor, for the total body or for any organ τ, due to identified radionuclide i [(mrem·mL)/(h·μCi)]. The values of $A_{i\tau}$ are listed in Table 2-8.	2.4.1
B_{iv} =	the crop to soil concentration factor applicable to radionuclide i, [(pCi/kg garden vegetation)/(pCi/kg soil)].	2.4.3
BF_i =	the bioaccumulation factor for radionuclide i for freshwater fish [(pCi/kg)/(pCi/L)]. Values are listed in Table 2-6.	2.4.2
c =	the setpoint of the radioactivity monitor measuring the concentration of radioactivity in the effluent line, prior to dilution and subsequent release [μCi/mL].	2.3.2.1
c_p =	the calculated effluent radioactivity monitor setpoint for liquid release pathway p [μCi/mL].	2.3.2.2
C_a =	the gross concentration of alpha emitters in the liquid waste as measured in the applicable composite sample [μCi/mL].	2.3.2.2

Term	Definition	Section of Initial Use
C_{ECL} =	the Effluent Concentration Limit stated in 10 CFR 20, Appendix B, Table 2, Column 2 [μCi/mL].	2.3.2.1
C_f =	the concentration of Fe-55 in the liquid waste as measured in the applicable composite sample [μCi/mL].	2.3.2.2
C_g =	the concentration of gamma emitter g in the liquid waste as measured by gamma ray spectroscopy performed on the applicable pre-release waste sample [μCi/mL].	2.3.2.2
C_i =	the measured concentration of radionuclide i in a sample of liquid effluent [μCi/mL].	2.3.2.2
C_{il} =	the average concentration of radionuclide i in undiluted liquid effluent during time period l [μCi/mL].	2.4.1
C_{ir} =	the measured concentration of radionuclide i in release pathway r that is contributing to radioactivity in the dilution stream [μCi/mL].	2.3.2.2
C_s =	the concentration of strontium radioisotope s (Sr-89 or Sr-90) in the liquid waste as measured in the applicable composite sample [μCi/mL].	2.3.2.2
C_t =	the concentration of H-3 in the liquid waste as measured in the applicable composite sample [μCi/mL].	2.3.2.2
CF_{iv} =	the concentration factor for radionuclide i in irrigated garden vegetation [(pCi/kg)/(pCi/L)].	2.4.2
D_w =	the dilution factor from the near field of the discharge structure to the potable water intake location [unitless].	2.4.2

Term	Definition	Section of Initial Use
D_τ =	the cumulative dose commitment to the total body or to any organ τ, due to radioactivity in liquid effluents released during a given time period [mrem].	2.4.1
$D_{\tau a}$ =	the anticipated dose contribution to the total body or any organ τ, due to any planned activities during the next 31-day period [mrem].	2.5.1
$D_{\tau c}$ =	the cumulative dose to the total body or organ τ, for liquid releases that have occurred in the elapsed portion of the current quarter, plus the release under consideration [mrem].	2.5.1
$D_{\tau p}$ =	the projected dose to the total body or organ τ, for the next 31 days of liquid releases [mrem].	2.5.1
$DF_{i\tau}$ =	the dose conversion factor for radionuclide i for adults, in organ τ [mrem/pCi]. Values are listed in Table 2-7.	2.4.2
ECL_i =	the liquid Effluent Concentration Limit for radionuclide i from 10 CFR Part 20, Appendix B, Table 2, Column 2 [μCi/mL].	2.3.2.2
f =	the effluent flowrate at the location of the radioactivity monitor [gpm].	2.3.2.1
f_{ap} =	the anticipated actual discharge flowrate for a planned release from liquid release pathway p [gpm].	2.3.2.2
f_I =	the fraction of the year that garden vegetation is irrigated [unitless].	2.4.3
f_{mp} =	the maximum permissible effluent discharge flowrate for release pathway p [gpm].	2.3.2.2

Term	Definition	Section of Initial Use
f_r =	the effluent discharge flowrate of release pathway r [gpm].	2.3.2.2
f_t =	the average undiluted liquid waste flowrate actually observed during the period of a liquid release [gpm].	2.4.1
F =	the dilution stream flowrate which can be assured prior to the release point to the UNRESTRICTED AREA [gpm].	2.3.2.1
F_d =	the entire assured dilution flowrate for the plant site during the release period [gpm].	2.3.2.2
F_{dp} =	the dilution flowrate allocated to release pathway p [gpm].	2.3.2.2
F_l =	the near-field average dilution factor in the receiving water of the UNRESTRICTED AREA [unitless].	2.4.1
F_t =	the average dilution stream flowrate actually observed during the period of a liquid release [gpm].	2.4.1
I =	the average irrigation rate during the growing season [$L/(m^2 \cdot h)$].	2.4.3
L_v =	the water content of leafy garden vegetation edible parts [L/kg].	2.4.3
M =	the additional river dilution factor from the near field of the discharge structure for the plant site to the point of irrigation water usage [unitless].	2.4.3
P =	the effective surface density of soil [kg/m^2].	2.4.3

Term	Definition	Section of Initial Use
r =	the fraction of irrigation-deposited activity retained on the edible portions of leafy garden vegetation.	2.4.3
RDF =	the required dilution factor: the minimum ratio by which liquid effluent must be diluted before reaching the UNRESTRICTED AREA, in order to ensure that the limits of Section 2.1.2 are not exceeded [unitless].	2.3.2.2
RDF_{γ} =	the RDF for a liquid release due only to its concentration of gamma-emitting radionuclides [unitless].	2.3.2.2
$RDF_{n\gamma}$ =	the RDF for a liquid release due only to its concentration of non-gamma-emitting radionuclides [unitless].	2.3.2.2
SF =	the safety factor selected to compensate for statistical fluctuations and errors of measurement [unitless].	2.3.2.2
t =	the number of whole or partial days elapsed into the current quarter, including the time to the end of the release under consideration.	2.5.1
t_b =	the period of long-term buildup of activity in soil [h].	2.4.3
t_e =	the period of leafy garden vegetation exposure during the growing season [h].	2.4.3
t_f =	the transit time from release to receptor for fish consumption [h].	2.4.2
t_h =	the time between harvest of garden vegetation and human consumption [h].	2.4.3
t_w =	the transit time from release to receptor for potable water consumption [h].	2.4.2

Term	Definition	Section of Initial Use
TF =	the tolerance factor selected to allow flexibility in the establishment of a practical monitor setpoint which could accommodate effluent releases at concentrations higher than the ECL values stated in 10 CFR 20, Appendix B, Table 2, Column 2 [unitless]; the tolerance factor must not exceed a value of 10.	3.3.2.2
U_f =	the adult rate of fish consumption [kg/y].	2.4.2
U_v =	the adult consumption rate for irrigated garden vegetation [kg/y].	2.4.2
U_w =	the adult drinking water consumption rate applicable to the plant site [L/y].	2.4.2
Y_v =	the areal density (agricultural productivity) of leafy garden vegetation [kg/m^2].	2.4.3
Z =	the applicable dilution factor for the receiving water body, in the near field of the discharge structure, during the period of radioactivity release [unitless].	2.4.1
Δt_l =	the length of time period l, over which C_{il} and F_l are averaged for liquid releases [h].	2.4.1
λ_{Ei} =	the effective removal rate for activity deposited on crop leaves [h^{-1}].	2.4.3
λ_i =	the decay constant for radionuclide i [h^{-1}].	2.4.2
λ_w =	the rate constant for removal of activity from plant leaves by weathering [h^{-1}].	2.4.3

CHAPTER 3
GASEOUS EFFLUENTS

3.1 LIMITS OF OPERATION

The following Limits of Operation implement requirements established by Technical Specifications Section 5.0. Terms printed in all capital letters are defined in Chapter 10.

3.1.1 Gaseous Effluent Monitoring Instrumentation Control

In accordance with Technical Specification 5.5.4.a, the radioactive gaseous effluent monitoring instrumentation channels shown in Table 3-1 shall be OPERABLE with their alarm/trip setpoints set to ensure that the limits of Section 3.1.2.a are not exceeded. The alarm/trip setpoints of these channels shall be determined in accordance with Section 3.3.

3.1.1.1 Applicability

These limits apply as shown in Table 3-1.

3.1.1.2 Actions

With a radioactive gaseous effluent monitoring instrumentation channel alarm/trip setpoint less conservative than required by the above control, immediately suspend the release of radioactive gaseous effluents monitored by the affected channel, declare the channel inoperable, or restore the setpoint to a value that will ensure that the limits of Section 3.1.2.a are met.

With less than the minimum number of radioactive gaseous effluent monitoring instrumentation channels OPERABLE, take the ACTION shown in Table 3-1. Restore the inoperable instrumentation to operable status within 30 days, or if unsuccessful, explain in the next Radioactive Effluent Release Report, per Technical Specification 5.6.3, why this inoperability was not corrected in a timely manner.

This control does not affect shutdown requirements or MODE changes.

3.1.1.3 Surveillance Requirements

Each radioactive gaseous effluent monitoring instrumentation channel shall be demonstrated OPERABLE by performance of the CHANNEL CHECK, SOURCE CHECK, CHANNEL

CALIBRATION and CHANNEL OPERATIONAL TEST operations at the frequencies shown in Table 3-2.

3.1.1.4 Basis

The radioactive gaseous effluent instrumentation is provided to monitor and control, as applicable, the releases of radioactive materials in gaseous effluents during actual or potential releases of gaseous effluents. The Alarm/Trip Setpoints for these instruments shall be calculated and adjusted in accordance with the methodology and parameters in Section 3.3 to ensure that the alarm/trip will occur prior to exceeding the limits of Section 3.1.2.a. The OPERABILITY and use of this instrumentation is consistent with the requirements of General Design Criteria 60, 63, and 64 of Appendix A to 10 CFR Part 50.

Table 3-1. Radioactive Gaseous Effluent Monitoring Instrumentation

Instrument	OPERABILITY Requirements		
	Minimum Channels OPERABLE	Applicability	ACTION
1. GASEOUS RADWASTE TREATMENT SYSTEM (Common)			
a. Noble Gas Activity Monitor, with Alarm and Automatic Termination of Release (ARE-0014)	1	During releases[a]	45
b. Effluent System Flowrate Measuring Device (AFT-0014)	1	During releases[a]	46
2. Turbine Building Vent (Each Unit)			
a. Noble Gas Activity Monitor (RE-12839C)	1	During releases[a]	47
b. Iodine and Particulate Samplers (RE-12839A & B)	1	During releases[a]	51
c. Flowrate Monitor (FT-12839 or FIS-12862)[b]	1	During releases[a]	46
d. Sampler Flowrate Monitor (FI-13211)	1	During releases[a]	46
3. Plant Vent (Each Unit)			
a. Noble Gas Activity Monitor (RE-12442C or RE-12444C)	1	At all times	47,48
b. Iodine Sampler/Monitor (RE-12442B or RE-12444B)	1	At all times	51
c. Particulate Sampler/Monitor (RE-12442A or RE-12444A)	1	At all times	51
d. Flowrate Monitor (FT-12442 or 12835)	1	At all times	46
e. Sampler Flowrate Monitor (FI-12442 or FI-12444)	1	At all times	46

a. "During releases" means "During radioactive releases via this pathway."

b. During emergency filtration.

Table 3-1 (contd). Notation for Table 3-1 – ACTION Statements

ACTION 45 – With the number of channels OPERABLE less than required by the Minimum Channels OPERABLE requirement, the contents of the tank(s) may be released to the environment for up to 14 days provided that prior to initiating the release:

a. At least two independent samples of the tank's contents are analyzed, and

b. At least two technically qualified members of the Facility Staff independently verify the discharge line valving, and verify the release rate calculations.

Otherwise, suspend release of radioactive effluents via this pathway.

ACTION 46 – With the number of channels OPERABLE less than required by the Minimum Channels OPERABLE requirement, effluent releases via this pathway may continue provided the flowrate is estimated at least once per 4 hours.

ACTION 47 – With the number of channels OPERABLE less than required by the Minimum Channels OPERABLE requirement, effluent releases via this pathway may continue provided grab samples are taken at least once per 12 hours and these samples are analyzed for radioactivity within 24 hours.

ACTION 48 – With the number of channels OPERABLE less than required by the Minimum Channels OPERABLE requirement, immediately suspend containment purging of radioactive effluents via this pathway.

ACTION 49 – (Not Used)

ACTION 50 – (Not Used)

ACTION 51 – With the number of channels OPERABLE less than required by the Minimum Channels OPERABLE requirement, effluent releases via the affected pathway may continue provided samples are continuously collected with auxiliary sampling equipment.

Table 3-2. Radioactive Gaseous Effluent Monitoring Instrumentation Surveillance Requirements

Instrument	Surveillance Requirements				
	CHANNEL CHECK	SOURCE CHECK	CHANNEL CALIBRA-TION	CHANNEL OPERA-TIONAL TEST	MODES[c]
1. GASEOUS RADWASTE TREATMENT SYSTEM (Common)					
a. Noble Gas Activity Monitor, with Alarm and Automatic Termination of Release (ARE-0014)	P	P	R[b]	Q[a(1)]	During Release
b. Effluent System Flowrate Measuring Device (AFT-0014)	P	NA	R	NA	During Release
2. Turbine Building Vent (Each Unit)					
a. Noble Gas Activity Monitor (RE-12839C)	D	M	R[b]	Q[a(2)]	During Release
b. Iodine and Particulate Samplers (RE-12839A&B)	W[d]	NA	NA	NA	During Release
c. Flowrate Monitor (FT-12839 or FIS-12862)	D	NA	R	NA	During Release
d. Sampler Flowrate Monitor (FI-13211)	D	NA	R	Q	During Release
3. Plant Vent (Each Unit)					
a. Noble Gas Activity Monitor (RE-12442C or RE-12444C)	D	M	R[b]	Q[a(2)]	All
b. Particulate and Iodine Monitors (RE-12442A&B)	W[d]	NA	R	Q[a(2)]	All
c. Particulate and Iodine Samplers (RE-12444A&B)	W[d]	NA	NA	NA	All
d. Flowrate Monitor (FT-12442 or 12835)	D	NA	R	NA	All
e. Sampler Flowrate Monitor (FI-12442 or FI-12444)	D	NA	R	Q	All

Table 3-2 (contd). Notation for Table 3-2

a. In addition to the basic functions of a CHANNEL OPERATIONAL TEST (Section 10.2):

(1) The CHANNEL OPERATIONAL TEST shall also demonstrate that automatic isolation of this pathway and control room annunciation occurs (for item a. below only); and control room CRT indication occurs (if any of the following conditions exist):

(a) Instrument indicates measured levels above the alarm/trip setpoint;

(b) Instrument indicates an "Equipment Trouble" alarm;

(c) Instrument indicates a "Low" alarm; or

(d) Instrument indicates channel "Deactivated".

(2) The CHANNEL OPERATIONAL TEST shall also demonstrate that control room annunciation occurs (for item a. below only); and that control room CRT indication occurs (if any of the following conditions exist):

(a) Instrument indicates measured levels above the alarm/trip setpoint;

(b) Instrument indicates an "Equipment Trouble" alarm;

(c) Instrument indicates a "Low" alarm; or

(d) Instrument indicates channel "Deactivated".

b. The initial CHANNEL CALIBRATION shall be performed using one or more of the reference standards certified by the National Institute of Standards and Technology, or using standards that have been obtained from suppliers that participate in measurement assurance activities with NIST. These standards shall permit calibrating the system over its intended range of energy and measurement range. For any subsequent CHANNEL CALIBRATION, sources that have been related to the initial calibration shall be used.

c. MODES in which surveillance is required. "All" means "At all times." "During release" means "During radioactive release via this pathway."

d. The channel check shall consist of visually verifying that the collection device (i.e., particulate filter or charcoal cartridge, etc.) is in place for sampling.

3.1.2 Gaseous Effluent Dose Rate Control

In accordance with Technical Specifications 5.5.4.c and 5.5.4.g, the licensee shall conduct operations so that the dose rates due to radioactive materials released in gaseous effluents from the site to areas at and beyond the SITE BOUNDARY are limited as follows:

a. For noble gases: Less than or equal to a dose rate of 500 mrem/y to the total body and less than or equal to a dose rate of 3000 mrem/y to the skin, and

b. For Iodine-131, Iodine-133, tritium, and for all radionuclides in particulate form with half-lives greater than 8 days: Less than or equal to a dose rate of 1500 mrem/y to any organ.

3.1.2.1 Applicability

This limit applies at all times.

3.1.2.2 Actions

With a dose rate due to radioactive material released in gaseous effluents exceeding the limit stated in Section 3.1.2, immediately decrease the release rate to within the stated limit.

These limits do not affect shutdown requirements or MODE changes.

3.1.2.3 Surveillance Requirements

The dose rates due to radioactive materials in areas at or beyond the SITE BOUNDARY due to releases of gaseous effluents shall be determined to be within the above limits, in accordance with the methods and procedures in Section 3.4.1, by obtaining representative samples and performing analyses in accordance with the sampling and analysis program specified in Table 3-3.

3.1.2.4 Basis

This control is provided to ensure that gaseous effluent dose rates will be maintained within the limits that historically have provided reasonable assurance that radioactive material discharged in gaseous effluents will not result in a dose to a MEMBER OF THE PUBLIC in an UNRESTRICTED AREA, either within or outside the SITE BOUNDARY, exceeding the limits specified in Appendix I of 10 CFR Part 50, while allowing operational flexibility for effluent releases. For MEMBERS

OF THE PUBLIC who may at times be within the SITE BOUNDARY, the occupancy of the MEMBER OF THE PUBLIC will be sufficiently low to compensate for any increase in the atmospheric diffusion factor above that for the SITE BOUNDARY.

The dose rate limit for Iodine-131, Iodine-133, tritium, and radionuclides in particulate form with half-lives greater than 8 days specifically applies to dose rates to a child via the inhalation pathway.

This control applies to the release of gaseous effluents from all reactors at the site.

Table 3-3. Radioactive Gaseous Waste Sampling and Analysis Program

Gaseous Release Type	Sampling and Analysis Requirements[a]			
	Sampling FREQUENCY	Minimum Analysis FREQUENCY	Type of Activity Analysis	MINIMUM DETECTABLE CONCENTRATION (MDC) (μCi/mL)
Waste Gas Decay Tank (Common)	P Each Tank Grab Sample	P Each Tank	Noble Gas PRINCIPAL GAMMA EMITTERS	1 E-4
Containment Purge 24" or 14" (Each Unit)	P[c] Each Purge Grab Sample	P[c] Each Purge M	Noble Gas PRINCIPAL GAMMA EMITTERS H-3 (Oxide)	1 E-4 1 E-6
Plant Vent (Each Unit)	M[c,d,f] Grab Sample	M[c]	Noble Gas PRINCIPAL GAMMA EMITTERS H-3 (Oxide)	1 E-4 1 E-6
Condenser Air Ejector & Steam Packing Exhaust (Each Unit)[b]	M Grab Sample	M	Noble Gas PRINCIPAL GAMMA EMITTERS H-3 (Oxide)	1 E-4 1 E-6
Plant Vent, Condenser Air Ejector & Steam Packing Exhaust (Each Unit)[b]	CONTINUOUS[g]	W[e] Charcoal or Silver Zeolite Sample	I-131	1 E-12
	CONTINUOUS[g]	W[e] Particulate Sample	Particulate PRINCIPAL GAMMA EMITTERS	1 E-11
	CONTINUOUS[g]	M COMPOSITE Particulate Sample	Gross Alpha	1 E-11
	CONTINUOUS[g]	Q COMPOSITE Particulate Sample	Sr-89, Sr-90	1 E-11

Table 3-3 (contd). Notation for Table 3-3

a. Terms printed in all capital letters are defined in Chapter 10.

b. The turbine building vent is the release point for the condenser air ejector and steam packing exhaust. All sampling and analyses may be omitted for this vent, provided the absence of a primary to secondary leak has been demonstrated, that is, if the gamma activity in the secondary water does not exceed background by more than 20%.

c. Sampling and analysis shall also be performed following shutdown, startup, or a THERMAL POWER change exceeding 15% of the RATED THERMAL POWER within a one-hour period. This requirement does not apply if (1) analysis shows that the DOSE EQUIVALENT I-131 concentration in the primary coolant has not increased more than a factor of 3; and (2) the noble gas monitor shows that effluent activity has not increased more than a factor of 3.

d. Tritium grab samples shall be taken at least once per 24 hours when the refueling cavity is flooded.

e. Samples shall be changed at least once per 7 days and analyses shall be completed within 48 hours after changing (or after removal from sampler). Sampling shall also be performed at least once per 24 hours for at least 7 days following each shutdown, startup, or THERMAL POWER change exceeding 15% of RATED THERMAL POWER in one hour, and analyses shall be completed within 48 hours of changing. When samples collected for 24 hours are analyzed, the corresponding MDC may be increased by a factor of 10. This requirement does not apply if (1) analysis shows that the DOSE EQUIVALENT I-131 concentration in the primary coolant has not increased more than a factor of 3; and (2) the noble gas monitor shows that effluent activity has not increased more than a factor of 3.

f. Tritium grab samples shall be taken at least once per 7 days from the Unit 1 plant vent, whenever spent fuel is in the spent fuel pool (Unit 1 plant vent only).

g. The ratio of the sample flowrate to the sampled stream flowrate shall be known for the time period covered by each dose or dose rate calculation made in accordance with controls specified in Sections 3.1.2, 3.1.3, and 3.1.4.

3.1.3 Gaseous Effluent Air Dose Control

In accordance with Technical Specifications 5.5.4.e and 5.5.4.h, the air dose due to noble gases released in gaseous effluents, from each reactor unit, to areas at and beyond the SITE BOUNDARY shall be limited to the following:

a. During any calendar quarter: Less than or equal to 5 mrad for gamma radiation and less than or equal to 10 mrad for beta radiation, and

b. During any calendar year: Less than or equal to 10 mrad for gamma radiation and less than or equal to 20 mrad for beta radiation.

3.1.3.1 Applicability

This limit applies at all times.

3.1.3.2 Actions

With the calculated air dose from radioactive noble gases in gaseous effluents exceeding any of the above limits, prepare and submit to the Nuclear Regulatory Commission within 30 days a special report which identifies the cause(s) for exceeding the limit(s); defines the corrective actions that have been taken to reduce the releases; and defines the proposed corrective actions to be taken to assure that subsequent releases of radioactive noble gases in gaseous effluents will be in compliance with the limits of Section 3.1.3.

This control does not affect shutdown requirements or MODE changes.

3.1.3.3 Surveillance Requirements

Cumulative air dose contributions from noble gas radionuclides released in gaseous effluents from each unit to areas at and beyond the SITE BOUNDARY, for the current calendar quarter and current calendar year, shall be determined in accordance with Section 3.4.2 at least once per 31 days.

3.1.3.4 Basis

This control is provided to implement the requirements of Sections II.B, III.A and IV.A of Appendix I, 10 CFR Part 50. Section 3.1.3 implements the guides set forth in Section II.B of Appendix I. The ACTION statements in Section 3.1.3.2 provide the required operating flexibility and at the same time implement the guides set forth in Section IV.A of Appendix I, assuring that the releases of

radioactive material in gaseous effluents to UNRESTRICTED AREAS will be kept "as low as is reasonably achievable." The Surveillance requirements in Section 3.1.3.3 implement the requirements in Section III.A of Appendix I, which require that conformance with the guides of Appendix I be shown by calculational procedures based on models and data such that the actual exposure of a MEMBER OF THE PUBLIC through appropriate pathways is unlikely to be substantially underestimated. The dose calculations established in Section 3.4.2 for calculating the doses due to the actual releases of noble gases in gaseous effluents are consistent with the methodology provided in Regulatory Guide 1.109 (Reference 3), and Regulatory Guide 1.111 (Reference 5). The equations in Section 3.4.2 provided for determining the air doses at the SITE BOUNDARY are based upon the historical annual average atmospheric conditions.

3.1.4 Control on Gaseous Effluent Dose to a Member of the Public

In accordance with Technical Specifications 5.5.4.e and 5.5.4.i, the dose to a MEMBER OF THE PUBLIC from I-131, I-133, tritium, and all radionuclides in particulate form with half-lives greater than 8 days in gaseous effluents released, from each reactor unit, to areas at and beyond the SITE BOUNDARY shall be limited to the following:

a. During any calendar quarter: Less than or equal to 7.5 mrem to any organ, and

b. During any calendar year: Less than or equal to 15 mrem to any organ.

3.1.4.1 Applicability

This limit applies at all times.

3.1.4.2 Actions

With the calculated dose from the release of I-131, I-133, tritium, or radionuclides in particulate form with half-lives greater than 8 days, in gaseous effluents exceeding any of the above limits, prepare and submit to the Nuclear Regulatory Commission within 30 days a special report which identifies the cause(s) for exceeding the limit; defines the corrective actions that have been taken to reduce the releases of radioiodines and radionuclides in particulate form with half-lives greater than 8 days in gaseous effluents; and defines proposed corrective actions to assure that subsequent releases will be in compliance with the limits stated in Section 3.1.4.

This control does not affect shutdown requirements or MODE changes.

3.1.4.3 Surveillance Requirements

Cumulative organ dose contributions to a MEMBER OF THE PUBLIC from I-131, I-133, tritium, and radionuclides in particulate form with half-lives greater than 8 days released in gaseous effluents from each unit to areas at and beyond the SITE BOUNDARY, for the current calendar quarter and current calendar year, shall be determined in accordance with Section 3.4.3 at least once per 31 days.

3.1.4.4 Basis

This control is provided to implement the requirements of Section II.C, III.A and IV.A of Appendix I, 10 CFR Part 50. The limits stated in Section 3.1.4 are the guides set forth in Section II.C of Appendix I. The ACTION statements in Section 3.1.4.2 provide the required operating flexibility and at the same time implement the guides set forth in Section IV.A of Appendix I to assure that the releases of radioactive materials in gaseous effluents to UNRESTRICTED AREAS will be kept "as low as is reasonably achievable." The calculational methods specified in the Surveillance Requirements of Section 3.1.4.3 implement the requirements in Section III.A of Appendix I that conformance with the guides of Appendix I be shown by calculational procedures based on models and data, such that the actual exposure of a MEMBER OF THE PUBLIC through appropriate pathways is unlikely to be substantially underestimated. The calculational methods in Section 3.4.3 for calculating the doses due to the actual releases of the subject materials are consistent with the methodology provided in Regulatory Guide 1.109 (Reference 3), and Regulatory Guide 1.111 (Reference 5). These equations provide for determining the actual doses based upon the historical annual average atmospheric conditions. The release specifications for radioiodines, radioactive materials in particulate form and radionuclides other than noble gases are dependent on the existing radionuclide pathways to man, in the areas at and beyond the SITE BOUNDARY. The pathways which were examined in the development of these calculations were: 1) individual inhalation of airborne radionuclides, 2) deposition of radionuclides onto green leafy garden vegetation with subsequent consumption by man, 3) deposition onto grassy areas where milk animals and meat producing animals graze with consumption of the milk and meat by man, and 4) deposition on the ground with subsequent exposure of man.

3.1.5 Gaseous Radwaste Treatment System Control

In accordance with Technical Specification 5.5.4.f, the GASEOUS WASTE PROCESSING SYSTEM and the VENTILATION EXHAUST TREATMENT SYSTEM shall be OPERABLE. The appropriate portions of the GASEOUS WASTE PROCESSING SYSTEM and the VENTILATION EXHAUST TREATMENT SYSTEM shall be used to reduce radioactive materials in gaseous wastes prior to their discharge when the projected doses in 31 days due to gaseous effluent releases, from each reactor unit, to areas at and beyond the SITE BOUNDARY would exceed 0.2 mrad to air from gamma radiation, 0.4 mrad to air from beta radiation, or 0.3 mrem to any organ of a MEMBER OF THE PUBLIC.

3.1.5.1 Applicability

These limits apply at all times.

3.1.5.2 Actions

With gaseous waste being discharged without treatment and in excess of the limits in Section 3.1.5, prepare and submit to the Nuclear Regulatory Commission within 30 days a special report which includes the following information:

a. Identification of any inoperable equipment or subsystem and the reason for inoperability,

b. Action(s) taken to restore the inoperable equipment to OPERABLE status, and

c. Summary description of action(s) taken to prevent a recurrence.

This control does not affect shutdown requirements or MODE changes.

3.1.5.3 Surveillance Requirements

Doses due to gaseous releases from each unit to areas at and beyond the SITE BOUNDARY shall be projected at least once per 31 days, in accordance with Section 3.5.1, when the GASEOUS WASTE PROCESSING SYSTEM or the VENTILATION EXHAUST TREATMENT SYSTEM is not being fully utilized.

The GASEOUS WASTE PROCESSING SYSTEM and the VENTILATION EXHAUST TREATMENT SYSTEM shall be demonstrated OPERABLE:

by meeting the controls of Sections 3.1.2, and either 3.1.3 (for the GASEOUS WASTE PROCESSING SYSTEM) or 3.1.4 (for the VENTILATION EXHAUST TREATMENT SYSTEM).

3.1.5.4 Basis

The OPERABILITY of the GASEOUS WASTE PROCESSING SYSTEM ensures that the system will be available for use whenever gaseous effluents require treatment prior to release to the environment. The requirement that the appropriate portions of this system be used, when specified, provides reasonable assurance that the releases of radioactive materials in gaseous effluents will be kept "as low as is reasonably achievable." This control implements the requirements of 10 CFR Part 50.36a, General Design Criterion 60 of Appendix A to 10 CFR Part 50, and the design objectives given in Section II.D of Appendix I to 10 CFR Part 50. The specified limits governing the use of appropriate portions of the system were specified as a suitable fraction of the dose design objectives set forth in Section II.B and II.C of Appendix I, 10 CFR Part 50, for gaseous effluents.

This control applies to the release of radioactive materials in gaseous effluents from each unit at the site. For units with shared radwaste treatment systems, the gaseous effluents from the shared system are proportioned among the units sharing that system.

3.1.6 Major Changes to Gaseous Radioactive Waste Treatment Systems

Licensee initiated MAJOR CHANGES TO GASEOUS RADIOACTIVE WASTE TREATMENT SYSTEMS:

a. Shall be reported to the Nuclear Regulatory Commission in the Radioactive Effluent Release Report for the period in which the change was implemented. The discussion of each change shall contain the information described in Section 7.2.2.7.

b. Shall become effective upon review and approval by the General Manager – Nuclear Plant.

3.2 GASEOUS WASTE PROCESSING SYSTEM

At Plant Vogtle, there are five potential points where radioactivity may be released to the atmosphere in gaseous discharges. These five *potential* release pathways are: the Unit 1 and Unit 2 Plant Vents; the Unit 1 and Unit 2 Turbine Building Vents; and the Dry Active Waste Processing Building Vent. However, the Turbine Building Vents are not normal release pathways unless a primary-to-secondary leak exists. The figures on the following pages give schematic diagrams of the Gaseous Waste Treatment System and the Ventilation Exhaust Treatment Systems (Reference 11).

The Unit 1 Plant Vent release pathway includes two release sources that are common to the two units: ventilation air from the Fuel Handling Building, and discharges from the GASEOUS WASTE PROCESSING SYSTEM. Otherwise, discharges from the two reactor units are separated. Reactor Containment Building ventilation releases are through the respective plant vents. The Turbine Building Vent serves as the discharge point for both the condenser air ejector and the steam packing exhauster system.

Releases from the two Turbine Building Vents, and the Dry Active Waste Processing Building Vent are considered to be ground-level releases, whereas releases from the two Plant Vents are considered mixed-mode releases. Chapter 8 discusses the calculation of atmospheric dispersion parameters using the ground-level and mixed-mode (i.e., split-wake) models. All five potential release pathways are considered to be continuous (as opposed to batch) in nature.

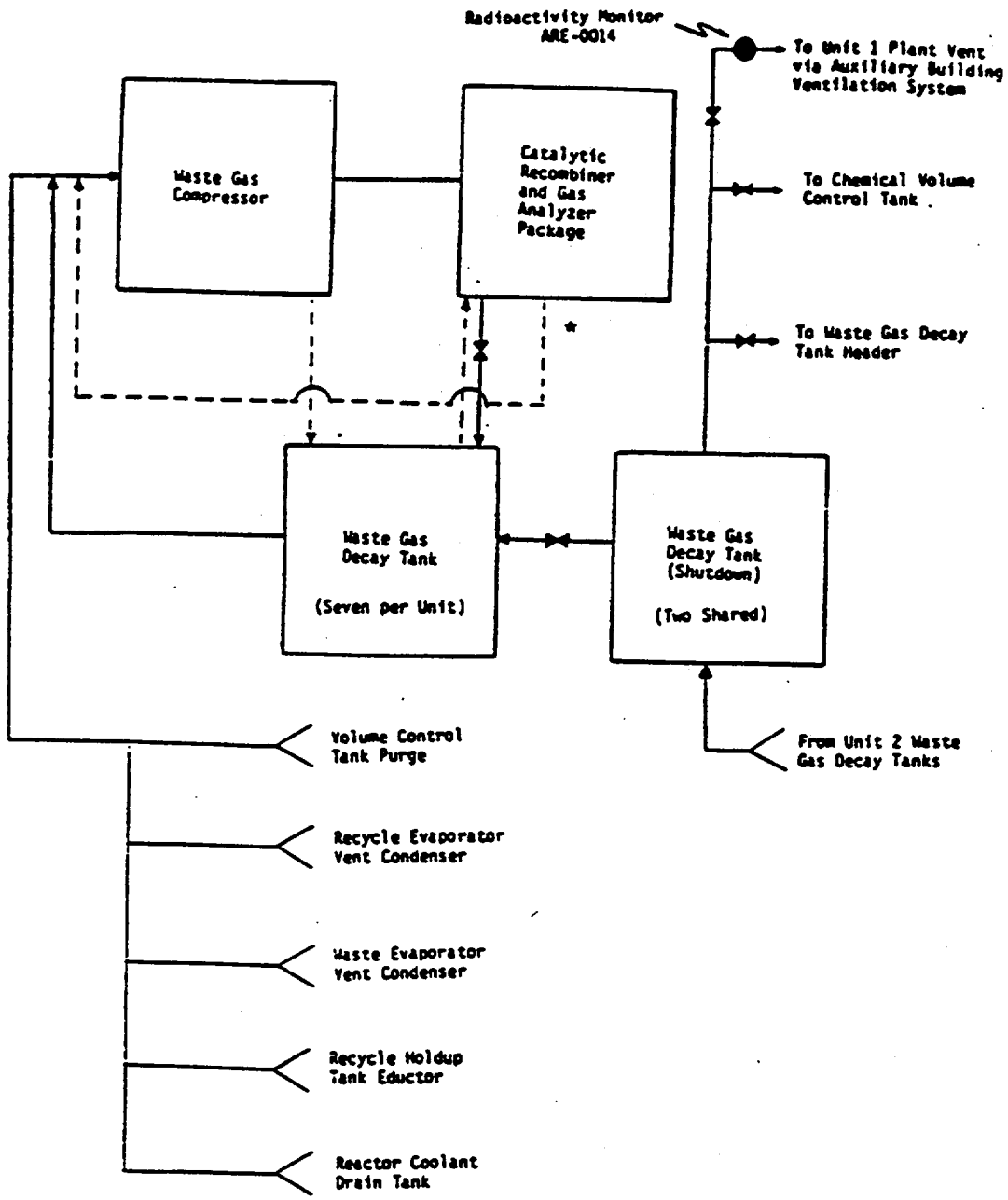

*Dotted line operational between 20 and 100 psig

NOTE: This is typical of both units. However, Unit 2 GWPS releases via Unit 1 plant vent.

Figure 3-1. Schematic Diagram of the Gaseous Radwaste Treatment System

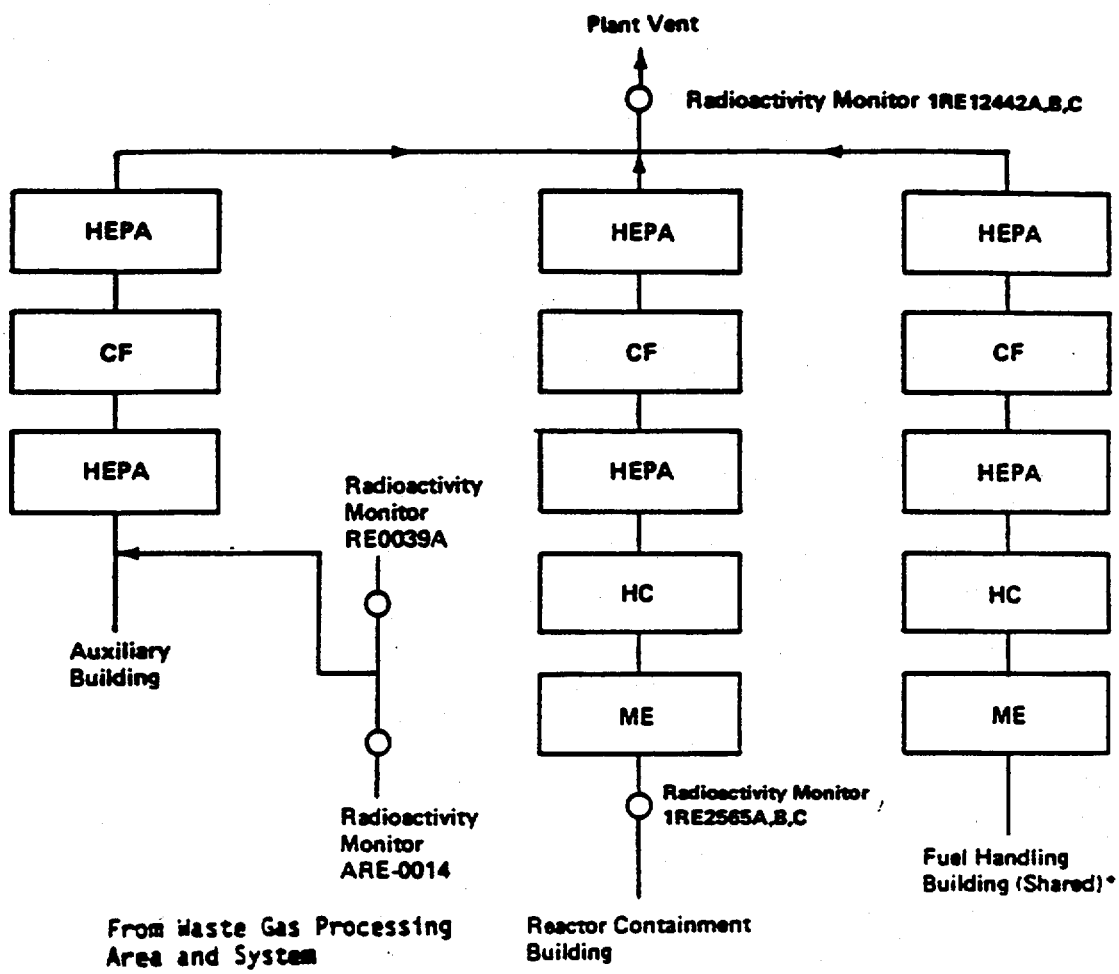

HEPA – High-Efficiency Particulate Air Filter
CF – Activated Charcoal Filter
HC – Heating Coil
ME – Moisture Eliminator

*Prior to treatment by the Fuel Handling Building Ventilation Exhaust Treatment System, Exhaust from Unit 1 Spent Fuel Pool Area is monitored by ARE2532B and ARE2533B ; exhaust from Unit 2 Spent Fuel Pool Area is monitored by ARE2532A and ARE2533A.

Figure 3-2. Schematic Diagram of the Unit 1 Plant Vent Release Pathway

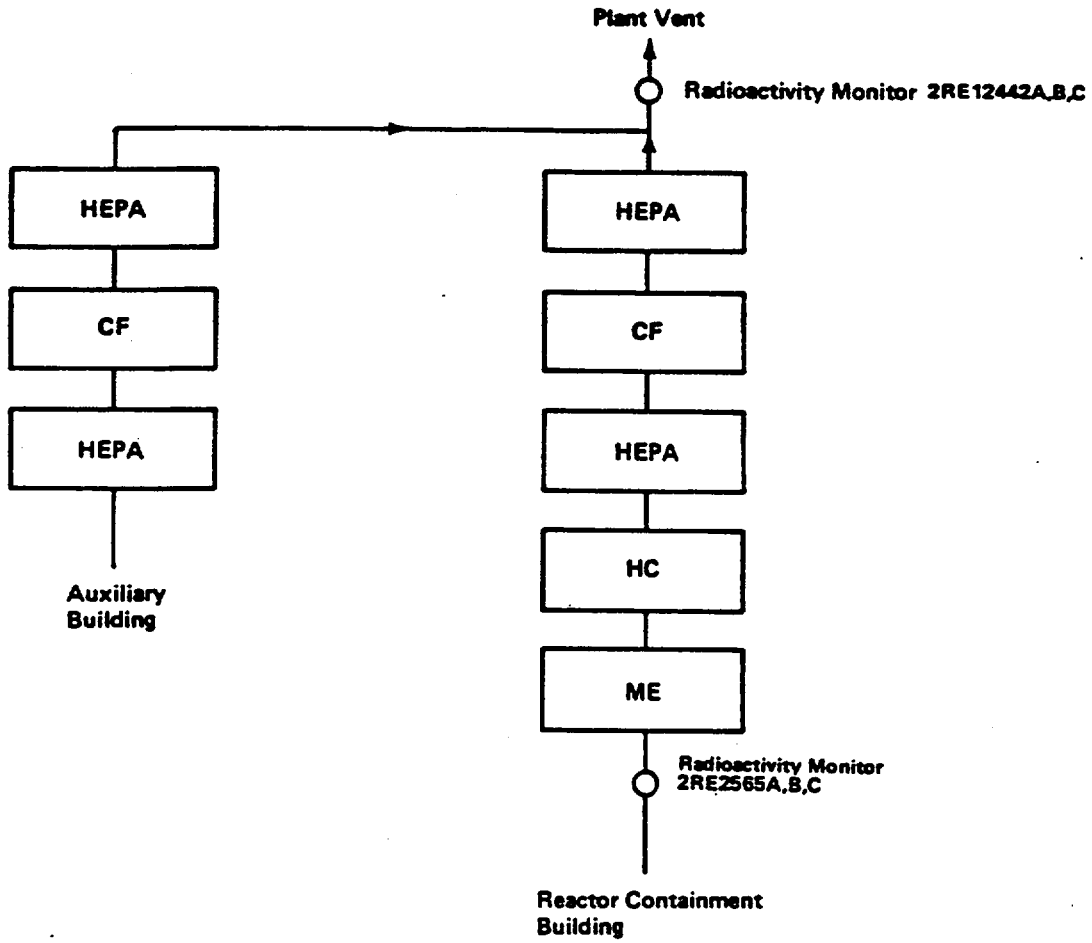

HEPA – High-Efficiency Particulate Air Filter
CF – Activated Charcoal Filter
HC – Heating Coil
ME – Moisture Eliminator

Figure 3-3. Schematic Diagram of the Unit 2 Plant Vent Release Pathway

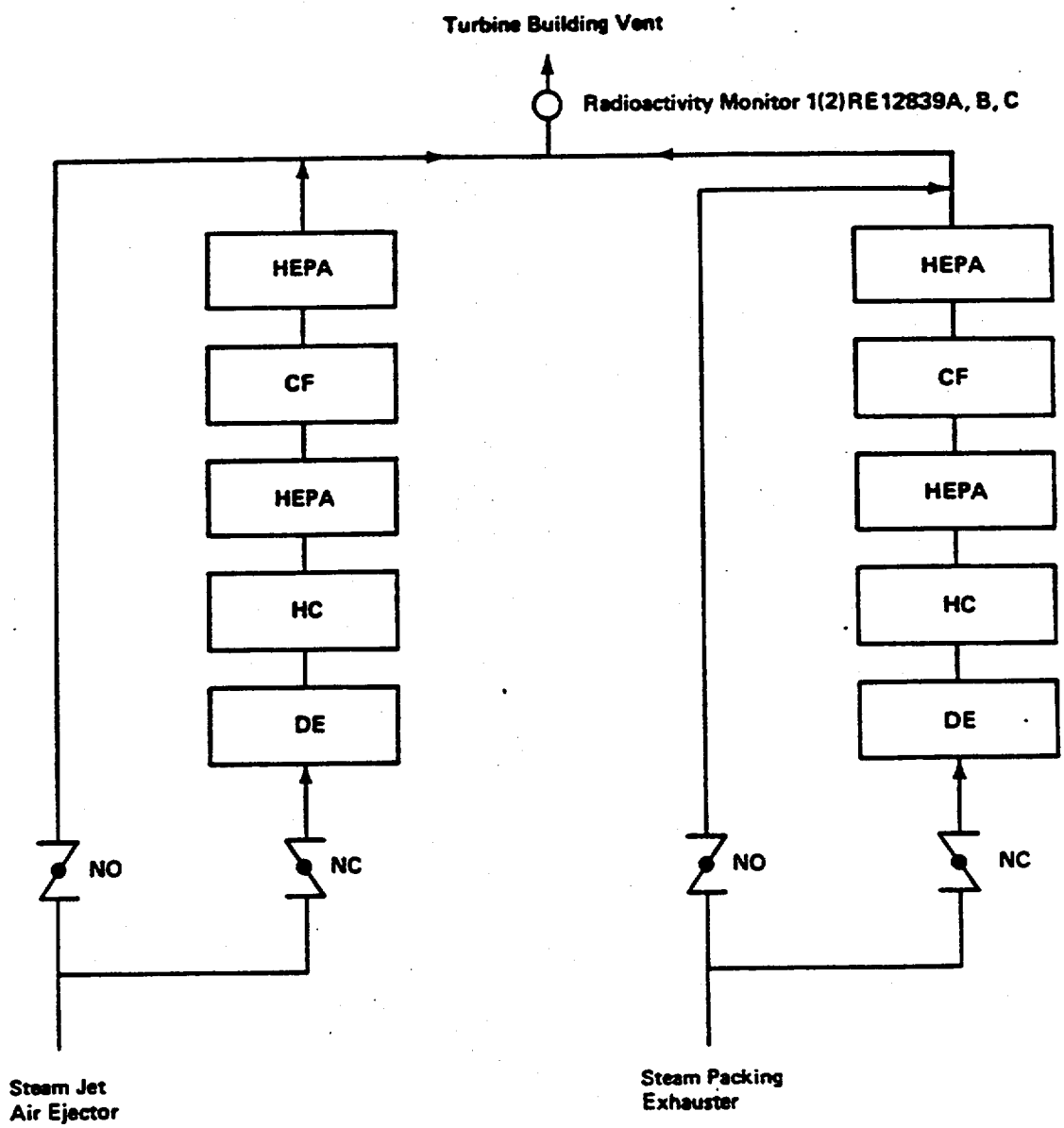

HEPA – High-Efficiency Particulate Air Filter
CF – Activated Charcoal Filter
HC – Heating Coil
DE – Demister
NO – Normally Open
NC – Normally Closed

NOTE: This is typical of both units.

Figure 3-4. Schematic Diagram of the Turbine Building Vent Release Pathway (Typical of Both Units)

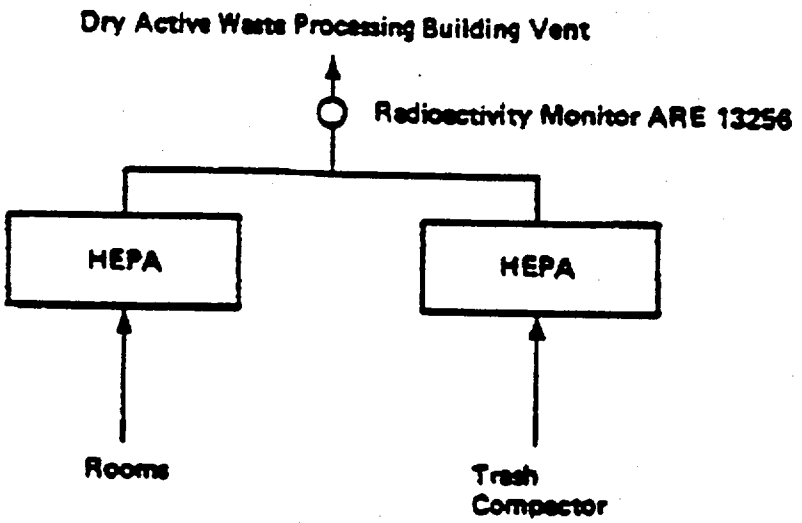

Figure 3-5. Schematic Diagram of the Dry Active Waste Processing Building Ventilation Release Pathway

3.3 GASEOUS EFFLUENT MONITOR SETPOINTS

3.3.1 General Provisions Regarding Noble Gas Monitor Setpoints

Noble gas radioactivity monitor setpoints calculated in accordance with the methodology presented in this section are intended to ensure that the limits of Section 3.1.2.a are not exceeded. They will be regarded as upper bounds for the actual high alarm setpoints. That is, a lower high alarm setpoint may be established or retained on the monitor, if desired. Intermediate level setpoints should be established at an appropriate level to give sufficient warning prior to reaching the high alarm setpoint.

If no release is planned for a given pathway, or if there is no detectable activity in the gaseous stream being evaluated for release, the setpoint should be calculated in accordance with the methods presented below, based on an assumed concentration of Kr-88 that leads to a practical setpoint. A practical setpoint in this context is one which prevents spurious alarms, and yet produces an alarm should a significant inadvertent release occur.

Section 3.1.1 establishes the requirements for gaseous effluent monitoring instrumentation, and Section 3.2 describes the VENTILATION EXHAUST TREATMENT SYSTEM and the GASEOUS WASTE PROCESSING SYSTEM. From those Sections, it can be seen that certain monitors are located on final release pathways, that is, streams that are being monitored immediately before being discharged from the plant; the setpoint methodology for these monitors is presented in Section 3.3.2. Other monitors are located on source streams, that is, streams that merge with other streams prior to passing a final monitor and being discharged; the setpoint methodology for these monitors is presented in Section 3.3.3. Table 3-4 identifies which of these setpoint methodologies applies to each monitor. Some additional monitors with special setpoint requirements are discussed in Section 3.3.5.

As established in Section 3.1.1, gaseous effluent monitor setpoints are *required* only for the noble gas monitors on certain potential release streams: the two Plant Vents, the two Turbine Building Vents, and the GASEOUS WASTE PROCESSING SYSTEM discharge. However, because of the potential significance of releases from other sources, Section 3.3 discusses setpoint methodologies for certain additional monitors, as well.

Table 3-4. Applicability of Gaseous Monitor Setpoint Methodologies

Final Release Pathways with no Monitored Source Streams

Setpoint Method: Section 3.3.2
Release Elevation: Ground-level

Unit 1 or Unit 2 Turbine Building Vent
Monitor: 1RE-12839C / 2RE-12839C
Maximum Flowrate: 900 cfm (4.25 E+05 mL/s)

Dry Active Waste Building Vent
Monitor: ARE-13256
Maximum Flowrate: 2,200 cfm (1.04 E+06 mL/s)

Final Release Pathways with One or More Monitored Source Streams

Release Elevation: Mixed-Mode

Unit 1 Plant Vent
Monitors: 1RE-12442C, 1RE-12444C
Maximum Flowrate: 187,000 cfm (8.83 E+07 mL/s)
Setpoint Method: Section 3.3.2
Release Type: CONTINUOUS

Source Stream: Unit 1 Reactor Containment Purge
Monitor: 1RE-2565C
Maximum Flowrate: release-dependent
Setpoint Method: Section 3.3.3
Release Type: BATCH

Source Stream: Gaseous Waste Treatment System
Monitor: ARE-0014
Maximum Flowrate: release-dependent
Setpoint Method: Section 3.3.3
Release Type: BATCH

Unit 2 Plant Vent
Monitors: 2RE-12442C, 2RE-12444C
Maximum Flowrate: 112,500 cfm (5.31 E+07 mL/s)
Setpoint Method: Section 3.3.2
Release Type: CONTINUOUS

Source Stream: Unit 2 Reactor Containment Purge
Monitor: 2RE-2565C
Maximum Flowrate: release-dependent
Setpoint Method: Section 3.3.3
Release Type: BATCH

$(\bar{\chi}/\bar{Q})_{vb}$ Values for Use in Setpoint Calculations

Ground-Level Releases: 2.55×10^{-6} s/m^3 [NE Sector]

Mixed-Mode Releases: 4.62×10^{-7} s/m^3 [NE Sector]

Maximum flowrate values are from Reference 11, Table 11.5.2-1 and Table 11.5.5-1.

3.3.2 Setpoint for the Final Noble Gas Monitor on Each Release Pathway

3.3.2.1 Overview of Method

Gaseous effluent radioactivity monitors are intended to alarm prior to exceeding the limits of Section 3.1.2.a. Therefore, their alarm setpoints are established to ensure compliance with the following equation:

$$c = \text{the lesser of} \begin{cases} AG \cdot SF \cdot X \cdot R_t \\ AG \cdot SF \cdot X \cdot R_k \end{cases} \qquad (3.1)$$

where:

c = the setpoint, in μCi/mL, of the radioactivity monitor measuring the concentration of radioactivity in the effluent line prior to release. The setpoint represents a concentration which, if exceeded, could result in dose rates exceeding the limits of Section 3.1.2.a at or beyond the SITE BOUNDARY.

AG = an administrative allocation factor applied to divide the release limit among all the gaseous release pathways at the site.

SF = the safety factor selected to compensate for statistical fluctuations and errors of measurement.

X = the noble gas concentration for the release under consideration.

R_t = the ratio of the dose rate limit for the total body, 500 mrem/y, to the dose rate to the total body for the conditions of the release under consideration.

R_k = the ratio of the dose rate limit for the skin, 3000 mrem/y, to the dose rate to the skin for the conditions of the release under consideration.

Equation (3.1) shows the relationships of the critical parameters that determine the setpoint. However, in order to apply the methodology presented in the equation to a mixture of noble gas radionuclides, radionuclide-specific concentrations and dose factors must be taken into account under conditions of maximum flowrate for the release point and annual average meteorology.

The basic setpoint method presented below is applicable to the radioactivity monitor nearest the point of release for the release pathway. For monitors

measuring the radioactivity in source streams that merge with other streams prior to subsequent monitoring and release, the modifications presented in Section 3.3.3 must be applied.

3.3.2.2 Setpoint Calculation Steps

Step 1: Determine the concentration, X_{iv}, of each noble gas radionuclide i in the gaseous stream v being considered for release, in accordance with the sampling and analysis requirements of Section 3.1.2. Then sum these concentrations to determine the total noble gas concentration, $\sum_i X_{iv}$.

Step 2: Determine R_t, the ratio of the dose rate limit for the total body, 500 mrem/y, to the total body dose rate due to noble gases detected in the release under consideration, as follows:

$$R_t = \frac{500}{(\overline{X}/\overline{Q})_{vb} \sum_i [K_i \cdot Q_{iv}]} \qquad (3.2)$$

where:

500 = the dose rate limit for the total body, 500 mrem/y.

$(\overline{X}/\overline{Q})_{vb}$ = the highest annual average relative concentration at the SITE BOUNDARY for the discharge point of release pathway v. Table 3-4 includes an indication of what release elevation is applicable to each release pathway; release elevation determines the appropriate value of $(\overline{X}/\overline{Q})_{vb}$.

K_i = the total-body dose factor due to gamma emissions from noble gas radionuclide i, in (mrem/y)/(μCi/m^3), from Table 3-5.

Q_{iv} = the release rate of noble gas radionuclide i from the release pathway under consideration, in μCi/s, calculated as the product of X_{iv} and f_{av}, where:

X_{iv} = the concentration of noble gas radionuclide i for the particular release, in μCi/mL.

f_{av} = the maximum anticipated flowrate for release pathway v during the period of the release under consideration, in mL/s.

Step 3: Determine R_k, the ratio of the dose rate limit for the skin, 3000 mrem/y, to the skin dose rate due to noble gases detected in the release under consideration, as follows:

$$R_k = \frac{3000}{(\overline{X/Q})_{vb} \sum_i \left[(L_i + 1.1 M_i) \cdot Q_{iv} \right]} \qquad (3.3)$$

where:

3000 = the dose rate limit for the skin, 3000 mrem/y.

L_i = the skin dose factor due to beta emissions from noble gas radionuclide i, in (mrem/y)/(μCi/m^3), from Table 3-5.

M_i = the air dose factor due to gamma emissions from noble gas radionuclide i, in (mrad/y)/(μCi/m^3), from Table 3-5.

1.1 = the factor to convert air dose in mrad to skin dose in mrem.

All other terms were defined previously.

Step 4: Determine the maximum noble gas radioactivity monitor setpoint concentration.

Based on the values determined in previous steps, the radioactivity monitor setpoint for the planned release is calculated to ensure that the limits of Section 3.1.2.a will not be exceeded. Because the radioactivity monitor responds primarily to radiation from noble gas radionuclides, the monitor setpoint c_{nv} (in μCi/mL) is based on the concentration of all noble gases in the waste stream, as follows:
where:

c_{nv} = the calculated setpoint, in μCi/mL, for the noble gas monitor serving gaseous release pathway v.

$$c_{nv} = \text{the lesser of} \begin{cases} AG_v \cdot SF \cdot \sum_i X_{iv} \cdot R_t \\ AG_v \cdot SF \cdot \sum_i X_{iv} \cdot R_k \end{cases} \quad (3.4)$$

AG_v = the administrative allocation factor for gaseous release pathway v, applied to divide the release limit among all the gaseous release pathways at the site. The allocation factor may be assigned any value between 0 and 1, under the condition that the sum of the allocation factors for all simultaneously-active final release pathways at the entire plant site does not exceed 1. Alternative methods for determination of AG_v are presented in Section 3.3.4.

SF = the safety factor selected to compensate for statistical fluctuations and errors of measurement. The value for the safety factor must be between 0 and 1. A value of 0.5 is reasonable for gaseous releases; a more precise value may be developed if desired.

X_{iv} = the measured concentration of noble gas radionuclide i in gaseous stream v, as defined in Step 1, in μCi/mL.

The values of R_t and R_k to be used in the calculation are those which were determined in Steps 2 and 3 above.

Step 5: Determine whether the release is permissible, as follows:

If $c_{nv} \geq \sum_i X_{iv}$, the release is permissible. However, if c_{nv} is within about 10 percent of $\sum_i X_{iv}$, it may be impractical to use this value of c_{nv}. This situation indicates that measured concentrations are approaching values which would cause the limits of Section 3.1.2.a to be exceeded. Therefore, steps should be taken to reduce contributing source terms of gaseous radioactive material, or to adjust the allocation of the limits among the active release points. The setpoint calculations (steps 1-4) must then be repeated with parameters that reflect the modified conditions.

If $c_{nv} < \sum_i X_{iv}$, the release may not be made as planned. Consider the alternatives discussed in the paragraph above, and calculate a new setpoint based on the results of the actions taken.

3.3.2.3 Use of the Calculated Setpoint

The setpoint calculated above is in the units μCi/mL. The monitor actually measures a count rate, subtracts a predetermined background count rate, and multiplies by a calibration factor to convert from count rate to μCi/mL.

Initial calibration by the manufacturer and Georgia Power Company of the gaseous effluent monitors specified in Section 3.1.1 utilized at least one NIST-traceable gaseous radionuclide source in the exact geometry of each production monitor. The point and gaseous sources used covered the beta particle end point energy range from 0.293 MeV to at least 1.488 MeV. The calibration factor is a function of the radionuclide mix in the gas to be released, and normally will be calculated for the monitor based on the results of the sample results from the laboratory gamma-ray spectrometer system. The mix-dependent calibration factor will be used as the gain factor in the PERMS monitor, or used to modify the calculated base monitor setpoint so that the default calibration factor in the PERMS monitor can be left unchanged.

Notwithstanding the initial calibration, monitor calibration data for conversion between count rate and concentration *may* include operational data obtained from determining the monitor response to stream concentrations measured by sample analysis.

In all cases, monitor background must be controlled so that the monitor is capable of responding to concentrations in the range of the setpoint value. Contributions to the monitor background may include any or all of the following factors: ambient background radiation, plant-related radiation levels at the monitor location (which may change between shutdown and power conditions), and internal background due to contamination of the monitor's sample chamber.

3.3.3 Setpoints for Noble Gas Monitors on Effluent Source Streams

Table 3-4 lists certain gaseous release pathways as being source streams. As may be seen in the figures of Section 3.2, these are streams that merge with other streams, prior to passing a final radioactivity monitor and being released. Unlike the final monitors, the source stream monitors measure radioactivity in effluent streams for which flow can be terminated; therefore, the source stream

monitors have control logic to terminate the source stream release at the alarm setpoint.

3.3.3.1 Setpoint of the Monitor on the Source Stream

Step 1: Determine the concentration X_{is} of each noble gas radionuclide i in source stream s (in μCi/mL) according to the results of its required sample analyses [see Section 3.1.2].

Step 2: Determine r_t, the ratio of the dose rate limit for the total body, 500 mrem/y, to the total body dose rate due to noble gases detected in the source stream under consideration. Use the X_{is} values and the maximum anticipated source stream flow rate f_{as} in equation (3.2) to determine the total body dose rate for the source stream, substituting r_t for R_t.

The SITE BOUNDARY relative dispersion value used in Steps 2 and 3 for the source stream is the same as the $(\bar{X}/\bar{Q})_{vb}$ that applies to the respective merged stream. This is because the $(\bar{X}/\bar{Q})$ value is determined by the meteorology of the plant site and the physical attributes of the release point, and is unaffected by whether or not a given source stream is operating.

Step 3: Determine r_k, the ratio of the dose rate limit for the skin, 3000 mrem/y, to the skin dose rate due to noble gases detected in the source stream under consideration. Use the X_{is} values and the maximum anticipated source stream flow rate f_{as} in equation (3.3) to determine the skin dose rate for the source stream, substituting r_k for R_k.

Step 4: Determine the maximum noble gas radioactivity monitor setpoint concentration, as follows:

$$c_{ns} = \text{the lesser of} \begin{cases} AG_s \cdot SF \cdot \sum_i X_{is} \cdot r_t \\ AG_s \cdot SF \cdot \sum_i X_{is} \cdot r_k \end{cases} \quad (3.5)$$

where:

c_{ns} = the calculated setpoint (in μCi/mL) for the noble gas monitor serving gaseous source stream s.

AG_s = the administrative allocation factor applied to gaseous source stream s. For a given final release point v, the sum of all the AG_s values for source streams contributing to the final release point must not exceed the release point's allocation factor AG_v.

X_{is} = the measured concentration of noble gas radionuclide i in gaseous source stream s, as defined in Step 1, in μCi/mL.

The values of r_t and r_k to be used in the calculation are those which were determined in Steps 2 and 3 above. The safety factor, SF, was defined previously.

Step 5: Determine whether the release is permissible, as follows:

If $c_{ns} \geq \sum_i X_{is}$, the release is permissible. However, if c_{ns} is within about 10 percent of $\sum_i X_{is}$, it may be impractical to use this value of c_{ns}. This situation indicates that measured concentrations are approaching values which would cause the limits of Section 3.1.2.a to be exceeded. Therefore, steps should be taken to reduce contributing source terms of gaseous radioactive material, or to adjust the allocation of the limits among the active release points. The setpoint calculations (steps 1-4) must then be repeated with parameters that reflect the modified conditions.

If $c_{ns} < \sum_i X_{is}$, the release may not be made as planned. Consider the alternatives discussed in the paragraph above, and calculate a new setpoint based on the results of the actions taken.

3.3.3.2 Effect on the Setpoint of the Monitor on the Merged Stream

Before beginning a release from a monitored source stream, a setpoint must be determined for the source stream monitor as presented in Section 3.3.3.1. In addition, whether or not the source stream has its own effluent monitor, the previously-determined maximum allowable setpoint for the downstream final monitor on the merged stream must be redetermined. This is accomplished by repeating the steps of Section 3.3.2, with the following modifications.

Modification 1: The new maximum anticipated flowrate of the merged stream is the sum of the old merged stream maximum flowrate, and the maximum flowrate of the source stream being considered for release.

$$(f_{av})_{new} = (f_{av})_{old} + f_{as} \tag{3.6}$$

Modification 2: The new concentration of noble gas radionuclide i in the merged stream includes both the contribution of the merged stream *without* the source stream, *and* the source stream being considered for release.

$$(X_{iv})_{new} = \frac{(f_{av})_{old} \cdot (X_{iv})_{old} + f_{as} \cdot X_{is}}{(f_{av})_{new}} \tag{3.7}$$

3.3.4 Determination of Allocation Factors, AG

When simultaneous gaseous releases are conducted, an administrative allocation factor must be applied to divide the release limit among the active gaseous release pathways. This is to assure that the dose rate limit for areas at and beyond the SITE BOUNDARY (see Section 3.1.2) will not be exceeded by simultaneous releases. The allocation factor for any pathway may be assigned any value between 0 and 1, under the following two conditions:

1. The sum of the allocation factors for all simultaneously-active *final* release paths at the plant site may not exceed 1.

2. The sum of the allocation factors for all simultaneously-active *source streams* merging into a given final release pathway may not exceed the allocation factor of that final release pathway.

Any of the following three methods may be used to assign the allocation factors to the active gaseous release pathways:

1. For ease of implementation, AG_v may be equal for all release pathways:

$$AG_v = \frac{1}{N} \tag{3.8}$$

where:

N = the number of simultaneously active gaseous release pathways.

2. AG_v for a given release pathway may be selected based on an *estimate* of the portion of the total SITE BOUNDARY dose rate (from all simultaneous releases) that is contributed by the release pathway. During periods when a given building or release pathway is not subject to gaseous radioactive releases, it may be assigned an allocation factor of zero.

3. AG_v for a given release pathway may be selected based on a *calculation* of the portion of the total SITE BOUNDARY dose rate that is contributed by the release pathway, as follows:

$$AG_v = \frac{(\overline{X/Q})_{vb} \sum_i (K_i\, Q_{iv})}{\sum_{r=1}^{N} \left[(\overline{X/Q})_{rb} \sum_i (K_i\, Q_{ir}) \right]} \tag{3.9}$$

where:

$(\overline{X}/\overline{Q})_{vb}$ = the annual average SITE BOUNDARY relative concentration applicable to the gaseous release pathway v for which the allocation factor is being determined, in s/m^3.

K_i = the total-body dose factor due to gamma emissions from noble gas radionuclide i, in $(mrem/y)/(\mu Ci/m^3)$, from Table 3-5.

Q_{iv} = the release rate of noble gas radionuclide i from release pathway v, in $\mu Ci/s$, calculated as the product of X_{iv} and f_{av}, where:

X_{iv} = the concentration of noble gas radionuclide i applicable to the gaseous release pathway v for which the allocation factor is being determined, in $\mu Ci/mL$.

f_{av} = the discharge flowrate applicable to gaseous release pathway v for which the allocation factor is being determined, in mL/s.

$(\bar{X}/\bar{Q})_{rb}$ = the annual average SITE BOUNDARY relative concentration applicable to active gaseous release pathway r, in s/m^3.

Q_{ir} = the release rate of noble gas radionuclide i applicable to active release pathway r, in μCi/s, calculated as the product of X_{ir} and f_{ar}, where:

X_{ir} = the concentration of noble gas radionuclide i applicable to active gaseous release pathway r, in μCi/mL.

f_{ar} = the discharge flowrate applicable to active gaseous release pathway r, in mL/s.

N = the number of simultaneously active gaseous release pathways (including pathway v that is of interest).

NOTE: Although equations (3.8) and (3.9) are written to illustrate the assignment of the allocation factors for final release pathways, they may also be used to assign allocation factors to the source streams that merge into a given final release pathway.

3.3.5 Setpoints for Noble Gas Monitors with Special Requirements

At present, VEGP has no noble gas monitors for which setpoint methodologies are to be presented in the ODCM, and that require methods other than those in Section 3.3.2 or Section 3.3.3.

3.3.6 Setpoints for Particulate and Iodine Monitors

In accordance with Section 5.1.1 of NRC NUREG-0133 (Reference 1), the effluent controls of Section 3.1.1 do not require that the ODCM establish setpoint calculation methods for particulate and iodine monitors. Therefore, the following is provided for information only: Initial setpoints for the particulate channels of effluent monitors RE-12442, RE-2565, and ARE-13256 were determined as described in Reference 13.

3.4 GASEOUS EFFLUENT COMPLIANCE CALCULATIONS

3.4.1 Dose Rates at and Beyond the Site Boundary

Because the dose rate limits for areas at and beyond the SITE specified in Section 3.1.2 are *site* limits applicable at any instant in time, the summations extend over all simultaneously active gaseous final release pathways at the *plant site*. Table 3-4 identifies the gaseous final release pathways at the plant site, and indicates the $(\overline{X}/\overline{Q})_{vb}$ value for each.

3.4.1.1 Dose Rates Due to Noble Gases

For the purpose of implementing the controls of Section 3.1.2.a, the dose rates due to noble gas radionuclides in areas at or beyond the SITE BOUNDARY, due to releases of gaseous effluents, shall be calculated as follows:

For total body dose rates:

$$DR_t = \sum_v \left\{ (\overline{X/Q})_{vb} \sum_i \left[K_i \, Q_{iv} \right] \right\} \tag{3.10}$$

For skin dose rates:

$$DR_k = \sum_v \left\{ (\overline{X/Q})_{vb} \sum_i \left[(L_i + 1.1 M_i) \, Q_{iv} \right] \right\} \tag{3.11}$$

where:

DR_t = the total body dose rate at the time of the release, in mrem/y.

DR_k = the skin dose rate at the time of the release, in mrem/y.

Q_{iv} = the release rate of noble gas radionuclide i, in μCi/s, equal to the product of f_{tv} and X_{iv}, where:

f_{tv} = the actual average flowrate for release pathway v during the period of the release, in mL/s.

All other terms were defined previously.

3.4.1.2 Dose Rates Due to Iodine-131, Iodine-133, Tritium, and Radionuclides in Particulate Form with Half-Lives Greater than 8 Days

For the purpose of implementing the controls of Section 3.1.2.b, the dose rates due to Iodine-131, Iodine-133, tritium, and all radionuclides in particulate form with half-lives greater than 8 days, in areas at or beyond the SITE BOUNDARY, due to releases of gaseous effluents, shall be calculated as follows:

$$DR_o = \sum_v \left\{ (\overline{X/Q})_{vb} \sum_i \left[P_{io} \, Q'_{iv} \right] \right\} \qquad (3.12)$$

where:

DR_o = the dose rate to organ o at the time of the release, in mrem/y.

P_{io} = the site-specific dose factor for radionuclide i and organ o, in (mrem/y)/(μCi/m^3). Since the dose rate limits specified in Section 3.1.2.b apply only to the child age group exposed to the inhalation pathway, the values of P_{io} may be obtained from Table 3-9, "R_{aipj} for Inhalation Pathway, Child Age Group."

Q'_{iv}= the release rate of radionuclide i from gaseous release pathway v, in μCi/s. For the purpose of implementing the controls of Section 3.1.2.b, only I-131, I-133, tritium, and all radionuclides in particulate form with half-lives greater than 8 days should be included in this calculation.

All other terms were defined previously.

3.4.2 Noble Gas Air Dose at or Beyond Site Boundary

For the purpose of implementing the controls of Section 3.1.3, air doses in areas at or beyond the SITE BOUNDARY due to releases of noble gases from each unit shall be calculated as follows (adapted from Reference 1, page 28, by including only long-term releases):

$$D_\beta = 3.17 \times 10^{-8} \sum_v \left\{ (\overline{X/Q})_{vb} \sum_i \left[N_i \cdot \tilde{Q}_{iv} \right] \right\} \quad (3.13)$$

$$D_\gamma = 3.17 \times 10^{-8} \sum_v \left\{ (\overline{X/Q})_{vb} \sum_i \left[M_i \cdot \tilde{Q}_{iv} \right] \right\} \quad (3.14)$$

where:

3.17×10^{-8} = a units conversion factor: $1\ y/(3.15 \times 10^7\ s)$.

D_β = the air dose due to beta emissions from noble gas radionuclides, in mrad.

D_γ = the air dose due to gamma emissions from noble gas radionuclides, in mrad.

N_i = the air dose factor due to beta emissions from noble gas radionuclide i (mrad/y)/(μCi/m^3), from Table 3-5.

M_i = the air dose factor due to gamma emissions from noble gas radionuclide i (mrad/y)/(μCi/m^3), from Table 3-5.

$\tilde{Q}_{iv}$ = the cumulative release of noble gas radionuclide i from release pathway v (μCi), during the period of interest.

and all other terms are as defined above.

Because the air dose limit is on a per-reactor-unit basis, the summations extend over all gaseous final release pathways for a given *unit*. For a release pathway discharging materials originating in both reactor units, the activity discharged from the release point may be apportioned to the two units in any reasonable manner, provided that all activity released via the particular shared release pathway is apportioned to one or the other unit.

The gaseous final release pathways at the plant site, and the $(\bar{X}/\bar{Q})_{vb}$ for each, are identified in Table 3-4.

Table 3-5. Dose Factors for Exposure to a Semi-Infinite Cloud of Noble Gases

Nuclide	γ - Body (K) (mrem/y) per (μCi/m^3)	β - Skin (L) (mrem/y) per (μCi/m^3)	γ - Air (M) (mrad/y) per (μCi/m^3)	β - Air (N) (mrad/y) per (μCi/m^3)
Kr-83m	7.56 E-02	0.00 E+00	1.93 E+01	2.88 E+02
Kr-85m	1.17 E+03	1.46 E+03	1.23 E+03	1.97 E+03
Kr-85	1.61 E+01	1.34 E+03	1.72 E+01	1.95 E+03
Kr-87	5.92 E+03	9.73 E+03	6.17 E+03	1.03 E+04
Kr-88	1.47 E+04	2.37 E+03	1.52 E+04	2.93 E+03
Kr-89	1.66 E+04	1.01 E+04	1.73 E+04	1.06 E+04
Kr-90	1.56 E+04	7.29 E+03	1.63 E+04	7.83 E+03
Xe-131m	9.15 E+01	4.76 E+02	1.56 E+02	1.11 E+03
Xe-133m	2.51 E+02	9.94 E+02	3.27 E+02	1.48 E+03
Xe-133	2.94 E+02	3.06 E+02	3.53 E+02	1.05 E+03
Xe-135m	3.12 E+03	7.11 E+02	3.36 E+03	7.39 E+02
Xe-135	1.81 E+03	1.86 E+03	1.92 E+03	2.46 E+03
Xe-137	1.42 E+03	1.22 E+04	1.51 E+03	1.27 E+04
Xe-138	8.83 E+03	4.13 E+03	9.21 E+03	4.75 E+03
Ar-41	8.84 E+03	2.69 E+03	9.30 E+03	3.28 E+03

All values in this table were obtained from Reference 3 (Table B-1), with units converted.

Table 3-6. Dose Factors for Exposure to Direct Radiation from Noble Gases in an Elevated Finite Plume

The contents of this table are not applicable to VEGP.

3.4.3 Dose to a Member of the Public at or Beyond Site Boundary

The dose received by an individual due to gaseous releases from each reactor unit, to areas at or beyond the SITE BOUNDARY, depends on the individual's location, age group, and exposure pathways. The MEMBER OF THE PUBLIC expected to receive the highest dose in the plant vicinity is referred to as the controlling receptor. The dosimetrically-significant attributes of the currently-defined controlling receptor are presented in Table 3-7.

Doses to a MEMBER OF THE PUBLIC due to gaseous releases of I-131, I-133, tritium, and all radionuclides in particulate form from each unit shall be calculated as follows (equation adapted from Reference 1, page 29, by considering only long-term releases):

$$D_{ja} = 3.17 \times 10^{-8} \sum_{p} \left\{ \sum_{i} R_{aipj} \sum_{v} \left[W_{vip} \cdot \tilde{Q}'_{iv} \right] \right\} \qquad (3.15)$$

where:

D_{ja} = the dose to organ j of an individual in age group a, due to gaseous releases of I-131, I-133, tritium, and all radionuclides in particulate form with half-lives greater than 8 days, in mrem.

3.17×10^{-8} = a units conversion factor: 1 y/(3.15×10^{7} s).

R_{aipj} = the site-specific dose factor for age group a, radionuclide i, exposure pathway p, and organ j. For the purpose of implementing the controls of Section 3.1.4, the exposure pathways applicable to calculating the dose to the currently-defined controlling receptor are included in Table 3-7; values of R_{aipj} for each exposure pathway and radionuclide applicable to calculations of dose to the controlling receptor are included in Tables 3-8 through 3-12.

A detailed discussion of the methods and parameters used for calculating R_{aipj} for the plant site is presented in Chapter 9. That information may be used for recalculating the R_{aipj} values if the underlying parameters change, or for calculating R_{aipj} values for special radionuclides and age groups when performing the assessments discussed in Section 3.4.4 below.

W_{vip} = the annual average relative dispersion or deposition at the location of the controlling receptor, for release pathway v, as appropriate to exposure pathway p and radionuclide i.

For all tritium pathways, and for the inhalation of any radionuclide: W_{vip} is $(\bar{X}/\bar{Q})_{vp}$, the annual average relative dispersion factor for release pathway v, at the location of the controlling receptor (s/m^3). For the ground-plane exposure pathway, and for all ingestion-related pathways for radionuclides other than tritium: W_{vip} is $(\bar{D}/\bar{Q})_{vp}$, the annual average relative deposition factor for release pathway v, at the location of the controlling receptor (m^{-2}). Values of $(\bar{X}/\bar{Q})_{vp}$ and $(\bar{D}/\bar{Q})_{vp}$ for use in calculating the dose to the currently-defined controlling receptor are included in Table 3-7.

$\tilde{Q}'_{iv}$= the cumulative release of radionuclide i from release pathway v, during the period of interest (μCi). For the purpose of implementing the controls of Section 3.1.4, only I-131, I-133, tritium, and all radionuclides in particulate form with half-lives greater than 8 days should be included in this calculation. In any dose assessment using the methods of this sub-section, only radionuclides detectable above background in their respective samples should be included in the calculation.

Because the member of the public dose limit is on a per-unit basis, the summations extend over all gaseous final release pathways for a given *unit*. For a release pathway discharging materials originating in both reactor units, the activity discharged from the release point may be apportioned between the two units in any reasonable manner, provided that all activity released from the plant site is apportioned to one or the other unit.

The gaseous final release pathways at the plant site, and the release elevation for each, are identified in Table 3-4.

Table 3-7. Attributes of the Controlling Receptor

The locations of members of the public in the vicinity of the plant site, and the exposure pathways associated with those locations, are determined in the Annual Land Use Census. Dispersion and deposition values were calculated based on site meteorological data collected for the period January 1, 1985 through December 31, 1987.

Based on an analysis of this information, the current controlling receptor for the plant site is described as follows (References 15 and 22).

Sector:	SSW
Distance:	4.7 miles
Age Group:	Child
Exposure Pathways:	Inhalation, ground plane, cow meat, and garden vegetation

Dispersion Factors $(\bar{X}/\bar{Q})_{vp}$:

Ground-Level release points:	7.78×10^{-8} s/m^3
Mixed-Mode release points:	3.78×10^{-8} s/m^3

Deposition Factors $(\bar{D}/\bar{Q})_{vp}$:

Ground-Level release points:	3.43×10^{-10} m^{-2}
Mixed-Mode release points:	1.99×10^{-10} m^{-2}

3.4.4 Dose Calculations to Support Other Requirements

Case 1: A radiological impact assessment may be required to support evaluation of a reportable event.

Dose calculations may be performed using the equations in Section 3.4.3, with the substitution of the dispersion and deposition parameters [(X/Q) and (D/Q)] for the period covered by the report, and using the appropriate pathway dose factors (R_{aipj}) for the receptor of interest. Methods for calculating (X/Q) and (D/Q) from meteorological data are presented in Chapter 8.

Values of R_{aipj} other than those presented in Tables 3-8 through 3-12 may need to be calculated. Methods and parameters for calculating values of R_{aipj} are presented in Chapter 9. When calculating R_{aipj} for evaluation of an event, pathway and usage factors specific to the receptor involved in the event may be used in place of the values in Chapter 9, if the specific values are known.

Case 2: A dose calculation is required to evaluate the results of the Land Use Census, under the provisions of Section 4.1.2.

In the event that the Land Use Census reveals that exposure pathways have changed at previously-identified locations, or if new locations are identified, it may be necessary to calculate doses at two or more locations to determine which should be designated as the controlling receptor. Such dose calculations may be performed using the equations in Section 3.4.3, with the substitution of the annual average dispersion and deposition values [($\bar{X}/\bar{Q}$) and ($\bar{D}/\bar{Q}$)] for the locations of interest, and using the appropriate pathway dose factors (R_{aipj}) for the receptors of interest.

Methods for calculating (X/Q) and (D/Q) from meteorological data are presented in Chapter 8. The values of R_{aipj} other than those presented in Tables 3-8 through 3-12 may need to be calculated. Methods and parameters for calculating values of R_{aipj} are presented in Chapter 9.

Case 3: Under Section 5.2, a dose calculation maybe required to support the determination of a component of the total dose to a receptor other than that currently defined as the controlling receptor.

Dose calculations would be performed using the equations in Section 3.4.3, with the dispersion and deposition parameters and appropriate values of (R_{aipj}) for the receptor of interest.

Appropriate values of the dispersion and deposition parameters, if not found in Table 3-7, would need to be calculated. Methods for calculating (X/Q) and (D/Q) from meterological data are presented in Chapter 8.

Appropriate values of R_{aipj}, if not found in Tables 3-8 through 3-12, would need to be calculated. Methods and parameters for calculating values of R_{aipj} are presented in Chapter 9.

Table 3-8. R_{aipj} for Ground Plane Pathway, All Age Groups

Nuclide	T. Body	Skin
H-3	0.00	0.00
C-14	0.00	0.00
P-32	0.00	0.00
Cr-51	4.66E+06	5.51E+06
Mn-54	1.39E+09	1.63E+09
Fe-55	0.00	0.00
Fe-59	2.73E+08	3.21E+08
Co-58	3.79E+08	4.44E+08
Co-60	2.15E+10	2.53E+10
Ni-63	0.00	0.00
Zn-65	7.47E+08	8.59E+08
Rb-86	8.99E+06	1.03E+07
Sr-89	2.16E+04	2.51E+04
Sr-90	0.00	0.00
Y-91	1.07E+06	1.21E+06
Zr-95	2.45E+08	2.84E+08
Nb-95	1.37E+08	1.61E+08
Ru-103	1.08E+08	1.26E+08
Ru-106	4.22E+08	5.07E+08
Ag-110m	3.44E+09	4.01E+09
Sb-124	5.98E+08	6.90E+08
Sb-125	2.34E+09	2.64E+09
Te-125m	1.55E+06	2.13E+06
Te-127m	9.16E+04	1.08E+05
Te-129m	1.98E+07	2.31E+07
I-131	1.72E+07	2.09E+07
I-133	2.45E+06	2.98E+06
Cs-134	6.86E+09	8.00E+09
Cs-136	1.51E+08	1.71E+08
Cs-137	1.03E+10	1.20E+10
Ba-140	2.05E+07	2.35E+07
Ce-141	1.37E+07	1.54E+07
Ce-144	6.95E+07	8.04E+07
Pr-143	0.00	0.00
Nd-147	8.39E+06	1.01E+07

1. Units are $m^2 \cdot (mrem/yr)/(\mu Ci/s)$.
2. The values in the Total Body column also apply to the Bone, Liver, Thyroid, Kidney, Lung, and GI-LLI organs.
3. This table also supports the calculations of section 6.2.

Table 3-9. R_{aipj} for Inhalation Pathway, Child Age Group

Nuclide	Bone	Liver	T. Body	Thyroid	Kidney	Lung	GI-LLI
H-3	0.00	1.12E+03	1.12E+03	1.12E+03	1.12E+03	1.12E+03	1.12E+03
C-14	3.59E+04	6.73E+03	6.73E+03	6.73E+03	6.73E+03	6.73E+03	6.73E+03
P-32	2.60E+06	1.14E+05	9.88E+04	0.00	0.00	0.00	4.22E+04
Cr-51	0.00	0.00	1.54E+02	8.55E+01	2.43E+01	1.70E+04	1.08E+03
Mn-54	0.00	4.29E+04	9.51E+03	0.00	1.00E+04	1.58E+06	2.29E+04
Fe-55	4.74E+04	2.52E+04	7.77E+03	0.00	0.00	1.11E+05	2.87E+03
Fe-59	2.07E+04	3.34E+04	1.67E+04	0.00	0.00	1.27E+06	7.07E+04
Co-58	0.00	1.77E+03	3.16E+03	0.00	0.00	1.11E+06	3.44E+04
Co-60	0.00	1.31E+04	2.26E+04	0.00	0.00	7.07E+06	9.62E+04
Ni-63	8.21E+05	4.63E+04	2.80E+04	0.00	0.00	2.75E+05	6.33E+03
Zn-65	4.26E+04	1.13E+05	7.03E+04	0.00	7.14E+04	9.95E+05	1.63E+04
Rb-86	0.00	1.98E+05	1.14E+05	0.00	0.00	0.00	7.99E+03
Sr-89	5.99E+05	0.00	1.72E+04	0.00	0.00	2.16E+06	1.67E+05
Sr-90	1.01E+08	0.00	6.44E+06	0.00	0.00	1.48E+07	3.43E+05
Y-91	9.14E+05	0.00	2.44E+04	0.00	0.00	2.63E+06	1.84E+05
Zr-95	1.90E+05	4.18E+04	3.70E+04	0.00	5.96E+04	2.23E+06	6.11E+04
Nb-95	2.35E+04	9.18E+03	6.55E+03	0.00	8.62E+03	6.14E+05	3.70E+04
Ru-103	2.79E+03	0.00	1.07E+03	0.00	7.03E+03	6.62E+05	4.48E+04
Ru-106	1.36E+05	0.00	1.69E+04	0.00	1.84E+05	1.43E+07	4.29E+05
Ag-110m	1.69E+04	1.14E+04	9.14E+03	0.00	2.12E+04	5.48E+06	1.00E+05
Sb-124	0.00	0.00	0.00	0.00	0.00	0.00	0.00
Sb-125	0.00	0.00	0.00	0.00	0.00	0.00	0.00
Te-125m	6.73E+03	2.33E+03	9.14E+02	1.92E+03	0.00	4.77E+05	3.38E+04
Te-127m	2.49E+04	8.55E+03	3.02E+03	6.07E+03	6.36E+04	1.48E+06	7.14E+04
Te-129m	1.92E+04	6.85E+03	3.04E+03	6.33E+03	5.03E+04	1.76E+06	1.82E+05
I-131	4.81E+04	4.81E+04	2.73E+04	1.62E+07	7.88E+04	0.00	2.84E+03
I-133	1.66E+04	2.03E+04	7.70E+03	3.85E+06	3.38E+04	0.00	5.48E+03
Cs-134	6.51E+05	1.01E+06	2.25E+05	0.00	3.30E+05	1.21E+05	3.85E+03
Cs-136	6.51E+04	1.71E+05	1.16E+05	0.00	9.55E+04	1.45E+04	4.18E+03
Cs-137	9.07E+05	8.25E+05	1.28E+05	0.00	2.82E+05	1.04E+05	3.62E+03
Ba-140	7.40E+04	6.48E+01	4.33E+03	0.00	2.11E+01	1.74E+06	1.02E+05
Ce-141	3.92E+04	1.95E+04	2.90E+03	0.00	8.55E+03	5.44E+05	5.66E+04
Ce-144	6.77E+06	2.12E+06	3.61E+05	0.00	1.17E+06	1.20E+07	3.89E+05
Pr-143	1.85E+04	5.55E+03	9.14E+02	0.00	3.00E+03	4.33E+05	9.73E+04
Nd-147	1.08E+04	8.73E+03	6.81E+02	0.00	4.81E+03	3.28E+05	8.21E+04

1. Units are (mrem/yr)/(μCi/m^3) for all radionuclides.
2. This table also supports the calculations of section 6.2.

Table 3-10. R_{aipj} for Inhalation Pathway, Adult Age Group

Nuclide	Bone	Liver	T. Body	Thyroid	Kidney	Lung	GI-LLI
H-3	0.00	1.26E+03	1.26E+03	1.26E+03	1.26E+03	1.26E+03	1.26E+03
C-14	1.82E+04	3.41E+03	3.41E+03	3.41E+03	3.41E+03	3.41E+03	3.41E+03
P-32	1.32E+06	7.71E+04	5.01E+04	0.00	0.00	0.00	8.64E+04
Cr-51	0.00	0.00	1.00E+02	5.95E+01	2.28E+01	1.44E+04	3.32E+03
Mn-54	0.00	3.96E+04	6.30E+03	0.00	9.84E+03	1.40E+06	7.74E+04
Fe-55	2.46E+04	1.70E+04	3.94E+03	0.00	0.00	7.21E+04	6.03E+03
Fe-59	1.18E+04	2.78E+04	1.06E+04	0.00	0.00	1.02E+06	1.88E+05
Co-58	0.00	1.58E+03	2.07E+03	0.00	0.00	9.28E+05	1.06E+05
Co-60	0.00	1.15E+04	1.48E+04	0.00	0.00	5.97E+06	2.85E+05
Ni-63	4.32E+05	3.14E+04	1.45E+04	0.00	0.00	1.78E+05	1.34E+04
Zn-65	3.24E+04	1.03E+05	4.66E+04	0.00	6.90E+04	8.64E+05	5.34E+04
Rb-86	0.00	1.35E+05	5.90E+04	0.00	0.00	0.00	1.66E+04
Sr-89	3.04E+05	0.00	8.72E+03	0.00	0.00	1.40E+06	3.50E+05
Sr-90	9.92E+07	0.00	6.10E+06	0.00	0.00	9.60E+06	7.22E+05
Y-91	4.62E+05	0.00	1.24E+04	0.00	0.00	1.70E+06	3.85E+05
Zr-95	1.07E+05	3.44E+04	2.33E+04	0.00	5.42E+04	1.77E+06	1.50E+05
Nb-95	1.41E+04	7.82E+03	4.21E+03	0.00	7.74E+03	5.05E+05	1.04E+05
Ru-103	1.53E+03	0.00	6.58E+02	0.00	5.83E+03	5.05E+05	1.10E+05
Ru-106	6.91E+04	0.00	8.72E+03	0.00	1.34E+05	9.36E+06	9.12E+05
Ag-110m	1.08E+04	1.00E+04	5.94E+03	0.00	1.97E+04	4.63E+06	3.02E+05
Sb-124	3.12E+04	5.89E+02	1.24E+04	7.55E+01	0.00	2.48E+06	4.06E+05
Sb-125	6.61E+04	7.13E+02	1.33E+04	5.87E+01	0.00	2.20E+06	1.01E+05
Te-125m	3.42E+03	1.58E+03	4.67E+02	1.05E+03	1.24E+04	3.14E+05	7.06E+04
Te-127m	1.26E+04	5.77E+03	1.57E+03	3.29E+03	4.58E+04	9.60E+05	1.50E+05
Te-129m	9.76E+03	4.67E+03	1.58E+03	3.44E+03	3.66E+04	1.16E+06	3.83E+05
I-131	2.52E+04	3.58E+04	2.05E+04	1.19E+07	6.13E+04	0.00	6.28E+03
I-133	8.64E+03	1.48E+04	4.52E+03	2.15E+06	2.58E+04	0.00	8.88E+03
Cs-134	3.73E+05	8.48E+05	7.28E+05	0.00	2.87E+05	9.76E+04	1.04E+04
Cs-136	3.90E+04	1.46E+05	1.10E+05	0.00	8.56E+04	1.20E+04	1.17E+04
Cs-137	4.78E+05	6.21E+05	4.28E+05	0.00	2.22E+05	7.52E+04	8.40E+03
Ba-140	3.90E+04	4.90E+01	2.57E+03	0.00	1.67E+01	1.27E+06	2.18E+05
Ce-141	1.99E+04	1.35E+04	1.53E+03	0.00	6.26E+03	3.62E+05	1.20E+05
Ce-144	3.43E+06	1.43E+06	1.84E+05	0.00	8.48E+05	7.78E+06	8.16E+05
Pr-143	9.36E+03	3.75E+03	4.64E+02	0.00	2.16E+03	2.81E+05	2.00E+05
Nd-147	5.27E+03	6.10E+03	3.65E+02	0.00	3.56E+03	2.21E+05	1.73E+05

1. Units are (mrem/yr)/(μCi/m^3) for all radionuclides.
2. This table is included to support the calculations of section 6.2.

Table 3-11. R_{aipj} for Cow Meat Pathway, Child Age Group

Nuclide	Bone	Liver	T. Body	Thyroid	Kidney	Lung	GI-LLI
H-3	0.00	2.34E+02	2.34E+02	2.34E+02	2.34E+02	2.34E+02	2.34E+02
C-14	5.29E+05	1.06E+05	1.06E+05	1.06E+05	1.06E+05	1.06E+05	1.06E+05
P-32	7.41E+09	3.47E+08	2.86E+08	0.00	0.00	0.00	2.05E+08
Cr-51	0.00	0.00	8.79E+03	4.88E+03	1.33E+03	8.91E+03	4.66E+05
Mn-54	0.00	8.01E+06	2.13E+06	0.00	2.25E+06	0.00	6.72E+06
Fe-55	4.57E+08	2.42E+08	7.51E+07	0.00	0.00	1.37E+08	4.49E+07
Fe-59	3.76E+08	6.09E+08	3.03E+08	0.00	0.00	1.77E+08	6.34E+08
Co-58	0.00	1.64E+07	5.02E+07	0.00	0.00	0.00	9.58E+07
Co-60	0.00	6.93E+07	2.04E+08	0.00	0.00	0.00	3.84E+08
Ni-63	2.91E+10	1.56E+09	9.91E+08	0.00	0.00	0.00	1.05E+08
Zn-65	3.75E+08	1.00E+09	6.22E+08	0.00	6.30E+08	0.00	1.76E+08
Rb-86	0.00	5.77E+08	3.55E+08	0.00	0.00	0.00	3.71E+07
Sr-89	4.82E+08	0.00	1.38E+07	0.00	0.00	0.00	1.87E+07
Sr-90	1.04E+10	0.00	2.64E+09	0.00	0.00	0.00	1.40E+08
Y-91	1.80E+06	0.00	4.82E+04	0.00	0.00	0.00	2.40E+08
Zr-95	2.66E+06	5.85E+05	5.21E+05	0.00	8.38E+05	0.00	6.11E+08
Nb-95	3.10E+06	1.21E+06	8.62E+05	0.00	1.13E+06	0.00	2.23E+09
Ru-103	1.55E+08	0.00	5.96E+07	0.00	3.90E+08	0.00	4.01E+09
Ru-106	4.44E+09	0.00	5.54E+08	0.00	5.99E+09	0.00	6.90E+10
Ag-110m	8.39E+06	5.67E+06	4.53E+06	0.00	1.06E+07	0.00	6.74E+08
Sb-124	0.00	0.00	0.00	0.00	0.00	0.00	0.00
Sb-125	0.00	0.00	0.00	0.00	0.00	0.00	0.00
Te-125m	5.69E+08	1.54E+08	7.59E+07	1.60E+08	0.00	0.00	5.49E+08
Te-127m	1.77E+09	4.78E+08	2.11E+08	4.24E+08	5.06E+09	0.00	1.44E+09
Te-129m	1.79E+09	5.00E+08	2.78E+08	5.77E+08	5.26E+09	0.00	2.18E+09
I-131	1.65E+07	1.66E+07	9.46E+06	5.50E+09	2.73E+07	0.00	1.48E+06
I-133	5.67E-01	7.02E-01	2.66E-01	1.30E+02	1.17E+00	0.00	2.83E-01
Cs-134	9.22E+08	1.51E+09	3.19E+08	0.00	4.69E+08	1.68E+08	8.16E+06
Cs-136	1.62E+07	4.46E+07	2.88E+07	0.00	2.37E+07	3.54E+06	1.57E+06
Cs-137	1.33E+09	1.28E+09	1.88E+08	0.00	4.16E+08	1.50E+08	7.99E+06
Ba-140	4.38E+07	3.84E+04	2.56E+06	0.00	1.25E+04	2.29E+04	2.22E+07
Ce-141	2.22E+04	1.11E+04	1.64E+03	0.00	4.86E+03	0.00	1.38E+07
Ce-144	2.32E+06	7.26E+05	1.24E+05	0.00	4.02E+05	0.00	1.89E+08
Pr-143	3.34E+04	1.00E+04	1.66E+03	0.00	5.43E+03	0.00	3.60E+07
Nd-147	1.17E+04	9.47E+03	7.33E+02	0.00	5.19E+03	0.00	1.50E+07

Units are (mrem/yr)/(μCi/m^3) for tritium, and m^2·(mrem/yr)/(μCi/s) for all other radionuclides.

Table 3-12. R_{aipj} for Garden Vegetation Pathway, Child Age Group

Nuclide	Bone	Liver	T.Body	Thyroid	Kidney	Lung	GI-LLI
H-3	0.00	4.01E+03	4.01E+03	4.01E+03	4.01E+03	4.01E+03	4.01E+03
C-14	8.89E+08	1.78E+08	1.78E+08	1.78E+08	1.78E+08	1.78E+08	1.78E+08
P-32	3.37E+09	1.58E+08	1.30E+08	0.00	0.00	0.00	9.31E+07
Cr-51	0.00	0.00	1.17E+05	6.50E+04	1.78E+04	1.19E+05	6.21E+06
Mn-54	0.00	6.65E+08	1.77E+08	0.00	1.86E+08	0.00	5.58E+08
Fe-55	8.01E+08	4.25E+08	1.32E+08	0.00	0.00	2.40E+08	7.87E+07
Fe-59	3.98E+08	6.43E+08	3.20E+08	0.00	0.00	1.86E+08	6.70E+08
Co-58	0.00	6.44E+07	1.97E+08	0.00	0.00	0.00	3.76E+08
Co-60	0.00	3.78E+08	1.12E+09	0.00	0.00	0.00	2.10E+09
Ni-63	3.95E+10	2.11E+09	1.34E+09	0.00	0.00	0.00	1.42E+08
Zn-65	8.13E+08	2.16E+09	1.35E+09	0.00	1.36E+09	0.00	3.80E+08
Rb-86	0.00	4.52E+08	2.78E+08	0.00	0.00	0.00	2.91E+07
Sr-89	3.60E+10	0.00	1.03E+09	0.00	0.00	0.00	1.39E+09
Sr-90	1.24E+12	0.00	3.15E+11	0.00	0.00	0.00	1.67E+10
Y-91	1.86E+07	0.00	4.99E+05	0.00	0.00	0.00	2.48E+09
Zr-95	3.86E+06	8.48E+05	7.55E+05	0.00	1.21E+06	0.00	8.85E+08
Nb-95	4.10E+05	1.60E+05	1.14E+05	0.00	1.50E+05	0.00	2.96E+08
Ru-103	1.53E+07	0.00	5.90E+06	0.00	3.86E+07	0.00	3.97E+08
Ru-106	7.45E+08	0.00	9.30E+07	0.00	1.01E+09	0.00	1.16E+10
Ag-110m	3.21E+07	2.17E+07	1.73E+07	0.00	4.04E+07	0.00	2.58E+09
Sb-124	0.00	0.00	0.00	0.00	0.00	0.00	0.00
Sb-125	0.00	0.00	0.00	0.00	0.00	0.00	0.00
Te-125m	3.51E+08	9.50E+07	4.67E+07	9.84E+07	0.00	0.00	3.38E+08
Te-127m	1.32E+09	3.56E+08	1.57E+08	3.16E+08	3.77E+09	0.00	1.07E+09
Te-129m	8.41E+08	2.35E+08	1.31E+08	2.71E+08	2.47E+09	0.00	1.03E+09
I-131	1.43E+08	1.44E+08	8.17E+07	4.75E+10	2.36E+08	0.00	1.28E+07
I-133	3.53E+06	4.37E+06	1.65E+06	8.11E+08	7.28E+06	0.00	1.76E+06
Cs-134	1.60E+10	2.63E+10	5.55E+09	0.00	8.15E+09	2.93E+09	1.42E+08
Cs-136	8.24E+07	2.27E+08	1.47E+08	0.00	1.21E+08	1.80E+07	7.96E+06
Cs-137	2.39E+10	2.29E+10	3.38E+09	0.00	7.46E+09	2.68E+09	1.43E+08
Ba-140	2.77E+08	2.42E+05	1.61E+07	0.00	7.89E+04	1.45E+05	1.40E+08
Ce-141	6.56E+05	3.27E+05	4.86E+04	0.00	1.43E+05	0.00	4.08E+08
Ce-144	1.27E+08	3.98E+07	6.78E+06	0.00	2.21E+07	0.00	1.04E+10
Pr-143	1.46E+05	4.37E+04	7.23E+03	0.00	2.37E+04	0.00	1.57E+08
Nd-147	7.15E+04	5.79E+04	4.48E+03	0.00	3.18E+04	0.00	9.17E+07

Units are (mrem/yr)/(μCi/m^3) for tritium, and m^2·(mrem/yr)/(μCi/s) for all other radionuclides.

3.5 GASEOUS EFFLUENT DOSE PROJECTIONS

3.5.1 Thirty-One Day Dose Projections

In order to meet the requirements of the limit for operation of the gaseous radwaste treatment system (see Section 3.1.5), dose projections must be made at least once each 31 days; this applies during periods in which a discharge to areas at or beyond the SITE BOUNDARY of gaseous effluents containing radioactive materials occurs or is expected.

Projected 31-day air doses and doses to individuals due to gaseous effluents may be determined as follows:

For air doses:

$$D_{\beta p} = \left(\frac{D_{\beta c}}{t}\right) \times 31 + D_{\beta a}$$

$$D_{\gamma p} = \left(\frac{D_{\gamma c}}{t}\right) \times 31 + D_{\gamma a} \qquad (3.16)$$

For individual doses:

$$D_{op} = \left(\frac{D_{oc}}{t}\right) \times 31 + D_{oa} \qquad (3.17)$$

where:

$D_{\beta p}$ = the projected air dose due to beta emissions from noble gases, for the next 31 days of gaseous releases.

$D_{\beta c}$ = the cumulative air dose due to beta emissions from noble gas releases that have occurred in the elapsed portion of the current quarter, plus the release under consideration.

$D_{\beta a}$ = the anticipated air dose due to beta emissions from noble gas releases, contributed by any planned activities during the next 31-day period, if those activities will result in gaseous releases that are in addition to routine gaseous effluents. If only routine gaseous effluents are anticipated, $D_{\beta a}$ may be set to zero.

$D_{\gamma p}$ = the projected air dose due to gamma emissions from noble gases for the next 31 days of gaseous releases.

$D_{\gamma c}$ = the cumulative air dose due to gamma emissions from noble gas releases that have occurred in the elapsed portion of the current quarter, plus the release under consideration.

$D_{\gamma a}$ = the anticipated air dose due to gamma emissions from noble gas releases, contributed by any planned activities during the next 31-day period, if those activities will result in gaseous releases that are in addition to routine gaseous effluents. If only routine gaseous effluents are anticipated, $D_{\gamma a}$ may be set to zero.

D_{op} = the projected dose to the total body or organ o, due to releases of I-131, I-133, tritium, and particulates for the next 31 days of gaseous releases.

D_{oc} = the cumulative dose to the total body or organ o, due to releases of I-131, I-133, tritium, and particulates that have occurred in the elapsed portion of the current quarter, plus the release under consideration.

D_{oa} = the anticipated dose to the total body or organ o, due to releases of I-131, I-133, tritium, and particulates, contributed by any planned activities during the next 31-day period, if those activities will result in gaseous releases that are in addition to routine gaseous effluents. If only routine gaseous effluents are anticipated, D_{oa} may be set to zero.

t = the number of whole or partial days elapsed into the current quarter, including the time to the end of the release under consideration (even if the release continues into the next quarter).

3.5.2 Dose Projections for Specific Releases

Dose projections may be performed for a particular release by performing a pre-release dose calculation assuming that the planned release will proceed as anticipated. For air dose and individual dose projections due to gaseous effluent releases, follow the methodology of Section 3.4, using sample analysis results for the gaseous stream to be released, and parameter values expected to exist during the release period.

3.6 DEFINITIONS OF GASEOUS EFFLUENT TERMS

Term	Definition	Section of Initial Use
AG =	the administrative allocation factor for gaseous streams, applied to divide the gaseous release limit among all the release pathways [unitless].	3.3.2.1
AG_s =	the administrative allocation factor for gaseous source stream s, applied to divide the gaseous release limit among all the release pathways [unitless].	3.3.3
AG_v =	the administrative allocation factor for gaseous release pathway v, applied to divide the gaseous release limit among all the release pathways [unitless].	3.3.2.2
c =	the setpoint of the radioactivity monitor measuring the concentration of radioactivity in the effluent line prior to release [μCi/mL].	3.3.2.1
c_{ns} =	the calculated noble gas effluent monitor setpoint for gaseous source stream s [μCi/mL].	3.3.3
c_{nv} =	the calculated noble gas effluent monitor setpoint for release pathway v [μCi/mL].	3.3.2.2
D_{ja} =	the dose to organ j of an individual in age group a, due to gaseous releases of I-131, I-133, tritium, and radionuclides in particulate form with half-lives greater than 8 days [mrem].	3.4.3
D_{oa} =	the anticipated dose to organ o due to releases of non-noble-gas radionuclides, contributed by any planned activities during the next 31-day period [mrem].	3.5.1
D_{oc} =	the cumulative dose to organ o due to releases of non-noble-gas radionuclides that have occurred in the elapsed portion of the current quarter, plus the release under consideration [mrem].	3.5.1

Term	Definition	Section of Initial Use
D_{op} =	the projected dose to organ o due to the next 31 days of gaseous releases of non-noble-gas radionuclides [mrem].	3.5.1
D_{β} =	the air dose due to beta emissions from noble gas radionuclides [mrad].	3.4.2
$D_{\beta a}$ =	the anticipated air dose due to beta emissions from noble gas releases, contributed by any planned activities during the next 31-day period [mrad].	3.5.1
$D_{\beta c}$ =	the cumulative air dose due to beta emissions from noble gas releases that have occurred in the elapsed portion of the current quarter, plus the release under consideration [mrad].	3.5.1
$D_{\beta p}$ =	the projected air dose due to beta emissions from noble gases, for the next 31 days of gaseous releases [mrad].	3.5.1
D_{γ} =	the air dose due to gamma emissions from noble gas radionuclides [mrad].	3.4.2
$D_{\gamma a}$ =	the anticipated air dose due to gamma emissions from noble gas releases, contributed by any planned activities during the next 31-day period [mrad].	3.5.1
$D_{\gamma c}$ =	the cumulative air dose due to gamma emissions from noble gas releases that have occurred in the elapsed portion of the current quarter, plus the release under consideration [mrad].	3.5.1
$D_{\gamma p}$ =	the projected air dose due to gamma emissions from noble gases, for the next 31 days of gaseous releases [mrad].	3.5.1

Term	Definition	Section of Initial Use
$(\bar{D}/\bar{Q})_{vp}$ =	the annual average relative deposition factor for release pathway v, at the location of the controlling receptor, from Table 3-7 [m^{-2}].	3.4.3
DR_k =	the skin dose rate at the time of the release [mrem/y].	3.4.1.1
DR_o =	the dose rate to organ o at the time of the release [mrem/y].	3.4.1.2
DR_t =	the total body dose rate at the time of the release [mrem/y].	3.4.1.1
f_{av} =	the maximum anticipated actual discharge flowrate for release pathway v during the period of the planned release [mL/s].	3.3.2.2
f_{as} =	the maximum anticipated actual discharge flowrate for gaseous source stream s during the period of the planned release [mL/s].	3.3.3
K_i =	the total body dose factor due to gamma emissions from noble gas radionuclide i, from Table 3-5 [(mrem/y)/(μCi/m^3)].	3.3.2.2
L_i =	the skin dose factor due to beta emissions from noble gas radionuclide i, from Table 3-5 [(mrem/y)/(μCi/m^3)].	3.3.2.2
M_i =	the air dose factor due to gamma emissions from noble gas radionuclide i, from Table 3-5 [(mrad/y)/(μCi/m^3)].	3.4.2
N =	the number of simultaneously active gaseous release pathways [unitless].	3.3.4

Term	Definition	Section of Initial Use
N_i =	the air dose factor due to beta emissions from noble gas radionuclide i, from Table 3-5 [(mrad/y)/(μCi/m^3)].	3.4.2
P_{io} =	the site-specific dose factor for radionuclide i (I-131, I-133, tritium, and radionuclides in particulate form with half-lives greater than 8 days) and organ o. The values of P_{io} are equal to the site-specific R_{aipj} values presented in Table 3-9 [(mrem/y)/(μCi/m^3)].	3.4.1.2
Q_{iv} =	the release rate of noble gas radionuclide i from release pathway v during the period of interest [μCi/s].	3.3.2.2
$Q^{\{}_{iv}$=	the release rate of radionuclide i (I-131, I-133, tritium, and radionuclides in particulate form with half-lives greater than 8 days) from gaseous release pathway v during the period of interest [μCi/s].	3.4.1.2
$\tilde{Q}_{iv}$ =	the cumulative release of noble gas radionuclide i from release pathway v during the period of interest [μCi].	3.4.2
$\tilde{Q}^{\{}_{iv}$=	the cumulative release of non-noble-gas radionuclide i from release pathway v, during the period of interest [μCi].	3.4.3
R_{aipj} =	the site-specific dose factor for age group a, radionuclide i, exposure pathway p, and organ j. Values and units of R_{aipj} for each exposure pathway, age group, and radionuclide that may arise in calculations for implementing Section 3.1.4 are listed in Table 3-8 through Table 3-9.	3.4.3
R_k =	the ratio of the skin dose rate limit for noble gases, to the skin dose rate due to noble gases in the release under consideration [unitless].	3.3.2.1

Term	Definition	Section of Initial Use
R_t =	the ratio of the total body dose rate limit for noble gases, to the total body dose rate due to noble gases in the release under consideration [unitless].	3.3.2.1
r_k =	the ratio of the skin dose rate limit for noble gases, to the skin dose rate due to noble gases in the source stream under consideration [unitless].	3.3.3.1
r_t =	the ratio of the total body dose rate limit for noble gases, to the total body dose rate due to noble gases in the source stream under consideration [unitless].	3.3.3.1
SF =	the safety factor used in gaseous setpoint calculations to compensate for statistical fluctuations and errors of measurement [unitless].	3.3.2.2
t =	the number of whole or partial days elapsed in the current quarter, including the period of the release under consideration.	3.5.1
W_{vip} =	the annual average relative dispersion $[(\bar{X}/\bar{Q})_{vp}]$ or deposition $[(\bar{D}/\bar{Q})_{vp}]$ at the location of the controlling receptor, for release pathway v, as appropriate to exposure pathway p and radionuclide i.	3.4.3
X =	the noble gas concentration for the release under consideration [μCi/mL].	3.3.2.1
X_{ir} =	the concentration of radionuclide i applicable to active gaseous release pathway r [μCi/mL].	3.3.4
X_{is} =	the measured concentration of radionuclide i in gaseous source stream s [μCi/mL].	3.3.3
X_{iv} =	the measured concentration of radionuclide i in gaseous stream v [μCi/mL].	3.3.2.2

Term	Definition	Section of Initial Use
(X/Q) =	the highest relative concentration at any point at or beyond the SITE BOUNDARY [s/m^3].	3.3.2.1
$(\bar{X}/\bar{Q})_{rb}$ =	the annual average SITE BOUNDARY relative concentration applicable to active gaseous release pathway r [s/m^3].	3.3.4
$(\bar{X}/\bar{Q})_{vb}$ =	the highest annual average relative concentration at the SITE BOUNDARY for the discharge point of release pathway v, from Table 3-4 [s/m^3].	3.3.2.2
$(\bar{X}/\bar{Q})_{vp}$ =	annual average relative dispersion factor for release pathway v, at the location of the controlling receptor, from Table 3-7 [s/m^3].	3.4.3

CHAPTER 4
RADIOLOGICAL ENVIRONMENTAL MONITORING PROGRAM

4.1 LIMITS OF OPERATION

The following limits are the same for both units at the site. Thus, a single program including monitoring, land use census, and quality assurance serves both units.

4.1.1 Radiological Environmental Monitoring

The Radiological Environmental Monitoring Program (REMP) shall be conducted as specified in Table 4-1.

4.1.1.1 Applicability

This control applies at all times.

4.1.1.2 Actions

4.1.1.2.1 With the REMP not being conducted as specified in Table 4-1, submit to the Nuclear Regulatory Commission (NRC), in the Annual Radiological Environmental Operating Report, a description of the reasons for not conducting the program as required and the plans for preventing a recurrence. Deviations from the required sampling schedule are permitted if specimens are unobtainable due to hazardous conditions, unavailability, inclement weather, equipment malfunction, or other just reasons. If deviations are due to equipment malfunction, efforts shall be made to complete corrective action prior to the end of the next sampling period.

4.1.1.2.2 With the confirmed[1] measured level of radioactivity as a result of plant effluents in an environmental sampling medium specified in Table 4-1 exceeding the reporting levels of Table 4-2 when averaged over any calendar quarter, submit within 30 days a special report to the NRC. The special report shall identify the cause(s) for exceeding the limit(s) and define the corrective action(s) to be taken to reduce radioactive effluents so that the potential annual dose to a MEMBER OF THE PUBLIC is less than the calendar year limits of Sections 2.1.3, 3.1.3, and 3.1.4. The methodology and parameters used to

---

1 Defined as confirmed by reanalysis of the original sample, or analysis of a duplicate or new sample, as appropriate. The results of the confirmatory analysis shall be completed at the earliest time consistent with the analysis.

estimate the potential annual dose to a MEMBER OF THE PUBLIC shall be indicated in the special report.

When more than one of the radionuclides in Table 4-2 are detected in the sampling medium, this report shall be submitted if:

$$\frac{concentration\ (1)}{reporting\ level\ (1)} + \frac{concentration\ (2)}{reporting\ level\ (2)} + \ldots \geq 1.0$$

When radionuclides other than those in Table 4-2 are detected and are the result of plant effluents, this special report shall be submitted if the potential annual dose to a MEMBER OF THE PUBLIC is equal to or greater than the calendar year limits stated in Sections 2.1.3, 3.1.3, and 3.1.4. This special report is not required if the measured level of radioactivity was not the result of plant effluents; however, in such an event, the condition shall be described in the Annual Radiological Environmental Operating Report. The levels of naturally-occurring radionuclides which are not included in the plant's effluent releases need not be reported.

4.1.1.2.3 If adequate samples of milk, or during the growing season, grass or leafy vegetation, can no longer be obtained from one or more of the sample locations required by Table 4-1, or if the availability is frequently or persistently wanting, efforts shall be made: to identify specific locations for obtaining suitable replacement samples; and to add any replacement locations to the REMP given in the ODCM within 30 days. The specific locations from which samples became unavailable may be deleted from the REMP. Pursuant to Technical Specification 5.5.1, documentation shall be submitted in the next Radioactive Effluent Release Report for the change(s) in the ODCM, including revised figure(s) and table(s) reflecting the changes to the location(s), with supporting information identifying the cause of the unavailability of samples and justifying the selection of any new location(s).

4.1.1.2.4 This control does not affect shutdown requirements or MODE changes.

4.1.1.3 Surveillance Requirements

The REMP samples shall be collected pursuant to Table 4-1 from the locations described in Section 4.2, and shall be analyzed pursuant to the requirements of Table 4-1 and Table 4-3. Required detection capabilities for thermoluminescent dosimeters used for environmental measurements shall be in accordance with the recommendations of Regulatory Guide 4.13. Program changes may be initiated based on operational experience.

Analyses shall be performed in such a manner that the stated MINIMUM DETECTABLE CONCENTRATIONs (MDCs) will be achieved under routine conditions. Occasionally background fluctuations, unavoidable small sample sizes, the presence of interfering radionuclides, or other uncontrollable circumstances may render these MDCs unachievable. In such cases, the contributing factors will be identified and described in the Annual Radiological Environmental Operating Report.

4.1.1.4 Basis

The REMP required by this control provides representative measurements of radiation and of radioactive materials in those exposure pathways, and for those radionuclides, which lead to the highest potential radiation exposures of MEMBERS OF THE PUBLIC resulting from the plant operation. The REMP implements Section IV.B.2, Appendix I, 10 CFR 50, and thereby supplements the radiological effluent monitoring program by measuring concentrations of radioactive materials and levels of radiation, which may then be compared with those expected on the basis of the effluent measurements and modeling of the environmental exposure pathways.

The detection capabilities required by Table 4-3 are within state-of-the-art for routine environmental measurements in industrial laboratories.

Table 4-1. Radiological Environmental Monitoring Program

Exposure Pathway and/or Sample	Number of Representative Samples and Sample Locations(1)	Sampling and Collection Frequency	Type and Frequency of Analysis
	1. DIRECT RADIATION		
Direct Radiation(2)	Thirty-six or more routine monitoring stations, either with two or more dosimeters, or with one instrument for measuring and recording dose rate continuously, placed as follows: An inner ring of stations, one in each meteorological sector in the general area of the site boundary. An outer ring of stations, one in each meteorological sector at approximately 5 miles from the site. The balance of the stations to be placed in special interest areas such as population centers, nearby residences, schools, and in one or more areas to serve as control stations.	Quarterly.	Gamma dose quarterly.
	2. AIRBORNE		
Radioiodine and Particulates	Samples from 5 or more locations as follows: Three or more samples from close to the three site boundary locations, in different sectors. One sample from the vicinity of a community having the highest calculated annual average ground-level D/Q. One sample from a control location, as, for example, a population center 10 to 20 miles distant and in the least prevalent wind direction.	Continuous sampler operation with sample collection weekly, or more frequently if required by dust loading.	Radioiodine Canister: I-131 analysis weekly. Particulate Sampler: Gross beta radioactivity analysis following filter change, and gamma isotopic analysis of composite (by location) quarterly.(3)(4)

Table 4-1 (contd). Radiological Environmental Monitoring Program

Exposure Pathway and/or Sample	Number of Representative Samples and Sample Locations(1)	Sampling and Collection Frequency	Type and Frequency of Analysis
	3. WATERBORNE		
Surface(5)	One sample upstream. One sample downstream.	Composite sample over 1-month period.(6)	Gamma isotopic analysis monthly; composite for tritium analysis quarterly.(4)
Drinking	Two samples at each of the one to three nearest water treatment plants that could be affected by discharges from the facility. Two samples at a control location.	Composite sample of river water near intake at each water treatment plant over 2-week period when I-131 analysis is performed, monthly composite otherwise; and grab sample of finished water at each water treatment plant every 2 weeks or monthly, as appropriate.(6)	I-131 analysis on each sample when the dose calculated for the consumption of the water is greater than 1 mrem per year. Composite for gross beta and gamma isotopic analyses monthly. Composite for tritium analysis quarterly.(4)(7)
Sediment from Shoreline	One sample from downstream area with existing or potential recreational value.	Semiannually.	Gamma isotopic analysis semiannually.(4)

Table 4-1 (contd). Radiological Environmental Monitoring Program

Exposure Pathway and/or Sample	Number of Representative Samples and Sample Locations (1)	Sampling and Collection Frequency	Type and Frequency of Analysis
	4. INGESTION		
Milk	Samples from milking animals in three locations within 3 miles distance having the highest dose potential; if there are none, then one sample from milking animals in each of three areas between 3 and 5 miles distance where doses are calculated to be greater than 1 mrem per year. (7) One sample from milking animals at a control location about 10 miles distant or beyond, and preferably in a wind direction of low prevalence.	Semimonthly.	Gamma isotopic analysis semi-monthly. (4) (8)
Fish	At least one sample of any commercially and recreationally important species in vicinity of plant discharge area. At least one sample of any species in areas not influenced by plant discharge.	Semiannually.	Gamma isotopic analyses on edible portions. (4)
	At least one sample of any anadromous species in vicinity of plant discharge.	During spring spawning season.	Gamma isotopic analyses on edible portion. (4)
Grass or Leafy Vegetation	One sample from two onsite locations near the site boundary in different sectors.	Monthly during growing season.	Gamma isotopic. (4) (8)
	One sample from a control location about 15 miles distant.	Monthly during growing season.	Gamma isotopic. (4) (8)

TABLE NOTATIONS

(1) For each sample location in this table, specific parameters of distance and direction sector from a point midway between the center of the two reactors, and additional description where pertinent, are provided in Table 4-4, and in Figure 4-1 through Figure 4-4 of this ODCM.

(2) One or more instruments, such as a pressurized ion chamber, for measuring and recording dose rate continuously, may be used in place of or in addition to integrating dosimeters. For the purpose of this table, a thermoluminescent dosimeter (TLD) is considered to be one phosphor; two or more phosphors in a packet are considered as two or more dosimeters. Film badges shall not be used as dosimeters for measuring direct radiation.

(3) Airborne particulate sample filters shall be analyzed for gross beta radioactivity 24 hours or more after sampling to allow for radon and thoron daughter decay. If gross beta activity in air particulate samples is greater than 10 times the yearly mean of control samples, gamma isotopic analysis shall be performed on the individual samples.

(4) Gamma isotopic analysis means the identification and quantification of gamma-emitting radionuclides that may be attributable to the effluents from the facility.

(5) The upstream sample shall be taken at a distance beyond significant influence of the discharge. The downstream sample shall be taken in an area beyond but near the mixing zone.

(6) Composite sample aliquots shall be collected at time intervals that are very short (e.g., hourly) relative to the compositing period (e.g., monthly) in order to assure obtaining a representative sample.

(7) The dose shall be calculated for the maximum organ and age group, using the methodology and parameters in the ODCM.

(8) If gamma isotopic analysis is not sensitive enough to meet the required MDC for I-131, a separate analysis for I-131 will be performed.

Table 4-2. Reporting Levels for Radioactivity Concentrations in Environmental Samples

Analysis	Water (pCi/L)	Airborne Particulate or Gases (pCi/m^3)	Fish (pCi/kg, wet)	Milk (pCi/L)	Grass or Leafy Vegetation (pCi/kg, wet)
H-3	2 E+4[a]				
Mn-54	1 E+3		3 E+4		
Fe-59	4 E+2		1 E+4		
Co-58	1 E+3		3 E+4		
Co-60	3 E+2		1 E+4		
Zn-65	3 E+2		2 E+4		
Zr-95	4 E+2				
Nb-95	7 E+2				
I-131	2 E+0[b]	9 E-1		3 E+0	1 E+2
Cs-134	3 E+1	1 E+1	1 E+3	6 E+1	1 E+3
Cs-137	5 E+1	2 E+1	2 E+3	7 E+1	2 E+3
Ba-140	2 E+2			3 E+2	
La-140	1 E+2			4 E+2	

a. This is the 40 CFR 141 value for drinking water samples. If no drinking water pathway exists, a value of 3 E+04 pCi/L may be used.

b. If no drinking water pathway exists, a value of 20 pCi/L may be used.

Table 4-3. Values for the Minimum Detectable Concentration (MDC)

Analysis	Minimum Detectable Concentration (MDC)[a]					
	Water (pCi/L)	Airborne Particulate or Gases (pCi/m^3)	Fish (pCi/kg, wet)	Milk (pCi/L)	Grass or Leafy Vegetation (pCi/kg, wet)	Sediment (pCi/kg, dry)
Gross Beta	4 E+0	1 E-2				
H-3	2 E+3[b]					
Mn-54	1.5 E+1		1.3 E+2			
Fe-59	3 E+1		2.6 E+2			
Co-58, Co-60	1.5 E+1		1.3 E+2			
Zn-65	3 E+1		2.6 E+2			
Zr-95	3 E+1					
Nb-95	1.5 E+1					
I-131	1 E+0[c]	7 E-2		1 E+0	6 E+1	
Cs-134	1.5 E+1	5 E-2	1.3 E+2	1.5 E+1	6 E+1	1.5 E+2
Cs-137	1.8 E+1	6 E-2	1.5 E+2	1.8 E+1	8 E+1	1.8 E+2
Ba-140	6 E+1			6 E+1		
La-140	1.5 E+1			1.5 E+1		

a. See the definition of MINIMUM DETECTABLE CONCENTRATION in Section 10.1. Other peaks which are measurable and identifiable as plant effluents, together with the radionuclides in this table, shall be analyzed and reported in accordance with Section 7.1.

b. If no drinking water pathway exists, a value of 3 E+3 pCi/L may be used.

c. If no drinking water pathway exists, a value of 1.5 E+1 pCi/L may be used.

4.1.2 Land Use Census

A land use census shall be conducted and shall identify the following within a distance of 5 miles in each of the 16 meteorological sectors: the location of the nearest milk animal,[1] the nearest permanent residence, and the nearest garden of greater than 500 square feet producing broad leafy vegetation. Land within the Savannah River Site is excluded from this census.

4.1.2.1 Applicability

This control applies at all times.

4.1.2.2 Actions

4.1.2.2.1 With a land use census identifying a location(s) which yields a calculated dose or dose commitment greater than values currently being calculated in accordance with Section 3.4.3, identify the new location(s) in the next Radioactive Effluent Release Report.

4.1.2.2.2 With a land use census identifying a location(s) which yields a calculated dose or dose commitment (via the same exposure pathway) 20 percent greater than at a location from which samples are currently being obtained in accordance with Section 4.1.1, add the new location(s) to the REMP within 30 days if samples are available. The sampling location, excluding control station location(s), having the lowest calculated dose or dose commitment (via the same exposure pathway) may be deleted from the REMP if new sampling locations are added. Pursuant to Technical Specification 5.5.1 submit in the next Radioactive Effluent Release Report any change(s) in the ODCM, including the revised figure(s) and table(s) reflecting any new location(s) and information supporting the change(s).

4.1.2.2.3 This control does not affect shutdown requirements or MODE changes.

4.1.2.3 Surveillance Requirements

The land use census shall be conducted annually, using that information which will provide good results, such as a door-to-door census, a visual census from automobile or aircraft, consultation with local agriculture authorities, or some combination of these methods, as feasible. Results of the land use census shall be included in the Annual Radiological Environmental Operating Report.

---

1 Defined as a cow or goat that is producing milk for human consumption.

4.1.2.4 Basis

This control is provided to ensure that changes in the use of UNRESTRICTED AREAS are identified and that modifications to the REMP are made if required by the results of this census. This census satisfies the requirements of Section IV.B.3 of Appendix I to 10 CFR Part 50. Restricting the census to gardens of greater than 500 ft^2 provides assurance that significant exposure pathways via leafy vegetables will be identified and monitored since a garden of this size is the minimum required to produce the quantity (26 kg/y) of leafy vegetables assumed in Regulatory Guide 1.109 for consumption by a child. To determine this minimum garden size, the following assumptions were made: (1) 20 percent of the garden was used for growing broad leaf vegetation (i.e., similar to lettuce and cabbage) and (2) a vegetation yield of 2 kg/m^2 was obtained.

4.1.3 Interlaboratory Comparison Program

Analyses shall be performed on radioactive materials supplied as part of an Interlaboratory Comparison Program which satisfies the requirements of Regulatory Guide 4.15, Revision 1, February, 1979.

4.1.3.1 Applicability

This control applies at all times.

4.1.3.2 Actions

With analyses not being performed as required by Section 4.1.3, report the corrective actions taken to prevent a recurrence in the Annual Radiological Environmental Operating Report.

This control does not affect shutdown requirements or MODE changes.

4.1.3.3 Surveillance Requirements

A summary of the results obtained as part of the required Interlaboratory Comparison Program shall be included in the Annual Radiological Environmental Operating Report.

4.1.3.4 Basis

The requirement for participation in an approved Interlaboratory Comparison Program is provided to ensure that independent checks on the precision and accuracy of the measurements of radioactive material in environmental sample matrices are performed as part of the quality assurance program for environmental monitoring, in order to demonstrate that the results are reasonably valid for the purposes of Section IV.B.2, Appendix I, 10 CFR 50.

4.2 RADIOLOGICAL ENVIRONMENTAL MONITORING LOCATIONS

Table 4-4, and Figure 4-1 through Figure 4-4 specify the locations at which the measurements and samples are taken for the REMP required by Section 4.1.1.

Table 4-4. Radiological Environmental Monitoring Locations

Location Number	Descriptive Location	Direction	Distance (miles)	Sample Type(1)
1	River Bank	N	1.1	D
2	River Bank	NNE	0.8	D
3	Discharge Area	NE	0.6	A
3	River Bank	NE	0.7	D
4	River Bank	ENE	0.8	D
5	River Bank	E	1.0	D
6	Plant Wilson	ESE	1.1	D
7	Simulator Building	SE	1.7	D,V,A
8	River Road	SSE	1.1	D
9	River Road	S	1.1	D
10	Met Tower	SSW	0.9	A
10	River Road	SSW	1.1	D
11	River Road	SW	1.2	D
12	River Road	WSW	1.2	D,A
13	River Road	W	1.3	D
14	River Road	WNW	1.8	D
15	Hancock Landing Road	NW	1.5	D,V
16	Hancock Landing Road	NNW	1.4	D,A
17	Savannah River Site, River Road	N	5.4	D
18	Savannah River Site, D Area	NNE	5.0	D
19	Savannah River Site, Road A.13	NE	4.6	D
20	Savannah River Site, Road A.13.1	ENE	4.8	D
21	Savannah River Site, Road A.17	E	5.3	D
22	River Bank Downstream of Buxton Landing	ESE	5.2	D
23	River Road	SE	4.6	D
24	Chance Road	SSE	4.9	D
25	Chance Road near Highway 23	S	5.2	D
26	Highway 23 and Ebenezer Church Rd.	SSW	4.6	D

Table 4-4 (contd). Radiological Environmental Monitoring Locations

Location Number	Descriptive Location	Direction	Distance (miles)	Sample Type(1)
27	Highway 23, opposite Boll Weevil Road	SW	4.7	D
28	Thomas Road	WSW	5.0	D
29	Claxton-Lively Road	W	5.1	D
30	Nathaniel Howard Road	WNW	5.0	D
31	River Road at Allen's Chapel Fork	NW	5.0	D
32	River Bank	NNW	4.7	D
35	Girard	SSE	6.6	D,A
36	GPC Waynesboro Operating Headquarters	WSW	13.9	D,A
37	Substation; Waynesboro, GA	WSW	16.7	D,V
43	Employees Recreation Area	SW	2.2	D
47	Oak Grove Church	SE	10.4	D
48	McBean Cemetery	NW	10.2	D
51	SGA School; Sardis, GA	S	11.0	D
52	Oglethorpe Substation; Alexander, GA	SW	10.7	D
80	Augusta Water Treatment Plant	NNW	29.0	W(2)
81	Savannah River	N	2.5	F(3), S(4)
82	Savannah River (RM 151.2)	NNE	0.8	R
83	Savannah River (RM 150.4)	ENE	0.8	R,S(4)
84	Savannah River (RM 149.5)	ESE	1.6	R
85	Savannah River	ESE	4.3	F(3)
87	Beaufort - Jasper Water Treatment Plant; Beaufort, SC	SE	76.0	W(5)
88	Cherokee Hill Water Treatment Plant; Port Wentworth, GA	SSE	72.0	W(6)
98	W.C. Dixon Dairy	SE	9.8	M
99	Boyceland Dairy	W	20.9	M

Table 4-4 (contd). Radiological Environmental Monitoring Locations

TABLE NOTATIONS

(1) Sample Types:

A - Airborne Radioactivity
D - Direct Radiation
F - Fish
M - Milk
R - River Water
S - River Shoreline Sediment
W - Drinking Water (at water treatment plant)
V - Vegetation

(2) The intake for the Augusta Water Treatment Plant is located on the Augusta Canal. The entrance to this canal is at river mile (RM) 207 on the Savannah River. The canal effectively parallels the river. The intake to the pumping station is about 4 miles down the canal and only 0.1 mile from the river (across land).

(3) About a 5-mile stretch of the river is generally needed to obtain adequate fish samples. Samples are normally gathered between RM 153 and 158 for upriver collections and between RMs 144 and 149.4 for downriver collections.

(4) Sediment is collected at locations with existing or potential recreational value. High water shifting of the river bottom or other reasons could cause a suitable location for sediment collection to become unavailable or unsuitable. Thus, a stretch of river between RM 148.5 and 150.5 is designated for downriver sediment collections, while a stretch between RM 153 and 154 is designated for upriver collections. In practice, collections are normally made at RM 150.2 for downriver collections and at RM 153.3 for upriver collections.

(5) The intake for the Beaufort-Jasper Water Treatment Plant is located at the end of a canal which begins at RM 39.3 on the Savannah River. This intake is about 16 miles by line of sight down the canal from its beginning on the Savannah River.

(6) The intake for the Cherokee Hill Water Treatment Plant is located on Abercorn Creek, which is about one and a quarter creek miles from its mouth on the Savannah River at RM 29.

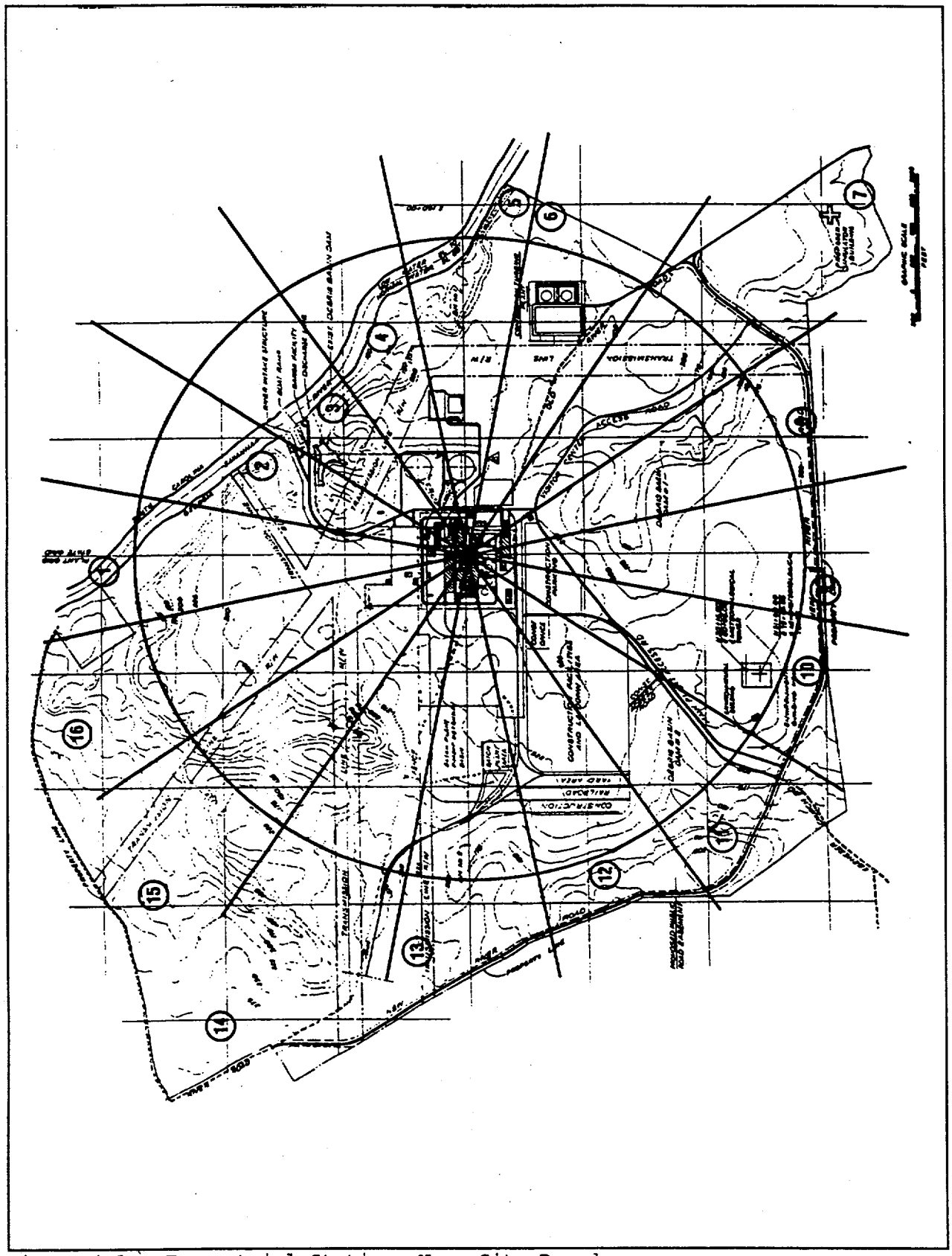

Figure 4-1. Terrestrial Stations Near Site Boundary

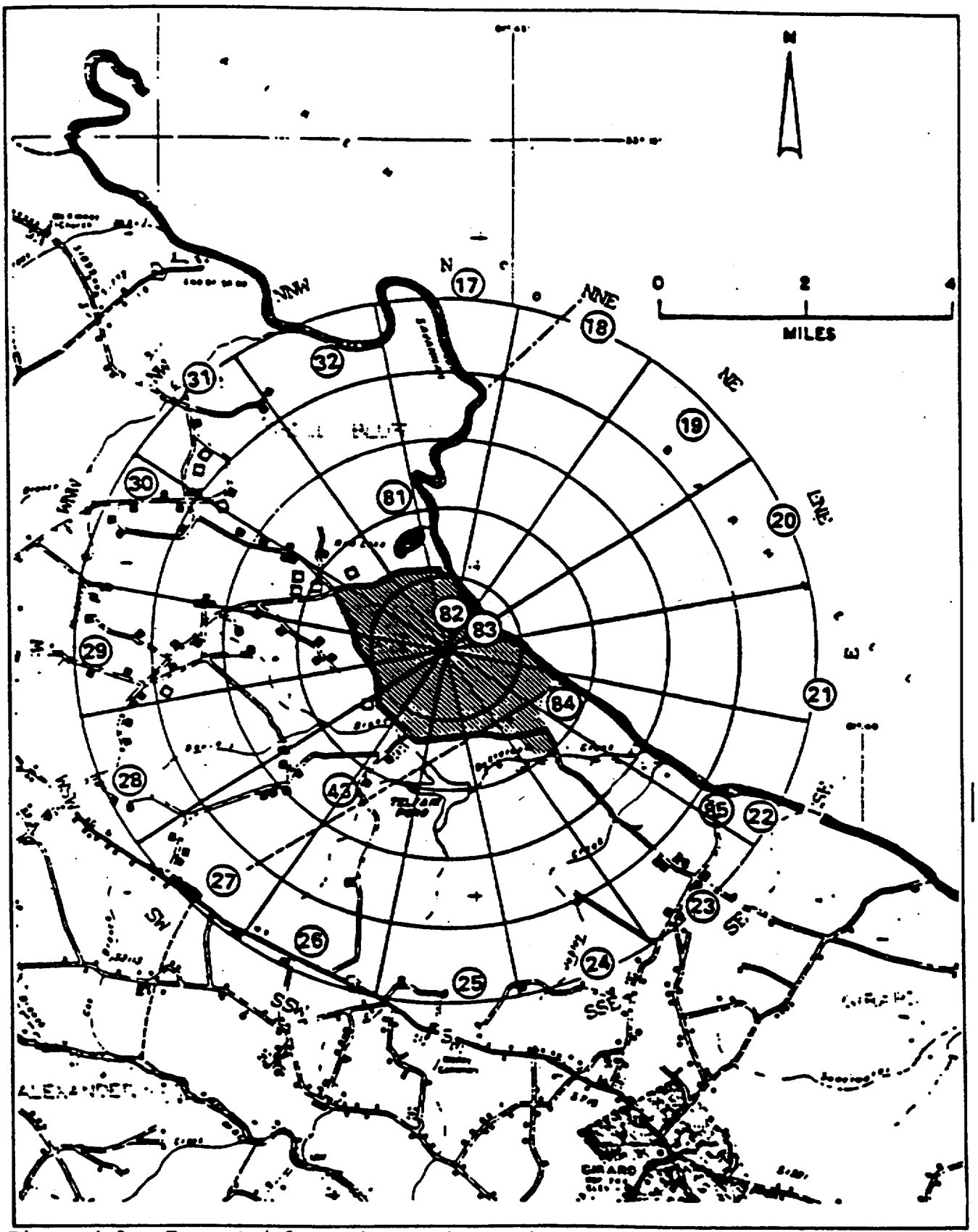

Figure 4-2. Terrestrial Stations and Aquatic Stations, 0-5 Miles

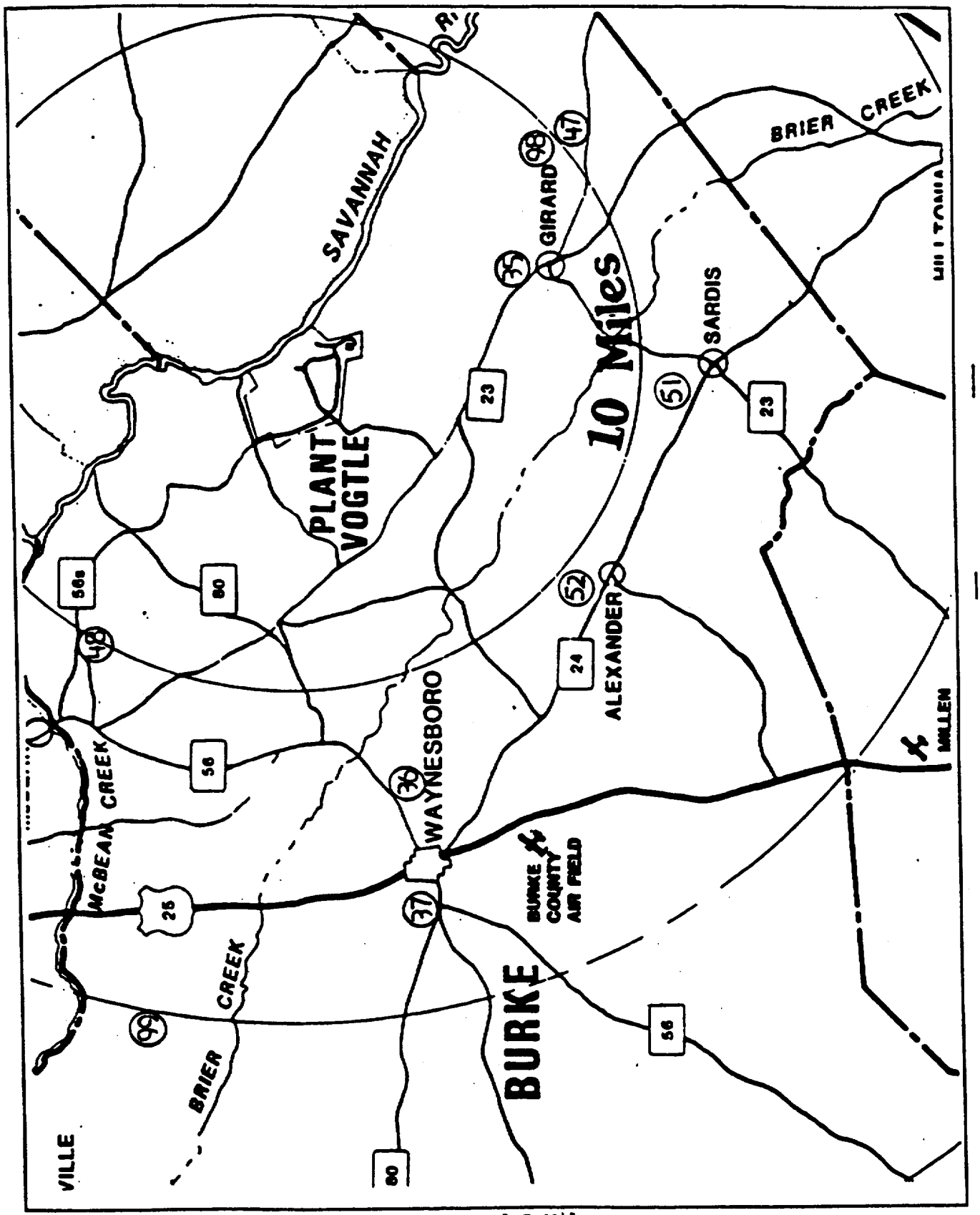

Figure 4-3. Terrestrial Stations Beyond 5 Miles

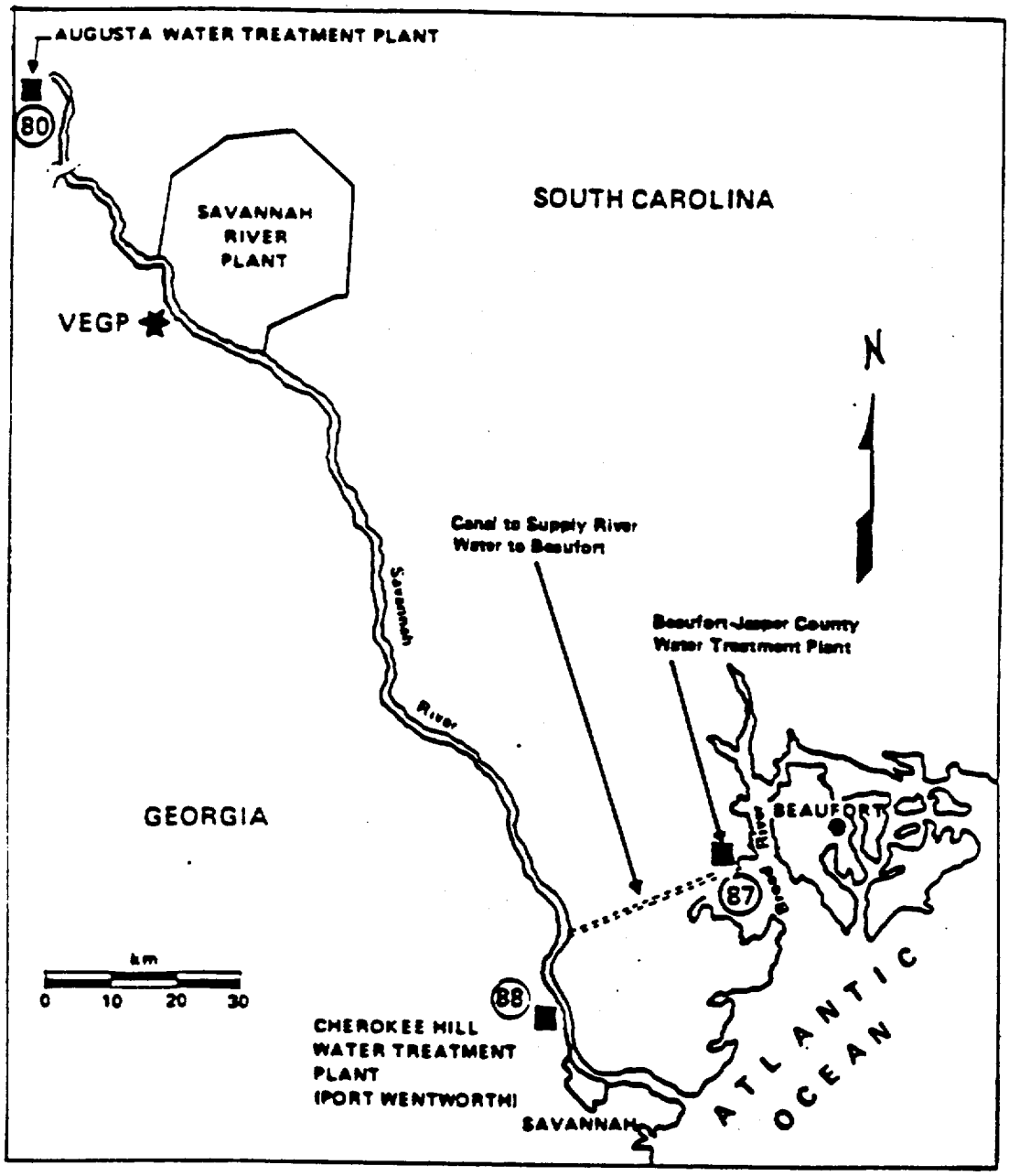

Figure 4-4. Drinking Water Stations

CHAPTER 5
TOTAL DOSE DETERMINATIONS

5.1 LIMIT OF OPERATION

In accordance with Technical Specification 5.5.4.j, the dose or dose commitment to any MEMBER OF THE PUBLIC over a calendar year, due to releases of radioactivity and to radiation from uranium fuel cycle sources, shall be limited to less than or equal to 25 mrem to the total body or any organ, except the thyroid, which shall be limited to less than or equal to 75 mrem.

5.1.1 Applicability

This limit applies at all times.

5.1.2 Actions

With the calculated doses from the release of radioactive materials in liquid or gaseous effluents exceeding twice the limits of Section 2.1.3, 3.1.3, or 3.1.4, calculations shall be made according to Section 5.2 methods to determine whether the limits of Section 5.1 have been exceeded. If these limits have been exceeded, prepare and submit a special report to the Nuclear Regulatory Commission within 30 days, which defines the corrective actions to be taken to reduce subsequent releases to prevent recurrence of exceeding the limits of Section 5.1 and includes the schedule for achieving conformance with the limits of Section 5.1. This special report, as defined in 10 CFR 20.2203, shall also include an analysis which estimates the radiation exposure (dose) to a MEMBER OF THE PUBLIC from uranium fuel cycle sources (including all effluent pathways and direct radiation) for the calendar year that includes the release(s) covered by this report. This special report shall also describe the levels of radiation and concentrations of radioactive material involved, and the cause of the exposure levels or concentrations. If the estimated dose(s) exceeds the limits of Section 5.1, and if the release condition resulting in violation of the provisions of 40 CFR 190 has not already been corrected, the special report shall include a request for variance in accordance with the provisions of 40 CFR 190 and including the specified information of 40 CFR 190.11(b). Submittal of the report is considered a timely request, and a variance is granted until staff action on the request is complete.

This control does not affect shutdown requirements or MODE changes.

5.1.3 Surveillance Requirements

Cumulative dose contributions from liquid and gaseous effluents and from direct radiation shall be determined in accordance with Section 5.2. This requirement is applicable only under the conditions set forth above in Section 5.1.2.

5.1.4 Basis

This control is provided to meet the dose limitations and reporting requirements of 40 CFR 190. The control requires the preparation and submittal of a special report whenever the calculated doses from plant radioactive effluents exceed the limits of Section 5.1. For sites containing up to 4 reactors, it is highly unlikely that the resultant dose to a MEMBER OF THE PUBLIC will exceed the dose limits of 40 CFR 190 if the individual reactors remain within twice the dose design objectives of Appendix I and if direct radiation doses from the units, such as direct exposure from outside storage tanks, are kept small. The special report will describe a course of action which should result in the limitation of dose to a MEMBER OF THE PUBLIC for a calendar year to within the 40 CFR 190 limits. For the purposes of the special report, it may be assumed that the dose commitment to the MEMBER OF THE PUBLIC from other uranium fuel cycle sources is negligible with the exception that dose contributions from other uranium fuel cycle facilities at the same site or within a radius of 5 miles must be considered. If the dose to any MEMBER OF THE PUBLIC is estimated to exceed the requirements of 40 CFR 190, the special report with a request for variance (provided the release conditions resulting in violation of 40 CFR 190 have not already been corrected), in accordance with the provisions of 40 CFR 190.11 and 10 CFR 20.2203(a)(4), is considered to be a timely request and fulfills the requirements of 40 CFR 190 until NRC staff action is completed. The variance only relates to the limits of 40 CFR 190, and does not apply in any way to the requirements for dose limitation as addressed in other sections of this ODCM. An individual is not considered a MEMBER OF THE PUBLIC during any period in which he/she is engaged in carrying out any operation which is part of the nuclear fuel cycle.

5.2 DEMONSTRATION OF COMPLIANCE

There are no other uranium fuel cycle facilities within 5 miles of the plant site. Therefore, for the purpose of demonstrating compliance with the limits of Section 5.1, the total dose to a MEMBER OF THE PUBLIC in the vicinity of the plant site due to uranium fuel cycle sources shall be determined as follows:

$$D_{Tk} = D_L + D_G + D_D + D_N \tag{5.1}$$

where:

D_{Tk} = the total dose or dose commitment to the total body or organ k, in mrem.

D_L = the dose to the same organ due to radioactivity discharged from the plant site in liquid effluents, calculated in accordance with Section 2.4.1, in mrem.

D_G = the dose to the same organ due to non-noble-gas radionuclides discharged from the plant site in gaseous effluents, calculated for the controlling receptor in accordance with Section 3.4.3, in mrem.

D_D = the direct radiation dose to the whole body of an individual at the controlling receptor location, due to radioactive materials retained within the plant site, in mrem. Values of direct radiation dose may be determined by measurement, calculation, or a combination of the two.

D_N = the external whole body dose to an individual at the controlling receptor location, due to gamma ray emissions from noble gas radionuclides discharged from the plant site in gaseous effluents, in mrem. D_N is calculated as follows (equation adapted from Reference 1, page 22, by re-casting in cumulative dose form):

$$D_N = 3.17 \times 10^{-8} \sum_{v} \left\{ (\overline{X/Q})_{vp} \sum_{i} \left[K_i \cdot \tilde{Q}_{iv} \right] \right\} \tag{5.2}$$

where:

3.17×10^{-8} = a units conversion factor: $1\ y/(3.15 \times 10^{7}\ s)$.

$\tilde{Q}_{iv}$ = the cumulative release of noble gas radionuclide i from release pathway v (μCi), during the period of interest.

K_i = the total-body dose factor due to gamma emissions from noble gas radionuclide i (mrem/y)/(μCi/m^3), from Table 3-5.

$(\bar{X}/\bar{Q})_{vp}$ = annual average relative dispersion factor for release pathway v, at the location of the controlling receptor, from Table 3-7 [s/m^3].

As defined above, D_L and D_G are for different age groups, while D_D and D_N are not age group specific. When a more precise determination of D_{Tk} is desired, values of D_L and D_G may be calculated for all four age groups, and those values used in equation (5.1) to determine age group specific values of D_{Tk}; the largest value of D_{Tk} for any age group may then be compared to the limits of Section 5.1.

CHAPTER 6

POTENTIAL DOSES TO MEMBERS OF THE PUBLIC DUE TO THEIR ACTIVITIES INSIDE THE SITE BOUNDARY

6.1 REQUIREMENT FOR CALCULATION

To support the reporting requirements of Section 7.2.2.3, an assessment of the radiation doses from radioactive liquid and gaseous effluents to MEMBERS OF THE PUBLIC due to their activities inside the SITE BOUNDARY shall be performed as specified in Section 6.2, at least once per calendar year.

6.2 CALCULATIONAL METHOD

For the purpose of performing the calculations required in Section 6.1, the dose to a member of the public inside the SITE BOUNDARY shall be determined at the locations, and for the receptor age groups, defined in Table 6-1. The dose to such a receptor at any one of the defined locations shall be determined as follows:

$$D_{Ik} = \left[D_A + D_S + D_P \right] \cdot F_O \qquad (6.1)$$

where:

D_{Ik} = the total dose to the total body or organ k, in mrem.

D_A = the dose to the same organ due to <u>inhalation</u> of non-noble-gas radionuclides discharged from the plant site in gaseous effluents, calculated in accordance with Section 3.4.3, in mrem. The $(\bar{X}/\bar{Q})$ value to be used is given for each receptor location in Table 6-1; depleted $(\bar{X}/\bar{Q})$ values may be used in calculations for non-noble-gas radionuclides.

D_S = the dose to the same organ due to <u>ground plane deposition</u> of non-noble-gas radionuclides discharged from the plant site in gaseous effluents, calculated in accordance with Section 3.4.3, in mrem. The $(\bar{D}/\bar{Q})$ value to be used is given for each receptor location in Table 6-1.

D_P = the external whole body dose due to gamma ray emissions from noble gas radionuclides discharged from the plant site in gaseous effluents, calculated using equation (5.2), in mrem. The $(\bar{X}/\bar{Q})$ values that are to be used are given for each receptor location in Table 6-1.

F_O = the occupancy factor for the given location, which is the fraction of the year that one individual MEMBER OF THE PUBLIC is assumed to be present at the receptor location [unitless]. Values of F_O for each receptor location are included in Table 6-1.

Table 6-1. Attributes of Member of the Public Receptor Locations Inside the Site Boundary

Location: Visitors Center, SE at 447 meters

Age Group: Child

Occupancy Factor: 4.57×10^{-4} (based on 4 hours per year)

Dispersion and Deposition Parameters:

Parameter	Ground-Level	Mixed-Mode
Undepleted $(\bar{X}/\bar{Q})$, s/m^3	5.93 E-6	7.12 E-7
Depleted $(\bar{X}/\bar{Q})$, s/m^3	5.58 E-6	6.74 E-7
$(\bar{D}/\bar{Q})$, m^{-2}	2.28 E-8	5.77 E-9

CHAPTER 7
REPORTS

7.1 ANNUAL RADIOLOGICAL ENVIRONMENTAL OPERATING REPORT

7.1.1 Requirement for Report

In accordance with Technical Specification 5.6.2, the Annual Radiological Environmental Operating Report covering the REMP activities during the previous calendar year shall be submitted before May 15 of each year. (A single report fulfills the requirements for both units.) The material provided shall be consistent with the objectives outlined in section 4.1 and section 7.1.2 of the ODCM, and in Sections IV.B.2, IV.B.3, and IV.C of Appendix I to 10 CFR Part 50.

7.1.2 Report Contents

The materials specified in the following sub-sections shall be included in each Annual Radiological Environmental Operating Report:

7.1.2.1 Data

The report shall include summarized and tabulated results of all REMP samples required by Table 4-1 taken during the report period, in a format similar to that contained in Table 3 of the Radiological Assessment Branch Technical Position (Reference 19); the results for any additional samples shall also be reported. In the event that some results are not available for inclusion with the report, the report shall be submitted noting and explaining the reasons for the missing results; the missing data shall be submitted as soon as possible in a supplementary report. The results for naturally-occurring radionuclides not included in plant effluents need not be reported.

7.1.2.2 Evaluations

Interpretations and analyses of trends of the results shall be included in the report, including the following: (as appropriate) comparisons with pre-operational studies, operational controls, and previous environmental reports; and an assessment of any observed impacts of the plant operation on the environment. If the measured level of radioactivity in an environmental sampling medium exceeding the reporting levels of Table 4-2 is not the result of plant effluents, the condition shall be described as required by Section 4.1.1.2.2.

7.1.2.3 Programmatic Information

Also to be included in each report are the following: a summary description of the REMP; a map(s) of all sampling locations keyed to a table giving distances and directions from a point midway between the centers of the two reactors; the results of land use censuses required by Section 4.1.2; and the results of licensee participation in the Interlaboratory Comparison Program required by Section 4.1.3.

7.1.2.4 Descriptions of Program Deviations

Discussions of deviations from the established program must be included in each report, as follows:

7.1.2.4.1 If the REMP is not conducted as required in Table 4-1, a description of the reasons for not conducting the program as required, and the plans for preventing a recurrence, must be included in the report.

7.1.2.4.2 If the MDCs required by Table 4-3 are not achieved, the contributing factors must be identified and described in the report.

7.1.2.4.3 If Interlaboratory Comparison Program analyses are not performed as required by Section 4.1.3, the corrective actions taken to prevent a recurrence must be included in the report.

7.2 RADIOACTIVE EFFLUENT RELEASE REPORT

7.2.1 Requirement for Report

In accordance with Technical Specification 5.6.3, the Radioactive Effluent Release Report covering the operation of the units during the previous calendar year of operation shall be submitted in accordance with 10 CFR Part 50.36a. (A single submittal may be made for Units 1 and 2. However, the submittal shall specify the releases of radioactive material in liquid and gaseous effluents from each unit and solid radioactive waste from the site.) The report shall include a summary of the quantities of radioactive liquid and gaseous effluents and solid waste released from the units. The material provided shall be consistent with the objectives outlined throughout this ODCM and the Process Control Program (PCP) and in conformance with 10 CFR Part 50.36a and Section IV.B.1 of Appendix I to 10 CFR Part 50.

7.2.2 Report Contents

The materials specified in the following sub-sections shall be included in each Radioactive Effluent Release Report:

7.2.2.1 Quantities of Radioactive Materials Released

The report shall include a summary of the quantities of radioactive liquid and gaseous effluents and solid waste released from the units as outlined in NRC Regulatory Guide 1.21, "Measuring, Evaluating, and Reporting Radioactivity in Solid Wastes and Releases of Radioactive Materials in Liquid and Gaseous Effluents from Light-Water-Cooled Nuclear Power Plants," Revision 1, June 1974, with liquid and gaseous effluent data summarized on a quarterly basis and solid radioactive waste data summarized on a semiannual basis following the format of Appendix B thereof. Unplanned releases of radioactive materials in gaseous and liquid effluents from the site to UNRESTRICTED AREAS shall be included in the report, tabulated either by quarter or by event. For gamma emitters released in liquid and gaseous effluents, in addition to the principal gamma emitters for which MDCs are specifically established in Table 2-3 and Table 3-3, other peaks which are measurable and identifiable also shall be identified and reported.

7.2.2.2 Meteorological Data

The report shall include an annual summary of hourly meteorological data collected over the previous year. This annual summary may be either in the form of an hour-by-hour listing of wind speed, wind direction, and atmospheric stability, and precipitation (if measured) on magnetic tape; or in the form of

joint frequency distributions of wind speed, wind direction, and atmospheric stability. In lieu of submission with the Radioactive Effluent Release Report, the licensee has the option of retaining this summary of required meteorological data on site in a file that shall be provided to the NRC upon request.

7.2.2.3 Dose Assessments

The report shall include an assessment of the radiation doses due to the radioactive liquid and gaseous effluents released from each unit during the previous calendar year. Historical annual average meteorology or the meteorological conditions concurrent with the time of release of radioactive materials in gaseous effluents (as determined by sampling frequency and measurement) shall be used for determining the gaseous pathway doses. This assessment of radiation doses shall be performed in accordance with Sections 2.1.3, 2.4, 3.1.3, 3.1.4, 3.4.2, 3.4.3, 5.1, and 5.2.

If a determination is required by Section 5.1.2, the report shall also include an assessment of radiation doses to the likely most exposed MEMBER OF THE PUBLIC from reactor releases and other nearby uranium fuel cycle sources (including doses from primary effluent pathways and direct radiation) for the previous calendar year to show conformance with 40 CFR 190, Environmental Radiation Protection Standards for Nuclear Power Operation; this dose assessment must be performed in accordance with Chapter 5. The report shall also include an assessment of the radiation doses from radioactive liquid and gaseous effluents to MEMBERS OF THE PUBLIC due to their activities inside the SITE BOUNDARY during the report period; this assessment must be performed in accordance with Chapter 6. All assumptions used in making these assessments (i.e., specific activity, exposure time, and location) shall be included in the report.

7.2.2.4 Solid Radwaste Data

For each type of solid waste shipped offsite during the report period, the following information shall be included:

a. Waste volume,
b. Total curie quantity (specify whether determined by measurement of estimate),
c. Principal radionuclides (specify whether determined by measurement or estimate),
d. Type of waste (e.g., spent resin, compacted dry waste, evaporator bottoms),

e. Type of container (e.g., LSA, Type A, Type B, Large Quantity),
f. Solidification agent (e.g., cement, urea formaldehyde) and
g. Class of solid wastes (as defined by 10 CFR Part 61.)

7.2.2.5 Licensee Initiated Document Changes

Licensee initiated changes shall be submitted to the Nuclear Regulatory Commission as a part of or concurrent with the Radioactive Effluent Release Report for the period in which any changes were made. Such changes to the ODCM shall be submitted pursuant to Technical Specification 5.5.1. This requirement includes:

7.2.2.5.1 Any changes to the sampling locations in the radiological environmental monitoring program, including any changes made pursuant to Section 4.1.1.2.3. Documentation of changes made pursuant to Section 4.1.1.2.3 shall include supporting information identifying the cause of the unavailability of samples.

7.2.2.5.2 Any changes to dose calculation locations or pathways, including any changes made pursuant to Section 4.1.2.2.2.

7.2.2.6 Descriptions of Program Deviations

Discussions of deviations from the established program shall be included in each report, as follows:

7.2.2.6.1 The report shall include deviations from the liquid and gaseous effluent monitoring instrumentation operability requirements included in Sections 2.1.1 and 3.1.1, respectively. The report shall include an explanation as to why the inoperability of the liquid or gaseous effluent monitoring instrumentation was not corrected within the specified time requirement.

7.2.2.6.2 The report shall include a description of the events leading to liquid holdup tanks or gas storage tanks exceeding the limits of Technical Specification 5.5.12.

7.2.2.7 Major Changes to Radioactive Waste Treatment Systems

As required by Sections 2.1.5 and 3.1.6, licensee initiated MAJOR CHANGES TO RADIOACTIVE WASTE TREATMENT SYSTEMS (liquid and gaseous) shall be reported to the Nuclear Regulatory Commission in the Radioactive Effluent Release Report covering

covering the period in which the change was reviewed and accepted for implementation.[1] The discussion of each change shall contain:

a. A summary of the evaluation that led to the determination that the change could be made in accordance with 10 CFR 50.59;

b. Sufficient detailed information to totally support the reason for the change without benefit of additional supplemental information;

c. A detailed description of the equipment, components, and processes involved and the interfaces with other plant systems;

d. An evaluation of the change which shows the predicted releases of radioactive materials in liquid and gaseous effluents that differ from those previously predicted in the license applications and amendments thereto;

e. An evaluation of the change which shows the expected maximum exposures to individuals in the UNRESTRICTED AREA and to the general population that differ from those previously estimated in the license applications and amendments thereto;

f. A comparison of the predicted releases of radioactive materials, in liquid and gaseous effluents, to the actual releases for the period prior to when the changes are to be made;

g. An estimate of the exposure to plant operating personnel as a result of the change; and

h. Documentation of the fact that the change was reviewed and found acceptable by the PRB.

1 In lieu of inclusion in the Radioactive Effluents Release Report, this same information may be submitted as part of the annual FSAR update.

7.3 MONTHLY OPERATING REPORT

This ODCM establishes no requirements pertaining to the Monthly Operating Report.

7.4 SPECIAL REPORTS

Special reports shall be submitted to the Nuclear Regulatory Commission as required by Sections 2.1.3.2, 2.1.4.2, 3.1.3.2, 3.1.4.2, 3.1.5.2, 4.1.1.2.2, and 5.1.2.

CHAPTER 8
METEOROLOGICAL MODELS

The models presented in this chapter are those which were used to compute the specific values of meteorology-related parameters that are referenced throughout this ODCM. These models should also be used whenever it is necessary to calculate values of these parameters for new locations of interest.

Note: Although Plant Vogtle has no pure elevated releases, the sections on elevated-mode calculations (8.1.2 and 8.2.2) are included for convenience in calculating mixed-mode values, and to preserve section number compatibility with the ODCMs of the other Southern Company nuclear power plants.

8.1 ATMOSPHERIC DISPERSION

Atmospheric dispersion may be calculated using the appropriate form of the sector-averaged Gaussian model. Gaseous release elevations may be considered to be either at ground-level, elevated, or mixed-mode. Facility release elevations for each gaseous release point are as indicated in Table 3-4.

8.1.1 Ground-Level Releases

Relative concentration calculations for ground-level releases, or for the ground-level portion of mixed-mode releases, shall be made as follows:

$$(X/Q)_G = \frac{2.032 \ \delta \ K_r}{N \ r} \sum_{jk} \left[\frac{n_{jk}}{u_j \ \Sigma_{zk}} \right] \qquad (8.1)$$

where:

$(X/Q)_G$ = the ground-level sector-averaged relative concentration for a given wind direction (sector) and distance (s/m^3).

2.032 = $(2/\pi)^{1/2}$ divided by the width in radians of a 22.5° sector, which is 0.3927 radians.

δ = the plume depletion factor for all radionuclides other than noble gases at a distance r shown in Figure 8-3. For noble gases, the depletion factor is unity. If an undepleted relative concentration

is desired, the depletion factor is unity. Only depletion by deposition is considered since depletion by radioactive decay would be of little significance at the distances considered.

K_T = the terrain recirculation factor corresponding to a distance r, taken from Appendix A of Reference 15.

n_{jk} = the number of hours that wind of wind speed class j is directed into the given sector during the time atmospheric stability category k existed.

N = the total hours of valid meteorological data recorded throughout the period of interest for all sectors, wind speed classes, and stability categories.

u_j = the wind speed (mid-point of wind speed class j) at ground level (m/s).

r = the distance from release point to location of interest (m).

Σ_{zk} = the vertical standard deviation of the plume concentration distribution considering the initial dispersion within the building wake, calculated as follows:

$$\Sigma_{zk} = \textit{the lesser of:} \begin{cases} \left(\sigma_{zk}^2 + \frac{b^2}{2\pi}\right)^{1/2} \\ \quad OR \\ \sqrt{3}\,(\sigma_{zk}) \end{cases} \qquad (8.2)$$

σ_{zk} = the vertical standard deviation of the plume concentration distribution (m) for a given distance and stability category k as shown in Figure 8-1. The stability category is determined by the vertical temperature gradient $\Delta T/\Delta z$ (°C/100 m).

π = 3.1416

b = the maximum height of adjacent plant structure (55 m).

8.1.2 Elevated Releases

Relative dispersion calculations for elevated releases, or for the elevated portion of mixed-mode releases, shall be made as follows:

$$(X/Q)_E = \frac{2.032\ K_r}{N\ r} \sum_{jk} \left[\frac{\delta_k\ n_{jk}\ \exp\left(\frac{-h^2}{2\,\sigma_{zk}^2}\right)}{u_j\ \sigma_{zk}} \right] \qquad (8.3)$$

where:

$(X/Q)_E$ = the elevated release sector-averaged relative concentration for a given wind direction (sector) and distance (s/m^3).

δ_k = the plume depletion factor for all radionuclides other than noble gases at a distance r for elevated releases, as shown in Figure 8-4, Figure 8-5, and Figure 8-6. For an elevated release, this factor is stability dependent. For noble gases, the depletion factor is unity. If an undepleted relative concentration is desired, the depletion factor is unity. Only depletion by deposition is considered since depletion by radioactive decay would be of little significance at the distances considered.

n_{jk} = the number of hours that wind of wind speed class j is directed into the given sector during the time atmospheric stability category k existed.

u_j = the wind speed (mid-point of wind speed class j) at the effective release height h (m/s).

h = the effective height of the release (m), which is calculated as follows:

$$h = h_v + h_{pr} - h_t - c_v \qquad (8.4)$$

h_v = the height of the release point (m).

h_t = the maximum terrain height between the release point and the point of interest (m), from Table 8-1.

h_{pr} = the additional height due to plume rise (m) which is calculated as follows and limited by $h_{pr(max)}$:

$$h_{pr} = 1.44\, d \left(\frac{W_o}{u}\right)^{\frac{2}{3}} \cdot \left(\frac{x}{d}\right)^{\frac{1}{3}} \tag{8.5}$$

$$h_{pr}(\max) = \textit{the lesser of:} \begin{cases} 3\left(\frac{W_o}{u}\right) \cdot d \\ \textit{OR} \\ 1.5\left(\frac{F_m}{u}\right)^{\frac{1}{3}} \cdot s^{-\frac{1}{6}} \end{cases} \tag{8.6}$$

d = the inside diameter of the vent (m).

c_v = the correction for low vent exit velocity (m), which is calculated as follows:

$$c_v = \begin{cases} 3\left(1.5 - \frac{W_o}{u}\right) \cdot d & \textit{for } \frac{W_o}{u} < 1.5 \\ \textit{OR} & \\ 0 & \textit{for } \frac{W_o}{u} \geq 1.5 \end{cases} \tag{8.7}$$

F_m = the momentum flux parameter (m^4/s^2), which is calculated as follows:

$$F_m = \left(W_o \cdot \frac{d}{2}\right)^2 \tag{8.8}$$

S = the stability parameter:

= $8.75 \times 10^{-4}\ s^{-2}$ for $-0.5 < \Delta T \leq 1.5$

$= \quad 1.75 \times 10^{-3}\ s^{-2}$ for $1.5 < \Delta T \leq 4.0$

$= \quad 2.45 \times 10^{-3}\ s^{-2}$ for $\Delta T > 4.0$

All other symbols are as previously defined in Section 8.1.1.

8.1.3 Mixed-Mode Releases

Relative dispersion calculations for mixed-mode releases shall be made as follows:

$$(X/Q)_M = (1-E) \cdot (X/Q)_E + E \cdot (X/Q)_G \qquad (8.9)$$

where:

$(X/Q)_M$ = the mixed-mode release sector-averaged relative concentration for a given wind direction (sector) and distance (s/m^3).

E = the fraction of hours during which releases are considered as ground-level releases, calculated as follows:

$$E = \begin{cases} 1.0 & \text{for } \frac{W_o}{u_j} \leq 1.0 \\ 2.58 - 1.58 \cdot \left(\frac{W_o}{u_j}\right) & \text{for } 1.0 < \frac{W_o}{u_j} \leq 1.5 \\ 0.3 - 0.06 \cdot \left(\frac{W_o}{u_j}\right) & \text{for } 1.5 < \frac{W_o}{u_j} \leq 5.0 \\ 0 & \text{for } \frac{W_o}{u_j} > 5.0 \end{cases} \qquad (8.10)$$

All other symbols are as previously defined.

8.2 RELATIVE DEPOSITION

Plume depletion may be calculated using the appropriate form of the sector-averaged Gaussian model. Gaseous release elevations may be considered to be either at ground-level, elevated, or mixed-mode. Facility release elevations for each gaseous release points are as indicated in Table 3-4.

8.2.1 Ground-Level Releases

Relative deposition calculations for ground-level releases, or for the ground-level portion of mixed-mode releases, shall be made as follows:

$$(D/Q)_G = \frac{2.55 \; D_g \; K_r}{N \; r} \sum_k n_k \qquad (8.11)$$

where:

$(D/Q)_G$ = the ground-level sector-averaged relative deposition for a given wind direction (sector) and distance (m^{-2}).

2.55 = the inverse of the number of radians in a 22.5° sector [= $(2\ \pi/16)^{-1}$].

D_g = the deposition rate at distance r, taken from Figure 8-7 for ground-level releases (m^{-1}).

n_k = the number of hours in which the wind is directed into the sector of interest, and during which stability category k exists.

All other symbols are as defined previously in Section 8.1.

8.2.2 Elevated Releases

Relative deposition calculations for elevated releases, or for the elevated portion of mixed-mode releases, shall be made as follows:

$$(D/Q)_E = \frac{2.55 \; K_r}{N \; r} \sum_k (n_k \; D_{ek}) \qquad (8.12)$$

where:

$(D/Q)_E$ = the elevated-plume sector-averaged relative deposition for a given wind direction (sector) and distance (m^{-2}).

D_{ek} = the elevated plume deposition rate at distance r, taken from Figure 8-8, Figure 8-9, or Figure 8-10, as appropriate to the plume effective release height h defined in Section 8.1.2, for stability class k (m^{-1}).

All other symbols are as defined previously.

8.2.3 Mixed-Mode Releases

Relative deposition calculations for mixed-mode releases shall be made as follows:

$$(D/Q)_M = (1-E) \cdot (D/Q)_E + E \cdot (D/Q)_G \qquad (8.13)$$

where:

$(D/Q)_M$ = the mixed-mode release sector-averaged relative deposition for a given wind direction (sector) and distance (m^{-2}).

E = the fraction of hours during which releases are considered as ground-level releases, defined in Section 8.1.3.

All other symbols are as previously defined.

8.3 ELEVATED PLUME DOSE FACTORS

These factors are not required in effluent dose calculations for VEGP.

Table 8-1. Terrain Elevation Above Plant Site Grade

Dist. (m)	N	NNE	NE	ENE	E	ESE	SE	SSE	S	SSW	SW	WSW	W	WNW	NW	NNW
500	0.0	0.0	0.0	0.0	0.0	0.0	0.0	0.0	0.0	4.7	8.7	5.7	1.4	5.8	5.7	3.5
1,000	0.0	0.0	0.0	0.0	0.0	0.0	0.0	0.0	0.0	4.7	16.7	13.4	3.3	10.4	11.8	6.8
1,500	0.0	0.0	0.0	0.0	0.0	0.0	0.0	0.0	0.0	4.7	21.7	18.6	7.3	12.2	14.3	7.3
2,000	0.0	0.0	0.0	0.0	0.0	0.0	0.0	0.0	0.0	4.7	21.7	18.6	7.3	12.2	14.3	7.3
2,500	0.0	0.0	0.0	0.0	0.0	0.0	0.0	0.0	0.0	4.7	21.7	18.6	7.3	12.2	14.3	7.3
3,000	0.0	0.0	0.0	0.0	0.0	0.0	0.0	0.0	0.0	4.7	23.7	18.6	7.3	12.2	14.3	7.3
3,500	0.0	0.0	0.0	0.0	0.0	0.0	0.0	0.0	0.0	4.7	24.4	18.6	7.3	12.2	16.9	7.3
4,000	0.0	0.0	0.0	0.0	0.0	0.0	4.5	0.0	0.0	4.7	24.4	18.6	7.3	12.2	16.9	7.3
5,000	0.0	0.0	0.0	0.0	0.0	0.0	11.1	0.0	0.0	4.7	24.7	18.6	7.3	12.2	16.9	7.3
6,000	0.0	0.0	0.0	0.0	0.0	0.0	11.1	0.0	0.0	4.7	26.8	18.6	7.3	12.2	16.9	7.3
7,000	0.0	0.0	0.0	7.8	0.0	0.0	11.1	0.0	3.6	4.7	26.8	18.6	7.3	12.2	16.9	7.3
8,000	0.0	0.0	21.1	13.9	0.0	0.0	11.8	0.0	14.6	4.7	26.8	18.6	7.3	12.2	16.9	7.3
9,000	0.0	0.0	24.4	14.6	0.0	0.0	12.7	7.1	14.6	5.1	26.8	18.6	7.3	12.2	16.9	7.3
10,000	0.0	10.2	24.4	20.2	0.0	0.0	17.1	17.0	14.6	6.8	26.8	18.6	7.3	12.2	16.9	7.3
12,000	0.0	15.9	26.8	20.2	0.0	0.0	17.1	19.5	14.6	6.8	34.1	28.9	13.4	12.2	16.9	7.3
14,000	0.0	15.9	26.8	20.2	0.0	0.0	17.1	19.5	14.6	6.8	34.1	28.9	13.4	16.5	19.7	7.3
16,000	0.0	15.9	26.8	21.7	13.2	0.0	17.1	19.5	14.6	6.8	34.1	28.9	13.4	16.5	25.7	7.3

Data in this table are obtained from Reference 11.

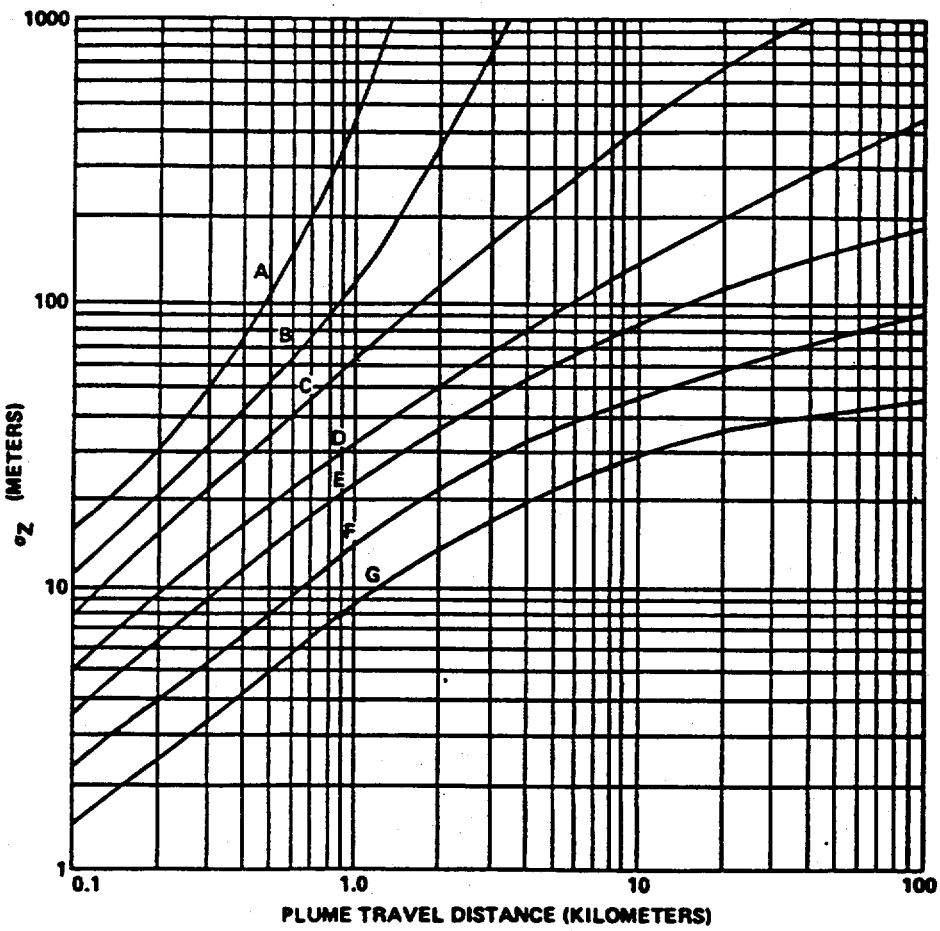

Category	Range of Vertical Temperature Gradient (°C/100 m)	Range of Vertical Temperature Gradient (°F/100 ft)
A	$\Delta T/\Delta Z < -1.9$	$\Delta T/\Delta Z < -1.0$
B	$-1.9 \leq \Delta T/\Delta Z < -1.7$	$-1.0 \leq \Delta T/\Delta Z < -0.9$
C	$-1.7 \leq \Delta T/\Delta Z < -1.5$	$-0.9 \leq \Delta T/\Delta Z < -0.8$
D	$-1.5 \leq \Delta T/\Delta Z < -0.5$	$-0.8 \leq \Delta T/\Delta Z < -0.3$
E	$-0.5 \leq \Delta T/\Delta Z < 1.5$	$-0.3 \leq \Delta T/\Delta Z < 0.8$
F	$1.5 \leq \Delta T/\Delta Z < 4.0$	$0.8 \leq \Delta T/\Delta Z < 2.2$
G	$4.0 \leq \Delta T/\Delta Z$	$2.2 \leq \Delta T/\Delta Z$

This graph is reproduced from Reference 5 (Figure 1).

Figure 8-1. Vertical Standard Deviation of Material in a Plume (σ_Z)

This figure intentionally left blank.

Refer to the definition for K_T (terrain recirculation factor) in section 8.1.1 for applicable plant data.

Figure 8-2. Terrain Recirculation Factor (K_T)

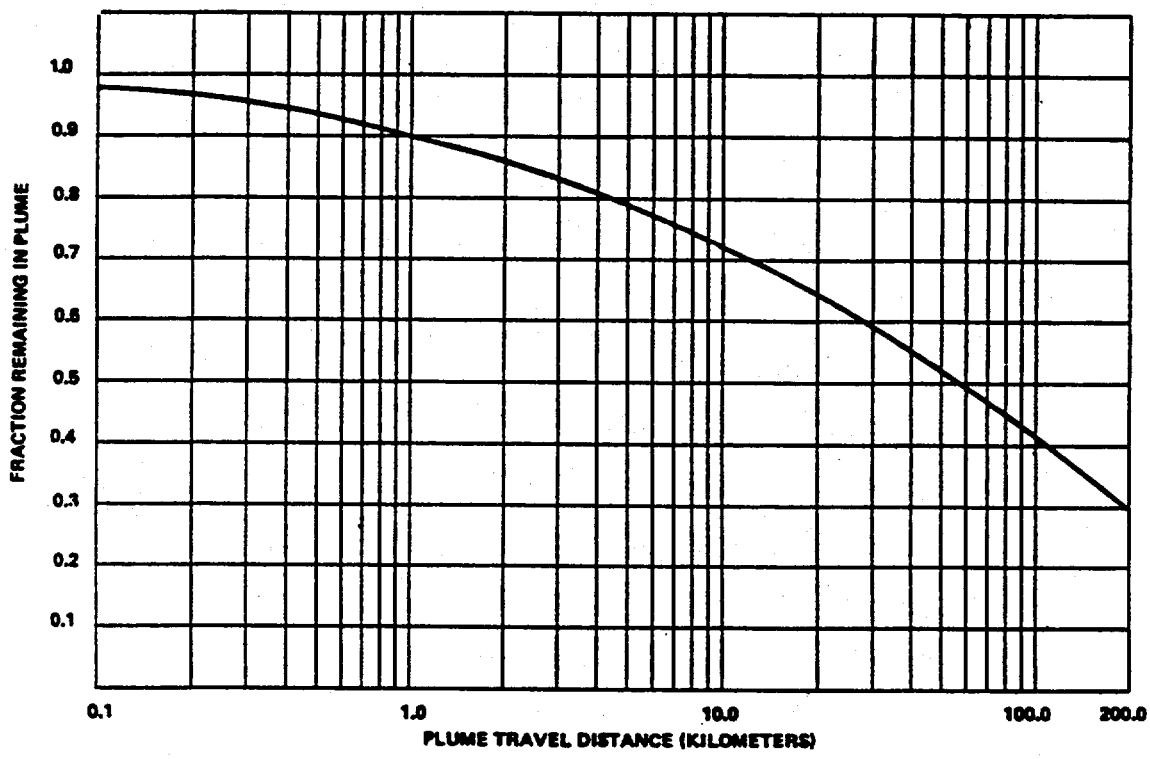

This graph is reproduced from Reference 5 (Figure 2).

Figure 8-3. Plume Depletion Effect for Ground Level Releases

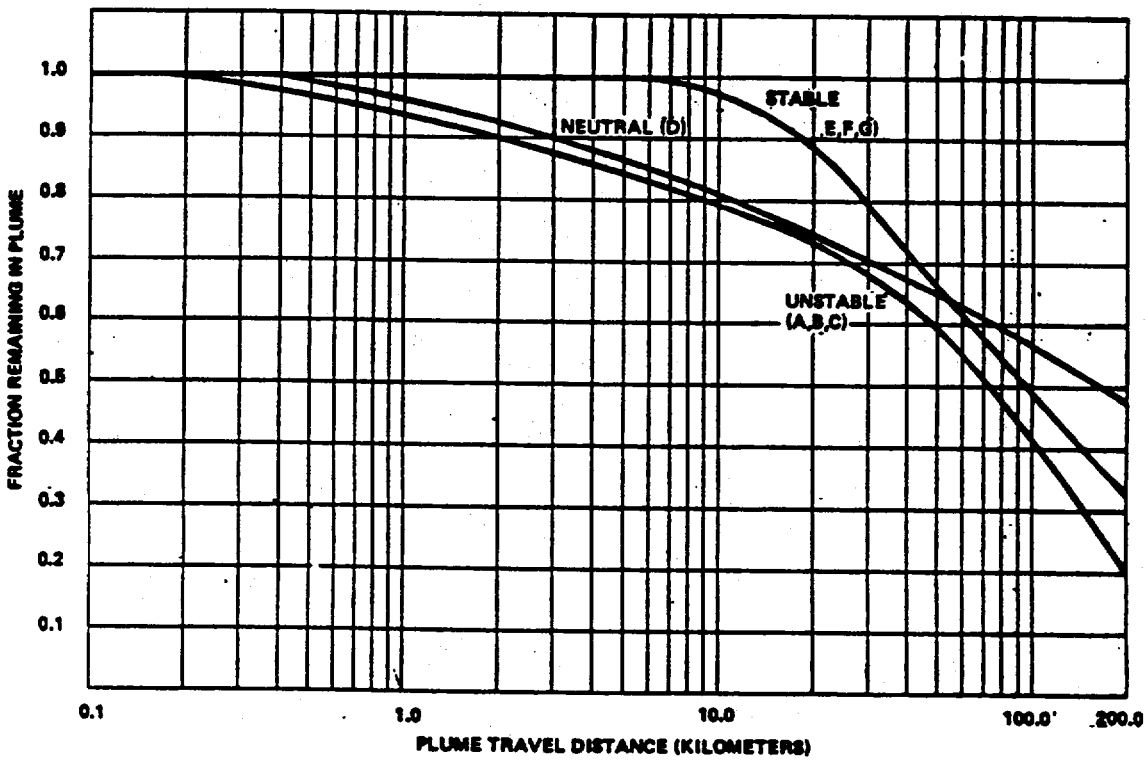

This graph is reproduced from Reference 5 (Figure 3).

Figure 8-4. Plume Depletion Effect for 30-Meter Releases

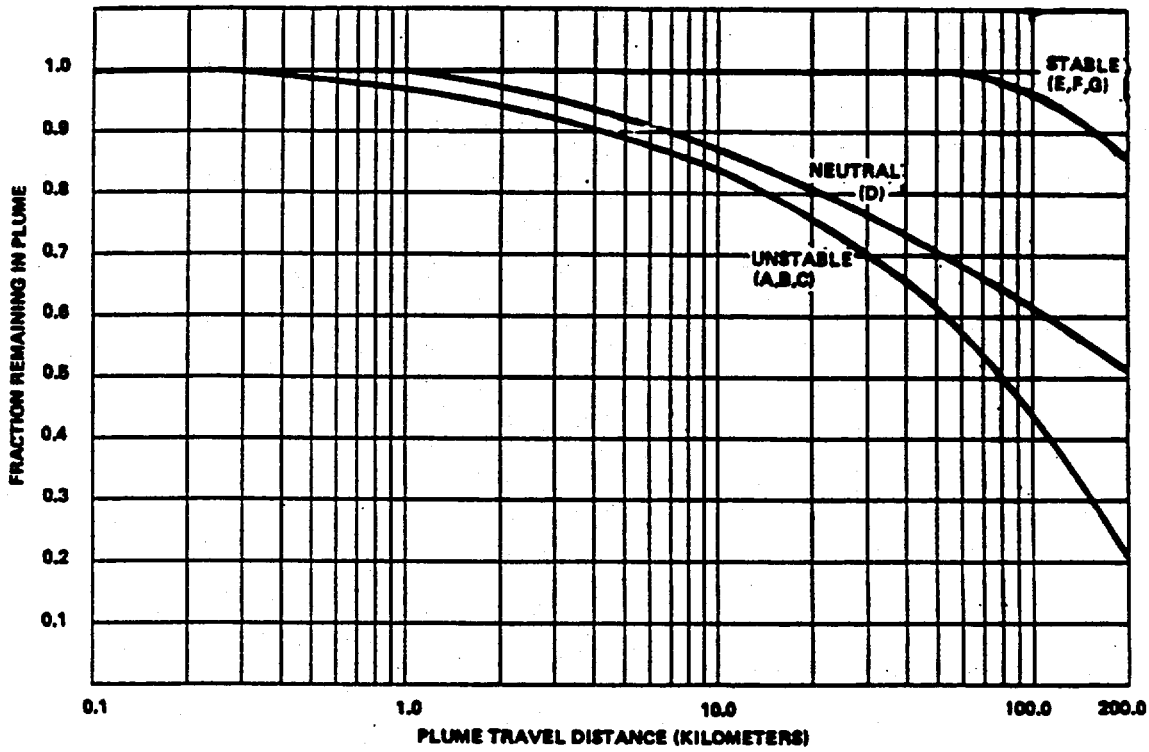

This graph is reproduced from Reference 5 (Figure 4).

Figure 8-5. Plume Depletion Effect for 60-Meter Releases

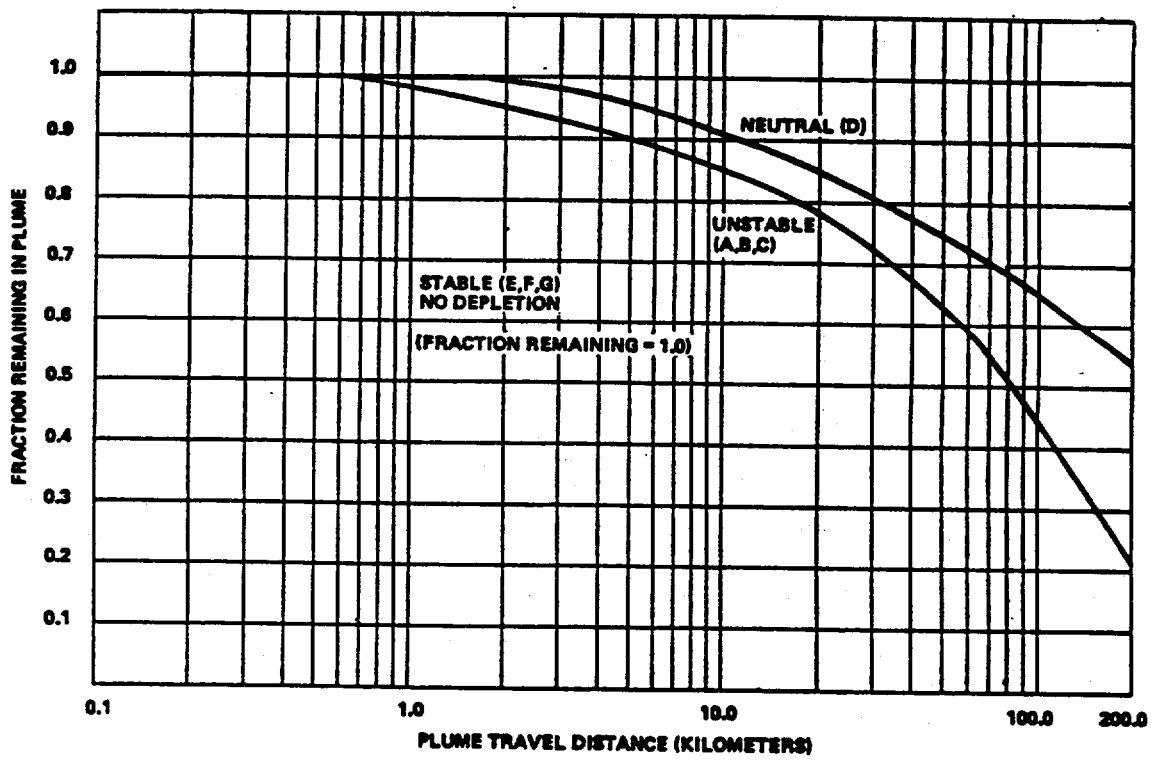

This graph is reproduced from Reference 5 (Figure 5).

Figure 8-6. Plume Depletion Effect for 100-Meter Releases

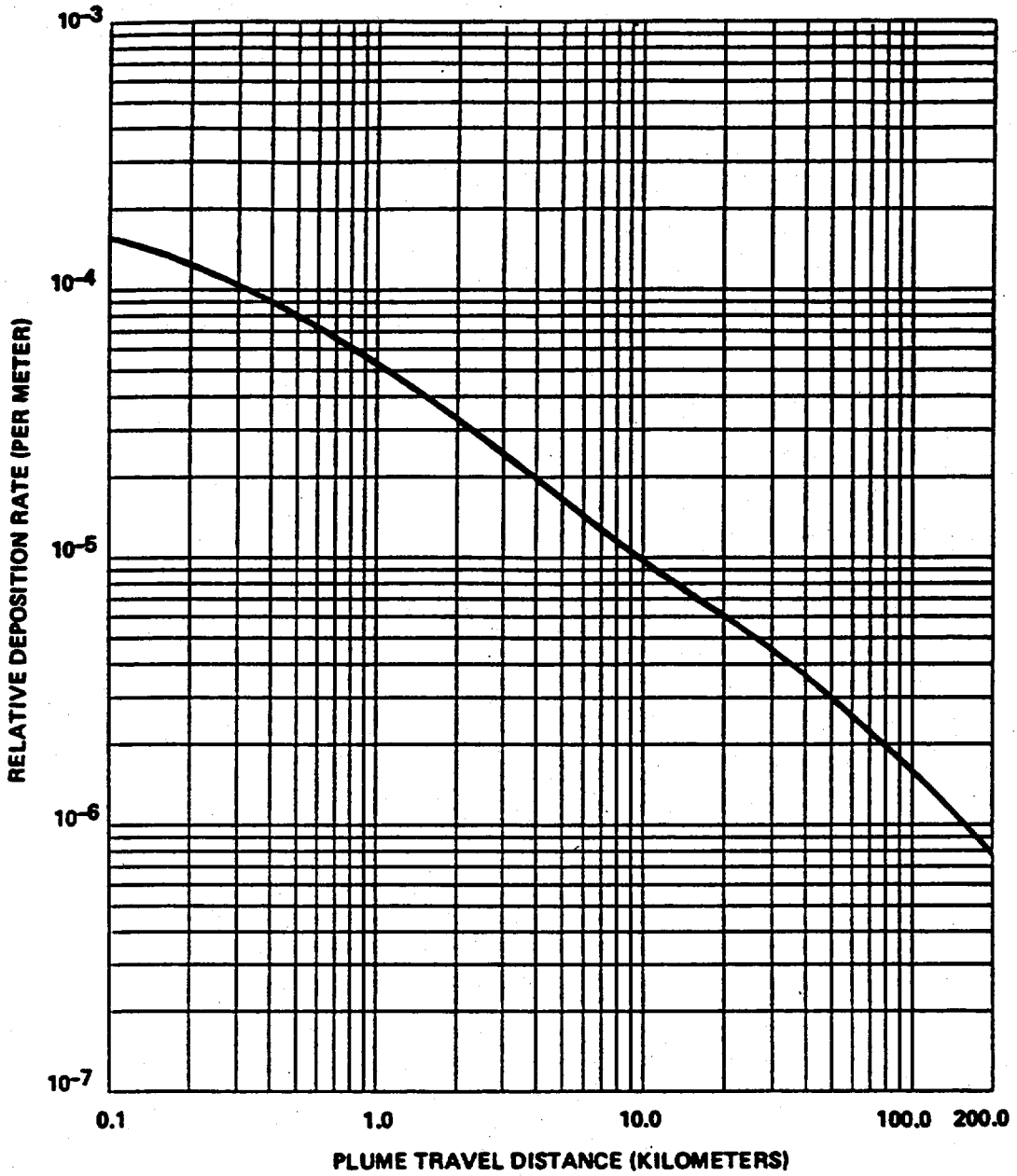

This graph is reproduced from Reference 5 (Figure 6).

Figure 8-7. Relative Deposition for Ground-Level Releases

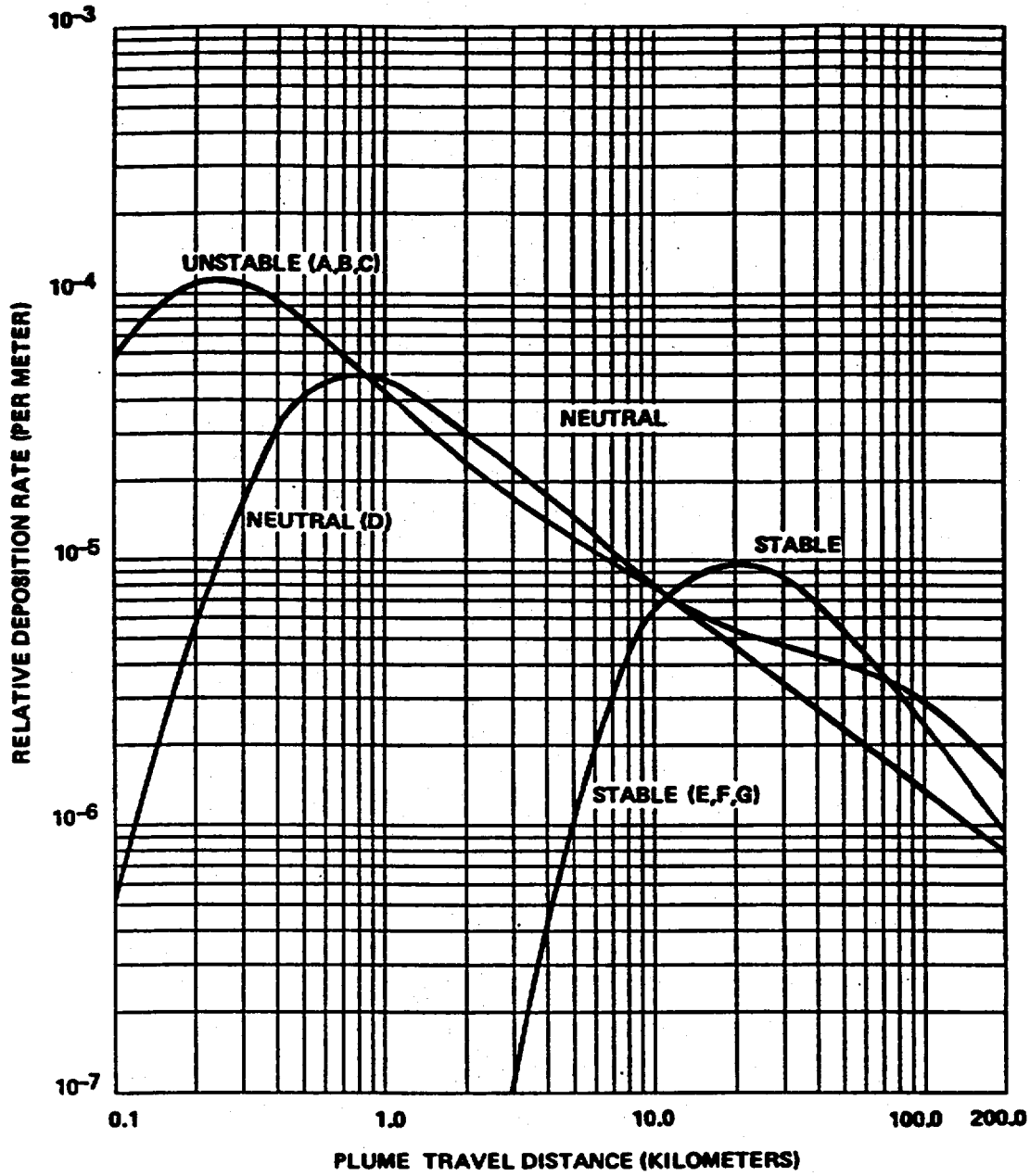

This graph is reproduced from Reference 5 (Figure 7).

Figure 8-8. Relative Deposition for 30-Meter Releases

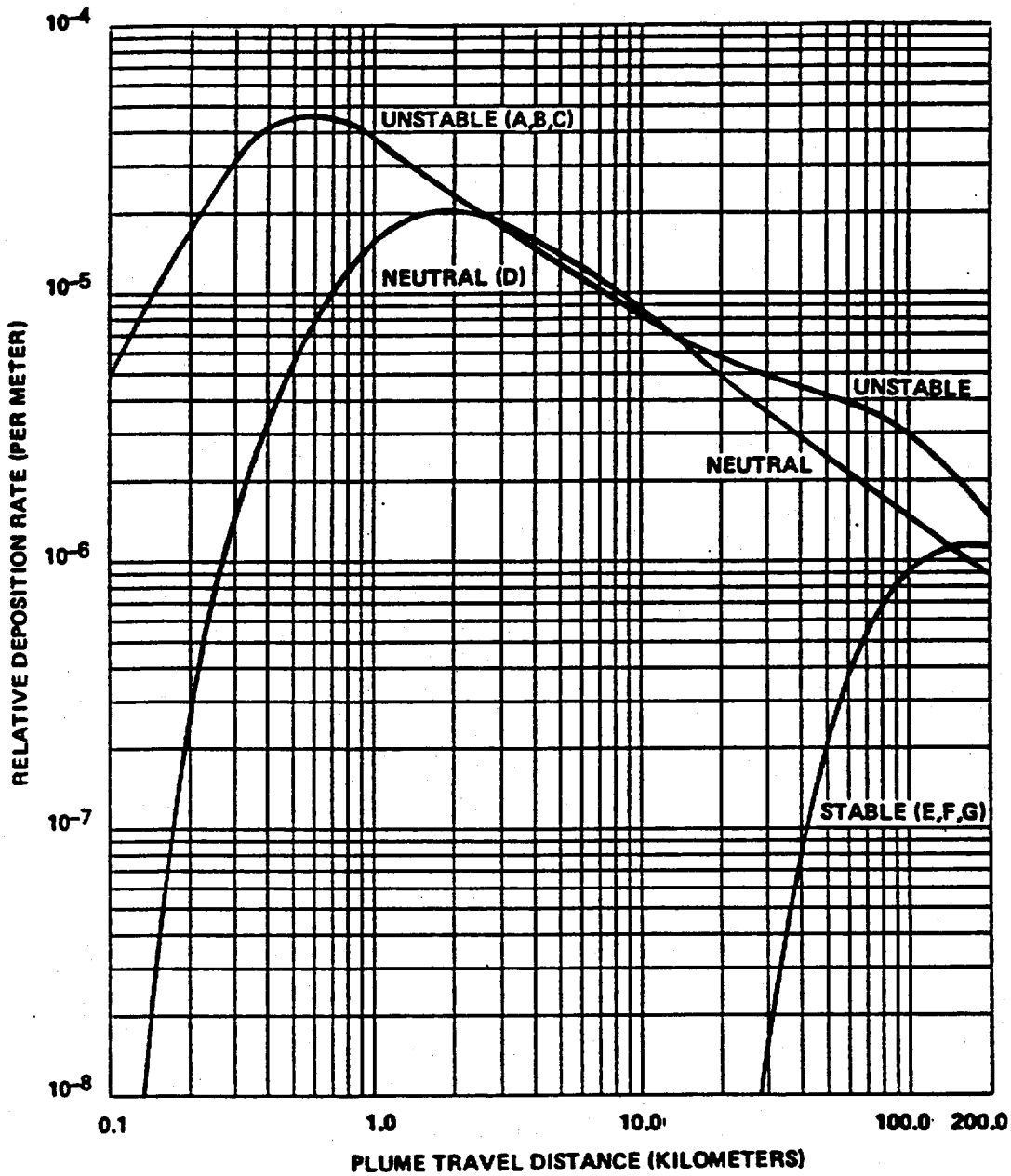

This graph is reproduced from Reference 5 (Figure 8).

Figure 8-9. Relative Deposition for 60-Meter Releases

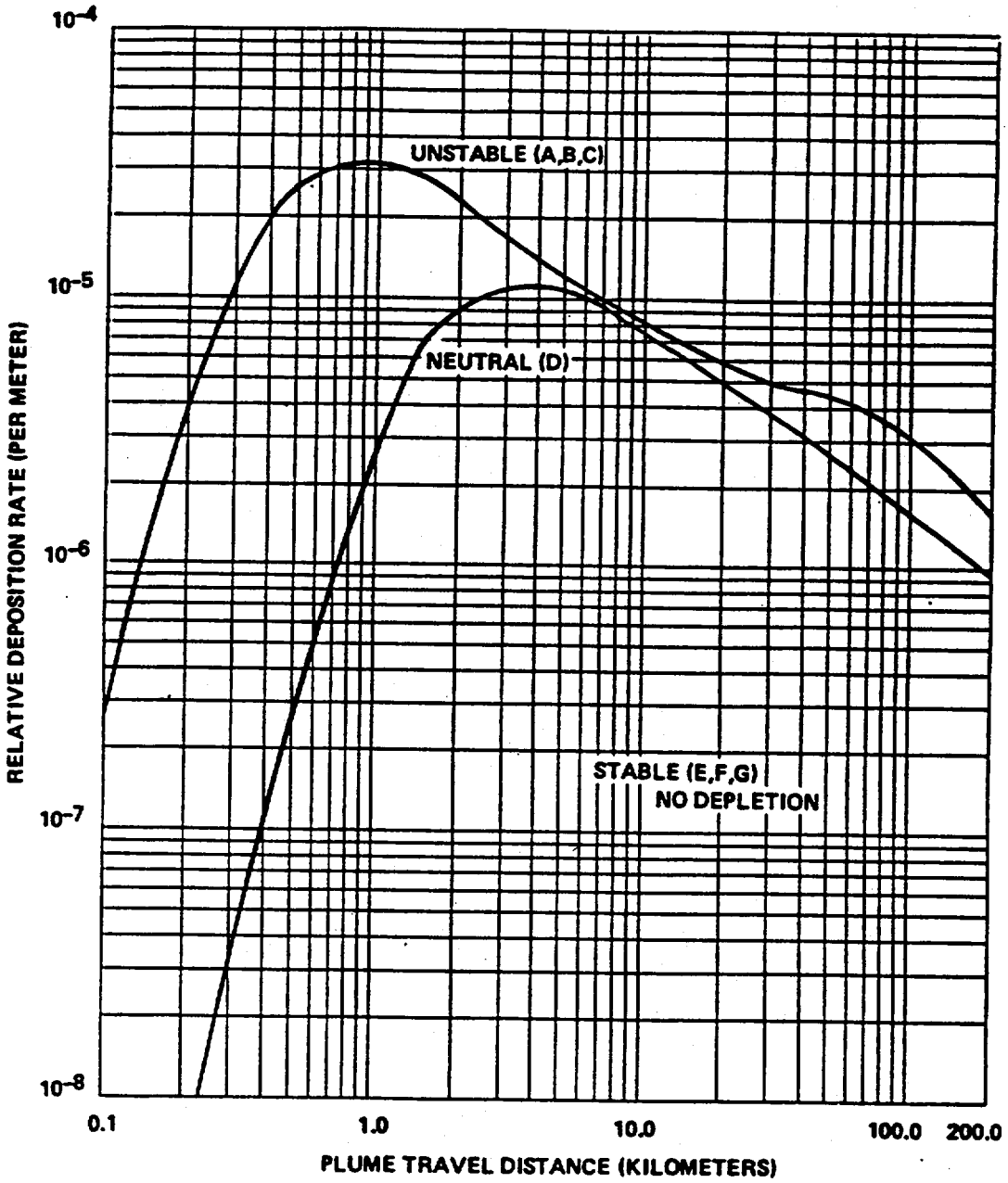

This graph is reproduced from Reference 5 (Figure 9).

Figure 8-10. Relative Deposition for 100-Meter (or Greater) Releases

CHAPTER 9

METHODS AND PARAMETERS FOR CALCULATION OF GASEOUS EFFLUENT PATHWAY DOSE FACTORS, R_{aipj}

9.1 INHALATION PATHWAY FACTOR

For the inhalation pathway, R_{aipj} in (mrem/y) per (μCi/m^3) is calculated as follows (Reference 1, Section 5.3.1.1):

$$R_{aipj} = K_1 \cdot (BR)_a \cdot (DFA)_{aij} \qquad (9.1)$$

where:

K_1 = the units conversion factor: 10^6 pCi/μCi.

$(BR)_a$ = the breathing rate of receptor age group a, in m^3/y, from Table 9-5.

$(DFA)_{aij}$ = the inhalation dose factor for receptor age group a, radionuclide i, and organ j, in mrem/pCi, from Table 9-7 through Table 9-10.

9.2 GROUND PLANE PATHWAY FACTOR

For the ground plane external exposure pathway, R_{aipj} in ($m^2 \cdot$mrem/y) per (μCi/s) is calculated as follows (Reference 1, Section 5.3.1.2):

$$R_{aipj} = K_1 \cdot K_2 \cdot (SHF) \cdot (DFG)_{ij} \cdot \left(\frac{1 - e^{-\lambda_i t}}{\lambda_i} \right) \qquad (9.2)$$

where:

K_1 = the units conversion factor: 10^6 pCi/μCi.

K_2 = the units conversion factor: 8760 h/y.

(SHF) = the shielding factor due to structure (dimensionless). The value used for (SHF) is 0.7, from (Reference 3, Table E-15).

$(DFG)_{ij}$ = the ground plane dose factor for radionuclide i and organ j, in (mrem/h) per (pCi/m^2), from Table 9-15. Dose factors are the same for all age groups, and those for the total body also apply to all organs other than skin.

λ_i = the radioactive decay constant for radionuclide i, in s^{-1}. Values of λ_i used in effluent calculations should be based on decay data from a recognized and current source, such as Reference 20.

t = the exposure time, in s. The value used for t is 4.73×10^8 s (= 15 y), from (Reference 1, Section 5.3.1.2).

9.3 GARDEN VEGETATION PATHWAY FACTOR

For radionuclides other than tritium in the garden vegetation consumption pathway, R_{aipj} in ($m^2 \cdot mrem/y$) per ($\mu Ci/s$) is calculated as follows (Reference 1, Section 5.3.1.5):

$$R_{aipj} = K_1 \cdot \frac{r}{Y_v\ (\lambda_i + \lambda_w)} \cdot (DFL)_{aij} \cdot \left(U_{aL}\ f_L\ e^{-\lambda_i t_L} + U_{aS}\ f_g\ e^{-\lambda_i t_{hv}} \right) \tag{9.3}$$

where:

K_1 = the units conversion factor: 10^6 pCi/μCi.

r = the fraction of deposited activity retained on the edible parts of garden vegetation (dimensionless). The value used for r is 1.0 for radioiodines and 0.2 for particulates, from (Reference 3, Table E-1).

Y_v = the areal density (agricultural productivity) of growing leafy garden vegetation, in kg/m^2, from Table 9-1.

λ_i = the radioactive decay constant for radionuclide i, in s^{-1}. Values of λ_i used in effluent calculations should be based on decay data from a recognized and current source, such as Reference 20.

λ_w = the rate constant for removal of activity on leaf and plant surfaces by weathering, in s^{-1}, from Table 9-1.

$(DFL)_{aij}$ = the ingestion dose factor for receptor age group a, radionuclide i, and organ j, in mrem/pCi, from Table 9-11 through Table 9-14.

U_{aL} = the consumption rate of fresh leafy garden vegetation by a receptor in age group a, in kg/y, from Table 9-5.

U_{aS} = the consumption rate of stored garden vegetation by a receptor in age group a, in kg/y, from Table 9-5.

f_L = the fraction of the annual intake of fresh leafy garden vegetation that is grown locally (dimensionless), from Table 9-1.

f_g = the fraction of the annual intake of stored garden vegetation that is grown locally (dimensionless), from Table 9-1.

t_L = the average time between harvest of fresh leafy garden vegetation and its consumption, in s, from Table 9-1.

t_{hv} = the average time between harvest of stored garden vegetation and its consumption, in s, from Table 9-1.

For tritium in the garden vegetation consumption pathway, R_{aipj} in (mrem/y) per (μCi/m^3) is calculated as follows (Reference 1, Section 5.3.1.5), based on the concentration in air rather than deposition onto the ground:

$$R_{aipj} = K_1 \cdot K_3 \cdot (DFL)_{aij} \cdot \left(U_{aL} f_L + U_{aS} f_g \right) \cdot 0.75 \cdot \left(\frac{0.5}{H}\right) \qquad (9.4)$$

where:

K_3 = the units conversion factor: 10^3 g/kg.

H = the absolute humidity of atmospheric air, in g/m^3, from Table 9-1.

0.75 = the fraction of the mass of total garden vegetation that is water (dimensionless).

0.5 = the ratio of the specific activity of tritium in garden vegetation water to that in atmospheric water (dimensionless).

and other parameters are as defined above.

Table 9-1. Miscellaneous Parameters for the Garden Vegetation Pathway

The following parameter values are for use in calculating R_{aipj} for the garden vegetation pathway only. The terms themselves are defined in section 9.3.

Parameter	Value	Reference
Y_v	2.0 kg/m^2	Ref. 3, Table E-15
λ_w	5.73×10^{-7} s^{-1} (14-day half-life)	Ref. 1, page 33
f_L	1.0	Ref. 1, page 36
f_g	0.76	Ref. 1, page 33
t_L	8.6×10^4 s (1 day)	Ref. 3, Table E-15
t_{hv}	5.18×10^6 s (60 days)	Ref. 3, Table E-15
H	8 g/m^3	Ref. 3

9.4 GRASS-COW-MILK PATHWAY FACTOR

For radionuclides other than tritium in the grass-cow-milk pathway, R_{aipj} in ($m^2 \cdot$mrem/y) per (μCi/s) is calculated as follows (Reference 1, Section 5.3.1.3):

$$R_{aipj} = K_1 \cdot \frac{r}{(\lambda_i + \lambda_w)} \cdot Q_F \cdot U_{ap} \cdot F_{mi} \cdot (DFL)_{aij} \cdot \left[\frac{f_p\, f_s}{Y_p} + \frac{(1 - f_p\, f_s)\, e^{-\lambda_i t_{hm}}}{Y_s} \right] \cdot e^{-\lambda_i t_f} \qquad (9.5)$$

where:

K_1 = the units conversion factor: 10^6 pCi/μCi.

r = the fraction of deposited activity retained on the edible parts of vegetation (dimensionless). The value used for r is 1.0 for radioiodines and 0.2 for particulates, from (Reference 3, Table E-1).

λ_i = the radioactive decay constant for radionuclide i, in s^{-1}. Values of λ_i used in effluent calculations should be based on decay data from a recognized and current source, such as Reference 20.

λ_w = the rate constant for removal of activity on leaf and plant surfaces by weathering, in s^{-1}, from Table 9-2.

Q_F = the cow's consumption rate of feed, in kg/d, from Table 9-2.

U_{ap} = the consumption rate of cow milk by a receptor in age group a, in L/y, from Table 9-5.

F_{mi} = the stable element transfer coefficient applicable to radionuclide i, for cow's milk, in d/L, from Table 9-6.

$(DFL)_{aij}$ = the ingestion dose factor for receptor age group a, radionuclide i, and organ j, in mrem/pCi, from Table 9-11 through Table 9-14.

f_p = the fraction of the year that the cow is on pasture (dimensionless), from Table 9-2.

f_s = the fraction of the cow's feed that is pasture grass while the cow is on pasture (dimensionless), from Table 9-2.

Y_p = the areal density (agricultural productivity) of growing pasture feed grass, in kg/m^2, from Table 9-2.

Y_s = the areal density (agricultural productivity) of growing stored feed, in kg/m^2, from Table 9-2.

t_{hm} = the transport time from harvest of stored feed to its consumption by the cow, in s, from Table 9-2.

t_f = the transport time from consumption of feed by the cow, to consumption of milk by the receptor, in s, from Table 9-2.

For tritium in the grass-cow-milk pathway, R_{aipj} in (mrem/y) per ($\mu Ci/m^3$) is calculated as follows (Reference 1, Section 5.3.1.5), based on the concentration in air rather than deposition onto the ground:

$$R_{aipj} = K_1 \cdot K_3 \cdot Q_F \cdot U_{ap} \cdot F_{mi} \cdot (DFL)_{aij} \cdot 0.75 \cdot \left(\frac{0.5}{H}\right) \qquad (9.6)$$

where:

K_3 = the units conversion factor: 10^3 g/kg.

H = the absolute humidity of atmospheric air, in g/m^3, from Table 9-2.

0.75 = the fraction of the mass of total vegetation that is water (dimensionless).

0.5 = the ratio of the specific activity of tritium in vegetation water to that in atmospheric water (dimensionless).

and other parameters are as defined above.

Table 9-2. Miscellaneous Parameters for the Grass-Cow-Milk Pathway

The following parameter values are for use in calculating R_{aipj} for the grass-cow-milk pathway only. The terms themselves are defined in section 9.4.

Parameter	Value	Reference
λ_w	5.73×10^{-7} s^{-1} (14-day half-life)	Ref. 1, page 33
Q_F	50 kg/d	Ref. 3, Table E-3
f_p	1.0	Ref. 1, page 33
f_s	1.0	Ref. 1, page 33
Y_p	0.7 kg/m^2	Ref. 3, Table E-15
Y_s	2.0 kg/m^2	Ref. 3, Table E-15
t_{hm}	7.78×10^6 s (90 days)	Ref. 3, Table E-15
t_f	1.73×10^5 s (2 days)	Ref. 3, Table E-15
H	8 g/m^3	Ref. 3

9.5 GRASS-GOAT-MILK PATHWAY FACTOR

For radionuclides other than tritium in the grass-goat-milk pathway, R_{aipj} in ($m^2 \cdot$mrem/y) per (μCi/s) is calculated as follows (Reference 1, Section 5.3.1.3):

$$R_{aipj} = K_1 \cdot \frac{r}{(\lambda_i + \lambda_w)} \cdot Q_F \cdot U_{ap} \cdot F_{mi} \cdot (DFL)_{aij} \cdot \left[\frac{f_p\, f_s}{Y_p} + \frac{(1 - f_p\, f_s)\, e^{-\lambda_i t_{hm}}}{Y_s} \right] \cdot e^{-\lambda_i t_f} \qquad (9.7)$$

where:

K_1 = the units conversion factor: 10^6 pCi/μCi.

r = the fraction of deposited activity retained on the edible parts of vegetation (dimensionless). The value used for r is 1.0 for radioiodines and 0.2 for particulates, from (Reference 3, Table E-1).

λ_i = the radioactive decay constant for radionuclide i, in s^{-1}. Values of λ_i used in effluent calculations should be based on decay data from a recognized and current source, such as Reference 20.

λ_w = the rate constant for removal of activity on leaf and plant surfaces by weathering, in s^{-1}, from Table 9-3.

Q_F = the goat's consumption rate of feed, in kg/d, from Table 9-3.

U_{ap} = the consumption rate of goat milk by a receptor in age group a, in L/y, from Table 9-5.

F_{mi} = the stable element transfer coefficient applicable to radionuclide i, for goat's milk, in d/L, from Table 9-6.

$(DFL)_{aij}$ = the ingestion dose factor for receptor age group a, radionuclide i, and organ j, in mrem/pCi, from Table 9-11 through Table 9-14.

f_p = the fraction of the year that the goat is on pasture (dimensionless), from Table 9-3.

f_s = the fraction of the goat's feed that is pasture grass while the goat is on pasture (dimensionless), from Table 9-3.

Y_p = the areal density (agricultural productivity) of growing pasture feed grass, in kg/m^2, from Table 9-3.

Y_s = the areal density (agricultural productivity) of growing stored feed, in kg/m^2, from Table 9-3.

t_{hm} = the transport time from harvest of stored feed to its consumption by the goat, in s, from Table 9-3.

t_f = the transport time from consumption of feed by the goat, to consumption of milk by the receptor, in s, from Table 9-3.

For tritium in the grass-goat-milk pathway, R_{aipj} in (mrem/y) per ($\mu Ci/m^3$) is calculated as follows (Reference 1, Section 5.3.1.5), based on the concentration in air rather than deposition onto the ground:

$$R_{aipj} = K_1 \cdot K_3 \cdot Q_F \cdot U_{ap} \cdot F_{mi} \cdot (DFL)_{aij} \cdot 0.75 \cdot \left(\frac{0.5}{H}\right) \qquad (9.8)$$

where:

K_3 = the units conversion factor: 10^3 g/kg.

H = the absolute humidity of atmospheric air, in g/m^3, from Table 9-3.

0.75 = the fraction of the mass of total vegetation that is water (dimensionless).

0.5 = the ratio of the specific activity of tritium in vegetation water to that in atmospheric water (dimensionless).

and other parameters are as defined above.

Table 9-3. Miscellaneous Parameters for the Grass-Goat-Milk Pathway

The following parameter values are for use in calculating R_{aipj} for the grass-goat-milk pathway only. The terms themselves are defined in section 9.5.

Parameter	Value	Reference
λ_w	5.73×10^{-7} s^{-1} (14-day half-life)	Ref. 1, page 33
Q_F	6 kg/d	Ref. 3, Table E-3
f_p	1.0	Ref. 1, page 33
f_s	1.0	Ref. 1, page 33
Y_p	0.7 kg/m^2	Ref. 3, Table E-15
Y_s	2.0 kg/m^2	Ref. 3, Table E-15
t_{hm}	7.78×10^6 s (90 days)	Ref. 3, Table E-15
t_f	1.73×10^5 s (2 days)	Ref. 3, Table E-15
H	8 g/m^3	Ref. 3

9.6 GRASS-COW-MEAT PATHWAY FACTOR

For radionuclides other than tritium in the grass-cow-meat pathway, R_{aipj} in ($m^2 \cdot$mrem/y) per (μCi/s) is calculated as follows (Reference 1, Section 5.3.1.4):

$$R_{aipj} = K_1 \cdot \frac{r}{(\lambda_i + \lambda_w)} \cdot Q_F \cdot U_{ap} \cdot F_{fi} \cdot (DFL)_{aij} \cdot \left[\frac{f_p\, f_s}{Y_p} + \frac{(1 - f_p\, f_s)\, e^{-\lambda_i t_{hm}}}{Y_s} \right] \cdot e^{-\lambda_i t_f} \qquad (9.9)$$

where:

K_1 = the units conversion factor: 10^6 pCi/μCi.

r = the fraction of deposited activity retained on the edible parts of vegetation (dimensionless). The value used for r is 1.0 for radioiodines and 0.2 for particulates, from (Reference 3, Table E-1).

λ_i = the radioactive decay constant for radionuclide i, in s^{-1}. Values of λ_i used in effluent calculations should be based on decay data from a recognized and current source, such as Reference 20.

λ_w = the rate constant for removal of activity on leaf and plant surfaces by weathering, in s^{-1}, from Table 9-4.

Q_F = the cow's consumption rate of feed, in kg/d, from Table 9-4.

U_{ap} = the consumption rate of meat by a receptor in age group a, in kg/y, from Table 9-5.

F_{fi} = the stable element transfer coefficient applicable to radionuclide i, for meat, in d/kg, from Table 9-6.

$(DFL)_{aij}$ = the ingestion dose factor for receptor age group a, radionuclide i, and organ j, in mrem/pCi, from Table 9-11 through Table 9-14.

f_p = the fraction of the year that the cow is on pasture (dimensionless), from Table 9-4.

f_s = the fraction of the cow's feed that is pasture grass while the cow is on pasture (dimensionless), from Table 9-4.

Y_p = the areal density (agricultural productivity) of growing pasture feed grass, in kg/m^2, from Table 9-4.

Y_s = the areal density (agricultural productivity) of growing stored feed, in kg/m^2, from Table 9-4.

t_{hm} = the transport time from harvest of stored feed to its consumption by the cow, in s, from Table 9-4.

t_f = the transport time from consumption of feed by the cow, to consumption of meat by the receptor, in s, from Table 9-4.

For tritium in the grass-cow-meat pathway, R_{aipj} in (mrem/y) per ($\mu Ci/m^3$) is calculated as follows (Reference 1, Section 5.3.1.4), based on the concentration in air rather than deposition onto the ground:

$$R_{aipj} = K_1 \cdot K_3 \cdot Q_F \cdot U_{ap} \cdot F_{fi} \cdot (DFL)_{aij} \cdot 0.75 \cdot \left(\frac{0.5}{H}\right) \qquad (9.10)$$

where:

K_3 = the units conversion factor: 10^3 g/kg.

H = the absolute humidity of atmospheric air, in g/m^3, from Table 9-4.

0.75 = the fraction of the mass of total vegetation that is water (dimensionless).

0.5 = the ratio of the specific activity of tritium in vegetation water to that in atmospheric water (dimensionless).

and other parameters are as defined above.

Table 9-4. Miscellaneous Parameters for the Grass-Cow-Meat Pathway

The following parameter values are for use in calculating R_{aipj} for the grass-cow-meat pathway only. The terms themselves are defined in section 9.6.

Parameter	Value	Reference
λ_w	5.73×10^{-7} s^{-1} (14-day half-life)	Ref. 1, page 33
Q_F	50 kg/d	Ref. 3, Table E-3
f_p	1.0	Ref. 1, page 33
f_s	1.0	Ref. 1, page 33
Y_p	0.7 kg/m^2	Ref. 3, Table E-15
Y_s	2.0 kg/m^2	Ref. 3, Table E-15
t_{hm}	7.78×10^6 s (90 days)	Ref. 3, Table E-15
t_f	1.73×10^6 s (20 days)	Ref. 3, Table E-15
H	8 g/m^3	Ref. 3

Table 9-5. Individual Usage Factors

Usage Factor	Receptor Age Group			
	Infant	Child	Teenager	Adult
Milk Consumption Rate, U_{ap} (L/y)	330	330	400	310
Meat Consumption Rate, U_{ap} (kg/y)	0	41	65	110
Fresh Leafy Garden Vegetation Consumption Rate, U_{aL} (kg/y)	0	26	42	64
Stored Garden Vegetation Consumption Rate, U_{aS} (kg/y)	0	520	630	520
Breathing Rate, $(BR)_a$ (m^3/y)	1400	3700	8000	8000

All values are from Reference 3, Table E-5.

Table 9-6. Stable Element Transfer Data

Element	Cow Milk F_m (d/L)*	Goat Milk F_m (d/L)+	Meat F_f (d/kg)*
H	1.0 E-02	1.7 E-01	1.2 E-02
C	1.2 E-02	1.0 E-01	3.1 E-02
Na	4.0 E-02	4.0 E-02	3.0 E-02
P	2.5 E-02	2.5 E-01	4.6 E-02
Cr	2.2 E-03	2.2 E-03	2.4 E-03
Mn	2.5 E-04	2.5 E-04	8.0 E-04
Fe	1.2 E-03	1.3 E-04	4.0 E-02
Co	1.0 E-03	1.0 E-03	1.3 E-02
Ni	6.7 E-03	6.7 E-03	5.3 E-02
Cu	1.4 E-02	1.3 E-02	8.0 E-03
Zn	3.9 E-02	3.9 E-02	3.0 E-02
Br	5.0 E-02	5.0 E-02	2.6 E-02
Rb	3.0 E-02	3.0 E-02	3.1 E-02
Sr	8.0 E-04	1.4 E-02	6.0 E-04
Y	1.0 E-05	1.0 E-05	4.6 E-03
Zr	5.0 E-06	5.0 E-06	3.4 E-02
Nb	2.5 E-03	2.5 E-03	2.8 E-01
Mo	7.5 E-03	7.5 E-03	8.0 E-03
Tc	2.5 E-02	2.5 E-02	4.0 E-01
Ru	1.0 E-06	1.0 E-06	4.0 E-01
Rh	1.0 E-02	1.0 E-02	1.5 E-03
Ag	5.0 E-02	5.0 E-02	1.7 E-02
Sb	1.5 E-03	1.5 E-03	4.0 E-03
Te	1.0 E-03	1.0 E-03	7.7 E-02
I	6.0 E-03	6.0 E-02	2.9 E-03
Cs	1.2 E-02	3.0 E-01	4.0 E-03
Ba	4.0 E-04	4.0 E-04	3.2 E-03
La	5.0 E-06	5.0 E-06	2.0 E-04
Ce	1.0 E-04	1.0 E-04	1.2 E-03
Pr	5.0 E-06	5.0 E-06	4.7 E-03
Nd	5.0 E-06	5.0 E-06	3.3 E-03
W	5.0 E-04	5.0 E-04	1.3 E-03
Np	5.0 E-06	5.0 E-06	2.0 E-04

* - Values from Reference 3 (Table E-1) except as follows: Reference 2 (Table C-5) for Br and Sb.

\+ - Values from Reference 3, Table E-2 for H, C, P, Fe, Cu, Sr, I, and Cs in goat milk, and Table E-1 for all other elements in cow milk, except as follows: Reference 2 (Table C-5) for Br and Sb in cow milk.

Table 9-7. Inhalation Dose Factors for the Infant Age Group

Nuclide	Bone	Liver	T.Body	Thyroid	Kidney	Lung	GI-LLI
H-3	No Data	4.62E-07	4.62E-07	4.62E-07	4.62E-07	4.62E-07	4.62E-07
C-14	1.89E-05	3.79E-06	3.79E-06	3.79E-06	3.79E-06	3.79E-06	3.79E-06
Na-24	7.54E-06	7.54E-06	7.54E-06	7.54E-06	7.54E-06	7.54E-06	7.54E-06
P-32	1.45E-03	8.03E-05	5.53E-05	No Data	No Data	No Data	1.15E-05
Cr-51	No Data	No Data	6.39E-08	4.11E-08	9.45E-09	9.17E-06	2.55E-07
Mn-54	No Data	1.81E-05	3.56E-06	No Data	3.56E-06	7.14E-04	5.04E-06
Mn-56	No Data	1.10E-09	1.58E-10	No Data	7.86E-10	8.95E-06	5.12E-05
Fe-55	1.41E-05	8.39E-06	2.38E-06	No Data	No Data	6.21E-05	7.82E-07
Fe-59	9.69E-06	1.68E-05	6.77E-06	No Data	No Data	7.25E-04	1.77E-05
Co-58	No Data	8.71E-07	1.30E-06	No Data	No Data	5.55E-04	7.95E-06
Co-60	No Data	5.73E-06	8.41E-06	No Data	No Data	3.22E-03	2.28E-05
Ni-63	2.42E-04	1.46E-05	8.29E-06	No Data	No Data	1.49E-04	1.73E-06
Ni-65	1.71E-09	2.03E-10	8.79E-11	No Data	No Data	5.80E-06	3.58E-05
Cu-64	No Data	1.34E-09	5.53E-10	No Data	2.84E-09	6.64E-06	1.07E-05
Zn-65	1.38E-05	4.47E-05	2.22E-05	No Data	2.32E-05	4.62E-04	3.67E-05
Zn-69	3.85E-11	6.91E-11	5.13E-12	No Data	2.87E-11	1.05E-06	9.44E-06
Br-83	No Data	No Data	2.72E-07	No Data	No Data	No Data	No Data
Br-84	No Data	No Data	2.86E-07	No Data	No Data	No Data	No Data
Br-85	No Data	No Data	1.46E-08	No Data	No Data	No Data	No Data
Rb-86	No Data	1.36E-04	6.30E-05	No Data	No Data	No Data	2.17E-06
Rb-88	No Data	3.98E-07	2.05E-07	No Data	No Data	No Data	2.42E-07
Rb-89	No Data	2.29E-07	1.47E-07	No Data	No Data	No Data	4.87E-08
Sr-89	2.84E-04	No Data	8.15E-06	No Data	No Data	1.45E-03	4.57E-05
Sr-90	2.92E-02	No Data	1.85E-03	No Data	No Data	8.03E-03	9.36E-05
Sr-91	6.83E-08	No Data	2.47E-09	No Data	No Data	3.76E-05	5.24E-05

All values are in (mrem/pCi inhaled). They are obtained from Reference 3 (Table E-10). Neither Reference 2 nor Reference 3 contains data for Rh-105, Sb-124, or Sb-125.

Table 9-7 (contd). Inhalation Dose Factors for the Infant Age Group

Nuclide	Bone	Liver	T.Body	Thyroid	Kidney	Lung	GI-LLI
Sr-92	7.50E-09	No Data	2.79E-10	No Data	No Data	1.70E-05	1.00E-04
Y-90	2.35E-06	No Data	6.30E-08	No Data	No Data	1.92E-04	7.43E-05
Y-91m	2.91E-10	No Data	9.90E-12	No Data	No Data	1.99E-06	1.68E-06
Y-91	4.20E-04	No Data	1.12E-05	No Data	No Data	1.75E-03	5.02E-05
Y-92	1.17E-08	No Data	3.29E-10	No Data	No Data	1.75E-05	9.04E-05
Y-93	1.07E-07	No Data	2.91E-09	No Data	No Data	5.46E-05	1.19E-04
Zr-95	8.24E-05	1.99E-05	1.45E-05	No Data	2.22E-05	1.25E-03	1.55E-05
Zr-97	1.07E-07	1.83E-08	8.36E-09	No Data	1.85E-08	7.88E-05	1.00E-04
Nb-95	1.12E-05	4.59E-06	2.70E-06	No Data	3.37E-06	3.42E-04	9.05E-06
Mo-99	No Data	1.18E-07	2.31E-08	No Data	1.89E-07	9.63E-05	3.48E-05
Tc-99m	9.98E-13	2.06E-12	2.66E-11	No Data	2.22E-11	5.79E-07	1.45E-06
Tc-101	4.65E-14	5.88E-14	5.80E-13	No Data	6.99E-13	4.17E-07	6.03E-07
Ru-103	1.44E-06	No Data	4.85E-07	No Data	3.03E-06	3.94E-04	1.15E-05
Ru-105	8.74E-10	No Data	2.93E-10	No Data	6.42E-10	1.12E-05	3.46E-05
Ru-106	6.20E-05	No Data	7.77E-06	No Data	7.61E-05	8.26E-03	1.17E-04
Rh-105	No Data	No Data	No Data	No Data	No Data	No Data	No Data
Ag-110m	7.13E-06	5.16E-06	3.57E-06	No Data	7.80E-06	2.62E-03	2.36E-05
Sb-124	No Data	No Data	No Data	No Data	No Data	No Data	No Data
Sb-125	No Data	No Data	No Data	No Data	No Data	No Data	No Data
Te-125m	3.40E-06	1.42E-06	4.70E-07	1.16E-06	No Data	3.19E-04	9.22E-06
Te-127m	1.19E-05	4.93E-06	1.48E-06	3.48E-06	2.68E-05	9.37E-04	1.95E-05
Te-127	1.59E-09	6.81E-10	3.49E-10	1.32E-09	3.47E-09	7.39E-06	1.74E-05
Te-129m	1.01E-05	4.35E-06	1.59E-06	3.91E-06	2.27E-05	1.20E-03	4.93E-05
Te-129	5.63E-11	2.48E-11	1.34E-11	4.82E-11	1.25E-10	2.14E-06	1.88E-05
Te-131m	7.62E-08	3.93E-08	2.59E-08	6.38E-08	1.89E-07	1.42E-04	8.51E-05
Te-131	1.24E-11	5.87E-12	3.57E-12	1.13E-11	2.85E-11	1.47E-06	5.87E-06

Table 9-7 (contd). Inhalation Dose Factors for the Infant Age Group

Nuclide	Bone	Liver	T.Body	Thyroid	Kidney	Lung	GI-LLI
Te-132	2.66E-07	1.69E-07	1.26E-07	1.99E-07	7.39E-07	2.43E-04	3.15E-05
I-130	4.54E-06	9.91E-06	3.98E-06	1.14E-03	1.09E-05	No Data	1.42E-06
I-131	2.71E-05	3.17E-05	1.40E-05	1.06E-02	3.70E-05	No Data	7.56E-07
I-132	1.21E-06	2.53E-06	8.99E-07	1.21E-04	2.82E-06	No Data	1.36E-06
I-133	9.46E-06	1.37E-05	4.00E-06	2.54E-03	1.60E-05	No Data	1.54E-06
I-134	6.58E-07	1.34E-06	4.75E-07	3.18E-05	1.49E-06	No Data	9.21E-07
I-135	2.76E-06	5.43E-06	1.98E-06	4.97E-04	6.05E-06	No Data	1.31E-06
Cs-134	2.83E-04	5.02E-04	5.32E-05	No Data	1.36E-04	5.69E-05	9.53E-07
Cs-136	3.45E-05	9.61E-05	3.78E-05	No Data	4.03E-05	8.40E-06	1.02E-06
Cs-137	3.92E-04	4.37E-04	3.25E-05	No Data	1.23E-04	5.09E-05	9.53E-07
Cs-138	3.61E-07	5.58E-07	2.84E-07	No Data	2.93E-07	4.67E-08	6.26E-07
Ba-139	1.06E-09	7.03E-13	3.07E-11	No Data	4.23E-13	4.25E-06	3.64E-05
Ba-140	4.00E-05	4.00E-08	2.07E-06	No Data	9.59E-09	1.14E-03	2.74E-05
Ba-141	1.12E-10	7.70E-14	3.55E-12	No Data	4.64E-14	2.12E-06	3.39E-06
Ba-142	2.84E-11	2.36E-14	1.40E-12	No Data	1.36E-14	1.11E-06	4.95E-07
La-140	3.61E-07	1.43E-07	3.68E-08	No Data	No Data	1.20E-04	6.06E-05
La-142	7.36E-10	2.69E-10	6.46E-11	No Data	No Data	5.87E-06	4.25E-05
Ce-141	1.98E-05	1.19E-05	1.42E-06	No Data	3.75E-06	3.69E-04	1.54E-05
Ce-143	2.09E-07	1.38E-07	1.58E-08	No Data	4.03E-08	8.30E-05	3.55E-05
Ce-144	2.28E-03	8.65E-04	1.26E-04	No Data	3.84E-04	7.03E-03	1.06E-04
Pr-143	1.00E-05	3.74E-06	4.99E-07	No Data	1.41E-06	3.09E-04	2.66E-05
Pr-144	3.42E-11	1.32E-11	1.72E-12	No Data	4.80E-12	1.15E-06	3.06E-06
Nd-147	5.67E-06	5.81E-06	3.57E-07	No Data	2.25E-06	2.30E-04	2.23E-05
W-187	9.26E-09	6.44E-09	2.23E-09	No Data	No Data	2.83E-05	2.54E-05
Np-239	2.65E-07	2.37E-08	1.34E-08	No Data	4.73E-08	4.25E-05	1.78E-05

Table 9-8. Inhalation Dose Factors for the Child Age Group

Nuclide	Bone	Liver	T. Body	Thyroid	Kidney	Lung	GI-LLI
H-3	No Data	3.04E-07	3.04E-07	3.04E-07	3.04E-07	3.04E-07	3.04E-07
C-14	9.70E-06	1.82E-06	1.82E-06	1.82E-06	1.82E-06	1.82E-06	1.82E-06
Na-24	4.35E-06	4.35E-06	4.35E-06	4.35E-06	4.35E-06	4.35E-06	4.35E-06
P-32	7.04E-04	3.09E-05	2.67E-05	No Data	No Data	No Data	1.14E-05
Cr-51	No Data	No Data	4.17E-08	2.31E-08	6.57E-09	4.59E-06	2.93E-07
Mn-54	No Data	1.16E-05	2.57E-06	No Data	2.71E-06	4.26E-04	6.19E-06
Mn-56	No Data	4.48E-10	8.43E-11	No Data	4.52E-10	3.55E-06	3.33E-05
Fe-55	1.28E-05	6.80E-06	2.10E-06	No Data	No Data	3.00E-05	7.75E-07
Fe-59	5.59E-06	9.04E-06	4.51E-06	No Data	No Data	3.43E-04	1.91E-05
Co-58	No Data	4.79E-07	8.55E-07	No Data	No Data	2.99E-04	9.29E-06
Co-60	No Data	3.55E-06	6.12E-06	No Data	No Data	1.91E-03	2.60E-05
Ni-63	2.22E-04	1.25E-05	7.56E-06	No Data	No Data	7.43E-05	1.71E-06
Ni-65	8.08E-10	7.99E-11	4.44E-11	No Data	No Data	2.21E-06	2.27E-05
Cu-64	No Data	5.39E-10	2.90E-10	No Data	1.63E-09	2.59E-06	9.92E-06
Zn-65	1.15E-05	3.06E-05	1.90E-05	No Data	1.93E-05	2.69E-04	4.41E-06
Zn-69	1.81E-11	2.61E-11	2.41E-12	No Data	1.58E-11	3.84E-07	2.75E-06
Br-83	No Data	No Data	1.28E-07	No Data	No Data	No Data	No Data
Br-84	No Data	No Data	1.48E-07	No Data	No Data	No Data	No Data
Br-85	No Data	No Data	6.84E-09	No Data	No Data	No Data	No Data
Rb-86	No Data	5.36E-05	3.09E-05	No Data	No Data	No Data	2.16E-06
Rb-88	No Data	1.52E-07	9.90E-08	No Data	No Data	No Data	4.66E-09
Rb-89	No Data	9.33E-08	7.83E-08	No Data	No Data	No Data	5.11E-10
Sr-89	1.62E-04	No Data	4.66E-06	No Data	No Data	5.83E-04	4.52E-05
Sr-90	2.73E-02	No Data	1.74E-03	No Data	No Data	3.99E-03	9.28E-05
Sr-91	3.28E-08	No Data	1.24E-09	No Data	No Data	1.44E-05	4.70E-05

All values are in (mrem/pCi inhaled). They are obtained from Reference 3 (Table E-9). Neither Reference 2 nor Reference 3 contains data for Rh-105, Sb-124, or Sb-125.

Table 9-8 (contd). Inhalation Dose Factors for the Child Age Group

Nuclide	Bone	Liver	T.Body	Thyroid	Kidney	Lung	GI-LLI
Sr-92	3.54E-09	No Data	1.42E-10	No Data	No Data	6.49E-06	6.55E-05
Y-90	1.11E-06	No Data	2.99E-08	No Data	No Data	7.07E-05	7.24E-05
Y-91m	1.37E-10	No Data	4.98E-12	No Data	No Data	7.60E-07	4.64E-07
Y-91	2.47E-04	No Data	6.59E-06	No Data	No Data	7.10E-04	4.97E-05
Y-92	5.50E-09	No Data	1.57E-10	No Data	No Data	6.46E-06	6.46E-05
Y-93	5.04E-08	No Data	1.38E-09	No Data	No Data	2.01E-05	1.05E-04
Zr-95	5.13E-05	1.13E-05	1.00E-05	No Data	1.61E-05	6.03E-04	1.65E-05
Zr-97	5.07E-08	7.34E-09	4.32E-09	No Data	1.05E-08	3.06E-05	9.49E-05
Nb-95	6.35E-06	2.48E-06	1.77E-06	No Data	2.33E-06	1.66E-04	1.00E-05
Mo-99	No Data	4.66E-08	1.15E-08	No Data	1.06E-07	3.66E-05	3.42E-05
Tc-99m	4.81E-13	9.41E-13	1.56E-11	No Data	1.37E-11	2.57E-07	1.30E-06
Tc-101	2.19E-14	2.30E-14	2.91E-13	No Data	3.92E-13	1.58E-07	4.41E-09
Ru-103	7.55E-07	No Data	2.90E-07	No Data	1.90E-06	1.79E-04	1.21E-05
Ru-105	4.13E-10	No Data	1.50E-10	No Data	3.63E-10	4.30E-06	2.69E-05
Ru-106	3.68E-05	No Data	4.57E-06	No Data	4.97E-05	3.87E-03	1.16E-04
Rh-105	No Data	No Data	No Data	No Data	No Data	No Data	No Data
Ag-110m	4.56E-06	3.08E-06	2.47E-06	No Data	5.74E-06	1.48E-03	2.71E-05
Sb-124	No Data	No Data	No Data	No Data	No Data	No Data	No Data
Sb-125	No Data	No Data	No Data	No Data	No Data	No Data	No Data
Te-125m	1.82E-06	6.29E-07	2.47E-07	5.20E-07	No Data	1.29E-04	9.13E-06
Te-127m	6.72E-06	2.31E-06	8.16E-07	1.64E-06	1.72E-05	4.00E-04	1.93E-05
Te-127	7.49E-10	2.57E-10	1.65E-10	5.30E-10	1.91E-09	2.71E-06	1.52E-05
Te-129m	5.19E-06	1.85E-06	8.22E-07	1.71E-06	1.36E-05	4.76E-04	4.91E-05
Te-129	2.64E-11	9.45E-12	6.44E-12	1.93E-11	6.94E-11	7.93E-07	6.89E-06
Te-131m	3.63E-08	1.60E-08	1.37E-08	2.64E-08	1.08E-07	5.56E-05	8.32E-05
Te-131	5.87E-12	2.28E-12	1.78E-12	4.59E-12	1.59E-11	5.55E-07	3.60E-07

Table 9-8 (contd). Inhalation Dose Factors for the Child Age Group

Nuclide	Bone	Liver	T.Body	Thyroid	Kidney	Lung	GI-LLI
Te-132	1.30E-07	7.36E-08	7.12E-08	8.58E-08	4.79E-07	1.02E-04	3.72E-05
I-130	2.21E-06	4.43E-06	2.28E-06	4.99E-04	6.61E-06	No Data	1.38E-06
I-131	1.30E-05	1.30E-05	7.37E-06	4.39E-03	2.13E-05	No Data	7.68E-07
I-132	5.72E-07	1.10E-06	5.07E-07	5.23E-05	1.69E-06	No Data	8.65E-07
I-133	4.48E-06	5.49E-06	2.08E-06	1.04E-03	9.13E-06	No Data	1.48E-06
I-134	3.17E-07	5.84E-07	2.69E-07	1.37E-05	8.92E-07	No Data	2.58E-07
I-135	1.33E-06	2.36E-06	1.12E-06	2.14E-04	3.62E-06	No Data	1.20E-06
Cs-134	1.76E-04	2.74E-04	6.07E-05	No Data	8.93E-05	3.27E-05	1.04E-06
Cs-136	1.76E-05	4.62E-05	3.14E-05	No Data	2.58E-05	3.93E-06	1.13E-06
Cs-137	2.45E-04	2.23E-04	3.47E-05	No Data	7.63E-05	2.81E-05	9.78E-07
Cs-138	1.71E-07	2.27E-07	1.50E-07	No Data	1.68E-07	1.84E-08	7.29E-08
Ba-139	4.98E-10	2.66E-13	1.45E-11	No Data	2.33E-13	1.56E-06	1.56E-05
Ba-140	2.00E-05	1.75E-08	1.17E-06	No Data	5.71E-09	4.71E-04	2.75E-05
Ba-141	5.29E-11	2.95E-14	1.72E-12	No Data	2.56E-14	7.89E-07	7.44E-08
Ba-142	1.35E-11	9.73E-15	7.54E-13	No Data	7.87E-15	4.44E-07	7.41E-10
La-140	1.74E-07	6.08E-08	2.04E-08	No Data	No Data	4.94E-05	6.10E-05
La-142	3.50E-10	1.11E-10	3.49E-11	No Data	No Data	2.35E-06	2.05E-05
Ce-141	1.06E-05	5.28E-06	7.83E-07	No Data	2.31E-06	1.47E-04	1.53E-05
Ce-143	9.89E-08	5.37E-08	7.77E-09	No Data	2.26E-08	3.12E-05	3.44E-05
Ce-144	1.83E-03	5.72E-04	9.77E-05	No Data	3.17E-04	3.23E-03	1.05E-04
Pr-143	4.99E-06	1.50E-06	2.47E-07	No Data	8.11E-07	1.17E-04	2.63E-05
Pr-144	1.61E-11	4.99E-12	8.10E-13	No Data	2.64E-12	4.23E-07	5.32E-08
Nd-147	2.92E-06	2.36E-06	1.84E-07	No Data	1.30E-06	8.87E-05	2.22E-05
W-187	4.41E-09	2.61E-09	1.17E-09	No Data	No Data	1.11E-05	2.46E-05
Np-239	1.26E-07	9.04E-09	6.35E-09	No Data	2.63E-08	1.57E-05	1.73E-05

Table 9-9. Inhalation Dose Factors for the Teenager Age Group

Nuclide	Bone	Liver	T.Body	Thyroid	Kidney	Lung	GI-LLI
H-3	No Data	1.59E-07	1.59E-07	1.59E-07	1.59E-07	1.59E-07	1.59E-07
C-14	3.25E-06	6.09E-07	6.09E-07	6.09E-07	6.09E-07	6.09E-07	6.09E-07
Na-24	1.72E-06	1.72E-06	1.72E-06	1.72E-06	1.72E-06	1.72E-06	1.72E-06
P-32	2.36E-04	1.37E-08	8.95E-06	No Data	No Data	No Data	1.16E-05
Cr-51	No Data	No Data	1.69E-08	9.37E-09	3.84E-09	2.62E-06	3.75E-07
Mn-54	No Data	6.39E-06	1.05E-06	No Data	1.59E-06	2.48E-04	8.35E-06
Mn-56	No Data	2.12E-10	3.15E-11	No Data	2.24E-10	1.90E-06	7.18E-06
Fe-55	4.18E-06	2.98E-06	6.93E-07	No Data	No Data	1.55E-05	7.99E-07
Fe-59	1.99E-06	4.62E-06	1.79E-06	No Data	No Data	1.91E-04	2.23E-05
Co-58	No Data	2.59E-07	3.47E-07	No Data	No Data	1.68E-04	1.19E-05
Co-60	No Data	1.89E-06	2.48E-06	No Data	No Data	1.09E-03	3.24E-05
Ni-63	7.25E-05	5.43E-06	2.47E-06	No Data	No Data	3.84E-05	1.77E-06
Ni-65	2.73E-10	3.66E-11	1.59E-11	No Data	No Data	1.17E-06	4.59E-06
Cu-64	No Data	2.54E-10	1.06E-10	No Data	8.01E-10	1.39E-06	7.68E-06
Zn-65	4.82E-06	1.67E-05	7.80E-06	No Data	1.08E-05	1.55E-04	5.83E-06
Zn-69	6.04E-12	1.15E-11	8.07E-13	No Data	7.53E-12	1.98E-07	3.56E-08
Br-83	No Data	No Data	4.30E-08	No Data	No Data	No Data	No Data
Br-84	No Data	No Data	5.41E-08	No Data	No Data	No Data	No Data
Br-85	No Data	No Data	2.29E-09	No Data	No Data	No Data	No Data
Rb-86	No Data	2.38E-05	1.05E-05	No Data	No Data	No Data	2.21E-06
Rb-88	No Data	6.82E-08	3.40E-08	No Data	No Data	No Data	3.65E-15
Rb-89	No Data	4.40E-08	2.91E-08	No Data	No Data	No Data	4.22E-17
Sr-89	5.43E-05	No Data	1.56E-06	No Data	No Data	3.02E-04	4.64E-05
Sr-90	1.35E-02	No Data	8.35E-04	No Data	No Data	2.06E-03	9.56E-05
Sr-91	1.10E-08	No Data	4.39E-10	No Data	No Data	7.59E-06	3.24E-05

All values are in (mrem/pCi inhaled). They are obtained from Reference 3 (Table E-8). Neither Reference 2 nor Reference 3 contains data for Rh-105, Sb-124, or Sb-125.

Table 9-9 (contd). Inhalation Dose Factors for the Teenager Age Group

Nuclide	Bone	Liver	T.Body	Thyroid	Kidney	Lung	GI-LLI
Sr-92	1.19E-09	No Data	5.08E-11	No Data	No Data	3.43E-06	1.49E-05
Y-90	3.73E-07	No Data	1.00E-08	No Data	No Data	3.66E-05	6.99E-05
Y-91m	4.63E-11	No Data	1.77E-12	No Data	No Data	4.00E-07	3.77E-09
Y-91	8.26E-05	No Data	2.21E-06	No Data	No Data	3.67E-04	5.11E-05
Y-92	1.84E-09	No Data	5.36E-11	No Data	No Data	3.35E-06	2.06E-05
Y-93	1.69E-08	No Data	4.65E-10	No Data	No Data	1.04E-05	7.24E-05
Zr-95	1.82E-05	5.73E-06	3.94E-06	No Data	8.42E-06	3.36E-04	1.86E-05
Zr-97	1.72E-08	3.40E-09	1.57E-09	No Data	5.15E-09	1.62E-05	7.88E-05
Nb-95	2.32E-06	1.29E-06	7.08E-07	No Data	1.25E-06	9.39E-05	1.21E-05
Mo-99	No Data	2.11E-08	4.03E-09	No Data	5.14E-08	1.92E-05	3.36E-05
Tc-99m	1.73E-13	4.83E-13	6.24E-12	No Data	7.20E-12	1.44E-07	7.66E-07
Tc-101	7.40E-15	1.05E-14	1.03E-13	No Data	1.90E-13	8.34E-08	1.09E-16
Ru-103	2.63E-07	No Data	1.12E-07	No Data	9.29E-07	9.79E-05	1.36E-05
Ru-105	1.40E-10	No Data	5.42E-11	No Data	1.76E-10	2.27E-06	1.13E-05
Ru-106	1.23E-05	No Data	1.55E-06	No Data	2.38E-05	2.01E-03	1.20E-04
Rh-105	No Data	No Data	No Data	No Data	No Data	No Data	No Data
Ag-110m	1.73E-06	1.64E-06	9.99E-07	No Data	3.13E-06	8.44E-04	3.41E-05
Sb-124	No Data	No Data	No Data	No Data	No Data	No Data	No Data
Sb-125	No Data	No Data	No Data	No Data	No Data	No Data	No Data
Te-125m	6.10E-07	2.80E-07	8.34E-08	1.75E-07	No Data	6.70E-05	9.38E-06
Te-127m	2.25E-06	1.02E-06	2.73E-07	5.48E-07	8.17E-06	2.07E-04	1.99E-05
Te-127	2.51E-10	1.14E-10	5.52E-11	1.77E-10	9.10E-10	1.40E-06	1.01E-05
Te-129m	1.74E-06	8.23E-07	2.81E-07	5.72E-07	6.49E-06	2.47E-04	5.06E-05
Te-129	8.87E-12	4.22E-12	2.20E-12	6.48E-12	3.32E-11	4.12E-07	2.02E-07
Te-131m	1.23E-08	7.51E-09	5.03E-09	9.06E-09	5.49E-08	2.97E-05	7.76E-05
Te-131	1.97E-12	1.04E-12	6.30E-13	1.55E-12	7.72E-12	2.92E-07	1.89E-09

Table 9-9 (contd). Inhalation Dose Factors for the Teenager Age Group

Nuclide	Bone	Liver	T.Body	Thyroid	Kidney	Lung	GI-LLI
Te-132	4.50E-08	3.63E-08	2.74E-08	3.07E-08	2.44E-07	5.61E-05	5.79E-05
I-130	7.80E-07	2.24E-06	8.96E-07	1.86E-04	3.44E-06	No Data	1.14E-06
I-131	4.43E-06	6.14E-06	3.30E-06	1.83E-03	1.05E-05	No Data	8.11E-07
I-132	1.99E-07	5.47E-07	1.97E-07	1.89E-05	8.65E-07	No Data	1.59E-07
I-133	1.52E-06	2.56E-06	7.78E-07	3.65E-04	4.49E-06	No Data	1.29E-06
I-134	1.11E-07	2.90E-07	1.05E-07	4.94E-06	4.58E-07	No Data	2.55E-09
I-135	4.62E-07	1.18E-06	4.36E-07	7.76E-05	1.86E-06	No Data	8.69E-07
Cs-134	6.28E-05	1.41E-04	6.86E-05	No Data	4.69E-05	1.83E-05	1.22E-06
Cs-136	6.44E-06	2.42E-05	1.71E-05	No Data	1.38E-05	2.22E-06	1.36E-06
Cs-137	8.38E-05	1.06E-04	3.89E-05	No Data	3.80E-05	1.51E-05	1.06E-06
Cs-138	5.82E-08	1.07E-07	5.58E-08	No Data	8.28E-08	9.84E-09	3.38E-11
Ba-139	1.67E-10	1.18E-13	4.87E-12	No Data	1.11E-13	8.08E-07	8.06E-07
Ba-140	6.84E-06	8.38E-09	4.40E-07	No Data	2.85E-09	2.54E-04	2.86E-05
Ba-141	1.78E-11	1.32E-14	5.93E-13	No Data	1.23E-14	4.11E-07	9.33E-14
Ba-142	4.62E-12	4.63E-15	2.84E-13	No Data	3.92E-15	2.39E-07	5.99E-20
La-140	5.99E-08	2.95E-08	7.82E-09	No Data	No Data	2.68E-05	6.09E-05
La-142	1.20E-10	5.31E-11	1.32E-11	No Data	No Data	1.27E-06	1.50E-06
Ce-141	3.55E-06	2.37E-06	2.71E-07	No Data	1.11E-06	7.67E-05	1.58E-05
Ce-143	3.32E-08	2.42E-08	2.70E-09	No Data	1.08E-08	1.63E-05	3.19E-05
Ce-144	6.11E-04	2.53E-04	3.28E-05	No Data	1.51E-04	1.67E-03	1.08E-04
Pr-143	1.67E-06	6.64E-07	8.28E-08	No Data	3.86E-07	6.04E-05	2.67E-05
Pr-144	5.37E-12	2.20E-12	2.72E-13	No Data	1.26E-12	2.19E-07	2.94E-14
Nd-147	9.83E-07	1.07E-06	6.41E-08	No Data	6.28E-07	4.65E-05	2.28E-05
W-187	1.50E-09	1.22E-09	4.29E-10	No Data	No Data	5.92E-06	2.21E-05
Np-239	4.23E-08	3.99E-09	2.21E-09	No Data	1.25E-08	8.11E-06	1.65E-05

Table 9-10. Inhalation Dose Factors for the Adult Age Group

Nuclide	Bone	Liver	T. Body	Thyroid	Kidney	Lung	GI-LLI
H-3	No Data	1.58E-07	1.58E-07	1.58E-07	1.58E-07	1.58E-07	1.58E-07
C-14	2.27E-06	4.26E-07	4.26E-07	4.26E-07	4.26E-07	4.26E-07	4.26E-07
Na-24	1.28E-06	1.28E-06	1.28E-06	1.28E-06	1.28E-06	1.28E-06	1.28E-06
P-32	1.65E-04	9.64E-06	6.26E-06	No Data	No Data	No Data	1.08E-05
Cr-51	No Data	No Data	1.25E-08	7.44E-09	2.85E-09	1.80E-06	4.15E-07
Mn-54	No Data	4.95E-06	7.87E-07	No Data	1.23E-06	1.75E-04	9.67E-06
Mn-56	No Data	1.55E-10	2.29E-11	No Data	1.63E-10	1.18E-06	2.53E-06
Fe-55	3.07E-06	2.12E-06	4.93E-07	No Data	No Data	9.01E-06	7.54E-07
Fe-59	1.47E-06	3.47E-06	1.32E-06	No Data	No Data	1.27E-04	2.35E-05
Co-58	No Data	1.98E-07	2.59E-07	No Data	No Data	1.16E-04	1.33E-05
Co-60	No Data	1.44E-06	1.85E-06	No Data	No Data	7.46E-04	3.56E-05
Ni-63	5.40E-05	3.93E-06	1.81E-06	No Data	No Data	2.23E-05	1.67E-06
Ni-65	1.92E-10	2.62E-11	1.14E-11	No Data	No Data	7.00E-07	1.54E-06
Cu-64	No Data	1.83E-10	7.69E-11	No Data	5.78E-10	8.48E-07	6.12E-06
Zn-65	4.05E-06	1.29E-05	5.82E-06	No Data	8.62E-06	1.08E-04	6.68E-06
Zn-69	4.23E-12	8.14E-12	5.65E-13	No Data	5.27E-12	1.15E-07	2.04E-09
Br-83	No Data	No Data	3.01E-08	No Data	No Data	No Data	2.90E-08
Br-84	No Data	No Data	3.91E-08	No Data	No Data	No Data	2.05E-13
Br-85	No Data	No Data	1.60E-09	No Data	No Data	No Data	No Data
Rb-86	No Data	1.69E-05	7.37E-06	No Data	No Data	No Data	2.08E-06
Rb-88	No Data	4.84E-08	2.41E-08	No Data	No Data	No Data	4.18E-19
Rb-89	No Data	3.20E-08	2.12E-08	No Data	No Data	No Data	1.16E-21
Sr-89	3.80E-05	No Data	1.09E-06	No Data	No Data	1.75E-04	4.37E-05
Sr-90	1.24E-02	No Data	7.62E-04	No Data	No Data	1.20E-03	9.02E-05
Sr-91	7.74E-09	No Data	3.13E-10	No Data	No Data	4.56E-06	2.39E-05

All values are in (mrem/pCi inhaled). They are obtained from Reference 3 (Table E-7), except as follows: Reference 2 (Table C-1) for Rh-105, Sb-124, and Sb-125.

Table 9-10 (contd). Inhalation Dose Factors for the Adult Age Group

Nuclide	Bone	Liver	T.Body	Thyroid	Kidney	Lung	GI-LLI
Sr-92	8.43E-10	No Data	3.64E-11	No Data	No Data	2.06E-06	5.38E-06
Y-90	2.61E-07	No Data	7.01E-09	No Data	No Data	2.12E-05	6.32E-05
Y-91m	3.26E-11	No Data	1.27E-12	No Data	No Data	2.40E-07	1.66E-10
Y-91	5.78E-05	No Data	1.55E-06	No Data	No Data	2.13E-04	4.81E-05
Y-92	1.29E-09	No Data	3.77E-11	No Data	No Data	1.96E-06	9.19E-06
Y-93	1.18E-08	No Data	3.26E-10	No Data	No Data	6.06E-06	5.27E-05
Zr-95	1.34E-05	4.30E-06	2.91E-06	No Data	6.77E-06	2.21E-04	1.88E-05
Zr-97	1.21E-08	2.45E-09	1.13E-09	No Data	3.71E-09	9.84E-06	6.54E-05
Nb-95	1.76E-06	9.77E-07	5.26E-07	No Data	9.67E-07	6.31E-05	1.30E-05
Mo-99	No Data	1.51E-08	2.87E-09	No Data	3.64E-08	1.14E-05	3.10E-05
Tc-99m	1.29E-13	3.64E-13	4.63E-12	No Data	5.52E-12	9.55E-08	5.20E-07
Tc-101	5.22E-15	7.52E-15	7.38E-14	No Data	1.35E-13	4.99E-08	1.36E-21
Ru-103	1.91E-07	No Data	8.23E-08	No Data	7.29E-07	6.31E-05	1.38E-05
Ru-105	9.88E-11	No Data	3.89E-11	No Data	1.27E-10	1.37E-06	6.02E-06
Ru-106	8.64E-06	No Data	1.09E-06	No Data	1.67E-05	1.17E-03	1.14E-04
Rh-105	9.24E-10	6.73E-10	4.43E-10	No Data	2.86E-09	2.41E-06	1.09E-05
Ag-110m	1.35E-06	1.25E-06	7.43E-07	No Data	2.46E-06	5.79E-04	3.78E-05
Sb-124	3.90E-06	7.36E-08	1.55E-06	9.44E-09	No Data	3.10E-04	5.08E-05
Sb-125	8.26E-06	8.91E-08	1.66E-06	7.34E-09	No Data	2.75E-04	1.26E-05
Te-125m	4.27E-07	1.98E-07	5.84E-08	1.31E-07	1.55E-06	3.92E-05	8.83E-06
Te-127m	1.58E-06	7.21E-07	1.96E-07	4.11E-07	5.72E-06	1.20E-04	1.87E-05
Te-127	1.75E-10	8.03E-11	3.87E-11	1.32E-10	6.37E-10	8.14E-07	7.17E-06
Te-129m	1.22E-06	5.84E-07	1.98E-07	4.30E-07	4.57E-06	1.45E-04	4.79E-05
Te-129	6.22E-12	2.99E-12	1.55E-12	4.87E-12	2.34E-11	2.42E-07	1.96E-08
Te-131m	8.74E-09	5.45E-09	3.63E-09	6.88E-09	3.86E-08	1.82E-05	6.95E-05
Te-131	1.39E-12	7.44E-13	4.49E-13	1.17E-12	5.46E-12	1.74E-07	2.30E-09

Table 9-10 (contd). Inhalation Dose Factors for the Adult Age Group

Nuclide	Bone	Liver	T.Body	Thyroid	Kidney	Lung	GI-LLI
Te-132	3.25E-08	2.69E-08	2.02E-08	2.37E-08	1.82E-07	3.60E-05	6.37E-05
I-130	5.72E-07	1.68E-06	6.60E-07	1.42E-04	2.61E-06	No Data	9.61E-07
I-131	3.15E-06	4.47E-06	2.56E-06	1.49E-03	7.66E-06	No Data	7.85E-07
I-132	1.45E-07	4.07E-07	1.45E-07	1.43E-05	6.48E-07	No Data	5.08E-08
I-133	1.08E-06	1.85E-06	5.65E-07	2.69E-04	3.23E-06	No Data	1.11E-06
I-134	8.05E-08	2.16E-07	7.69E-08	3.73E-06	3.44E-07	No Data	1.26E-10
I-135	3.35E-07	8.73E-07	3.21E-07	5.60E-05	1.39E-06	No Data	6.56E-07
Cs-134	4.66E-05	1.06E-04	9.10E-05	No Data	3.59E-05	1.22E-05	1.30E-06
Cs-136	4.88E-06	1.83E-05	1.38E-05	No Data	1.07E-05	1.50E-06	1.46E-06
Cs-137	5.98E-05	7.76E-05	5.35E-05	No Data	2.78E-05	9.40E-06	1.05E-06
Cs-138	4.14E-08	7.76E-08	4.05E-08	No Data	6.00E-08	6.07E-09	2.33E-13
Ba-139	1.17E-10	8.32E-14	3.42E-12	No Data	7.78E-14	4.70E-07	1.12E-07
Ba-140	4.88E-06	6.13E-09	3.21E-07	No Data	2.09E-09	1.59E-04	2.73E-05
Ba-141	1.25E-11	9.41E-15	4.20E-13	No Data	8.75E-15	2.42E-07	1.45E-17
Ba-142	3.29E-12	3.38E-15	2.07E-13	No Data	2.86E-15	1.49E-07	1.96E-26
La-140	4.30E-08	2.17E-08	5.73E-09	No Data	No Data	1.70E-05	5.73E-05
La-142	8.54E-11	3.88E-11	9.65E-12	No Data	No Data	7.91E-07	2.64E-07
Ce-141	2.49E-06	1.69E-06	1.91E-07	No Data	7.83E-07	4.52E-05	1.50E-05
Ce-143	2.33E-08	1.72E-08	1.91E-09	No Data	7.60E-09	9.97E-06	2.83E-05
Ce-144	4.29E-04	1.79E-04	2.30E-05	No Data	1.06E-04	9.72E-04	1.02E-04
Pr-143	1.17E-06	4.69E-07	5.80E-08	No Data	2.70E-07	3.51E-05	2.50E-05
Pr-144	3.76E-12	1.56E-12	1.91E-13	No Data	8.81E-13	1.27E-07	2.69E-18
Nd-147	6.59E-07	7.62E-07	4.56E-08	No Data	4.45E-07	2.76E-05	2.16E-05
W-187	1.06E-09	8.85E-10	3.10E-10	No Data	No Data	3.63E-06	1.94E-05
Np-239	2.87E-08	2.82E-09	1.55E-09	No Data	8.75E-09	4.70E-06	1.49E-05

Table 9-11. Ingestion Dose Factors for the Infant Age Group

Nuclide	Bone	Liver	T.Body	Thyroid	Kidney	Lung	GI-LLI
H-3	No Data	3.08E-07	3.08E-07	3.08E-07	3.08E-07	3.08E-07	3.08E-07
C-14	2.37E-05	5.06E-06	5.06E-06	5.06E-06	5.06E-06	5.06E-06	5.06E-06
Na-24	1.01E-05	1.01E-05	1.01E-05	1.01E-05	1.01E-05	1.01E-05	1.01E-05
P-32	1.70E-03	1.00E-04	6.59E-05	No Data	No Data	No Data	2.30E-05
Cr-51	No Data	No Data	1.41E-08	9.20E-09	2.01E-09	1.79E-08	4.11E-07
Mn-54	No Data	1.99E-05	4.51E-06	No Data	4.41E-06	No Data	7.31E-06
Mn-56	No Data	8.18E-07	1.41E-07	No Data	7.03E-07	No Data	7.43E-05
Fe-55	1.39E-05	8.98E-06	2.40E-06	No Data	No Data	4.39E-06	1.14E-06
Fe-59	3.08E-05	5.38E-05	2.12E-05	No Data	No Data	1.59E-05	2.57E-05
Co-58	No Data	3.60E-06	8.98E-06	No Data	No Data	No Data	8.97E-06
Co-60	No Data	1.08E-05	2.55E-05	No Data	No Data	No Data	2.57E-05
Ni-63	6.34E-04	3.92E-05	2.20E-05	No Data	No Data	No Data	1.95E-06
Ni-65	4.70E-06	5.32E-07	2.42E-07	No Data	No Data	No Data	4.05E-05
Cu-64	No Data	6.09E-07	2.82E-07	No Data	1.03E-06	No Data	1.25E-05
Zn-65	1.84E-05	6.31E-05	2.91E-05	No Data	3.06E-05	No Data	5.33E-05
Zn-69	9.33E-08	1.68E-07	1.25E-08	No Data	6.98E-08	No Data	1.37E-05
Br-83	No Data	No Data	3.63E-07	No Data	No Data	No Data	No Data
Br-84	No Data	No Data	3.82E-07	No Data	No Data	No Data	No Data
Br-85	No Data	No Data	1.94E-08	No Data	No Data	No Data	No Data
Rb-86	No Data	1.70E-04	8.40E-05	No Data	No Data	No Data	4.35E-06
Rb-88	No Data	4.98E-07	2.73E-07	No Data	No Data	No Data	4.85E-07
Rb-89	No Data	2.86E-07	1.97E-07	No Data	No Data	No Data	9.74E-08
Sr-89	2.51E-03	No Data	7.20E-05	No Data	No Data	No Data	5.16E-05
Sr-90	1.85E-02	No Data	4.71E-03	No Data	No Data	No Data	2.31E-04
Sr-91	5.00E-05	No Data	1.81E-06	No Data	No Data	No Data	5.92E-05

All values are in (mrem/pCi ingested). They are obtained from Reference 3 (Table E-14). Neither Reference 2 nor Reference 3 contains data for Rh-105, Sb-124, or Sb-125.

Table 9-11 (contd). Ingestion Dose Factors for the Infant Age Group

Nuclide	Bone	Liver	T.Body	Thyroid	Kidney	Lung	GI-LLI
Sr-92	1.92E-05	No Data	7.13E-07	No Data	No Data	No Data	2.07E-04
Y-90	8.69E-08	No Data	2.33E-09	No Data	No Data	No Data	1.20E-04
Y-91m	8.10E-10	No Data	2.76E-11	No Data	No Data	No Data	2.70E-06
Y-91	1.13E-06	No Data	3.01E-08	No Data	No Data	No Data	8.10E-05
Y-92	7.65E-09	No Data	2.15E-10	No Data	No Data	No Data	1.46E-04
Y-93	2.43E-08	No Data	6.62E-10	No Data	No Data	No Data	1.92E-04
Zr-95	2.06E-07	5.02E-08	3.56E-08	No Data	5.41E-08	No Data	2.50E-05
Zr-97	1.48E-08	2.54E-09	1.16E-09	No Data	2.56E-09	No Data	1.62E-04
Nb-95	4.20E-08	1.73E-08	1.00E-08	No Data	1.24E-08	No Data	1.46E-05
Mo-99	No Data	3.40E-05	6.63E-06	No Data	5.08E-05	No Data	1.12E-05
Tc-99m	1.92E-09	3.96E-09	5.10E-08	No Data	4.26E-08	2.07E-09	1.15E-06
Tc-101	2.27E-09	2.86E-09	2.83E-08	No Data	3.40E-08	1.56E-09	4.86E-07
Ru-103	1.48E-06	No Data	4.95E-07	No Data	3.08E-06	No Data	1.80E-05
Ru-105	1.36E-07	No Data	4.58E-08	No Data	1.00E-06	No Data	5.41E-05
Ru-106	2.41E-05	No Data	3.01E-06	No Data	2.85E-05	No Data	1.83E-04
Rh-105	No Data	No Data	No Data	No Data	No Data	No Data	No Data
Ag-110m	9.96E-07	7.27E-07	4.81E-07	No Data	1.04E-06	No Data	3.77E-05
Sb-124	No Data	No Data	No Data	No Data	No Data	No Data	No Data
Sb-125	No Data	No Data	No Data	No Data	No Data	No Data	No Data
Te-125m	2.33E-05	7.79E-06	3.15E-06	7.84E-06	No Data	No Data	1.11E-05
Te-127m	5.85E-05	1.94E-05	7.08E-06	1.69E-05	1.44E-04	No Data	2.36E-05
Te-127	1.00E-06	3.35E-07	2.15E-07	8.14E-07	2.44E-06	No Data	2.10E-05
Te-129m	1.00E-04	3.43E-05	1.54E-05	3.84E-05	2.50E-04	No Data	5.97E-05
Te-129	2.84E-07	9.79E-08	6.63E-08	2.38E-07	7.07E-07	No Data	2.27E-05
Te-131m	1.52E-05	6.12E-06	5.05E-06	1.24E-05	4.21E-05	No Data	1.03E-04
Te-131	1.76E-07	6.50E-08	4.94E-08	1.57E-07	4.50E-07	No Data	7.11E-06

Table 9-11 (contd). Ingestion Dose Factors for the Infant Age Group

Nuclide	Bone	Liver	T.Body	Thyroid	Kidney	Lung	GI-LLI
Te-132	2.08E-05	1.03E-05	9.61E-06	1.52E-05	6.44E-05	No Data	3.81E-05
I-130	6.00E-06	1.32E-05	5.30E-06	1.48E-03	1.45E-05	No Data	2.83E-06
I-131	3.59E-05	4.23E-05	1.86E-05	1.39E-02	4.94E-05	No Data	1.51E-06
I-132	1.66E-06	3.37E-06	1.20E-06	1.58E-04	3.76E-06	No Data	2.73E-06
I-133	1.25E-05	1.82E-05	5.33E-06	3.31E-03	2.14E-05	No Data	3.08E-06
I-134	8.69E-07	1.78E-06	6.33E-07	4.15E-05	1.99E-06	No Data	1.84E-06
I-135	3.64E-06	7.24E-06	2.64E-06	6.49E-04	8.07E-06	No Data	2.62E-06
Cs-134	3.77E-04	7.03E-04	7.10E-05	No Data	1.81E-04	7.42E-05	1.91E-06
Cs-136	4.59E-05	1.35E-04	5.04E-05	No Data	5.38E-05	1.10E-05	2.05E-06
Cs-137	5.22E-04	6.11E-04	4.33E-05	No Data	1.64E-04	6.64E-05	1.91E-06
Cs-138	4.81E-07	7.82E-07	3.79E-07	No Data	3.90E-07	6.09E-08	1.25E-06
Ba-139	8.81E-07	5.84E-10	2.55E-08	No Data	3.51E-10	3.54E-10	5.58E-05
Ba-140	1.71E-04	1.71E-07	8.81E-06	No Data	4.06E-08	1.05E-07	4.20E-05
Ba-141	4.25E-07	2.91E-10	1.34E-08	No Data	1.75E-10	1.77E-10	5.19E-06
Ba-142	1.84E-07	1.53E-10	9.06E-09	No Data	8.81E-11	9.26E-11	7.59E-07
La-140	2.11E-08	8.32E-09	2.14E-09	No Data	No Data	No Data	9.77E-05
La-142	1.10E-09	4.04E-10	9.67E-11	No Data	No Data	No Data	6.86E-05
Ce-141	7.87E-08	4.80E-08	5.65E-09	No Data	1.48E-08	No Data	2.48E-05
Ce-143	1.48E-08	9.82E-06	1.12E-09	No Data	2.86E-09	No Data	5.73E-05
Ce-144	2.98E-06	1.22E-06	1.67E-07	No Data	4.93E-07	No Data	1.71E-04
Pr-143	8.13E-08	3.04E-08	4.03E-09	No Data	1.13E-08	No Data	4.29E-05
Pr-144	2.74E-10	1.06E-10	1.38E-11	No Data	3.84E-11	No Data	4.93E-06
Nd-147	5.53E-08	5.68E-08	3.48E-09	No Data	2.19E-08	No Data	3.60E-05
W-187	9.03E-07	6.28E-07	2.17E-07	No Data	No Data	No Data	3.69E-05
Np-239	1.11E-08	9.93E-10	5.61E-10	No Data	1.98E-09	No Data	2.87E-05

Table 9-12. Ingestion Dose Factors for the Child Age Group

Nuclide	Bone	Liver	T. Body	Thyroid	Kidney	Lung	GI-LLI
H-3	No Data	2.03E-07	2.03E-07	2.03E-07	2.03E-07	2.03E-07	2.03E-07
C-14	1.21E-05	2.42E-06	2.42E-06	2.42E-06	2.42E-06	2.42E-06	2.42E-06
Na-24	5.80E-06	5.80E-06	5.80E-06	5.80E-06	5.80E-06	5.80E-06	5.80E-06
P-32	8.25E-04	3.86E-05	3.18E-05	No Data	No Data	No Data	2.28E-05
Cr-51	No Data	No Data	8.90E-09	4.94E-09	1.35E-09	9.02E-09	4.72E-07
Mn-54	No Data	1.07E-05	2.85E-06	No Data	3.00E-06	No Data	8.98E-06
Mn-56	No Data	3.34E-07	7.54E-08	No Data	4.04E-07	No Data	4.84E-05
Fe-55	1.15E-05	6.10E-06	1.89E-06	No Data	No Data	3.45E-06	1.13E-06
Fe-59	1.65E-05	2.67E-05	1.33E-05	No Data	No Data	7.74E-06	2.78E-05
Co-58	No Data	1.80E-06	5.51E-06	No Data	No Data	No Data	1.05E-05
Co-60	No Data	5.29E-06	1.56E-05	No Data	No Data	No Data	2.93E-05
Ni-63	5.38E-04	2.88E-05	1.83E-05	No Data	No Data	No Data	1.94E-06
Ni-65	2.22E-06	2.09E-07	1.22E-07	No Data	No Data	No Data	2.56E-05
Cu-64	No Data	2.45E-07	1.48E-07	No Data	5.92E-07	No Data	1.15E-05
Zn-65	1.37E-05	3.65E-05	2.27E-05	No Data	2.30E-05	No Data	6.41E-06
Zn-69	4.38E-08	6.33E-08	5.85E-09	No Data	3.84E-08	No Data	3.99E-06
Br-83	No Data	No Data	1.71E-07	No Data	No Data	No Data	No Data
Br-84	No Data	No Data	1.98E-07	No Data	No Data	No Data	No Data
Br-85	No Data	No Data	9.12E-09	No Data	No Data	No Data	No Data
Rb-86	No Data	6.70E-05	4.12E-05	No Data	No Data	No Data	4.31E-06
Rb-88	No Data	1.90E-07	1.32E-07	No Data	No Data	No Data	9.32E-09
Rb-89	No Data	1.17E-07	1.04E-07	No Data	No Data	No Data	1.02E-09
Sr-89	1.32E-03	No Data	3.77E-05	No Data	No Data	No Data	5.11E-05
Sr-90	1.70E-02	No Data	4.31E-03	No Data	No Data	No Data	2.29E-04
Sr-91	2.40E-05	No Data	9.06E-07	No Data	No Data	No Data	5.30E-05

All values are in (mrem/pCi ingested). They are obtained from Reference 3 (Table E-13). Neither Reference 2 nor Reference 3 contains data for Rh-105, Sb-124, or Sb-125.

Table 9-12 (contd). Ingestion Dose Factors for the Child Age Group

Nuclide	Bone	Liver	T.Body	Thyroid	Kidney	Lung	GI-LLI
Sr-92	9.03E-06	No Data	3.62E-07	No Data	No Data	No Data	1.71E-04
Y-90	4.11E-08	No Data	1.10E-09	No Data	No Data	No Data	1.17E-04
Y-91m	3.82E-10	No Data	1.39E-11	No Data	No Data	No Data	7.48E-07
Y-91	6.02E-07	No Data	1.61E-08	No Data	No Data	No Data	8.02E-05
Y-92	3.60E-09	No Data	1.03E-10	No Data	No Data	No Data	1.04E-04
Y-93	1.14E-08	No Data	3.13E-10	No Data	No Data	No Data	1.70E-04
Zr-95	1.16E-07	2.55E-08	2.27E-08	No Data	3.65E-08	No Data	2.66E-05
Zr-97	6.99E-09	1.01E-09	5.96E-10	No Data	1.45E-09	No Data	1.53E-04
Nb-95	2.25E-08	8.76E-09	6.26E-09	No Data	8.23E-09	No Data	1.62E-05
Mo-99	No Data	1.33E-05	3.29E-06	No Data	2.84E-05	No Data	1.10E-05
Tc-99m	9.23E-10	1.81E-09	3.00E-08	No Data	2.63E-08	9.19E-10	1.03E-06
Tc-101	1.07E-09	1.12E-09	1.42E-08	No Data	1.91E-08	5.92E-10	3.56E-09
Ru-103	7.31E-07	No Data	2.81E-07	No Data	1.84E-06	No Data	1.89E-05
Ru-105	6.45E-08	No Data	2.34E-08	No Data	5.67E-07	No Data	4.21E-05
Ru-106	1.17E-05	No Data	1.46E-06	No Data	1.58E-05	No Data	1.82E-04
Rh-105	No Data	No Data	No Data	No Data	No Data	No Data	No Data
Ag-110m	5.39E-07	3.64E-07	2.91E-07	No Data	6.78E-07	No Data	4.33E-05
Sb-124	No Data	No Data	No Data	No Data	No Data	No Data	No Data
Sb-125	No Data	No Data	No Data	No Data	No Data	No Data	No Data
Te-125m	1.14E-05	3.09E-06	1.52E-06	3.20E-06	No Data	No Data	1.10E-05
Te-127m	2.89E-05	7.78E-06	3.43E-06	6.91E-06	8.24E-05	No Data	2.34E-05
Te-127	4.71E-07	1.27E-07	1.01E-07	3.26E-07	1.34E-06	No Data	1.84E-05
Te-129m	4.87E-05	1.36E-05	7.56E-06	1.57E-05	1.43E-04	No Data	5.94E-05
Te-129	1.34E-07	3.74E-08	3.18E-08	9.56E-08	3.92E-07	No Data	8.34E-06
Te-131m	7.20E-06	2.49E-06	2.65E-06	5.12E-06	2.41E-05	No Data	1.01E-04
Te-131	8.30E-08	2.53E-08	2.47E-08	6.35E-08	2.51E-07	No Data	4.36E-07

Table 9-12 (contd). Ingestion Dose Factors for the Child Age Group

Nuclide	Bone	Liver	T.Body	Thyroid	Kidney	Lung	GI-LLI
Te-132	1.01E-05	4.47E-06	5.40E-06	6.51E-06	4.15E-05	No Data	4.50E-05
I-130	2.92E-06	5.90E-06	3.04E-06	6.50E-04	8.82E-06	No Data	2.76E-06
I-131	1.72E-05	1.73E-05	9.83E-06	5.72E-03	2.84E-05	No Data	1.54E-06
I-132	8.00E-07	1.47E-06	6.76E-07	6.82E-05	2.25E-06	No Data	1.73E-06
I-133	5.92E-06	7.32E-06	2.77E-06	1.36E-03	1.22E-05	No Data	2.95E-06
I-134	4.19E-07	7.78E-07	3.58E-07	1.79E-05	1.19E-06	No Data	5.16E-07
I-135	1.75E-06	3.15E-06	1.49E-06	2.79E-04	4.83E-06	No Data	2.40E-06
Cs-134	2.34E-04	3.84E-04	8.10E-05	No Data	1.19E-04	4.27E-05	2.07E-06
Cs-136	2.35E-05	6.46E-05	4.18E-05	No Data	3.44E-05	5.13E-06	2.27E-06
Cs-137	3.27E-04	3.13E-04	4.62E-05	No Data	1.02E-04	3.67E-05	1.96E-06
Cs-138	2.28E-07	3.17E-07	2.01E-07	No Data	2.23E-07	2.40E-08	1.46E-07
Ba-139	4.14E-07	2.21E-10	1.20E-08	No Data	1.93E-10	1.30E-10	2.39E-05
Ba-140	8.31E-05	7.28E-08	4.85E-06	No Data	2.37E-08	4.34E-08	4.21E-05
Ba-141	2.00E-07	1.12E-10	6.51E-09	No Data	9.69E-11	6.58E-10	1.14E-07
Ba-142	8.74E-08	6.29E-11	4.88E-09	No Data	5.09E-11	3.70E-11	1.14E-09
La-140	1.01E-08	3.53E-09	1.19E-09	No Data	No Data	No Data	9.84E-05
La-142	5.24E-10	1.67E-10	5.23E-11	No Data	No Data	No Data	3.31E-05
Ce-141	3.97E-08	1.98E-08	2.94E-09	No Data	8.68E-09	No Data	2.47E-05
Ce-143	6.99E-09	3.79E-06	5.49E-10	No Data	1.59E-09	No Data	5.55E-05
Ce-144	2.08E-06	6.52E-07	1.11E-07	No Data	3.61E-07	No Data	1.70E-04
Pr-143	3.93E-08	1.18E-08	1.95E-09	No Data	6.39E-09	No Data	4.24E-05
Pr-144	1.29E-10	3.99E-11	6.49E-12	No Data	2.11E-11	No Data	8.59E-08
Nd-147	2.79E-08	2.26E-08	1.75E-09	No Data	1.24E-08	No Data	3.58E-05
W-187	4.29E-07	2.54E-07	1.14E-07	No Data	No Data	No Data	3.57E-05
Np-239	5.25E-09	3.77E-10	2.65E-10	No Data	1.09E-09	No Data	2.79E-05

Table 9-13. Ingestion Dose Factors for the Teenager Age Group

Nuclide	Bone	Liver	T. Body	Thyroid	Kidney	Lung	GI-LLI
H-3	No Data	1.06E-07	1.06E-07	1.06E-07	1.06E-07	1.06E-07	1.06E-07
C-14	4.06E-06	8.12E-07	8.12E-07	8.12E-07	8.12E-07	8.12E-07	8.12E-07
Na-24	2.30E-06	2.30E-06	2.30E-06	2.30E-06	2.30E-06	2.30E-06	2.30E-06
P-32	2.76E-04	1.71E-05	1.07E-05	No Data	No Data	No Data	2.32E-05
Cr-51	No Data	No Data	3.60E-09	2.00E-09	7.89E-10	5.14E-09	6.05E-07
Mn-54	No Data	5.90E-06	1.17E-06	No Data	1.76E-06	No Data	1.21E-05
Mn-56	No Data	1.58E-07	2.81E-08	No Data	2.00E-07	No Data	1.04E-05
Fe-55	3.78E-06	2.68E-06	6.25E-07	No Data	No Data	1.70E-06	1.16E-06
Fe-59	5.87E-06	1.37E-05	5.29E-06	No Data	No Data	4.32E-06	3.24E-05
Co-58	No Data	9.72E-07	2.24E-06	No Data	No Data	No Data	1.34E-05
Co-60	No Data	2.81E-06	6.33E-06	No Data	No Data	No Data	3.66E-05
Ni-63	1.77E-04	1.25E-05	6.00E-06	No Data	No Data	No Data	1.99E-06
Ni-65	7.49E-07	9.57E-08	4.36E-08	No Data	No Data	No Data	5.19E-06
Cu-64	No Data	1.15E-07	5.41E-08	No Data	2.91E-07	No Data	8.92E-06
Zn-65	5.76E-06	2.00E-05	9.33E-06	No Data	1.28E-05	No Data	8.47E-06
Zn-69	1.47E-08	2.80E-08	1.96E-09	No Data	1.83E-08	No Data	5.16E-08
Br-83	No Data	No Data	5.74E-08	No Data	No Data	No Data	No Data
Br-84	No Data	No Data	7.22E-08	No Data	No Data	No Data	No Data
Br-85	No Data	No Data	3.05E-09	No Data	No Data	No Data	No Data
Rb-86	No Data	2.98E-05	1.40E-05	No Data	No Data	No Data	4.41E-06
Rb-88	No Data	8.52E-08	4.54E-08	No Data	No Data	No Data	7.30E-15
Rb-89	No Data	5.50E-08	3.89E-08	No Data	No Data	No Data	8.43E-17
Sr-89	4.40E-04	No Data	1.26E-05	No Data	No Data	No Data	5.24E-05
Sr-90	8.30E-03	No Data	2.05E-03	No Data	No Data	No Data	2.33E-04
Sr-91	8.07E-06	No Data	3.21E-07	No Data	No Data	No Data	3.66E-05

All values are in (mrem/pCi ingested). They are obtained from Reference 3 (Table E-12). Neither Reference 2 nor Reference 3 contains data for Rh-105, Sb-124, or Sb-125.

Table 9-13 (contd). Ingestion Dose Factors for the Teenager Age Group

Nuclide	Bone	Liver	T.Body	Thyroid	Kidney	Lung	GI-LLI
Sr-92	3.05E-06	No Data	1.30E-07	No Data	No Data	No Data	7.77E-05
Y-90	1.37E-08	No Data	3.69E-10	No Data	No Data	No Data	1.13E-04
Y-91m	1.29E-10	No Data	4.93E-12	No Data	No Data	No Data	6.09E-09
Y-91	2.01E-07	No Data	5.39E-09	No Data	No Data	No Data	8.24E-05
Y-92	1.21E-09	No Data	3.50E-11	No Data	No Data	No Data	3.32E-05
Y-93	3.83E-09	No Data	1.05E-10	No Data	No Data	No Data	1.17E-04
Zr-95	4.12E-08	1.30E-08	8.94E-09	No Data	1.91E-08	No Data	3.00E-05
Zr-97	2.37E-09	4.69E-10	2.16E-10	No Data	7.11E-10	No Data	1.27E-04
Nb-95	8.22E-09	4.56E-09	2.51E-09	No Data	4.42E-09	No Data	1.95E-05
Mo-99	No Data	6.03E-06	1.15E-06	No Data	1.38E-05	No Data	1.08E-05
Tc-99m	3.32E-10	9.26E-10	1.20E-08	No Data	1.38E-08	5.14E-10	6.08E-07
Tc-101	3.60E-10	5.12E-10	5.03E-09	No Data	9.26E-09	3.12E-10	8.75E-17
Ru-103	2.55E-07	No Data	1.09E-07	No Data	8.99E-07	No Data	2.13E-05
Ru-105	2.18E-08	No Data	8.46E-09	No Data	2.75E-07	No Data	1.76E-05
Ru-106	3.92E-06	No Data	4.94E-07	No Data	7.56E-06	No Data	1.88E-04
Rh-105	No Data	No Data	No Data	No Data	No Data	No Data	No Data
Ag-110m	2.05E-07	1.94E-07	1.18E-07	No Data	3.70E-07	No Data	5.45E-05
Sb-124	No Data	No Data	No Data	No Data	No Data	No Data	No Data
Sb-125	No Data	No Data	No Data	No Data	No Data	No Data	No Data
Te-125m	3.83E-06	1.38E-06	5.12E-07	1.07E-06	No Data	No Data	1.13E-05
Te-127m	9.67E-06	3.43E-06	1.15E-06	2.30E-06	3.92E-05	No Data	2.41E-05
Te-127	1.58E-07	5.60E-08	3.40E-08	1.09E-07	6.40E-07	No Data	1.22E-05
Te-129m	1.63E-05	6.05E-06	2.58E-06	5.26E-06	6.82E-05	No Data	6.12E-05
Te-129	4.48E-08	1.67E-08	1.09E-08	3.20E-08	1.88E-07	No Data	2.45E-07
Te-131m	2.44E-06	1.17E-06	9.76E-07	1.76E-06	1.22E-05	No Data	9.39E-05
Te-131	2.79E-08	1.15E-08	8.72E-09	2.15E-08	1.22E-07	No Data	2.29E-09

Table 9-13 (contd). Ingestion Dose Factors for the Teenager Age Group

Nuclide	Bone	Liver	T.Body	Thyroid	Kidney	Lung	GI-LLI
Te-132	3.49E-06	2.21E-06	2.08E-06	2.33E-06	2.12E-05	No Data	7.00E-05
I-130	1.03E-06	2.98E-06	1.19E-06	2.43E-04	4.59E-06	No Data	2.29E-06
I-131	5.85E-06	8.19E-06	4.40E-06	2.39E-03	1.41E-05	No Data	1.62E-06
I-132	2.79E-07	7.30E-07	2.62E-07	2.46E-05	1.15E-06	No Data	3.18E-07
I-133	2.01E-06	3.41E-06	1.04E-06	4.76E-04	5.98E-06	No Data	2.58E-06
I-134	1.46E-07	3.87E-07	1.39E-07	6.45E-06	6.10E-07	No Data	5.10E-09
I-135	6.10E-07	1.57E-06	5.82E-07	1.01E-04	2.48E-06	No Data	1.74E-06
Cs-134	8.37E-05	1.97E-04	9.14E-05	No Data	6.26E-05	2.39E-05	2.45E-06
Cs-136	8.59E-06	3.38E-05	2.27E-05	No Data	1.84E-05	2.90E-06	2.72E-06
Cs-137	1.12E-04	1.49E-04	5.19E-05	No Data	5.07E-05	1.97E-05	2.12E-06
Cs-138	7.76E-08	1.49E-07	7.45E-08	No Data	1.10E-07	1.28E-08	6.76E-11
Ba-139	1.39E-07	9.78E-11	4.05E-09	No Data	9.22E-11	6.74E-11	1.24E-06
Ba-140	2.84E-05	3.48E-08	1.83E-06	No Data	1.18E-08	2.34E-08	4.38E-05
Ba-141	6.71E-08	5.01E-11	2.24E-09	No Data	4.65E-11	3.43E-11	1.43E-13
Ba-142	2.99E-08	2.99E-11	1.84E-09	No Data	2.53E-11	1.99E-11	9.18E-20
La-140	3.48E-09	1.71E-09	4.55E-10	No Data	No Data	No Data	9.82E-05
La-142	1.79E-10	7.95E-11	1.98E-11	No Data	No Data	No Data	2.42E-06
Ce-141	1.33E-08	8.88E-09	1.02E-09	No Data	4.18E-09	No Data	2.54E-05
Ce-143	2.35E-09	1.71E-06	1.91E-10	No Data	7.67E-10	No Data	5.14E-05
Ce-144	6.96E-07	2.88E-07	3.74E-08	No Data	1.72E-07	No Data	1.75E-04
Pr-143	1.31E-08	5.23E-09	6.52E-10	No Data	3.04E-09	No Data	4.31E-05
Pr-144	4.30E-11	1.76E-11	2.18E-12	No Data	1.01E-11	No Data	4.74E-14
Nd-147	9.38E-09	1.02E-08	6.11E-10	No Data	5.99E-09	No Data	3.68E-05
W-187	1.46E-07	1.19E-07	4.17E-08	No Data	No Data	No Data	3.22E-05
Np-239	1.76E-09	1.66E-10	9.22E-11	No Data	5.21E-10	No Data	2.67E-05

Table 9-14. Ingestion Dose Factors for the Adult Age Group

Nuclide	Bone	Liver	T. Body	Thyroid	Kidney	Lung	GI-LLI
H-3	No Data	1.05E-07	1.05E-07	1.05E-07	1.05E-07	1.05E-07	1.05E-07
C-14	2.84E-06	5.68E-07	5.68E-07	5.68E-07	5.68E-07	5.68E-07	5.68E-07
Na-24	1.70E-06	1.70E-06	1.70E-06	1.70E-06	1.70E-06	1.70E-06	1.70E-06
P-32	1.93E-04	1.20E-05	7.46E-06	No Data	No Data	No Data	2.17E-05
Cr-51	No Data	No Data	2.66E-09	1.59E-09	5.86E-10	3.53E-09	6.69E-07
Mn-54	No Data	4.57E-06	8.72E-07	No Data	1.36E-06	No Data	1.40E-05
Mn-56	No Data	1.15E-07	2.04E-08	No Data	1.46E-07	No Data	3.67E-06
Fe-55	2.75E-06	1.90E-06	4.43E-07	No Data	No Data	1.06E-06	1.09E-06
Fe-59	4.34E-06	1.02E-05	3.91E-06	No Data	No Data	2.85E-06	3.40E-05
Co-58	No Data	7.45E-07	1.67E-06	No Data	No Data	No Data	1.51E-05
Co-60	No Data	2.14E-06	4.72E-06	No Data	No Data	No Data	4.02E-05
Ni-63	1.30E-04	9.01E-06	4.36E-06	No Data	No Data	No Data	1.88E-06
Ni-65	5.28E-07	6.86E-08	3.13E-08	No Data	No Data	No Data	1.74E-06
Cu-64	No Data	8.33E-08	3.91E-08	No Data	2.10E-07	No Data	7.10E-06
Zn-65	4.84E-06	1.54E-05	6.96E-06	No Data	1.03E-05	No Data	9.70E-06
Zn-69	1.03E-08	1.97E-08	1.37E-09	No Data	1.28E-08	No Data	2.96E-09
Br-83	No Data	No Data	4.02E-08	No Data	No Data	No Data	5.79E-08
Br-84	No Data	No Data	5.21E-08	No Data	No Data	No Data	4.09E-13
Br-85	No Data	No Data	2.14E-09	No Data	No Data	No Data	No Data
Rb-86	No Data	2.11E-05	9.83E-06	No Data	No Data	No Data	4.16E-06
Rb-88	No Data	6.05E-08	3.21E-08	No Data	No Data	No Data	8.36E-19
Rb-89	No Data	4.01E-08	2.82E-08	No Data	No Data	No Data	2.33E-21
Sr-89	3.08E-04	No Data	8.84E-06	No Data	No Data	No Data	4.94E-05
Sr-90	7.58E-03	No Data	1.86E-03	No Data	No Data	No Data	2.19E-04
Sr-91	5.67E-06	No Data	2.29E-07	No Data	No Data	No Data	2.70E-05

All values are in (mrem/pCi ingested). They are obtained from Reference 3 (Table E-11), except as follows: Reference 2 (Table A-3) for Rh-105, Sb-124, and Sb-125.

Table 9-14 (contd). Ingestion Dose Factors for the Adult Age Group

Nuclide	Bone	Liver	T.Body	Thyroid	Kidney	Lung	GI-LLI
Sr-92	2.15E-06	No Data	9.30E-08	No Data	No Data	No Data	4.26E-05
Y-90	9.62E-09	No Data	2.58E-10	No Data	No Data	No Data	1.02E-04
Y-91m	9.09E-11	No Data	3.52E-12	No Data	No Data	No Data	2.67E-10
Y-91	1.41E-07	No Data	3.77E-09	No Data	No Data	No Data	7.76E-05
Y-92	8.45E-10	No Data	2.47E-11	No Data	No Data	No Data	1.48E-05
Y-93	2.68E-09	No Data	7.40E-11	No Data	No Data	No Data	8.50E-05
Zr-95	3.04E-08	9.75E-09	6.60E-09	No Data	1.53E-08	No Data	3.09E-05
Zr-97	1.68E-09	3.39E-10	1.55E-10	No Data	5.12E-10	No Data	1.05E-04
Nb-95	6.22E-09	3.46E-09	1.86E-09	No Data	3.42E-09	No Data	2.10E-05
Mo-99	No Data	4.31E-06	8.20E-07	No Data	9.76E-06	No Data	9.99E-06
Tc-99m	2.47E-10	6.98E-10	8.89E-09	No Data	1.06E-08	3.42E-10	4.13E-07
Tc-101	2.54E-10	3.66E-10	3.59E-09	No Data	6.59E-09	1.87E-10	1.10E-21
Ru-103	1.85E-07	No Data	7.97E-08	No Data	7.06E-07	No Data	2.16E-05
Ru-105	1.54E-08	No Data	6.08E-09	No Data	1.99E-07	No Data	9.42E-06
Ru-106	2.75E-06	No Data	3.48E-07	No Data	5.31E-06	No Data	1.78E-04
Rh-105	1.22E-07	8.86E-08	5.83E-08	No Data	3.76E-07	No Data	1.41E-05
Ag-110m	1.60E-07	1.48E-07	8.79E-08	No Data	2.91E-07	No Data	6.04E-05
Sb-124	2.81E-06	5.30E-08	1.11E-06	6.79E-09	No Data	2.18E-06	7.95E-05
Sb-125	2.23E-06	2.40E-08	4.48E-07	1.98E-09	No Data	2.33E-04	1.97E-05
Te-125m	2.68E-06	9.71E-07	3.59E-07	8.06E-07	1.09E-05	No Data	1.07E-05
Te-127m	6.77E-06	2.42E-06	8.25E-07	1.73E-06	2.75E-05	No Data	2.27E-05
Te-127	1.10E-07	3.95E-08	2.38E-08	8.15E-08	4.48E-07	No Data	8.68E-06
Te-129m	1.15E-05	4.29E-06	1.82E-06	3.95E-06	4.80E-05	No Data	5.79E-05
Te-129	3.14E-08	1.18E-08	7.65E-09	2.41E-08	1.32E-07	No Data	2.37E-08
Te-131m	1.73E-06	8.46E-07	7.05E-07	1.34E-06	8.57E-06	No Data	8.40E-05
Te-131	1.97E-08	8.23E-09	6.22E-09	1.62E-08	8.63E-08	No Data	2.79E-09

Table 9-14 (contd). Ingestion Dose Factors for the Adult Age Group

Nuclide	Bone	Liver	T.Body	Thyroid	Kidney	Lung	GI-LLI
Te-132	2.52E-06	1.63E-06	1.53E-06	1.80E-06	1.57E-05	No Data	7.71E-05
I-130	7.56E-07	2.23E-06	8.80E-07	1.89E-04	3.48E-06	No Data	1.92E-06
I-131	4.16E-06	5.95E-06	3.41E-06	1.95E-03	1.02E-05	No Data	1.57E-06
I-132	2.03E-07	5.43E-07	1.90E-07	1.90E-05	8.65E-07	No Data	1.02E-07
I-133	1.42E-06	2.47E-06	7.53E-07	3.63E-04	4.31E-06	No Data	2.22E-06
I-134	1.06E-07	2.88E-07	1.03E-07	4.99E-06	4.58E-07	No Data	2.51E-10
I-135	4.43E-07	1.16E-06	4.28E-07	7.65E-05	1.86E-06	No Data	1.31E-06
Cs-134	6.22E-05	1.48E-04	1.21E-04	No Data	4.79E-05	1.59E-05	2.59E-06
Cs-136	6.51E-06	2.57E-05	1.85E-05	No Data	1.43E-05	1.96E-06	2.92E-06
Cs-137	7.97E-05	1.09E-04	7.14E-05	No Data	3.70E-05	1.23E-05	2.11E-06
Cs-138	5.52E-08	1.09E-07	5.40E-08	No Data	8.01E-08	7.91E-09	4.65E-13
Ba-139	9.70E-08	6.91E-11	2.84E-09	No Data	6.46E-11	3.92E-11	1.72E-07
Ba-140	2.03E-05	2.55E-08	1.33E-06	No Data	8.67E-09	1.46E-08	4.18E-05
Ba-141	4.71E-08	3.56E-11	1.59E-09	No Data	3.31E-11	2.02E-11	2.22E-17
Ba-142	2.13E-08	2.19E-11	1.34E-09	No Data	1.85E-11	1.24E-11	3.00E-26
La-140	2.50E-09	1.26E-09	3.33E-10	No Data	No Data	No Data	9.25E-05
La-142	1.28E-10	5.82E-11	1.45E-11	No Data	No Data	No Data	4.25E-07
Ce-141	9.36E-09	6.33E-09	7.18E-10	No Data	2.94E-09	No Data	2.42E-05
Ce-143	1.65E-09	1.22E-06	1.35E-10	No Data	5.37E-10	No Data	4.56E-05
Ce-144	4.88E-07	2.04E-07	2.62E-08	No Data	1.21E-07	No Data	1.65E-04
Pr-143	9.20E-09	3.69E-09	4.56E-10	No Data	2.13E-09	No Data	4.03E-05
Pr-144	3.01E-11	1.25E-11	1.53E-12	No Data	7.05E-12	No Data	4.33E-18
Nd-147	6.29E-09	7.27E-09	4.35E-10	No Data	4.25E-09	No Data	3.49E-05
W-187	1.03E-07	8.61E-08	3.01E-08	No Data	No Data	No Data	2.82E-05
Np-239	1.19E-09	1.17E-10	6.45E-11	No Data	3.65E-10	No Data	2.40E-05

Table 9-15. External Dose Factors for Standing on Contaminated Ground

Nuclide	T. Body	Skin
H-3	0.00	0.00
C-14	0.00	0.00
Na-24	2.50E-08	2.90E-08
P-32	0.00	0.00
Cr-51	2.20E-10	2.60E-10
Mn-54	5.80E-09	6.80E-09
Mn-56	1.10E-08	1.30E-08
Fe-55	0.00	0.00
Fe-59	8.00E-09	9.40E-09
Co-58	7.00E-09	8.20E-09
Co-60	1.70E-08	2.00E-08
Ni-63	0.00	0.00
Ni-65	3.70E-09	4.30E-09
Cu-64	1.50E-09	1.70E-09
Zn-65	4.00E-09	4.60E-09
Zn-69	0.00	0.00
Br-83	6.40E-11	9.30E-11
Br-84	1.20E-08	1.40E-08
Br-85	0.00	0.00
Rb-86	6.30E-10	7.20E-10
Rb-88	3.50E-09	4.00E-09
Rb-89	1.50E-08	1.80E-08
Sr-89	5.60E-13	6.50E-13
Sr-90	0.00	0.00

Nuclide	T. Body	Skin
Sr-91	7.10E-09	8.30E-09
Sr-92	9.00E-09	1.00E-08
Y-90	2.20E-12	2.60E-12
Y-91m	3.80E-09	4.40E-09
Y-91	2.40E-11	2.70E-11
Y-92	1.60E-09	1.90E-09
Y-93	5.70E-10	7.80E-10
Zr-95	5.00E-09	5.80E-09
Zr-97	5.50E-09	6.40E-09
Nb-95	5.10E-09	6.00E-09
Mo-99	1.90E-09	2.20E-09
Tc-99m	9.60E-10	1.10E-09
Tc-101	2.70E-09	3.00E-09
Ru-103	3.60E-09	4.20E-09
Ru-105	4.50E-09	5.10E-09
Ru-106	1.50E-09	1.80E-09
Rh-105	6.60E-10	7.70E-10
Ag-110m	1.80E-08	2.10E-08
Sb-124	1.30E-08	1.50E-08
Sb-125	3.10E-09	3.50E-09
Te-125m	3.50E-11	4.80E-11
Te-127m	1.10E-12	1.30E-12
Te-127	1.00E-11	1.10E-11
Te-129m	7.70E-10	9.00E-10

All values are in (mrem/h) per (pCi/m^2). They are obtained from Reference 3 (Table E-6), except as follows: Reference 2 (Table A-7) for Rh-105, Sb-124, and Sb-125.

Table 9-15 (contd). External Dose Factors for Standing on Contaminated Ground

Nuclide	T.Body	Skin
Te-129	7.10E-10	8.40E-10
Te-131m	8.40E-09	9.90E-09
Te-131	2.20E-09	2.60E-06
Te-132	1.70E-09	2.00E-09
I-130	1.40E-08	1.70E-08
I-131	2.80E-09	3.40E-09
I-132	1.70E-08	2.00E-08
I-133	3.70E-09	4.50E-09
I-134	1.60E-08	1.90E-08
I-135	1.20E-08	1.40E-08
Cs-134	1.20E-08	1.40E-08
Cs-136	1.50E-08	1.70E-08
Cs-137	4.20E-09	4.90E-09
Cs-138	2.10E-08	2.40E-08
Ba-139	2.40E-09	2.70E-09
Ba-140	2.10E-09	2.40E-09
Ba-141	4.30E-09	4.90E-09
Ba-142	7.90E-09	9.00E-09
La-140	1.50E-08	1.70E-08
La-142	1.50E-08	1.80E-08
Ce-141	5.50E-10	6.20E-10
Ce-143	2.20E-09	2.50E-09
Ce-144	3.20E-10	3.70E-10
Pr-143	0.00	0.00
Pr-144	2.00E-10	2.30E-10
Nd-147	1.00E-09	1.20E-09
W-187	3.10E-09	3.60E-09
Np-239	9.50E-10	1.10E-09

CHAPTER 10

DEFINITIONS OF EFFLUENT CONTROL TERMS

The terms defined in this chapter are used in the presentation of the above chapters. These terms are shown in all capital letters to indicate that they are specifically defined.

10.1 TERMS SPECIFIC TO THE ODCM

The following terms are used in the ODCM, but are not found in the Technical Specifications:

ACTION(S)

An ACTION shall be that part of a control that prescribes remedial measures required under designated conditions.

BATCH RELEASE

A BATCH RELEASE is the discharge of wastes of a discrete volume. Prior to sampling for analyses, each liquid batch shall be isolated and then thoroughly mixed by a method described in the ODCM to assure representative sampling.

COMPOSITE SAMPLE

A COMPOSITE SAMPLE is one which contains material from multiple waste releases, in which the quantity of sample is proportional to the quantity of waste discharged, and in which the method of sampling employed results in a specimen that is representative of the wastes released. Prior to analyses, all liquid samples that are to be aliquotted for a COMPOSITE SAMPLE shall be mixed thoroughly, in order for the COMPOSITE SAMPLE to be representative of the effluent release.

When assessing the consequences of a waste release at the pre-release or post-release stage, the most recent available COMPOSITE SAMPLE results for the applicable release pathway may be used.

CONTINUOUS RELEASE

A CONTINUOUS RELEASE is the discharge of wastes of a non-discrete volume, e.g., from a volume within a system that has an input flow during the continuous release. To be representative of the quantities and concentrations of radioactive materials in CONTINUOUS RELEASES of liquid effluents, samples shall be collected in proportion to the rate of flow of the effluent stream or to the quantity of liquid waste discharged.

FREQUENCY NOTATION

The FREQUENCY NOTATION specified for the performance of surveillance requirements shall correspond to the intervals defined below, with a maximum allowable extension not to exceed 25% of the surveillance interval.

NOTATION	FREQUENCY
S (Once per shift)	At least once per 12 hours.
D (Daily)	At least once per 24 hours.
W (Weekly)	At least once per 7 days.
M (Monthly)	At least once per 31 days.
Q (Quarterly)	At least once per 92 days.
SA (Semi-annually)	At least once per 184 days.
R (Refueling)	At least once per 18 months.
S/U (Startup)	Prior to each reactor startup.
NA	Not applicable.
P (Prior)	Completed prior to each release.

GASEOUS WASTE PROCESSING SYSTEM

A GASEOUS WASTE PROCESSING SYSTEM shall be any system designed and installed to reduce radioactive gaseous effluents by collecting Reactor Coolant System offgases from the Reactor Coolant System and providing for delay or holdup for the purpose of reducing the total radioactivity prior to release to the environment.

LIQUID RADWASTE TREATMENT SYSTEM

A LIQUID RADWASTE TREATMENT SYSTEM is any system designed and installed to reduce radioactive materials in liquid effluents by systematic collection, retention, and processing through filtration, evaporation, separation and/or ion exchange treatment. This system consists of at least one collection tank, one evaporator or demineralizer system, one post-treatment tank and associated components providing for treatment flow and functional control.

MAJOR CHANGES TO RADIOACTIVE WASTE TREATMENT SYSTEMS

For the purposes of the ODCM, MAJOR CHANGES TO RADIOACTIVE WASTE TREATMENT SYSTEMS include the following changes to such systems:

(1) Major changes in process equipment, components, structures, or effluent monitoring instrumentation as described in the Final Safety Analysis Report (FSAR) or as evaluated in the Nuclear

Regulatory Commission staff's Safety Evaluation Report (SER) (e.g., deletion of evaporators and installation of demineralizers);

(2) Changes in the design of radwaste treatment systems that could significantly increase quantities of effluents released from those previously considered in the FSAR and SER;

(3) Changes in system design which may invalidate the accident analysis as described in the SER (e.g., changes in tank capacity that would alter the curies released); or

(4) Changes in system design that could potentially result in a significant increase in occupational exposure of operating personnel (e.g., use of temporary equipment without adequate shielding provisions).

MEMBER(S) OF THE PUBLIC[1]

A MEMBER OF THE PUBLIC means any individual except when that individual is receiving an *occupational dose*.[2] This category may include persons who use portions of the site for recreational, occupational, or other purposes not associated with the plant.

MINIMUM DETECTABLE CONCENTRATION

The MINIMUM DETECTABLE CONCENTRATION (MDC) is defined, for purposes of the controls in this ODCM, as the smallest concentration of radioactive material in a sample that will yield a net count above system background and that will be detected with 95-percent probability, with only 5-percent probability of falsely concluding that a blank observation represents a "real" signal.

For a particular measurement system, which may include radiochemical separation, the MDC for a given radionuclide is determined as follows (Reference 18):

where:

MDC = the *a priori* MINIMUM DETECTABLE CONCENTRATION (μCi per unit mass or volume).

1 The italicized terms in this definition, which are not otherwise used in this ODCM, shall have the definitions assigned to them by 10 CFR 20.1003.

2 Except as delineated in other parts of 10 CFR chapter I.

$$MDC = \frac{\frac{2.71}{t_s} + 3.29\sqrt{R_b\left(\frac{1}{t_s} + \frac{1}{t_b}\right)}}{E \cdot V \cdot 2.22 \times 10^6 \cdot Y \cdot e^{-\lambda \Delta t}}$$

R_b = the background counting rate, or the counting rate of a blank sample, as appropriate (counts per minute).

t_s = the length of the sample counting period (minutes).

t_b = the length of the background counting period (minutes).

E = the counting efficiency (counts per disintegration)

V = the sample size (units of mass or volume).

2.22×10^6 = the number of disintegrations per minute per μCi.

Y = the fractional radiochemical yield, when applicable.

λ = the radioactive decay constant for the given radionuclide (h^{-1}). Values of λ used in effluent calculations should be based on decay data from a recognized and current source, such as Reference 20.

Δt = for effluent samples, the elapsed time between the midpoint of sample collection and the time of counting (h); for environmental samples, the elapsed time between the end of sample collection and the time of counting (h).

Typical values of E, V, Y, and Δt should be used in the calculation. It should be recognized that the MDC is defined as an *a priori* (before the fact) limit representing the capability of a measurement system, and not as an *a posteriori* (after the fact) limit for a particular measurement.

PRINCIPAL GAMMA EMITTERS

The PRINCIPAL GAMMA EMITTERS for which the MINIMUM DETECTABLE CONCENTRATION (MDC) limit applies include exclusively the following radionuclides:

- For liquid radioactive effluents: Mn-54, Fe-59, Co-58, Co-60, Zn-65, Mo-99, Cs-134, Cs-137, and Ce-141. Ce-144 shall also be measured, but with an MDC of 5×10^{-6} μCi/mL.

- For gaseous radioactive effluents: In noble gas releases, Kr-87, Kr-88, Xe-133, Xe-133m, Xe-135, Xe-138; and in particulate releases, Mn-54, Fe-59, Co-58, Co-60, Zn-65, Mo-99, Cs-134, Cs-137, Ce-141, and Ce-144.

- For environmental media: The gamma emitters specifically listed in Table 4-3.

These lists do not mean that only these nuclides are to be considered. Other gamma peaks that are identifiable, together with those of the above nuclides, shall also be analyzed and reported in the Radioactive Effluent Release Report, the Annual Radiological Environmental Operating Report, or other applicable report(s).

SITE BOUNDARY

For the purpose of effluent controls defined in the ODCM, the SITE BOUNDARY shall be as shown in Figure 4-1.

SOURCE CHECK

A SOURCE CHECK shall be the qualitative assessment of channel response when the channel sensor is exposed to a source of increased radioactivity.

UNRESTRICTED AREA

The UNRESTRICTED AREA shall be any area access to which is neither limited nor controlled by the licensee, or any area within the SITE BOUNDARY used for residential quarters or for industrial, commercial, institutional, and/or recreational purposes.

VENTILATION EXHAUST TREATMENT SYSTEM

The VENTILATION EXHAUST TREATMENT SYSTEM is any system designed and installed to reduce gaseous radioiodine or radioactive material in particulate form in effluents, by passing ventilation or vent exhaust gases through charcoal adsorbers and/or HEPA filters, for the purpose of removing iodines or particulates from the gaseous exhaust stream prior to the release to the environment. (Such a system is not considered to have any effect on any noble gas effluents). Engineered Safety Feature (ESF) atmospheric cleanup systems are not considered to be VENTILATION EXHAUST TREATMENT SYSTEM components.

10.2 TERMS DEFINED IN THE TECHNICAL SPECIFICATIONS

The following terms are defined in the Technical Specifications, Section 1.0. Because they are used throughout the Limits of Operation sections of the ODCM, they are presented here for convenience. In the event of discrepancies between the definitions below and those in the Technical Specifications, the Technical Specification definitions shall take precedence.

CHANNEL CALIBRATION

A CHANNEL CALIBRATION shall be the adjustment, as necessary, of the channel, such that it responds within the required range and accuracy to known values of input. The CHANNEL CALIBRATION shall encompass the entire channel including the required sensor, alarm, interlock, and/or trip functions and may be performed by any series of sequential, overlapping, or total channel steps, so that the entire channel is calibrated.

CHANNEL CHECK

A CHANNEL CHECK shall be the qualitative assessment of channel behavior during operation by observation. This determination shall include, where possible, comparison of the channel indication and/or status with other indications and/or status derived from independent instrument channels measuring the same parameter.

CHANNEL OPERATIONAL TEST (COT)

A CHANNEL OPERATIONAL TEST shall be the injection of a simulated signal into the channel as close to the sensor as practicable to verify operability of required alarm, interlock, and/or trip functions. The CHANNEL OPERATIONAL TEST shall include adjustments, as necessary, of the required alarm, interlock, and/or trip setpoints, so that the setpoints are within the required range and accuracy.

DOSE EQUIVALENT I-131

DOSE EQUIVALENT I-131 shall be that concentration of I-131 (μCi/g) which alone would produce the same thyroid dose as the quantity and isotopic mixture of I-131, I-132, I-133, I-134, and I-135 actually present. The thyroid dose conversion factors used for this calculation shall be those listed in Table E-7 of NRC Regulatory Guide 1.109, Revision 1, 1977.

MODE (or OPERATIONAL MODE)

An OPERATIONAL MODE shall correspond to any one inclusive combination of core reactivity condition, power level, average reactor coolant temperature, and reactor vessel head closure bolt tensioning specified in Section 1.0 of the Technical Specifications with fuel in the reactor vessel.

OPERABLE (or OPERABILITY)

OPERABILITY exists when a system, subsystem, train, component or device is capable of performing its specified function(s), and when all necessary attendant instrumentation, controls, electrical power, cooling or seal water, lubrication or other auxiliary equipment that are required for the system, subsystem, train, component or device to perform its function(s) are also capable of performing their related support function(s).

RATED THERMAL POWER

RATED THERMAL POWER shall be a total reactor core heat transfer rate to the reactor coolant of 3565 MWt.

THERMAL POWER

THERMAL POWER shall be the total reactor core heat transfer rate to the reactor coolant.