Attachment 4

Environmental Radiological Monitoring Procedure
(Procedure RP1.ID11, Revision 5)

TITLE: Environmental Radiological Monitoring Procedure

06/27/00
EFFECTIVE DATE

SPONSORING ORGANIZATION: RADIATION PROTECTION
PROCEDURE CLASSIFICATION: QUALITY RELATED
REVIEW LEVEL: "A"

1. SCOPE

This procedure constitutes the Environmental Radiological Monitoring Procedure (ERMP) and implements the requirements of the Radiological Environmental Monitoring Program (REMP) for Diablo Canyon Power Plant in accordance with Technical Specification 5.6.2 and 5.5.1.

2. DISCUSSION

2 1 This procedure describes the minimum required program, describing sample locations, types of sample locations, methods and frequency of analysis, reporting requirements, performance of Land Use Census and participation in an Interlaboratory Comparison Program.

2.2 This procedure also contains the state of California Department of Health Services (DHS) cross-check program.

2.3 The program described by this procedure provides measurements of radiation and of radioactive materials in those exposure pathways and for those nuclides that lead to the highest potential radiation exposures of Members of the Public resulting from plant operation. This monitoring program implements section IV.B.2, IV.B.3 and IV.C of Appendix I to 10 CFR 50 and supplements the Radioactive Effluent Control Program. Guidance for this monitoring program is provided by the Radiological Assessment Branch Technical Position on Radiological Environmental Monitoring, revision 1, November, 1979.

3. DEFINITIONS

3.1 Broadleaf Vegetation - means the leafy portion of plants such as lettuce, cabbage, spinach, or other similar leafy plants, typically used for human consumption.

3.2 Supplemental Sample - means samples that should be collected when available, but when they are not available, they are not subject to the substitution requirements of Table 1 Note 1. These types of samples are specifically designated as "supplemental" in Table 1.

4. RESPONSIBILITIES

4 1 The Director, Radiation Protection is responsible for ensuring implementation of the Environmental Radiological Monitoring Procedure, including.

4 1.1 Ensuring the performance of the annual Land Use Census and that the results are provided to CEO so that CEO can establish the dose requirements of Appendix 6.1.12.1 of CY2 ID1," Radioactive Effluent Controls Program."

4.1.2 Ensuring that the results of the annual Land Use Census and environmental TLD results are provided to TES for inclusion in the Annual Radiological Environmental Operating Report.

4.1.3 Ensuring that changes to the ERMP are provided to CEO for inclusion in the Annual Radiological Effluent Release Report.

4.1.4 Ensuring that the required sampling and monitoring program is performed.

4.1.5 Approving the Annual Radiological Environmental Operating Report prior to its submittal to the NRC

4.1 6 Ensuring that the environmental TLD program is maintained.

4.2 The Director, Chemical and Environmental, TES is responsible for:

4.2.1 Ensuring analysis is performed for the samples as required by the ERMP.

4.2.2 Ensuring that summaries, interpretations and trends required for the Annual Radiological Environmental Operating Report are performed and that the Report is prepared and reviewed.

4.2.3 Ensuring that participation is maintained in an Interlaboratory Comparison Program sufficient to satisfy step 7.3.1 of this procedure.

4.2.4 Ensuring that ERMP sample results exceeding the criteria of Appendix 6.1.11.1 of CY2.ID1, "Radioactive Effluent Controls Program" are communicated promptly to the Director , CEO and the Director, RP at DCPP

4.2.5 Ensuring that appropriate procedures are established and maintained for sample handling, sample analysis and all associated laboratory equipment.

4.3 The Manager, Nuclear Assessment and Licensing is responsible for ensuring that reports required by the ERMP are submitted to the appropriate recipients in accordance with XI1.ID2, "Regulatory Reporting Requirements and Reporting Process."

4.4 The REMP Engineer is responsible for ensuring that the personnel responsible for the management and for the implementation of the REMP receive training on the changes to the REMP at least annually. Such training should consist of topics related to the changes in the DCPP REMP procedures, industry events, any changes in technology that pertain to REMP sampling techniques or to the analysis of REMP samples and the nature and goals of the quality assurance program Proficiency of personnel who perform activities affecting the quality of the REMP shall be maintained by retraining, reexamining, recertifying, or by periodic performance reviews as appropriate. Initial training will be provided on an as needed basis to new personnel responsible for quality related REMP activities

5. PREREQUISITES

None

6. PRECAUTIONS

None

7. INSTRUCTIONS

Sampling and Monitoring

7.1 Environmental samples shall be collected and analyzed according to Table 1 at the locations shown in Table 5 and Figures 1 and 2. Analytical techniques used will be such that the detection capabilities in Table 2 are routinely achieved. The sampling frequencies specified in Table 1 are allowed an extension of 25 percent.

7.2 Land Use Census

7.2.1 This Census satisfies the requirements of section IV B.3 of Appendix I to 10 CFR 50. Restricting the Census to gardens of greater than 500 square feet provides assurance that significant exposure pathways via broadleaf vegetation will be identified and monitored as necessary. The size of the garden is the minimum to produce the quantity of 26 kg/year of broadleaf assumed in Regulatory Guide 1.109 for consumption by a child.

7.2.2 A Land Use Census will be conducted at least once per year, during the growing season, which will determine the locations in each of the 16 meteorological sectors within a distance of 8 km (5 mi) for:

a. The nearest milk animal, and

b. The nearest residence, and

c. The nearest garden of greater than 50 square meters (500 sq. ft.) producing broadleaf vegetation

NOTE: Broadleaf vegetation sampling may be performed at the Site Boundary in a sector with the highest D/Q in lieu of the garden census portion of the Land Use Census.

7.2.3 The Land Use Census will be conducted using that information which will provide the best results, which typically consists of discussions with landowners/tenants in conjunction with an aerial survey. Local agricultural authorities may also be consulted.

7.2 4 If the Land Use Census identifies a location(s) that yields a calculated dose or dose commitment greater than the values currently being calculated in accordance with Appendix 6.1.12 of CY2.ID1, the new location(s) shall be identified in the next Annual Radioactive Effluent Release Report.

7.2.5 If the Land Use Census identifies a location(s) that yields a calculated dose or dose commitment (via the same exposure pathway) 20 percent greater than at a location from which samples are currently being obtained in accordance with Appendix 6.1.11 of CY2.ID1, add the new location(s) within 30 days to the Radiological Environmental Monitoring Program given in this ERMP. The sampling location(s), excluding the control station location, having the lowest calculated dose or dose commitment(s), via the same exposure pathway, may be deleted from this monitoring program after October 31 of the year in which this Land Use Census was conducted Documentation for a change in the ERMP will be submitted in the next Annual Radioactive Effluent Release Report including a revised figure(s) and table(s) for the ERMP reflecting the new location(s) with information supporting the change in sampling locations.

7.3 Cross-check Programs

7.3.1 Participation will be maintained in an Interlaboratory Comparison Program. This participation will include each of the determinations (sample medium-radionuclide combination) as described in Table 1 to ensure independent checks on the precision and accuracy of the measurements of radioactive materials in the ERMP samples.

7.3.2 Participation will be maintained in a split-sampling program with the State of California Department of Health Services (DHS) as required by DHS. The program will consist of radiological analyses of duplicate samples or replicate analyses of the same sample by both TES and DHS. The results of TES's analyses of the samples will be transmitted to DHS as soon as practicable after the end of the quarter in which the samples were collected. The sample types, analyses performed, and frequencies of collection are given in Table 6.

7.4 Annual Radiological Environmental Operating Report

7.4 1 A report on the Radiological Environmental Monitoring Program will be prepared annually and submitted to the NRC prior to May 1 of the following year.

7.4 2 The Annual Radiological Environmental Operating Report shall include:

a. summaries, interpretations, and an analysis of trends of the results of the Radiological Environmental Monitoring Program activities for the report period

b. a comparison with preoperational studies, operational controls (as appropriate), and previous environmental surveillance reports

c. an assessment of the observed impacts of the plant operation on the environment

d. the results of Land Use Census

e. the results of analyses of all radiological environmental samples and of all environmental radiation measurements taken during the period pursuant to the locations specified in tables and figures in this ERMP as well as summarized and tabulated results of these analyses and measurements in the format of Table 3 or equivalent

f a summary description of the Radiological Environmental Monitoring Program

g. legible maps covering all sampling locations keyed to a table giving distances and directions from the centerline of Unit One Reactor

h. the results of licensee participation in the Interlaboratory Comparison Program and the corrective action taken if the specified program is not being performed as required

i the reason for not conducting the Radiological Environmental Monitoring Program as required, and discussion of all deviations from the sampling schedule of Table 1, including plans for preventing a recurrence

j. a discussion of environmental sample measurements that exceed the reporting levels of Table 4, but are not the result of plant effluents (i.e., demonstrated by comparison with a control station or with preoperational data)

k. a discussion of all analyses in which the LLD required by Table 2 was not achievable

7.5 Nonroutine Reports

7.5.1 Supplementary Report

a. In the event that some results are not available for inclusion with the report, the report shall be submitted noting and explaining the reasons for the missing results. The missing data shall be submitted as soon as possible in a Supplementary Report.

7.5.2 Nonroutine Radiological Environmental Operating Report

a. If a measured radionuclide concentration resulting from plant effluents in an environmental sampling medium, averaged over any calendar quarter sampling period, exceeds the reporting level given in Table 4, or when radionuclides other than those in Table 4 are detected and are the result of plant effluents where the potential annual dose to a Member of the Public from all radionuclides is equal to or greater than the calendar year limits of Appendix I of 10 CFR 50, a Nonroutine Radiological Environmental Operating Report shall be prepared in accordance with CY2.ID1 This report is not required if the measured level of radioactivity was not the result of plant effluents, however, in such an event, the condition shall be reported and described in the Annual Radiological Environmental Operating Report.

7.6 ERMP Changes

7.6.1 Changes to the ERMP shall be documented and the records of reviews performed shall be retained for the duration of the Operating License, as required by FSAR Chapter 17. This documentation shall contain:

a. Sufficient information to support the change together with the appropriate analyses or evaluations justifying the change(s) and

b. A determination that the change will maintain the level of radioactive effluent control required by 10 CFR 20.1301, 40 CFR 190, 10 CFR 50 36a, and Appendix I to 10 CFR 50 and not adversely impact the accuracy or reliability of effluent, dose, or setpoint calculations.

7.6.2 Shall become effective after review and acceptance by the PSRC and the approval of the Plant Manager.

7.6.3 Shall be submitted to the Nuclear Regulatory Commission in the form of a complete, legible copy of the entire ERMP as part of or concurrent with the Annual Radioactive Effluent Release Report for the period of the report in which any change to the ERMP was made. Each change shall be identified by:

a. markings in the margin of the affected pages

b. clearly indicating the area of the page that was changed

c. indicating the date (e.g., month/year) the change was implemented

7.6.4 Notification of Sample Unavailability

a. If milk or vegetation sampling is not being performed as required by Table 1, identify specific locations for obtaining replacement samples and add them within 30 days to the Radiological Environmental Monitoring Program given in the ERMP. The specific locations from which samples were unavailable may then be deleted from the monitoring program. Submit in the next Annual Radioactive Effluent Release Report documentation for a change in the ERMP including a revised figure(s) and table for the ERMP reflecting the new location(s) with supporting information identifying the cause of the unavailability of samples and justifying the selection of the new location(s) for obtaining samples.

NOTE: The currently approved ERMP allows for substitution of milk and broadleaf vegetation sampling with additional air sampling in two sectors.

8. RECORDS

8.1 Performance of the Land Use Census shall be documented, including as a minimum the names of persons contacted and dates of contact This documentation does not need to appear in the required reports, but should be entered into the Records Management System.

8.2 Changes to the ERMP shall be retained in the Records Management System for the duration of the plant Operating License.

8.3 REMP training shall be documented and recorded in PIMS. Training records shall also be placed in the Records Management System (RMS) for the duration of the plant Operating License.

9. APPENDICES

None

10. ATTACHMENTS

None

11. REFERENCES

11.1 CY2, "Radiological Monitoring and Controls Program."

11.2 CY2.ID1, "Radioactive Effluent Control Program."

11.3 10 CFR 50 Appendix I

11.4 DCPP, Units 1 & 2, Plant Manual, Licenses, Amendments & Tech Specs, Volume 4A.

12. SPONSOR

D.P. Royer

Table 1
Radiological Environmental Monitoring Program

Exposure Pathway and/or Sample	Number of Representative Samples and Sample Locations[1]	Sampling and Collection Frequency	Type of Analysis
1. Direct Radiation[2]	Thirty-one routine monitoring stations[3] containing thermoluminescent dosimeters (TLDs) such that at least two (2) phosphors are present at each station, placed as follows: An inner ring of stations, one in each terrestrial meteorological sector in the general area of the SITE BOUNDARY; An outer ring of stations, one in each terrestrial meteorological sector in the 2.5 to 12 km range from the site; and The balance of the stations to be placed in special interest areas such as population centers, nearby residences, schools, and in one or two areas to serve as control stations.	Quarterly	Gamma dose.

Table 1 (Continued)
Radiological Environmental Monitoring Program

Exposure Pathway and/or Sample	Number of Representative Samples and Sample Locations[1]	Sampling and Collection Frequency	Type of Analysis
2. Airborne			
(Radioiodine and particulates)	Samples from five locations: Three samples from close to the three SITE BOUNDARY locations, in different sectors, of the highest calculated annual average ground level D/Q. (Historically these have been: MT1, OS2 and 8S1) One sample (7D1) from the vicinity of a community having the highest calculated annual average ground level D/Q; One sample (5F1) from a control location.	Continuous sampler operation with sample collection weekly, or more frequently if required by dust loading.	Radioiodine Cartridge· I-131 analysis. Particulate Sample. Gross beta radio-activity analysis following filter change[4] and gamma isotopic analysis[5] of composite (by location) consisting of approximately 12 filters. Perform gamma isotopic analysis on composite (by location) quarterly.
3. Waterborne			
a. Surface	One sample from the plant Outfall (OUT), Diablo Cove (DCM) and an area not influenced by plant discharge (7C2).	Monthly grab sample.	Gamma isotopic analysis[5]. Tritium analysis (quarterly).
b. Drinking	One sample of plant drinking water (DW1) and one from Diablo Creek (5S2).	Monthly grab sample.	I-131, gamma isotopic analysis[5]. Tritium analysis (quarterly).
c. Sediment	One sample (from DCM and 7C2).	Annual sample.	Gamma isotopic.
d. Marine Flora[6]	One sample of kelp (from DCM, PON, POS and 7C2).	Quarterly, when available.	Gamma isotopic.
	One sample of intertidal algae (from DCM and 7C2).	Quarterly, when available.	Gamma isotopic

Table 1 (Continued)
Radiological Environmental Monitoring Program

Exposure Pathway and/or Sample	Number of Representative Samples and Sample Locations[1]	Sampling and Collection Frequency	Type of Analysis
4. Ingestion			
a. Milk	Samples from milking animals in three locations within 5 km distance having the highest dose potential. If there are none, then one sample from milking animals in each of three areas between 5 to 8 km distance where doses are calculated to be greater than 1 mrem per year. One sample from milking animals at a control location 15 to 30 km distant and in the least prevalent wind direction.	Semimonthly when animals are on pasture; monthly at other times.	Gamma isotopic[5] and I-131 analysis.
	Note: The sample (5F2)[6] should be taken monthly even if there are no indicator samples available.		
b. Fish and Invertebrates	One sample of rock fish (Sebastes), one sample of perch (Family Embiotocidae), and one sample of mussel (Mytilus), (from DCM, PON[6], POS[6] and 7C2).	Sample quarterly.	Gamma isotopic analysis[5] on edible portions of each sample.
	One sample of market fish[6] (from 7D3 or 2F1).	Sample quarterly.	
	One sample of red abalone[6] (from DCM and 7C2).	Sample semiannually, when available.	
c. Broadleaf Vegetation[7]	Three samples of broadleaf vegetation grown nearest off-site locations of highest calculated annual average ground level D/Q IF milk sampling is not performed.	Monthly, when available.	Gamma isotopic analysis[5] (that includes I-131) on edible portion.
	One sample of each of the similar broadleaf vegetation grown 15 to 30 km distant in the least prevalent wind direction IF milk sampling is not performed.	Monthly, when available.	

Table 1 (Continued)
Radiological Environmental Monitoring Program

Exposure Pathway and/or Sample	Number of Representative Samples and Sample Locations[1]	Sampling and Collection Frequency	Type of Analysis
d. Vegetative Crops[6]	One sample of broadleaf vegetation or vegetables or fruit (from 5F2, 6C1, 7G1 and 7C1).	Monthly, when available. (6C1 is sampled quarterly)	Gamma isotopic analysis[5] of edible portion

Table Notations

1. Deviations are permitted from the required sampling schedule if specimens are unobtainable due to circumstances such as hazardous conditions, seasonal unavailability, malfunction of automatic sampling equipment and other legitimate reasons. If specimens are unobtainable due to sampling equipment malfunction, effort shall be made to complete corrective action prior to the end of the next sampling period. All deviations from the sampling schedule shall be documented in the Annual Radiological Environmental Operating Report. It is recognized that, at times, it may not be possible or practicable to continue to obtain samples of the media of choice at the most desired location or time. In these instances, suitable specific alternative media and locations may be chosen for the particular pathway in question and appropriate substitutions made within 30 days in the Radiological Environmental Monitoring Program, and submitted in the next Annual Radioactive Effluent Release Report, including a revised figure(s) and table for the ERMP reflecting the new location(s) with supporting information identifying the cause of the unavailability of samples for that pathway and justifying the section of the new location(s) for obtaining samples.
2. For the purposes of this table, a thermoluminescent dosimeter (TLD) is considered to be one phosphor. There are normally three calcium sulfate phosphors in an environmental TLD BADGE. Film badges shall not be used as dosimeters for measuring direct radiation.
3. Inner ring stations: 0S1, WN1, 0S2, 1S1, 2S1, 3S1, 4S1, 5S1, 5S3, 6S1, 7S1, 8S1, 8S2, 9S1, and MT1.

   Outer ring stations: 1A1, 0B1, 1C1, 2D1, 3D1, 4C1, 5C1, 6D1, and 7C1.

   Special interest stations. 4D1, 7F1, 7D1, 7D2, 7G2, and 5F3.

   Control station: 5F1.
4. Airborne particulate sample filters shall be analyzed for gross beta radioactivity 24 hours or more after sampling to allow for radon and thoron daughter decay. If gross beta activity in air particulate samples is greater than 10 times the yearly mean of control samples, gamma isotopic analysis shall be performed on the individual samples.
5. Gamma isotopic analysis means the identification and quantification of gamma-emitting radionuclides that may be attributable to the effluents from the facility.
6. Supplemental sample.
7. If food products are unavailable, additional air sampling as specified in Table 1, Part 2 will be done in the SE (Station 8S2) and NNW (station 1S1) sectors.

Table 2

Detection Capabilities for Environmental Sample Analysis [1] [2]
Lower Limits of Detection (LLD) [3]

Analysis	Water (pCi/L)	Airborne Particulate or Gases (pCi/m^3)	Fish (pCi/kg, wet)	Milk (pCi/L)	Food Products (pCi/kg, wet)	Sediment (pCi/kg, dry)
Gross beta	4	0.01				
H-3	2000*					
Mn-54	15		130			
Fe-59	30		260			
Co-58, 60	15		130			
Zn-65	30		260			
Zr-Nb-95	15					
I-131	1**	0.07		1	60	
Cs-134	15	0.05	130	15	60	150
Cs-137	18	0.06	150	18	80	180
Ba-La-140	15			15		

Table Notations

(1) This list does not mean that only these nuclides are to be considered. Other peaks that are identifiable, together with those of the above nuclides, shall also be analyzed and reported in the Annual Radiological Environmental Operating Report.

(2) Required detection capabilities for thermoluminescent dosimeters used for environmental measurements shall be in accordance with the recommendations of Regulatory Guide 4.13, Revision 1, July 1977.

(3) The LLD is defined, for purposes of these specifications, as the smallest concentration of radioactive material in a sample that will yield a net count, above system background, that will be detected with 95 percent probability with only 5 percent probability of falsely concluding that a blank observation represents a "real" signal.

*For surface water samples, a value of 3000 pCi/L may be used.

** If no drinking water pathway exists, a value of 15 pCi/L may be used

Table 2 (Continued)

Table Notations

For a particular measurement system, which may include radiochemical separation:

$$LLD = \frac{4.66 s_b}{E \times V \times 2.22 \times Y \times \exp(-\lambda t)}$$

Where·

LLD = the "a priori" the lower limit of detection as defined above (as pCi per unit mass or volume)

S_b = the standard deviation of the background counting rate or of the counting rate of a blank sample as appropriate (as counts per minute)

E = the counting efficiency (as counts per transformation)

V = the sample size (in units of mass or volume)

2.22 = the number of transformations per minute per picocurie

Y = the fractional radiochemical yield (when applicable)

λ = the radioactive decay constant for the particular radionuclide

t = the elapsed time between sample collection (or end of the sample collection period) and time of counting

The value of S_b used in the calculation of the LLD for a detection system will be based on the actual observed variance of the background counting rate or of the counting rate of the blank samples (as appropriate) rather than on an unverified theoretically predicted variance. In calculating the LLD for a radionuclide determined by gamma-ray spectrometry, the background will include the typical contributions of other radionuclides normally present in the samples (e.g., potassium-40 in milk samples).

Analyses will be performed in such a manner that the stated LLDs will be achieved under routine conditions. Occasionally background fluctuations, unavoidably small sample sizes, the presence of interfering nuclides, or other uncontrollable circumstances may render these LLDs unachievable. In such cases, the contributing factors will be identified and described in the Annual Environmental Radiological Operating Report.

Typical values of E, V, Y and t should be used in the calculation. It should be recognized that the LLD is defined as a priori (before the fact) limit representing the capability of a measurement system and not as a posteriori (after the fact) limit for a particular measurement.

Table 3

Environmental Radiological Monitoring Program Summary

Name of Facility _____ Docket No _____

Location of Facility (County, State) _____ Reporting Period _____

Medium or Pathway Sampled (Unit of Measurement)	Type and Total Number of Analyses Performed	Lower Limit of Detection(a) (LLD)	Location with Highest Annual Mean: Name, Distance and Direction	Location with Highest Annual Mean: Mean (1)(b) Range (b)	All Indicator Locations Mean (1)(b) Range (b)	Control Locations Mean(1)(b) Range(b)	Number of Reportable Occurrences

(a) Unless indicated the LLDs specified in Table 2 were met.

(b) Mean and the range based upon detectable measurements only. Fraction of detectable measurements at specified locations is indicated in parentheses (1); e.g., (10/12) means that 10 out of 12 samples contained detectable activity.

Table 4

Reporting Levels for Radioactivity Concentrations in Environmental Samples

Analysis	Water (pCi/L)	Airborne Particulate or Gases (pCi/m^3)	Fish (pCi/kg, wet)	Milk (pCi/L)	Food Products (pCi/kg, wet)
H-3	20,000*				
Mn-54	1,000		30,000		
Fe-59	400		10,000		
Co-58	1,000		30,000		
Co-60	300		10,000		
Zn-65	300		20,000		
Zr-Nb-95	400				
I-131	2**	0.9		3	100
Cs-134	30	10	1,000	60	1,000
Cs-137	50	20	2,000	70	2,000
Ba-La-140	200			300	

* For drinking water samples. This is the 40CFR141 value If no drinking water pathway exists, a value of 30,000 pCi/L may be used.

** If no drinking water pathway exists, a value of 20 pCi/L may be used.

Table 5

Distances and Directions to Environmental Monitoring Stations
(Stations are shown on Figures 1 and 2)

Station Code*	Station Name	Radial Direction (True Heading) (Degrees)	Radial Distance from Plant km (Miles)	
0S1	Exclusion Fence-Northwest Corner	320	.16	(0 1)
0S2	North Gate	320	.8	(0.5)
1S1	Wastewater Pond	330	.64	(0.4)
2S1	Back Road-300 m North of Plant	0	.32	(0.2)
3S1	Road NW of 230 kv Switchyard	23	.64	(0.4)
4S1	Back Road Between Switchyards	43	.8	(0.5)
5S1	400 kv Switchyard	58	.64	(0.4)
5S2	Diablo Creek Weir	65	.96	(0.6)
5S3	Microwave Tower Road	70	1.02	(0.7)
6S1	Microwave Tower	94	.8	(0.5)
7S1	Overlook Road	112	48	(0.3)
8S1	Target Range	125	8	(0 5)
8S2	Southwest Site Boundary	128	1.76	(1.1)
9S1	South Cove	167	.64	(0.4)
MT1	Meteorological Tower	185	.32	(0.2)
DCM	Diablo Cove Marine	270	.32	(0.2)
WN1	Northwest Guard Shack	290	.32	(0.2)
1A1	Crowbar Canyon	327	2.56	(1.6)
0B1	Point Buchon	325	5.76	(3.6)
1C1	Montana de Oro Campground	336	7.52	(4.7)
4C1	Clark Valley Gravel Pit	45	9.28	(5 8)
6C1	Household Garden	98	7.24	(4.5)
5C1	Junction Prefumo/See Canyon Roads	64	7.52	(4.7)
7C1	Pecho Creek Ruins (Mello Farm)	120	6 56	(4.1)
7C2	Rattlesnake Canyon	124	7.52	(4.7)
2D1	Sunnyside School	10	11.04	(6.9)
3D1	Clark Valley	24	9.92	(6.2)
4D1	Los Osos School	36	12.16	(7.6)
6D1	Junction See/Davis Canyon Roads	89	12.0	(7.5)
7D1	Avila Gate	118	10.56	(6.6)
7D2	Avila Beach	110	12.16	(7.6)
7D3	Avila Pier	120	11.0	(6.9)
2F1	Morro Bay (Commercial Landing)	0	17.44	(10.9)
5F1	SLO Zone I Substation	68	17.92	(11.2)
5F2	Cal Poly Farm	60	20.16	(12.6)
5F3	SLO County Health Department	70	20.32	(12.7)
7F1	Shell Beach	110	17.28	(10.8)

Table 5 (Continued)

Distances and Directions to Environmental Monitoring Stations
(Stations are shown on Figures 1 and 2)

Station Code*	Station Name	Radial Direction (True Heading) (Degrees)	Radial Distance from Plant km (Miles)	
7G1	Arroyo Grande (Kawaoka Farm)	115	26.88	(16.8)
7G2	Oceano Substation	118	27 68	(17.3)
OUT	Plant Outfall	270	32	(0.2)
DW1	Drinking Water from Plant Potable Water System	Bio Lab	---	---
PON	Pacific Ocean North of Diablo Cove	305	2.4	(1.5)
POS	Pacific Ocean South of Diablo Cove	145	1.28	(0.8)

*Station Code (XYZ):

X - First number (0-9) represents the radial sector in which the station is located·

0	- Northwest	5	- East-northeast
1	- North-northwest	6	- East
2	- North	7	- East-southeast
3	- North-northeast	8	- Southeast
4	- Northeast	9	- South-southeast

Y - Letter (S, A-H) represents the distance from the plant:

S - On-site
A - 0-2 miles from plant (but off-site)
B - 2-4 miles from plant
C - 4-6 miles from plant
D - 6-8 miles from plant
E - 8-10 miles from plant
F - 10-15 miles from plant
G - 15-20 miles from plant
H - Greater than 20 miles from plant

Z - Second number represents the station number within the zone.

*Station Codes (DCM, MT1, WN1, PON, POS, OUT, DW1):

The following stations do not follow the coding system: Diablo Cove Marine (DCM), Meteorological Tower (MT1), Northwest guard shack (WN1), Pacific Ocean North (PON), Pacific Ocean South (POS), Plant outfall (OUT), and Drinking water (DW1).

Table 6

Summary of Cross-Check Program with State of California

Sample Type	Station No.	Frequency*	Radioanalyses
Milk (supplemental)	5F2	Monthly	Gamma Isotopic (incl. I-131 and K-40)
Drinking Water	DW1	Monthly	Gamma Isotopic (incl. I-131), H-3
Outfall Water	OUT	Monthly	Gamma Isotopic, H-3
Diablo Creek	5S2	Monthly	Gamma Isotopic, H-3
Vegetative Crops (supplemental)	7G1	Quarterly	Gamma Isotopic
Fish or Invertebrate	DCM	Quarterly	Gamma Isotopic
Air Particulates and Radioiodine	5F1, 7D1	Weekly Quarterly	Gross Beta, I-131 Gamma Isotopic (composite airborne particulate samples)
Sediment	DCM	Annually	Gamma Isotopic
Direct Radiation (TLD)	MT1, 4D1, 5F3, 7D1, 7C1	Quarterly	Gamma Exposure (mR)
Kelp (supplemental)	DCM	Quarterly	Gamma Isotopic

*When available

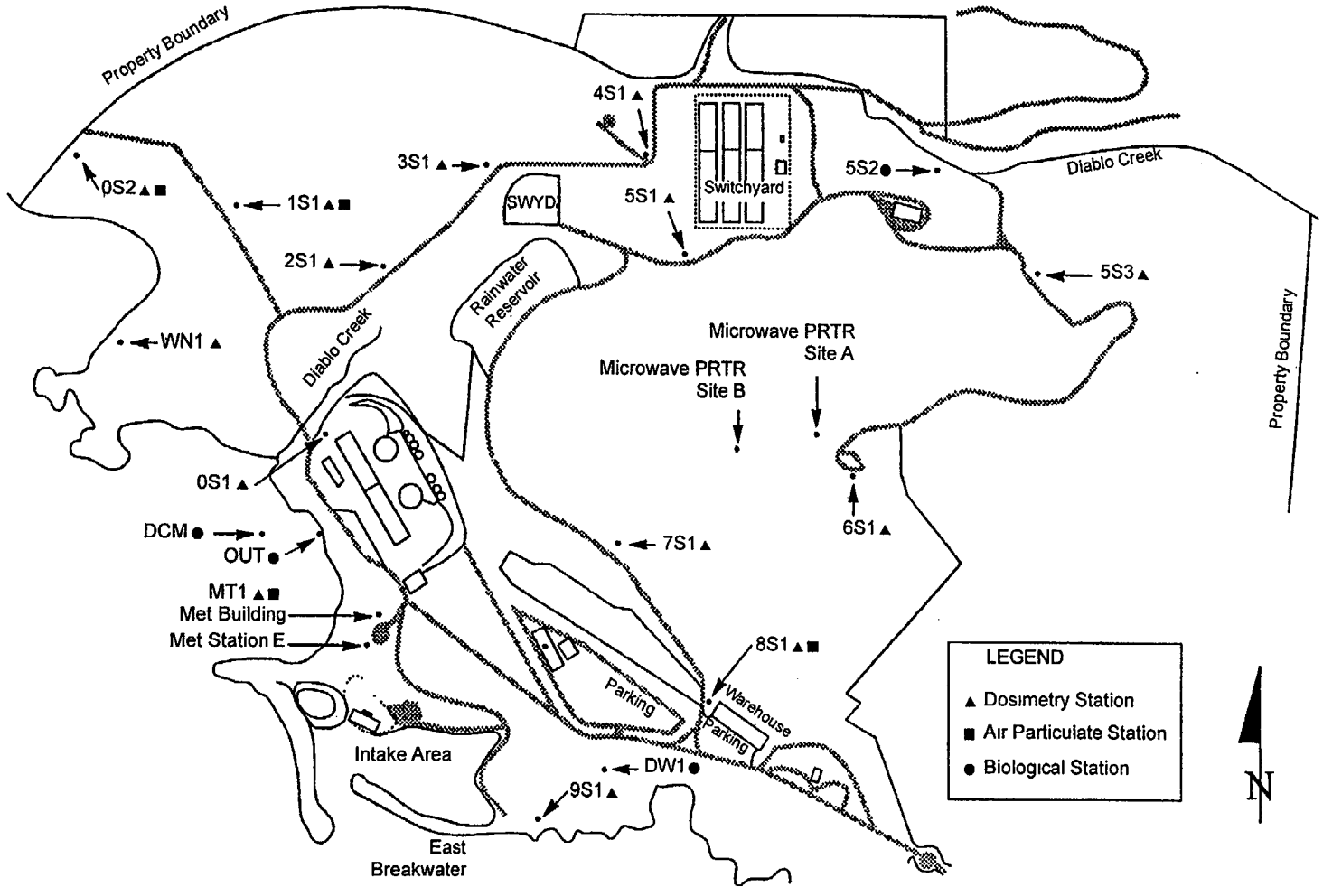

Figure 1 - DCPP Onsite ERMP Stations

01335601

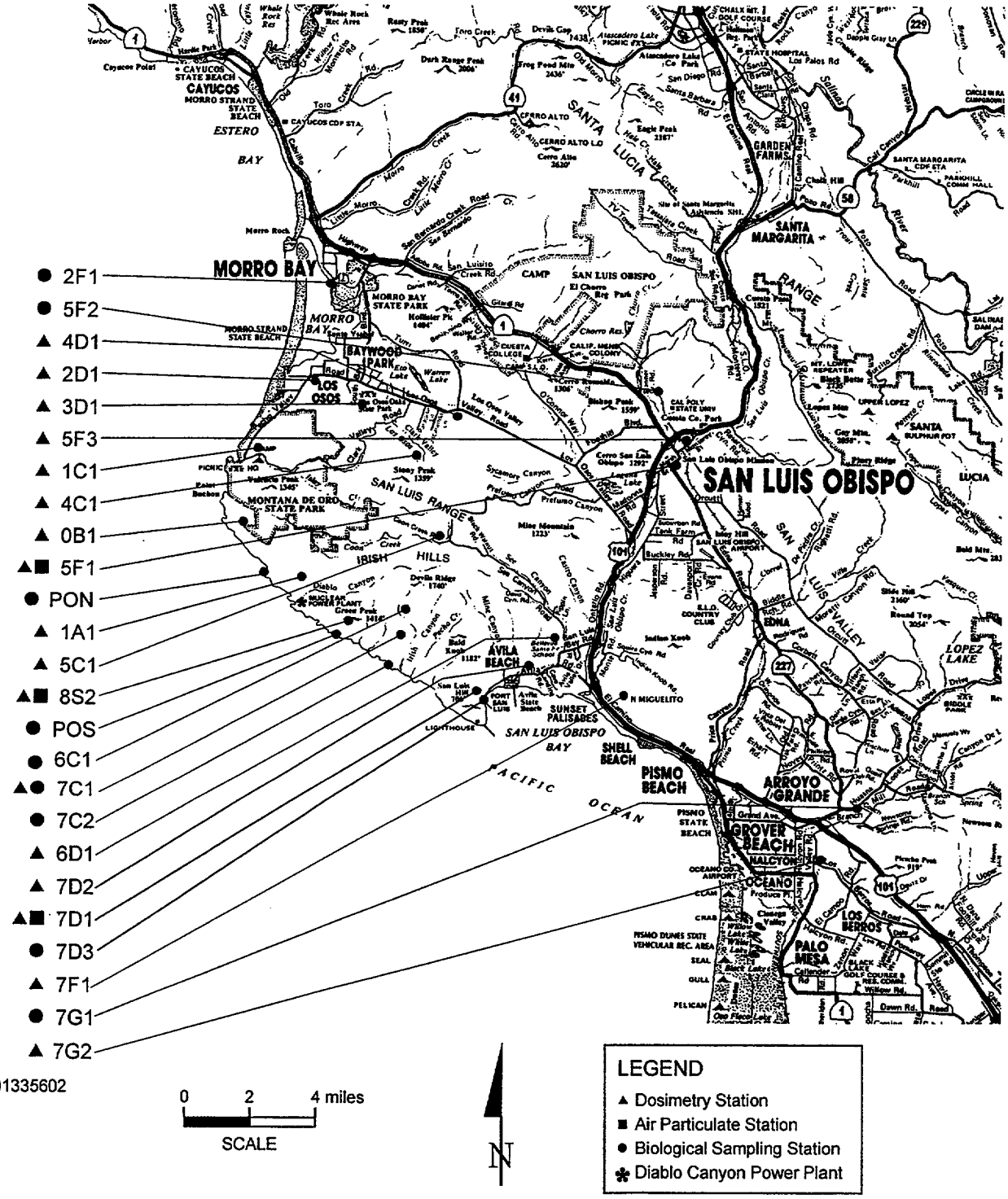

Figure 2 - DCPP Offsite ERMP Stations

Attachment 5

Off-Site Dose Calculations
(Procedure CAP A-8, Revision 24)

TITLE: Off-Site Dose Calculations

12/12/00
EFFECTIVE DATE

PROCEDURE CLASSIFICATION: QUALITY RELATED

TABLE OF CONTENTS

SECTION PAGE

SCOPE ... 2
DISCUSSION ... 3
RESPONSIBILITIES ... 3
PREREQUISITES ... 3
PRECAUTIONS ... 3
INSTRUCTIONS ... 4
Liquid Effluents ... 4
Liquid Effluents - Dose Calculation ... 4
10 CFR 20, Appendix B, Table 2, Column 2, Effluent (liquid) Concentration Limit (ECL) Calculation ... 6
Liquid Effluent Radiation Monitor Set Point Methodology ... 7
Dose Projection (for Liquid Effluents) ... 13
Liquid Limiting Flow Rate Methodology - ECL Based ... 15
Liquid Limiting Flow Rates - LLD Based ... 16
Gaseous Effluents ... 18
Plant Vent Noble Gas Monitor - RE-14 HASP ... 21
Containment Purge - RE-44 HASP ... 28
Dose To Critical Receptor Due To Radioiodines, Tritium and Particulates Released in Gaseous Effluents ... 34
40 CFR 190 Dose Calculations ... 42
ACCEPTANCE CRITERIA ... 47
REFERENCES ... 47
RECORDS ... 47
APPENDICES ... 48
ATTACHMENTS ... 48
SPONSOR ... 48

Table 6.1 - Typical Liquid Effluent Discharge Pathway Allocation Factors ... 8
Table 6.2 - Typical Gaseous Effluent Discharge Pathway Allocation Factors ... 20
Table 6.3 - Expected On-Site Distance and Visitation Times for Members of the Public ... 46

1 SCOPE

This procedure describes the methodology for the following.

Effluent Type	RECP or Tech Spec	RECP or Tech Spec Surveillance Requirement	Implements
Liquids	6 1.1.1 (RECP) 6.1.3 1 (RECP)	Determination of alarm/trip setpoints for RE-18, RE-23, and RE-3	10 CFR 20 App. B Table 2, Col. 2
Gases	6 1.2 1 (RECP) 6 1.6 1 (RECP)	Determination of alarm/trip setpoints for RE-22, RE-14, and RE-14R	NUREG 0133
Liquids	6 1 3 2 (RECP) 6 1 3 3 (RECP)	Prerelease analyses of effluents Postrelease analysis of effluents	10 CFR 20 App. B Table 2, Col. 2
Liquids	6 1 4.2 (RECP)	Dose calculations	10 CFR 50 App. I
Liquids	6 1 5 2 (RECP)	Dose projections	10 CFR 50 App. I
Gases	6.1 6.2	Dose Rate calculations, Noble Gases, Total Body and Skin	NUREG 0133
Gases	6 1 6.3	Dose Rate calculations, Iodines, Particulates and Radionuclides other than Noble Gases, per organ, per age group	NUREG 0133
Gases	6.1 7 2 (RECP)	Noble Gas Air Dose Calculations	10 CFR 50 App. I
Gases	6 1.8 2 (RECP)	Iodines, Particulates, and Radionuclides other than Noble Gases Organ Dose Calculations per age group	10 CFR 50 App. I
Gases	6.1.9.2 (RECP)	Noble Gases, Iodines, Particulates, and Radionuclides other than Noble Gases, Dose Projection	10 CFR 50 App. I
Liquids and Gases	6.1.10 2 (RECP) 4.4 2.b.1 (RECP)	Cumulative Dose from: Liquids, Noble Gases, Iodines, Particulates, and Radionuclides other than Noble Gases per age group, per organ	40 CFR 190
Direct Radiation	6 1.10.3 (RECP)	Direct Radiation Dose Rate and Dose Calculations to unrestricted areas due to plant and high radwaste storage sky-shine	40 CFR 190

The calculational methodology for doses are based on models and data that make it unlikely to substantially underestimate the actual exposure of an individual through any of the appropriate pathways Tables containing the values for the various parameters used in these expressions are also included.

2 DISCUSSION

This procedure is used in support of the Radiological Monitoring and Controls Program (RMCP), and Radioactive Effluent Controls Program (RECP), and the portion that deals with routine radioactive liquid and gaseous releases to the unrestricted area. Limits are based on the dose commitment to a member of the general public related to the release of radionuclides through either direct or indirect exposure (e.g., submersion in a cloud of radioactive Noble Gases, radionuclides deposited on the ground, direct radiation from radionuclides stored on-site, inhalation of radionuclides or ingestion of radionuclides via a food pathway such as milk, meat, vegetable or fish, etc.).

Further, the conduct of the Environmental Radiological Monitoring Procedure (ERMP) is found in RP1 ID11.

3. RESPONSIBILITIES

3.1 The Director, Chemistry is the overseeing authority of responsibility for ensuring that the off-site dose calculational procedure (ODCP) meets all RECP and Tech Spec requirements with regards to calculated doses delivered by the plant to the unrestricted area surrounding the site.

3 2 The Senior Radiochemistry Engineer assumes the overall responsibility for ensuring that this procedure's program is followed and implemented where appropriate, especially in regards to RECP or Tech Spec requirements.

3 3 The Radiochemistry Effluents Engineer has the responsibility of correct and timely implementation of all the procedure's calculational methodology, where appropriate, for each radioactive effluent released Furthermore this engineer is responsible for: reviewing the results, cross (spot) checking the calculations; and maintaining an updated archive of post release calculated doses for annual report purposes

3.4 The Senior Engineer Tech Maintenance Computer Group assures that any supporting computer software is maintained current and compatible with the procedure's calculational methodology and that the computer hardware is maintained operable at all times.

3.5 The Radiochemistry staff engineer provides an oversight of the effluents program's ODCP to: confirm compliance with RECP or Tech Specs; provide technical support; recommend or design improvements to the dose calculational methodology and the effluent program control; and investigate long-term planning toward effluent related activities and their associated dose calculations.

3.6 Responsibilities as described in CY1, " Chemistry and Radiochemistry," and CY1.DC1, "Analytical Data Processing Responsibilities," apply.

4. PREREQUISITES

Not Applicable

5 PRECAUTIONS

Not Applicable

6. INSTRUCTIONS

6.1 Liquid Effluents

6.1.1 Liquid Effluents - Dose Calculation

The dose contributions to the total body and each individual organ (bone, liver, thyroid, kidney, lung and GI-LLI) of the maximum exposed individual (adult) due to consumption of saltwater fish and saltwater invertebrate is calculated for all radionuclides identified in liquid effluents released to unrestricted areas using the following expression:

$$D_o = F_\ell \Delta t \sum_i A_{io} C_i e^{-\lambda_i t_m} \quad (1)$$

Where:

D_o = The dose commitment to organ, o, in mrem.

F_ℓ = Near field average dilution factor during the period of the release It is defined as·

$$F_\ell = \frac{\text{Waste Flow}}{\text{Dilution Flow} \times Z} \quad (2)$$

Where:

Z = Z is the site specific factor for the mixing effect of the discharge structure. Specifically, it is the credit taken for dilution which occurs between the discharge structure and the body of water which contaminates fish or invertebrates in the liquid ingestion pathway. For DCPP Z = 5.

Δt = The time period for the release in hours.

A_{io} = The site specific ingestion dose commitment factor to organ, o, due to radionuclide, i, in mrem/hr per μCi/ml as defined by Equation 3.

C_i = Concentration of radionuclide, i, in the undiluted liquid effluent, in μCi/ml.

λ_i = Decay constant of radionuclide, i.

t_m = Time interval between end of sampling and midpoint of release

The site specific ingestion dose commitment factor, A_{io}, is defined as:

$$A_{io} = k_o(U_F BF_i + U_I BI_i)DF_i \quad (3)$$

Where:

k_o = Units conversion factor of 1 14×10^5 in units of $\rho Ci/\mu Ci \times ml/l \times yr/hr$

U_F = Saltwater fish consumption rate in kilograms of fish per year. DCPP value for this parameter is 21 kg/yr and is taken from NUREG 0133, Section 4.3.1.

BF_i = Saltwater bioaccumulation factor for nuclide, i, in fish flesh in units of ρCi/Kg per ρCi/l. Values for BF_i are taken from Table A-1 of Reg. Guide 1.109.

U_I = Saltwater invertebrate consumption rate in kilograms per years. DCPP value for this parameter is 5 kg/yr and is taken from NUREG 0133, Section 4.3.1.

BI_i = Saltwater bioaccumulation factor for nuclide, i, in invertebrate flesh in units of ρCi/Kg per ρCi/l. Values for BI_i are taken from Table A-1 of Reg. Guide 1.109

DF_i = Adult ingestion dose conversion factor for nuclide, i, in mrem per pCi ingested, from Table E-11 of Regulatory Guide 1.109, with the following exceptions: H-3, Br-82, Sb-124 and Sb-125 ingestion dose conversion factors are taken from NUREG/CR-4013. As-76, Sn-113, Sn-117m and Sb-122 ingestion dose conversion factors were calculated by ORNL using ICRP-2 methodology.

The site specific values for A_{io} are listed in Table 10.1.

Units 1 and 2 share a common liquid radwaste (LRW) treatment system. The effluent doses due to releases discharged via the common LRW are apportioned between the units with 50% credited to Unit 1 and 50% credited to Unit 2.

6.1.2 10 CFR 20, Appendix B, Table 2, Column 2, Effluent (liquid) Concentration Limit (ECL) Calculation

a The ECL for the identified mixture of radionuclides in the "j^{th}" batch of liquids is calculated as follows:

$$ECL_j = \frac{\sum_{i=1}^{n} C_{ij}}{\sum_{i=1}^{n} \frac{C_{ij}}{ECL_{ij}}} \qquad (4)$$

Where.

ECL_j = The unrestricted area total undiluted ECL for the "j^{th}" particular mixture of identified radionuclides, in μCi/ml

C_{ij} = The concentration of radionuclide "i," in μCi/ml for the "j^{th}" mixture

ECL_{ij} = The ECL in unrestricted area water for radionuclide "i," in general, in μCi/ml (from 10 CFR 20, Appendix B, Table 2, Column 2).

b. The overall ECL for simultaneous discharges is given by Equation 5.

$$ECL_{overall} = \frac{\sum_{j=1}^{n} \Phi_j C_j}{\sum_{j=1}^{n} \frac{\Phi_j C_j}{ECL_j}} \quad (5)$$

Where:

$ECL_{overall}$ = The unrestricted area ECL for the current radionuclide mixture for concurrent "j" discharges (in μCi/ml).

C_j = The total activity concentration for the "j^{th}" individual stream in μCi/ml

ECL_j = The total ECL for the "j^{th}" individual mixture (or stream) determined as defined in Equation 4, in μCi/ml

Φ_j = The ratio of an individual discharge "j^{th}" pathway flowrate to the sum total of all individual undiluted pathway flowrates as defined by:

$$\Phi_j = \frac{f_j}{\sum_j f_j} \quad (6)$$

Where:

f_j = Undiluted effluent flowrate for pathway, "j".

6 1.3 Liquid Effluent Radiation Monitor Set Point Methodology

a. Introduction

The DCPP radiological effluent controls program requires that the liquid effluent monitors be operable with their alarm/trip set points set to ensure that the effluent concentration limits of 10 CFR 20 are not exceeded.

The alarm/trip set point for the liquid effluent radiation monitors is derived from the concentration limit set forth in Appendix B, Table 2, Column 2 of 10 CFR 20 1001-2404.

The alarm/trip set points are applied at the unrestricted area boundary The set points take into account appropriate factors for dilution, dispersion, or decay of radioactive materials that may occur between the point of discharge and the unrestricted area boundary.

b. Allocation and Safety Factors

The limits of RECP 6.1 3 1 are site limits which require that the set point methodology must ensure simultaneous releases do not exceed the liquid effluent concentration limits of 10 CFR 20 in the unrestricted area. The DCPP High Alarm Set Point (HASP) methodology makes use of an Allocation Factor (AF) to limit the effluent concentrations from simultaneous liquid discharges The Allocation Factors can be adjusted based upon operational requirements with the restriction that the sum of the Allocation Factors must be less than or equal to 1.

Typical Allocation Factors are shown Table 6. 1

Table 6. 1

Typical Liquid Effluent Discharge Pathway Allocation Factors

Discharge Pathway	Rad Monitor	Allocation Factor (AF)
Oily Water Separator	RE-3	0.01
Liquid Radwaste System	RE-18	0.90
Steam Generator Blow Down (Unit 1)	RE-23 (U1)	0.04
Steam Generator Blow Down (Unit 2)	RE-23 (U2)	0 04
Miscellaneous	none	0.01

An additional level of conservatism in the HASP methodology is implemented by the use of a Safety Factor (SF) The Safety Factor is defined as 0.9 and provides for a High Alarm Set Point at 90% of the 10 CFR 20 concentration limits.

c. Tritium Correction Factor

As result of an aggressive liquid radwaste treatment program, the liquid effluents at DCPP typically contain very low levels of gamma emitters. In order to reduce the over all volume of liquid waste discharged, DCPP also recycles waste water This recycling results in higher tritium concentration in liquid effluents when compared with the low gamma emitter concentrations. As a result, standard HASP methodology results in very low set points In some cases the calculated set points are barely above the monitor background

The liquid HASP methodology used by DCPP uses a Tritium Correction Factor (TCF) which assumes a constant, but conservative tritium concentration in the liquid effluent This results in an operationally reasonable set point while ensuring that the liquid effluent concentrations released to the unrestricted areas do not exceed the limits of 10 CFR 20.

The Tritium Correction Factor is defined as shown in Equation 7.

$$TCF = \left[1 - \left(\frac{C_{H3}/ECL_{H3}}{F/f}\right)\right] \quad (7)$$

Where:

ECL_{H3}	=	effluent concentration limit of tritium
C_{H3}	=	concentration of tritium in the release mix, pre-dilution (μCi/ml)
F	=	conservative dilution flow rate (gpm)
f	=	conservative undiluted effluent flow rate (gpm)

The concentration of tritium, C_{H3}, is conservatively estimated.

d Liquid Effluent Radiation Monitor Set Point Calculations

The High Alarm Set Point (HASP) are calculated to ensure that the liquid effluent concentration limits of 10 CFR 20 are not exceeded. The set points represent the maximum operational set point The actual set point used by operations will be equal to or less than the actual value as determined by the HASP methodology described in this section.

1. Set Point Methodology for RE-3 HASP Oily Water Separator

Under normal conditions, the Oily Water Separator stream does not contain any radioactive material. Only in the event that there is primary to secondary leakage does this become a potential liquid effluent discharge point. In order to insure that no unplanned or unmonitored releases take place by way of the Oily Water Separator, RE-3 serves to monitor the discharge even when no activity has been identified in the effluent. When no significant primary to secondary leakage is taking place or when no activity has been identified in the Oily Water Separator, the High Alarm Set Point for RE-3 is calculated as shown in Equation 8.

$$HASP_{RE-3} = 3 \times BKGD_{RE-3} \quad (8)$$

In the event that primary to secondary leakage results in activity being detected in the Oily Water Separator, Equation 9 will be used to calculate a High Alarm Set Point value. The greater HASP value as determined by Equation 8 or Equation 9 will be used.

$$HASP_{RE-3} = BKGD_{RE-3} + (AF)(SF) \times \sum_{\gamma} k_{\gamma} C_{\gamma} \left[\frac{F/f}{\sum_{i \neq H3} C_i / ECL_i} \right] \times TCF \qquad (9)$$

Where·

$HASP_{RE-3}$	=	high alarm setpoint for RE-3 (cpm)
$BKGD_{RE-3}$	=	background reading for RE-3 (cpm)
(AF)	=	allocation factor for the oily water separator effluent system from Table 6. 1 (0 01)
(SF)	=	safety factor for RE-3 (0 9)
k_{γ}	=	monitor response factor (cpm/μCi/ml)
C_{γ}	=	concentration of gamma emitting isotopes in the release mix, pre-dilution (μCi/ml)
F	=	dilution flow rate (gpm)
f	=	undiluted effluent flow rate (gpm)
C_i	=	concentration of isotope "i," in the release mix, pre-dilution (μCi/ml)
ECL_i	=	effluent concentration limit of isotope "i"
TCF	=	tritium correction factor as defined by Equation 7.

2. Set Point Methodology for RE-18 HASP: Liquid Radwaste System

The High Alarm Set Point for the RE-18 Liquid Radwaste System liquid effluent radiation monitor is calculated as shown in Equation 10.

$$HASP_{RE-18} = BKGD_{RE-18} + (AF)(SF) \times \sum_{\gamma} k_{\gamma} C_{\gamma} \left[\frac{F/f}{\sum_{i \neq H3} C_i / ECL_i} \right] \times TCF \quad \textbf{(10)}$$

Where:

$HASP_{RE-18}$	=	high alarm setpoint for RE-18 (cpm)
$BKGD_{RE-18}$	=	background reading for RE-18 (cpm)
(AF)	=	allocation factor for the liquid radwaste effluent system from Table 6. 1 (0.9)
(SF)	=	safety factor for RE-18 (0 9)
k_{γ}	=	monitor response factor (cpm/μCi/ml)
C_{γ}	=	concentration of gamma emitting isotopes in the release mix, pre-dilution (μCi/ml)
F	=	dilution flow rate (gpm)
f	=	undiluted effluent flow rate (gpm)
C_i	=	concentration of isotope "i," in the release mix, pre-dilution (μCi/ml)
ECL_i	=	effluent concentration limit of isotope "I"
TCF	=	tritium correction factor as defined by Equation 7.

3. Set Point Methodology for RE-23 HASP. Steam Generator Blowdown Tank

The High Alarm Set Point for the RE-23, Steam Generator Blowdown Tank liquid effluent radiation monitor, is calculated as shown in Equation 11.

$$HASP_{RE-23} = BKGD_{RE-23} + (AF)(SF) \times \sum_{\gamma} k_{\gamma} C_{\gamma} \left[\frac{F/f}{\sum_{i \neq H3} C_i / ECL_i} \right] \times TCF \quad \textbf{(11)}$$

Where

$HASP_{RE-23}$	=	high alarm setpoint for RE-23 (cpm)
$BKGD_{RE-23}$	=	background reading for RE-23 (cpm)
(AF)	=	allocation factor for the steam generator blowdown effluent system for each unit from Table 6. 1 (0 04)
(SF)	=	safety factor for RE-23 (0 9)
k_{γ}	=	monitor response factor (cpm/μCi/ml)
C_{γ}	=	concentration of gamma emitting isotopes in the release mix, pre-dilution (μCi/ml)
F	=	dilution flow rate (gpm)
f	=	undiluted effluent flow rate (gpm)
C_i	=	concentration of isotope "i," in the release mix, pre-dilution (μCi/ml)
ECL_i	=	effluent concentration limit of isotope "i"
TCF	=	tritium correction factor as defined by Equation 7.

6 1.4 Dose Projection (for Liquid Effluents)

The projected dose contributions from each reactor unit due to liquid effluents for the current calendar month, quarter and current calendar year must be determined in accordance with the methodology and parameters in the ODCP at least every 31 days.

The purpose of this is to determine if appropriate treatment of liquid radioactive materials in relation to maintaining releases "as low as reasonably achievable," is necessary.

Projections will be made, at least by the end of each month with attention to the frequency requirement contained in the radiological effluent controls program.

The projected dose from each reactor unit is given by:

$$D_P = D_{P,U} + \tfrac{1}{2} D_{P,Com} \qquad \textbf{(12)}$$

Where:

D_P = Projected Dose

$D_{P,U}$ = Projected dose attributed to reactor unit, U.

$D_{P,Com}$ = Projected dose common to both reactor units

The 31-day projected dose is calculated by Equation 13.

$$D_P^M = 31 \times \frac{D_A^{PM} + d_A^{CM} + d_P^{CB}}{(T+t)} \qquad \textbf{(13)}$$

Where

D_P^M = Monthly Projected Dose

D_A^{PM} = Previous Month's Actual Dose

d_A^{CM} = Current Month Actual Dose to date

d_P^{CB} = Projected Dose from Current Batch Release

T = Number of days in the previous month

t = Number of days into the present month

Projected quarterly doses are determined by Equation 14.

$$D_P^{CQ} = d_A^{CQ} + (92 - t)\frac{D_A^{PQ} + d_A^{CQ} + d_P^{CB}}{(T + t)} \quad \textbf{(14)}$$

Where.

D_P^{CQ}	=	Projected dose for the current calendar quarter.
d_A^{CQ}	=	Current quarter to date actual dose
D_A^{PQ}	=	Previous quarter's actual dose.
d_P^{CB}	=	Projected dose as a result of the current batch release
T	=	Number of days in the previous quarter
t	=	Number of days into the present quarter.

Projected yearly doses are determined by Equation 15.

$$D_P^{CY} = d_A^{CY} + (366 - t)\frac{D_A^{PY} + d_A^{CY} + d_P^{CB}}{(T + t)} \quad \textbf{(15)}$$

Where

D_P^{CY}	=	Projected dose for the current calendar year
d_A^{CY}	=	Current year to date actual dose.
D_A^{PY}	=	Previous year's actual dose
d_P^{CB}	=	Projected dose as a result of the current batch release.
T	=	Number of days in the previous year.
t	=	Number of days into the present year

6.1.5 Liquid Limiting Flow Rate Methodology - ECL Based

The maximum effluent flow rate through monitors RE-3, RE-18, and RE-23 as well as for releases from the Condensate Demineralizer Regenerate waste tank or miscellaneous release points is established in order to provide further control over the effluent releases. The release rate limit is determined by the effluent concentration and the 10 CFR 20 Effluent Concentration Limits (ELCs) as shown in Equation 16.

$$f = \frac{F(AF)(SF)(TCF)}{\sum_{i \neq H-3} \frac{C_i}{ECL_i}} \qquad \textbf{(16)}$$

Where:

f	=	Maximum operational undiluted liquid radwaste effluent discharge flow rate (gpm)
F	=	Expected dilution flow rate (gpm)
AF	=	allocation factor for the liquid radwaste effluent source from Table 6. 1
SF	=	safety factor (0.9).
TCF	=	tritium correction factor as defined by Equation 7
C_i	=	concentration of isotopes "i" in the release mix, pre-dilution (μCi/ml)
ECL_i	=	effluent concentration limit of isotope "i" (μCi/ml)

When the term $\sum_{i \neq H-3} \frac{C_i}{ECL_i} = 0$ then the Limiting Flow Rate is calculated by.

$$f = F(AF)(SF)(TCF) \qquad \textbf{(17)}$$

Where the terms are as previously defined.

6.1.6 Liquid Limiting Flow Rates - LLD Based

When there is no primary to secondary leakage, the Oily Water Separator and various miscellaneous release points are assumed to be uncontaminated. Furthermore, in order to establish practical operational flow rate limits for any sources when they are considered uncontaminated, Equation 18 is used. While no activity may be present, Equation 18 assumes a concentration equal to the Lower Limit of Detection for the nuclides listed in CY2 ID1, Appendix 6 1, Table 6 1.3-1

$$f = \frac{F(AF)(SF)}{4.3} \qquad \textbf{(18)}$$

Where:

f	=	Maximum operational undiluted liquid radwaste effluent discharge flow rate (gpm)
F	=	Expected dilution flow rate (gpm)
AF	=	allocation factor for the liquid radwaste effluent source from Table 6 1
SF	=	safety factor (0.9)
4 3	=	Total ECL fraction as given by.

$$\sum_i \frac{LLD_i}{ECL_i}$$

Where.

LLD_i	=	Lower limit of detection for isotope "i" from CY2 ID1, Appendix 6 1, Table 6.1 3-1. (μCi/ml)
ECL_i	=	effluent concentration limit of isotope "i" (μCi/ml)

6.1.7 Unplanned Liquid Releases (Abnormal Releases)

An unplanned release is an unexpected and potentially unmonitored release to the environment due to operational error or equipment malfunctions

a Unmonitored unplanned releases shall have a report written by the Radiochemistry Effluents Engineer describing the event with a calculation, if possible, of the percent of Tech Spec release rate limit This will then be forwarded to PSRC for review. Describe these unplanned releases in the Annual Radioactive Effluent Release Report.

b. Monitored unplanned releases which exceed 1% of the RECP release rate limit will also have a report written describing the event and must be forwarded to the PSRC for review Describe these unplanned releases in the Annual Radioactive Effluent Release Report.

6 2 Gaseous Effluents

The only significant path for gaseous radioactive releases to the environment during normal operations is via the plant vent. This source is used for calculating dose rates and real-time doses to the unrestricted area due to noble gases, vaporous radioiodines and airborne radio-particulates The plant vent also has redundant monitoring for these types of gaseous releases.

Other paths such as the steam generator blowdown tank vent, the chemistry lab fume hood, the main condenser Nash vacuum pump discharge, hot machine shop vent, etc., are considered miscellaneous release sources. These miscellaneous release sources are not continuously monitored but can have dose rates and dose calculated for their path to the unrestricted area.

6.2 1 Meteorological Methodology

The equations for determining gaseous effluent concentration limits, high alarm setpoints, dose rates, and critical receptor doses make use of the historical average atmospheric conditions in accordance with methodologies of Regulatory Guides 1.109 and 1.111 and NUREGs 0133 and 0472. The historical average dispersion (χ/Q) and deposition (D/Q) values are derived from the methodology of Regulatory Guide 1.111 as implemented by NUREG 2019 (computer code XOQDOQ). The DCPP dispersion and deposition values are based on the latest five years of meteorological data and are updated when the value of χ/Q or D/Q changes by more than ten percent. The present values are listed in Table 10 2.

Long-term releases are characterized as those that are generally continuous and stable in release rate, such as normal ventilation systems effluents Doses due to long-term releases are modeled using historical annual average dispersion and deposition values in accordance with the guidance of Regulatory Guide 1 109, Regulatory Guide 1 111, NUREG 0133 and NUREG 0472.

Short-term releases are defined as those which occur for a total of 500 hours or less in a calendar year but not more than 150 hours in any quarter In accordance with NUREG 0133 and based upon an operational history that has demonstrated short term gaseous releases can be characterized as random in both time of day and duration, historical average atmospheric dispersion and deposition values are used to model doses due to short-term releases

6.2 2 Gas Effluent Concentration Limits

a. Philosophy of Concentration Limits

The radiological effluent controls restrict at all times the dose rate due to radioactive materials released in gaseous effluents from the site to areas at or beyond the site boundary for noble gases to less than or equal to 500 mrem/yr to the total body and 3000 mrem/yr to the skin For iodine-131, iodine-133, tritium and for all radionuclides in particulate form with half-lives greater than 8 days, the dose rate is limited to less than or equal to 1500 mrem/yr to any organ

These dose rate limits act to restrict at all times the instantaneous concentrations of radionuclides in gaseous effluents at the site boundary.

1 Allocation and Safety Factors

The limits set forth by RECP 6.1.6.1 are site limits which require that the set point methodology must ensure simultaneous releases do not exceed the off-site dose rate limits set forth by RECP 6.1.6.1(a) and 6.1.6 1(b) The DCPP High Alarm Set Point methodology makes use of an Allocation Factor (AF) to limit the noble gas effluent dose rate from simultaneous atmospheric releases.

The Allocation Factors can be adjusted based upon operational requirements with the following restrictions:

The sum of the Allocation Factors for RE-14, the SGBD tank vents, and miscellaneous release points from both units must be less than or equal to 1.

The Allocation Factors for RE-22 (Waste Gas Decay Tanks) and RE-44 (Containment Purge) can also be adjusted based upon operational requirements with restriction that the sum of the Allocation Factors for RE-22 and RE-44 must be less than or equal to the Allocation Factor for RE-14.

The Allocation Factors for RE-24 (Plant Vent Iodine Monitor) and RE-28 (Plant Vent Particulate Monitor) are set equal to the Allocation Factor for RE-14

Typical Allocation Factors are shown in Table 6 2.

Table 6. 2

Typical Gaseous Effluent Discharge Pathway Allocation Factors

Discharge Pathway	Rad Monitor	Allocation Factor (AF)
Plant Vent - NG Monitor	RE-14	0 48
Plant Vent Iodine Monitor	RE-24	0 48
Plant Vent Part Monitor	RE-28	0 48
Waste Gas Decay Tank	RE-22	0 10
Containment Purge	RE-44	0 38
SGBD Tank Vent		0 01
Miscellaneous		0 01

An additional level of conservatism in the HASP methodology is implemented by the use of a Safety Factor (SF). The Safety Factor is defined as 0 9 and provides for a High Alarm Set Point at 90% of the dose rate limits

b. Gaseous Effluent Radiation Monitor Set Points

1. **PLANT VENT NOBLE GAS MONITOR - RE-14 HASP**

The Plant Vent effluent stream is monitored by rad monitor RE-14. RE-14 provides alarm function only.
The High Alarm Set Point methodology for RE-14 is given by Equation 19.

$$^{14Max}C_T(NG) = AF \times SF \times \frac{500}{472 \times F_{pv} \times \left(\overline{\chi/Q}\right)_{Max} \times 294} \quad \textbf{(19)}$$

Where

$^{14Max}C_T(NG)$ = the maximum allowable total concentration of noble gas in the plant vent, in μCi/cc

AF = the allocation factor for the plant vent for one unit from Table 6. 2 (0.48)

SF = a safety factor to ensure that dose rate limits of the radiological effluent controls are not exceeded (0.9)

500 = (mrem/yr) the site Total Body dose rate limit for instantaneous releases

472 = the conversion constant to cc/sec from cfm

F_{pv} = total flow rate in the plant vent, in cfm (maximum plant vent flow rate is 263,000 cfm)

$\left(\overline{\chi/Q}\right)_{Max}$ = the maximum historical site boundary dispersion factor, based on 5 year averages derived from the meteorological data base, from Table 10 2

294 = the whole body dose factor (mrem/yr/μCi/m^3) for Xe-133 as presented in Table 10.3, (for the plant vent HASP, the release is assumed to be all Xe-133)

2. PLANT VENT NOBLE GAS MONITOR - RE-14 SCALING

In order to correlate the readings of RE-14 to noble gas concentration during periods between samplings, the concentration is scaled according to Equation 20.

$$C_T = \frac{CPM_T}{CPM_S} \times C_S \qquad \textbf{(20)}$$

Where

CPM_T = RE-14 time weighted arithmetic mean (cpm)

CPM_S = RE-14 gross count rate at the time of sampling (cpm)

C_S = Concentration of noble gas corresponding to CPM_S, based upon noble gas grab sample (μCi/cc).

C_T = Scaled concentration of noble gas (μCi/cc).

3. PLANT VENT IODINE MONITOR - RE-24

The Plant Vent Iodine concentration is monitored by rad monitor RE-24. RE-24 provides alarm function only. The alarm setpoint methodology is based upon the assumption that RE-24 responds only to I-131 The methodology also presumes a release mixture based upon the RCS source term

The High Alarm Set Point methodology of RE-24 is given by Equation 21.

$$^{24Max}C_T(Iodine) = SF \times AF \times f_{I-131} \frac{1500}{472 \times F_{pv} \times \left(\overline{\chi/Q}\right)_{Max} \sum_i P_i^w f_i} \quad \textbf{(21)}$$

Where.

$^{24\,Max}C_T$(Iodine) = the maximum allowable concentration of I-131 in the plant vent

AF = The allocation factor for the plant vent for one unit from Table 6. 2 (0.48)

SF = A safety factor to insure that the dose rate limits of the radiological effluent controls are not exceeded (0.9).

f_{I-131} = fraction of the total non-noble gas concentration that is due to I-131. Defined as·

$$f_{I-131} = \frac{C_{I-131}}{\sum_i C_i} \quad \textbf{(22)}$$

1500 = (mrem/yr) the site organ dose rate limit for Iodine-131, for Iodine-133, for tritium, and for all radioactive materials in particulate form with half-lives greater than 8 days

472 = the conversion constant to cc/sec from cfm

F_{pv} = total flowrate in the plant vent, in cfm (maximum plant vent flowrate is 263,000 cfm)

$\overline{(\chi/Q)}_{Max}$ = maximum historical site boundary dispersion factor, based on 5 year averages derived from the meteorological database, from Table 10.2

P_i^w = Inhalation dose factor for nuclide "i" (mrem/yr/μCi/m^3) for child age group for worst case organ, from Table 10 4 Dose factors are based upon NUREG 0133 methodology Inhalation dose conversion factors are taken from Reg. Guide 1.109, Rev 1, Table E-9, with the following exceptions: H-3, Sb-124 and Sb-125 inhalation dose conversion factors taken from NUREG/CR-4013.

f_i = fraction of total non-noble gas concentration (excluding tritium) that is due to nuclide, i, and defined as:

$$f_i = \frac{C_i}{\sum_i C_i} \qquad (23)$$

4. PLANT VENT PARTICULATE MONITOR - RE-28

The Plant Vent Particulate concentration is monitored by rad monitor RE-28 The alarm setpoint methodology is based upon the assumption of a 5% cross talk from the iodine channel This is due to the retention of a small portion of iodine on the particulate filter. A release mixture based upon the RCS source term is also assumed

The High Alarm Set Point methodology for RE-28 is given by Equation 24.

$$^{28Max}C_T(Particulates) = AF \times SF \times \left(0.05 \times \sum_{Iodines} f_{Iodines} + \sum_{Particulates} f_{Particulates}\right) \times \frac{1500}{472 \times F_{pv} \times \left(\overline{\chi/Q}\right)_{Max} \sum_i P_i^w f_i} \quad (24)$$

Where:

$^{28\,Max}C_T$(Particulate)	=	Maximum allowable particulate concentration in the plant vent
AF	=	The allocation factor for the plant vent for one unit from Table 6. 2 (0.48)
SF	=	A safety factor to insure that the dose rate limits of the radiological effluent controls are not exceeded (0.9)
0 05	=	Fraction of total iodine activity retained on particulate filter.
$f_{Iodines}$	=	Fraction of the total non-noble gas concentration that is due to iodines.
$f_{Particulates}$	=	Fraction of the total non-noble gas concentration that is due to particulates.
1500	=	(mrem/yr) the site organ dose rate limit for Iodine-131, for Iodine-133, for tritium, and for all radioactive materials in particulate form with half-lives greater than 8 days.
472	=	Conversion constant to cc/sec from cfm
F_{pv}	=	Total flowrate in the plant vent, in cfm (maximum plant vent flowrate is 263,000 cfm)

$\left(\overline{\chi/Q}\right)_{Max}$ = Maximum historical site boundary dispersion factor, based on 5 year averages derived from the meteorological database, from Table 10.2

P_i^w = Inhalation dose factor for nuclide "i" (mrem/yr/μCi/m^3) for child age group for worst case organ, from Table 10.4. Dose factors are based upon NUREG 0133 methodology. Inhalation dose conversion factors are taken from Reg. Guide 1 109, Rev 1, Table E-9, with the following exceptions· H-3, Sb-124 and Sb-125 inhalation dose conversion factors taken from NUREG/CR-4013.

f_i = Fraction of total non-noble gas concentration (excluding tritium) that is due to nuclide, i, as defined by Equation 23.

5 **WASTE GAS DECAY TANK MONITOR - RE-22 HASP**

Effluent releases from the Waste Gas Decay Tank are monitored by rad monitor RE-22. RE-22 provides alarm and automatic release termination functions.

The High Alarm Set Point methodology for RE-22 is given by Equation 25.

$$^{22Max}C_T(NG) = AF \times SF \times \frac{3000}{472 \times F_{gdt} \times \left(\overline{\chi/Q}\right)_{Max} \times 1.34 \times 10^3} \quad \textbf{(25)}$$

Where:

$^{22Max}C_T(NG)$ = the maximum allowable total concentration of noble gas in the gas decay tank exhaust line, in μCi/cc

AF = the allocation factor for the waste gas decay tank for one unit from Table 6. 2 (0 10)

SF = safety factor to ensure that dose rate limits of the radiological effluent controls are not exceeded (0 9)

3000 = (mrem/yr) the site Skin dose rate limit for instantaneous releases

472 = the conversion constant to cc/sec from cfm

F_{gdt} = maximum flow rate for the gas decay tank system (31 cfm)

$\left(\overline{\chi/Q}\right)_{Max}$ = the maximum historical site boundary dispersion factor, based on 5 year averages derived from the meteorological data base from Table 10.2.

1.34×10^3 = the skin dose factor for Kr-85 (mrem/yr/ μCi/m^3, from Table 10 3.

6. CONTAINMENT PURGE - RE-44 HASP

The Containment Purge is monitored by rad monitor RE-44. RE-44 provides alarm and automatic release termination functions.

The HASP for RE-44 must limit the noble gas dose rate for skin and total body exposure In order to address this, two set points are calculated. One set point is calculated based upon limiting the total body dose rate and the other limits the skin dose rate. The more limiting set point is used. The High Alarm Set Point methodology for RE-44 is given by Equations 26 and 27

a) Limiting Concentration Based on Total Body Dose

$$^{44A/BMax}C_T(NG) = AF \times SF \times \frac{500}{472 \times F_{ct} \times \left(\overline{\chi/Q}\right)_{Max} \times \sum K_i f_i(NG)} \quad \textbf{(26)}$$

Where:

$^{44A/BMax}C_T(NG)$ = the maximum allowable total concentration of noble gas in the containment purge exhaust line, in μCi/cc

AF = the allocation factor for the containment purge for one unit from Table 6. 2 (0 38)

SF = safety factor to ensure that dose rate limits of radiological effluent controls are not exceeded (0 9)

500 = (mrem/yr) the site Total Body dose rate limit for instantaneous releases

472 = the conversion constant to cc/sec from cfm

F_{ct} = maximum flow rate in the containment purge system (maximum containment purge flowrate is 55,000 cfm)

$\left(\overline{\chi/Q}\right)_{Max}$ = the maximum historical site boundary dispersion factor, based on 5 year averages derived from the meteorological data base averages, from Table 10 2.

K_i = whole body dose factor (mrem/yr/μCi/m^3) for isotope "i " Dose factors are presented in Table 10.3.

f_i = the fraction of the concentration of the individual noble gas radionuclide, "i," in the total mix of noble gas effluents in the containment purge line.

b) Limiting Concentration Based on Skin Dose

Skin dose should be calculated whenever an RCS sample contains a significant fraction of Kr-85.

The concentration limit calculated by this method should then be compared to the concentration limit calculated for total body dose The smaller concentration should be selected as the limiting concentration for the HASP.

$$^{44A/BMax}C_T(NG) = AF \times SF \times \frac{3000}{472 \times F_{ct} \times \left(\overline{\chi/Q}\right)_{Max} \times \sum_i (L_i + 1.1M_i) f_i(NG)} \quad (27)$$

Where.

$^{44A/BMax}C_T(NG)$ = the maximum allowable total concentration of noble gas in the plant vent in μCi/cc

AF = the allocation factor for the containment purge for one unit from Table 6. 2 (0.38)

SF = safety factor to ensure that dose rate limits of the radiological effluent controls are not exceeded (0.9)

3000 = (mrem/yr) the site skin dose rate limit for instantaneous releases.

472 = the conversion constant to cc/sec from cfm

F_{ct} = total flow rate in the containment purge system, in cfm (maximum containment purge flow rate is 55,000 cfm)

$\left(\overline{\chi/Q}\right)_{Max}$ = the maximum historical site boundary dispersion factor, based on 5 year averages derived from the meteorological data base averages, from Table 10.2.

L_i = the skin dose factor (mrem/yr per $\mu Ci/m^3$) for isotope "i." Dose factors are presented in Table 10.3.

1.1 = Conversion factor mrem/mrad. Converts air dose to skin dose

M_i = the gamma air dose factor (mrad/yr per $\mu Ci/m^3$) for isotope 'i " Dose factors are presented in Table 10.3.

f_i = the fraction of the concentration of the individual noble gas radionuclide, "i," in the total mix of noble gas effluents in the containment purge line

c. Mode 6 Particulate activity.

The HASP calculation specified in this section based upon Noble Gas effluent limitations conservatively bounds the Tech. Spec. requirement for particulate activity in Mode 6. The FSAR expected case accident for Mode 6 is a containment fuel handling accident which does not include a particulate release. Therefore, the HASP for RM-44 in this section conservatively satisfies the Tech Spec (Ref. 8 15)

6.2.3 Gaseous Dose Rate Calculation Methodology

a Total Body Noble Gas Dose Rate Methodology

The dose rate to the total body due to immersion in a cloud of noble gases is given by:

$$\left(\overline{\chi/Q}\right)_{Max} \sum_{i} K_i \dot{Q}_i \leq 500 \text{ mrem/year} \qquad \textbf{(28)}$$

Where:

$\dot{Q}_i$ = The release rate of radionuclide i in units of μCi/sec.

All other terms are as previously defined.

b Skin Dose Rate Methodology

The dose rate to the skin due to immersion in a cloud of noble gases is given by.

$$\left(\overline{\chi/Q}\right)_{Max} \sum_{i} (L_i + 1.1 M_i) \dot{Q}_i \leq 3000 \text{ mrem/year} \qquad \textbf{(29)}$$

Where the terms are as previously defined

c Radioiodine, Tritium and Particulate Dose Rate Methodology

The dose rate to organ, o, due to radioiodines, tritium and particulates released in gaseous effluents is given by.

$$\left(\overline{\chi/Q}\right)_{Max} \sum_{i} P_{io} \dot{Q}_i \leq 1500 \text{ mrem/year} \qquad \textbf{(30)}$$

Where:

P_{io} = $K'(BR)DFA_{io}$

and

K' = 10^6 ρCi/μCi

BR = The breathing rate of the a child age group in m^3/yr The default value of 3700 m^3/yr is taken from Table E-5 of Reg. Guide 1 109.

DFA_i = The inhalation dose factor for organ o, for the child age group for radionuclide, i, from Table E-9 of Reg. Guide 1.109 in mrem/ρCi, with the following exceptions· H-3, Sb-124 and Sb-125 inhalation dose conversion factors taken from NUREG/CR4013.

All other terms are as previously defined.

Values for P_{io} are listed in Table 10 6.

6.2.4 Noble Gas Air Dose Calculation Methodology

a Gamma Air Dose

The gamma air dose due to immersion in a cloud of noble gases is given by

$$D_{a\gamma} = 3.17\times10^{-8}\left(\overline{\chi/Q}\right)_{Max}\sum_i M_i\tilde{Q}_i \qquad (31)$$

Where·

$D_{a\gamma}$ = Gamma air dose in mrad.

$3\ 17\times10^{-8}$ = Conversion constant yr/sec.

M_i = Gamma air dose factor for nuclide i, in mrad/yr per $\mu Ci/m^3$. Values are listed in Table 10.3.

$\tilde{Q}_i$ = Total release of noble gas radionuclide, i, in μCi.

All other terms are as previously defined

b Beta Air Dose

The beta air dose due to immersion in a cloud of noble gases is given by

$$D_{a\beta} = 3.17\times10^{-8}\left(\overline{\chi/Q}\right)_{Max}\sum_i N_i\tilde{Q}_i \qquad (32)$$

Where

$D_{a\beta}$ = Beta air dose in mrad.

N_i = Beta air dose factor for nuclide i, in mrad/yr per $\mu Ci/m^3$. Values are listed in Table 10 3.

All other terms are as previously defined.

6.2.5 Dose To Critical Receptor Due To Radioiodines, Tritium and Particulates Released in Gaseous Effluents

a Calculation Methodology

The dose to an individual (critical receptor) due to radioiodines, tritium and particulates released in gaseous effluents with half-lives greater than 8 days is determined based upon the methodology described in NUREG 0133. This methodology makes use of the maximum individual concept described in Regulatory Guide 1.109. The maximum individual is characterized as maximum with regard to food consumption, occupancy, and other usage parameters. This concept therefore models those individuals within the local population with habits representing reasonable deviations from the average. In all physiological and metabolic respects, the maximum individual is assumed to have those characteristics that represent the average for the age group of interest

The concept of critical receptor is introduced as a further refinement of the maximum individual. The critical receptor is defined as that individual that receives the largest dose based upon the combination of dose pathways that have been shown to actually exist. The critical receptor concept is applied at that location where the combination of dispersion (χ/Q), deposition (D/Q), existing pathways, occupancy time, receptor age group, and effluent source term indicates the maximum potential exposure The inhalation and ground plane exposure pathways are considered to exist at all locations. The grass-cow-milk, grass-cow-meat, and vegetation pathways are considered based on their actual existence in the vicinity of the plant.

The dose pathways that have been shown to actually exist at DCPP are the ground plane, inhalation and the vegetation pathways These dose pathways are reviewed yearly and updated based upon the annual land use census survey in order to insure that actual exposure to an individual will not be substantially underestimated.

The locations of the pathways and descriptions are listed in Table 10.2.

b Dose Calculation

The dose contributions to the total body and each individual organ (bone, liver, thyroid, kidney, lung and GI-LLI) of the maximum exposed individual (Critical Receptor) due to radioactive gaseous effluent releases is calculated for all radionuclides identified in gaseous effluents released to unrestricted areas using the following expression:

$$D_{apo} = 3.17 \times 10^{-8} \overline{W}_{CR} \sum_i R_{aipo} \tilde{Q}_i \qquad (33)$$

Where.

D_{apo} = Dose to the critical receptor for age group a, pathway p, and organ o, in mrem

$\overline{W}_{CR}$ = Critical receptor $\overline{\chi/Q}$ for immersion, inhalation and all tritium pathways (seconds/m^3) from Table 10.2

= Critical receptor $\overline{D/Q}$ for ground plane and all ingestion pathways (1/m^2) from Table 10.2.

R_{aipo} = Site specific dose factor for age group a, radionuclide i, pathway p, and organ j (mrem/yr per μCi/m^3 for inhalation and tritium pathways - mrem/yr per μCi/(sec m^2) for ground plane and ingestion pathways). These dose factors are listed in Table 10 6.

The site specific dose factors are calculated based upon NUREG 0133 methodology. All dose conversion factors are taken from Reg. Guide 1.109, Rev 1, Tables E6-E14, with the following exceptions H-3, Sb-124 and Sb-125 dose conversion factors taken from NUREG/CR-4013.

$\tilde{Q}_i$ = The total release of radionuclide i, in units of μCi.

6.2.6 Noble Gas Gaseous Radioactive Waste (GRW) Batch Release Percent Release Rate Limits (PRRLs) and Expected Reading (ER)

The Percent Release Rate Limit (PRRL) for noble gas releases for each unit is calculated based upon the 500 mrem/yr whole body dose rate limit, and is given by Equation 34.

$$PRRL = \frac{\left(\overline{\chi/Q}\right)_{Max} \sum_i K_i \dot{Q}_i}{(0.48)(500 mrem/yr)} \times 100\% \qquad \textbf{(34)}$$

Where:

$\left(\overline{\chi/Q}\right)_{Max}$ = The maximum site boundary dispersion factor based on 5 year averages from Table 10 2.

K_i = Whole body dose factor (mrem/yr per $\mu Ci/m^3$) for isotope "i." Dose factors are presented in Table 10 3.

$\dot{Q}_i$ = Total release rate of isotope "i" from all sources discharged through this release point in μCi/sec.

0.48 = Plant vent allocation factor for one unit from Table 6 2.

500 mrem/yr = Site noble gas dose rate limit

The Expected Reading (ER) is the anticipated monitor response based upon the known plant vent concentration and the monitor response factors The Expected Readings for RE-22, RE-44, RE-14 are given by Equations 35, 36, and 37.

$$ER_{(RE-22)} = BKG_{(RE-22)} + \sum_i k_{(RE-22)\,i} C_{(RE-22)\,i} \qquad \textbf{(35)}$$

Where:

$ER_{(RE-22)}$ = Expected reading on monitor RE-22 in μCi/cc.

$BKG_{(RE-22)}$ = Monitor background.

$k_{(RE-22)i}$ = Noble gas monitor response factor for nuclide "i" for monitor RE-22

$C_{(RE-22)i}$ = Concentration of nuclide "i" seen by RE-22

$$ER_{(RE-44)} = BKG_{(RE-44)} + CCSP_{(RE-44)} \sum_i k_{(RE-44)\,i} C_{(RE-44)\,i} \qquad \textbf{(36)}$$

Where.

$ER_{(RE-44)}$ = Expected reading on monitor RE-44 in μCi/cc

$BKG_{(RE-44)}$ = Monitor background

$CCSP_{(RE-44)}$ = Conversion constant setpoint for monitor RE-44.

$k_{(RE-44)i}$ = Noble gas monitor response factor for nuclide "i" for monitor RE-44.

$C_{(RE-44)i}$ = Concentration of nuclide "i" seen by monitor RE-44

$$ER_{(RE-14)} = BKG_{(RE-14)} + CCSP_{(RE-14)} \sum_i k_{(RE-14)\,i} C_{(RE-14)\,i} \qquad \textbf{(37)}$$

Where:

$ER_{(RE-14)}$ = Expected reading on monitor RE-14 in μCi/cc.

$BKG_{(RE-14)}$ = Monitor background

$CCSP_{(RE-14)}$ = Conversion constant setpoint for monitor RE-14

$k_{(RE-14)i}$ = Noble gas monitor response factor for nuclide "i" for monitor RE-14

$C_{(RE-14)i}$ = Concentration of nuclide "i" seen by monitor RE-14

Generally if the Expected Reading (ER) is greater than the existing HASP setting (an "administrative limit" as set by CY2.DC1) then no release should be made until a calculation shows that the HASP (Admin Limit) can be raised so the release can be legally discharged. On the other hand should the ER be less than the existing HASP (Admin Limit), then the release can be discharged.

6.2.7 IPT - PRRL

The Percent Release Rate Limit (PRRL) for radioiodines, tritium and particulates for each unit is calculated based upon the 1500 mrem/yr organ dose rate limit. The dose rate is calculated for the inhalation pathway to the child age group using the highest (worst case) organ dose factor for nuclide. The Percent Release Rate Limit based on the worst case organ is given by Equation 38.

$$PRRL_o = \frac{\left(\overline{\chi/Q}\right)_{Max} \sum_i P_i^w \dot{Q}_i}{(0.48)(1500 mrem/yr)} \times 100\% \qquad \textbf{(38)}$$

Where.

$\left(\overline{\chi/Q}\right)_{Max}$ = The maximum site boundary dispersion factor based on 5 year averages from Table 10 2.

P_i^w = Inhalation dose factor for nuclide "i" (mrem/yr/μCi/m^3) for child age group for worst case organ, from Table 10 4. Dose factors are based upon NUREG 0133 methodology. Inhalation dose conversion factors are taken from Reg. Guide 1.109, Rev 1, Table E-9, with the following exceptions: H-3, Sb-124 and Sb-125 inhalation dose conversion factors taken from NUREG/CR-4013.

$\dot{Q}_i$ = Release rate of isotope "i" in μCi/sec.

0.48 = Plant vent location factor for one unit from Table 6. 2

1500 mrem/yr = Site radioiodine, tritium and particulate dose rate limit

6.2 8 Alternate Dose Methodologies

For purposes of routine gaseous effluent dose assessment, the methodology of NUREG 0133 (described in Section 6 2 5) will be used. However, DCPP may elect to utilize the dose methodologies of Regulatory Guide 1.109 or the GASPAR computer code for special purposes such as evaluation of potential new gaseous effluent dose pathways or critical receptors.

6.2.9 Gas Effluent Dose Projection

The projected dose contributions from each reactor unit due to gaseous effluents for the current calendar month, quarter and current calendar year must be determined in accordance with the methodology and parameters in the ODCP at least every 31 days

The computer program, Radioactive Effluent Management System (REMS), is used for this projection. Therefore, by the first day of the year, the following tables in REMS need to be updated·

- GRW dose receptor
- GRW dose rate receptor
- GRW external dose select
- GRW internal dose select
- GRW internal occupancy

The purpose of this is to determine if appropriate treatment of gaseous radioactive materials in relation to maintaining releases "as low as reasonably achievable," is necessary.

Projections will be made, at least by the end of each month with attention to the frequency requirement contained in radiological effluent controls program.

The projected dose from each reactor unit is given by:

$$D_P = D_{P,U} + \tfrac{1}{2} D_{P,Com} \qquad \textbf{(39)}$$

Where:

D_P = Projected Dose

$D_{P,U}$ = Projected dose attributed to reactor unit, U.

$D_{P,Com}$ = Projected dose common to both reactor units

The 31 day projected dose is calculated by Equation 40.

$$D_P^M = 31 \times \frac{D_A^{PM} + d_A^{CM} + d_P^{CB}}{(T+t)} \quad \textbf{(40)}$$

Where.

D_P^M = Projected Dose for the next 31 day period

D_A^{PM} = Previous Month's Actual Dose

d_A^{CM} = Current Month Actual Dose to date

d_P^{CB} = Projected Dose from Current Batch Release

T = Number of days in the previous month

t = Number of days into the present month

Projected quarterly doses are determined by Equation 41

$$D_P^{CQ} = d_A^{CQ} + (92 - t)\frac{D_A^{PQ} + d_A^{CQ} + d_P^{CB}}{(T+t)} \quad \textbf{(41)}$$

Where

D_P^{CQ} = Projected dose for the current calendar quarter

d_A^{CQ} = Current quarter to date actual dose.

D_A^{PQ} = Previous quarter's actual dose

d_P^{CB} = Projected dose as a result of the current batch release

T = Number of days in the previous quarter

t = Number of days into the present quarter.

Projected yearly doses are determined by Equation 42

$$D_P^{CY} = d_A^{CY} + (366 - t)\frac{D_A^{PY} + d_A^{CY} + d_P^{CB}}{(T + t)} \quad (42)$$

Where:

D_P^{CY} = Projected dose for the current calendar year.

d_A^{CY} = Current year to date actual dose.

D_A^{PY} = Previous year's actual dose.

d_P^{CB} = Projected dose as a result of the current batch release.

T = Number of days in the previous year.

t = Number of days into the present year.

6.2 10 Unplanned Gaseous Releases (Abnormal Releases)

a An unplanned release is an unexpected and potentially unmonitored release to the environment due to operational error or equipment malfunctions.

1 Unmonitored unplanned releases shall have a report written by the Radiochemistry Effluents Engineer describing the event with a calculation, if possible, of the percent of RECP release rate limit. This will then be forwarded to PSRC for review. Describe these unplanned releases in the Annual Radioactive Effluent Release Report.

2. Monitored unplanned releases which exceed 1% of the RECP release rate limit will also have a report written describing the event and must be forwarded to the PSRC for review. Describe these unplanned releases in the Annual Radioactive Effluent Release Report. For purposes of classification only, unplanned release puffs through the plant vent may use one hour integrated resolution times.

6.3 40 CFR 190 Dose Calculations

6.3 1 Pathways

Calculation of total uranium fuel cycle dose for purposes of demonstrating compliance with 40 CFR 190 requires the contributions from liquid and gaseous effluent as well as direct radiation from the units and outside storage tanks to be considered. The total uranium fuel cycle dose to any member of the public will be calculated by summing the following doses:

- Direct Radiation Dose
- Liquid Effluent Dose
- Noble Gas Dose
- Radioiodine, Tritium and Particulate Gaseous Effluent Dose

6 3.2 Methodology

a. Direct Radiation Dose

Determination of direct radiation dose from the reactor units and from outside storage tanks may be made by direct survey measurements, derived from environmental TLD data, or calculated by shielding code

The direct radiation dose will also take into account residence times near the site based upon land use census information.

The direct radiation determination using environmental TLD is given by equation 43.

$$D'_{sb} = \left[\frac{r_{adj}}{800}\right]^2 D'_{r_o} \times (9.57) \times e^{-(6.38)} \qquad (43)$$

where.

D'_{sb} = the dose rate at the site boundary, in mrem

D'_{ro} = the dose rate from the dosimetry reading, in mrem

r_{adj} = the distance from the point source to the dosimetry, in meter

800 = the distance from the point source to site boundary, in meter

b. Noble Gas Dose

The noble gas skin dose and total body dose contributions to the total uranium fuel cycle dose to a member of the public will be determined as shown in Equations 44 and 45.

$$\text{Noble Gas Total Body Dose} = 3.17\times10^{-8}\left(\overline{\chi/Q}\right)_R \sum_i K_i \tilde{Q}_i \qquad \textbf{(44)}$$

$$\text{Noble Gas Skin Dose} = 3.17\times10^{-8}\left(\overline{\chi/Q}\right)_R \sum_i (L_i + 1.1M_i)\tilde{Q}_i \qquad \textbf{(45)}$$

Where:

3.17×10^{-8} = Conversion constant yr/sec.

$\left(\overline{\chi/Q}\right)_R$ = Maximum historical dispersion factor for receptor of interest, based on 5 year averages from Table 10.2.

K_i = Whole body dose factor for nuclide i, in mrem/yr per $\mu Ci/m^3$. Values are listed in Table 6 3.

L_i = Skin dose factor for nuclide i, in mrem/yr per $\mu Ci/m^3$ Values are listed in Table 6 3.

1.1 = Conversion factor mrem/mrad. Converts air dose to skin dose.

M_i = Gamma air dose factor for nuclide i, in mrad/yr per $\mu Ci/m^3$. Values are listed in Table 10 3.

$\tilde{Q}_i$ = Total release of noble gas radionuclide, i, in μCi/sec.

c Liquid and Gaseous Effluent Dose

The doses from liquid effluents and radioiodines, tritium and particulates in gaseous effluents will be determined by Equations 1 and 33, respectively.

For purposes of calculating the dose required by the radiological effluent controls, more realistic assumptions concerning the liquid and gaseous effluent dose pathways will be used, based upon the most recent land use census data as well as the latest environmental monitoring information.

These assumptions may include, but not be limited to· more realistic liquid dilution factors, location and age of actual individuals, site specific food pathway parameters, and documentation of true food consumption. Other assumptions may be used provided they can be substantiated by census or direct measurement.

6.4 On-Site Dose to Members of the Public

Members of the public are occasionally granted access within the site boundary, but only in the owner controlled area up to the protected area boundary. The most common public access activities are. tours to the simulator (training building) or Bio Lab, policemen using the shooting range (most frequent activity), cattle drives through to adjacent properties, and visits of American Indians to on-site burial grounds (closest to the plant).

Exposure to members of the public due to liquid releases while on-site is highly unlikely and therefore not addressed. Exposure due to gaseous releases and direct radiation are credible and therefore are considered.

The dose to members of the public during on-site activities will be primarily determined by the duration of the on-site visitation time and by the closest proximity to the plant.

For gaseous releases the doses are calculated using Equations 44, 45 and 33 The R_i's in Equation 33 consider only the inhalation and ground plane pathway and exclude the infant age group

The X/Q and D/Q values are modified using logarithmic extrapolation from the site boundary to the on-site location of interest as shown in Equations 46 and 47

$$\log[X/Q]_{on\text{-}site} \approx \frac{\log[X/Q]_{S.B.} - \log[X/Q]_{loc.}}{\log(dist.S.B.) - \log(dist.loc.)}\left[\log(dist.on\text{-}site) - \log(dist.S.B.)\right] + \log[X/Q]_{S\,B} \quad (46)$$

$$\log[D/Q]_{on\text{-}site} \approx \frac{\log[D/Q]_{S.B.} - \log[D/Q]_{loc.}}{\log(dist.S.B.) - \log(dist.loc.)}\left[\log(dist.on\text{-}site) - \log(dist.S.B.)\right] + \log[D/Q]_{S\,B} \quad (47)$$

Based upon Regulatory Guide 1.111, these equations can be expected to provide reasonable dispersion and deposition estimates for distances as close as 200 meters.

Determination of direct radiation dose from the reactor units and from outside storage tanks may be made by direct survey measurements, derived from environmental TLD data, or calculated by shielding code.

A distance of 200 meters from the plant (both units) equidistant from the plant vent is arbitrarily selected as the closest perimeter for which on-site doses will be calculated.

The activities of the members-of-the-public while on-site (described above), are at or beyond 200 meters. Table 6. 3 details the types of on-site activities that members-of-the-public might be expected to participate in at DCPP The sectors and closest distances in which they may visit as well as expected visitation duration are also shown (based on Security Section information)

Table 6. 3

Expected On-Site Distances and Visitation Times for Members of the Public

ONSITE MEMBER OF THE PUBLIC	SECTOR OF VISITATION	CLOSEST POINT OF APPROACH TO PLANT	AVERAGE EXPECTED VISITATION TIME PER YEAR
Police at shooting range	SE	700m	208 hours
Tour Participants			
Simulator Bldg	S (SE)	310m	4 hours
Bio Lab	SSE (SE)	460m	6 hours
Overlook	E	210m	1 hours
American Indians at burial grounds	NW NNW	200m 200m	96 hours 96 hours
Ranch hands driving cattle around site	NW NNW N NNE NE	250m 350m 320m 450m 630m	1 hour 1 hour 1 hour 1 hour 1 hour

7 ACCEPTANCE CRITERIA

7 1 There is no quantitative acceptance for this procedure. If the task or analysis has been accomplished within the bounds of this procedure, it is considered acceptable.

8 REFERENCES

8.1 Draft Radiological Tech Specs for PWRs, NUREG No. 0472, May 1978.

8 2 Calculation of Annual Doses to Man From Routine Releases of Reactor Effluents for the Purpose of Evaluating Compliance with 10 CFR 50, Appendix I, Regulatory Guide 1 109, Rev. 0, March 1976

8.3 Calculation of Annual Doses to Man From Routine Releases of Reactor Effluents for the Purpose of Evaluating Compliance with 10 CFR 50, Appendix I, Regulatory Guide 1.109, Rev 1, October 1977.

8.4 Preparation of Radiological Effluent Tech Specs for Nuclear Power Plants, NUREG No 0133, October 1978

8 5 LADTAP II - Technical Reference and User Guide, NUREG/CR-4013.

8 6 Methods for Demonstrating LWR Compliance with the EPA Uranium Fuel Cycle Standard 40 CFR 190, NUREG No. 0543, January 1980.

8.7 Methods for Estimating Atmospheric Transport and Dispersion of Gaseous Effluents in Routine Releases from Light-Water-Cooled Reactors, Regulatory Guide, 1.111, Rev. 1, July, 1977

8.8 Radioactive Decay Data Tables, David C. Kocher DOE/TIC-11026, 1981.

8 9 CAP A-6, "Gaseous Radwaste Discharge Management."

8 10 CAP A-5, "Liquid Radwaste Discharge Management "

8.11 CAP D-15, "Steam Generator Leak Rate Determination."

8.12 CAP D-19, "Correlation of Rad Monitors to Radioactivity."

8.13 CY2 DC1, "Radiation Monitoring System High Alarm Setpoint Control Procedure "

8.14 CY2 ID1, "Radiological Effluent and Controls Program" (RECP)

8.15 "Setpoint Calculation for Containment Ventilation Exhaust Monitor," Calc # NSP-1&2-39-44, 10/92 and 11/92 and AR A0430610.

9. RECORDS

9.1 Data Sheets and records will be maintained in the Records Management System (RMS) in accordance with CY1.DC1, "Analytical Data Processing Responsibilities "

10. APPENDICES

10.1 Tables

11 ATTACHMENTS

11.1 "Liquid Discharges (LRW) Monitored for Radioactivity," 10/04/00.

11.2 "Gaseous Releases (GRW) Monitored for Radioactivity," 10/04/00.

12 SPONSOR

John Knemeyer

TABLE 10.1

LRW COMPOSITE DOSE FACTORS[1], A_{io},
FOR ADULTS AT A SALTWATER SITE
(mrem/hour per µCi/ml)
organ "o"

Nuclide	Tot Body	Thyroid	Kidney	Lung	GI-LLI	Bone	Liver
H-3	1.61E-01	1 61E-01	1.61E-01	1.61E-01	1.61E-01	0.00E+00	1 61E-01
Na-24	4 57E-01	4 57E-01	4 57E-01	4.57E-01	4.57E-01	4 57E-01	4 57E-01
Cr-51	5.58E+00	3 34E+00	1.23E+00	7.40E+00	1 40E+03	0 00E+00	0.00E+00
Mn-54	1.35E+03	0 00E+00	2.10E+03	0 00E+00	2 16E+04	0.00E+00	7.06E+03
Mn-56	3.15E+01	0.00E+00	2.26E+02	0.00E+00	5.67E+03	0.00E+00	1.78E+02
Fe-55	8.23E+03	0.00E+00	0.00E+00	1.97E+04	2 03E+04	5 11E+04	3.53E+04
Fe-59	7.27E+04	0 00E+00	0.00E+00	5.30E+04	6 32E+05	8.06E+04	1 90E+05
Co-57	2.36E+02	0 00E+00	0 00E+00	0.00E+00	3 59E+03	0.00E+00	1 42E+02
Co-58	1.35E+03	0.00E+00	0.00E+00	0 00E+00	1 22E+04	0 00E+00	6.03E+02
Co-60	3.82E+03	0.00E+00	0.00E+00	0.00E+00	3.25E+04	0.00E+00	1.73E+03
Ni-65	1.20E+01	0.00E+00	0.00E+00	0.00E+00	6 65E+02	2 02E+02	2 62E+01
Cu-64	1.01E+02	0 00E+00	5.40E+02	0.00E+00	1 83E+04	0.00E+00	2 14E+02
Zn-65	2.32E+05	0 00E+00	3 43E+05	0 00E+00	3 23E+05	1.61E+05	5.13E+05
Zn-69	4.56E+01	0 00E+00	4.26E+02	0.00E+00	9 85E+01	3.43E+02	6 56E+02
As-76	4.42E+01	0.00E+00	8.72E+01	0.00E+00	0.00E+00	0.00E+00	4.62E+01
Br-82	4.07E+00	0.00E+00	0 00E+00	0 00E+00	4.67E+00	0.00E+00	0 00E+00
Br-84	9.39E-02	0 00E+00	0.00E+00	0 00E+00	7 37E-07	0 00E+00	0 00E+00
Rb-86	2.91E+02	0 00E+00	0.00E+00	0 00E+00	1 23E+02	0.00E+00	6.24E+02
Rb-88	9.49E-01	0.00E+00	0 00E+00	0.00E+00	2 47E-11	0.00E+00	1.79E+00
Rb-89	8.34E-01	0.00E+00	0.00E+00	0.00E+00	6.89E-14	0.00E+00	1.19E+00
Sr-89	1.43E+02	0 00E+00	0.00E+00	0 00E+00	8 00E+02	4 99E+03	0.00E+00
Sr-90	2.83E+03	0 00E+00	0.00E+00	0.00E+00	3 55E+03	1 41E+05	0.00E+00
Sr-91	3.71E+00	0 00E+00	0.00E+00	0 00E+00	4 37E+02	9.18E+01	0 00E+00
Sr-92	1.51E+00	0.00E+00	0.00E+00	0 00E+00	6 90E+02	3.48E+01	0 00E+00
Y-90	1.63E-01	0.00E+00	0.00E+00	0.00E+00	6.42E+04	6.06E+00	0.00E+00
Y-91m	2.22E-03	0 00E+00	0.00E+00	0 00E+00	1 68E-01	5.73E-02	0.00E+00
Y-92	1.56E-02	0 00E+00	0.00E+00	0 00E+00	9 32E+03	5.32E-01	0.00E+00
Zr-95	3.46E+00	0 00E+00	8 02E+00	0.00E+00	1.62E+04	1.59E+01	5.11E+00
Zr-97	8.13E-02	0.00E+00	2 68E-01	0 00E+00	5 51E+04	8.81E-01	1 78E-01
Nb-95	1.34E+02	0.00E+00	2.46E+02	0.00E+00	1.51E+06	4.47E+02	2.49E+02
Mo-99	2.43E+01	0 00E+00	2.89E+02	0.00E+00	2 96E+02	0.00E+00	1 28E+02
Tc-101	1.88E-01	0.00E+00	3 46E-01	9.81E-03	5.77E-14	1.33E-02	1 92E-02
Ru-103	4.60E+01	0 00E+00	4.07E+02	0.00E+00	1 25E+04	1 07E+02	0 00E+00
Ru-105	3.51E+00	0 00E+00	1 15E+02	0.00E+00	5 44E+03	8.89E+00	0.00E+00
Ru-106	2.01E+02	0.00E+00	3.06E+03	0.00E+00	1.03E+05	1.59E+03	0.00E+00
Ag-110m	8.60E+02	0 00E+00	2 85E+03	0 00E+00	5 91E+05	1.56E+03	1.45E+03
Sn-113	3.53E+03	9.85E+02	0 00E+00	0 00E+00	0 00E+00	6 06E+04	1.66E+03
Sn-117m	8 76E+02	2.52E+02	0.00E+00	0.00E+00	0 00E+00	3 02E+03	3.41E+02
Sb-122	6.65E+00	3 09E-01	0.00E+00	1.18E+01	0 00E+00	2.19E+01	4 47E-01
Sb-124	1.09E+02	6.70E-01	0.00E+00	2.15E+02	7.84E+03	2.76E+02	5.22E+00
Sb-125	4 20E+01	1 79E-01	0 00E+00	1 36E+02	1 94E+03	1 77E+02	1.97E+00

LRW COMPOSITE DOSE FACTORS[1], A_{io},
FOR ADULTS AT A SALTWATER SITE
(mrem/hour per μCi/ml)
organ "o"

Nuclide	Tot Body	Thyroid	Kidney	Lung	GI-LLI	Bone	Liver
Te-129m	1 47E+02	3 20E+02	3.89E+03	0.00E+00	4.69E+03	9 31E+02	3 47E+02
Te-129	6 19E-01	1.95E+00	1.07E+01	0.00E+00	1.92E+00	2.54E+00	9.55E-01
Te-131m	5 71E+01	1.08E+02	6.94E+02	0 00E+00	6.80E+03	1 40E+02	6.85E+01
Te-131	5.03E-01	1.31E+00	6.99E+00	0.00E+00	2.26E-01	1.59E+00	6.66E-01
Te-132	1 24E+02	1.46E+02	1.27E+03	0.00E+00	6 24E+03	2 04E+02	1 32E+02
I-131	1.79E+02	1 02E+05	5 35E+02	0.00E+00	8.23E+01	2 18E+02	3 12E+02
I-132	9 96E+00	9.96E+02	4.54E+01	0 00E+00	5.35E+00	1.06E+01	2 85E+01
I-133	3.95E+01	1 90E+04	2 26E+02	0.00E+00	1 16E+02	7.45E+01	1.30E+02
I-134	5.40E+00	2.62E+02	2.40E+01	0.00E+00	1.32E-02	5.56E+00	1.51E+01
I-135	2 24E+01	4 01E+03	9.75E+01	0.00E+00	6 87E+01	2.32E+01	6.08E+01
Cs-134	1.33E+04	0.00E+00	5.27E+03	1.75E+03	2.85E+02	6.84E+03	1.63E+04
Cs-136	2 04E+03	0 00E+00	1 57E+03	2.16E+02	3.21E+02	7.16E+02	2 83E+03
Cs-137	7 85E+03	0 00E+00	4 07E+03	1.35E+03	2.32E+02	8 77E+03	1 20E+04
Cs-138	5.94E+00	0.00E+00	8.81E+00	8.70E-01	5.12E-05	6.07E+00	1.20E+01
Ba-139	2 30E-01	0 00E+00	5.23E-03	3 17E-03	1 39E+01	7.85E+00	5 59E-03
Ba-140	1 08E+02	0 00E+00	7.02E-01	1.18E+00	3.38E+03	1.64E+03	2.06E+00
Ba-141	1.29E-01	0 00E+00	2.68E-03	1 63E-03	1.80E-09	3 81E+00	2.88E-03
La-140	2.10E-01	0 00E+00	0.00E+00	0 00E+00	5 83E+04	1 57E+00	7.94E-01
La-142	9.13E-03	0.00E+00	0.00E+00	0.00E+00	2.68E+02	8.06E-02	3.67E-02
Ce-141	2.63E-01	0 00E+00	1.08E+00	0.00E+00	8 86E+03	3.43E+00	2 32E+00
Ce-143	4.94E-02	0 00E+00	1.97E-01	0.00E+00	1.67E+04	6.04E-01	4.46E+02
Ce-144	9 59E+00	0 00E+00	4.43E+01	0.00E+00	6 04E+04	1.79E+02	7.47E+01
Pr-144	9 64E-04	0.00E+00	4.44E-03	0.00E+00	2.73E-09	1 90E-02	7.87E-03
Nd-147	2.74E-01	0.00E+00	2.68E+00	0.00E+00	2.20E+04	3.96E+00	4.58E+00
W-187	2 68E+00	0 00E+00	0 00E+00	0.00E+00	2.51E+03	9 16E+00	7 66E+00
Np-239	1.91E-03	0.00E+00	1.08E-02	0.00E+00	7.11E+02	3.53E-02	3.47E-03

[1] Dose factors are based upon NUREG 0133 methodology.

TABLE 10.2
SUMMARY OF LAND USE CENSUS EVALUATION

Sector	Receptor Description	Distance (miles)	X/Q	D/Q	Comments
N	none				no receptors within 5 miles
NNE	residence	4 4	5.39E-8	9 24E-11	unknown use
	residence	3 3	8.30E-8	1.54E-10	cabin - limited use
NE	residence	4 9	4 10E-8	6 51E-11	full time occupancy
ENE	residence	4 4	4 35E-8	8.41E-11	full time occupancy
	residence	5 0	3.15E-8	5 63E-11	full time occupancy
E	residence	4 0	4 73E-8	1.26E-10	cabin - unknown use
	residence	3.7	5.75E-8	1.60E-10	part time occupancy
	residence + garden	4.5	3.98E-8	1 02E-10	full time occupancy
ESE	oat hay and sugar peas	3 3	1.91E-7	1.26E-9	field workers present only during the day - **critical receptor ground plane, inhalation, and vegetation ingestion dose assessed at this location**
SE	none				no receptors within 5 miles
SSE	none				over water
S	none				over water
SSW	none				over water
SW	none				over water
WSW	none				over water
W	none				over water
WNW	none				over water
NW	highest site boundary dispersion value	0 5	4.97E-6	1.97E-8	**Gas effluent dose rates. PRRLs and HASPs evaluated at this location.**
	residence	1.2	1 49E-6	6 22E-9	cabin - very limited use
	residence	3 6	2 06E-7	7.00E-10	full time occupancy
NNW	residence	1.5	5.87E-7	1 89E-9	full time occupancy (trailer) - **critical receptor ground plane and inhalation dose assessed at this location**

TABLE 10.3

GRW DOSE FACTORS FOR NOBLE GASES[1]

Radionuclide	Whole Body Dose Factor K_i (mrem/yr per $\mu Ci/m^3$)	Skin Dose Factor L_i (mrem/yr per $\mu Ci/m^3$)	Gamma Air Dose Factor M_i (mrad/yr per $\mu Ci/m^3$)	Beta Air Dose Factor N_i (mrad/yr per $\mu Ci/m^3$)
Kr-83m	7.56E-02	----	1.93E+01	2 88E+02
Kr-85m	1 17E+03	1.46E+03	1 23E+03	1.97E+03
Kr-85	1 61E+01	1 34E+03	1.72E+01	1 95E+03
Kr-87	5.92E+03	9.73E+03	6.17E+03	1.03E+04
Kr-88	1 47E+04	2.37E+03	1 52E+04	2 93E+03
Kr-89	1.66E+04	1.01E+04	1 73E+04	1 06E+04
Kr-90	1 56E+04	7 29E+03	1.63E+04	7 83E+03
Xe-131m	9 15E+01	4.76E+02	1.56E+02	1 11E+03
Xe-133m	2.51E+02	9.94E+02	3.27E+02	1.48E+03
Xe-133	2.94E+02	3.06E+02	3 53E+02	1.05E+03
Xe-135m	3 12E+03	7 11E+02	3 36E+03	7.39E+02
Xe-135	1 81E+03	1 86E+03	1.92E+03	2.46E+03
Xe-137	1 42E+03	1 22E+04	1 51E+03	1 27E+04
Xe-138	8.83E+03	4.13E+03	9.21E+03	4.75E+03
Ar-41	8.84E+03	2.69E+03	9.30E+03	3.28E+03

[1] From Table B-1 of Regulatory Guide 1.109 (Rev. 1, Oct. 1977)

TABLE 10.4
CHILD INHALATION PATHWAY DOSE FACTORS FOR WORST CASE ORGAN

Radionuclide	P_i^w
H-3	6 40E+02
CR-51	1.70E+04
MN-54	1.58E+06
FE-59	1 27E+06
CO-58	1.11E+06
CO-60	7.07E+06
ZN-65	9.95E+05
RB-86	1 98E+05
SR-89	2.16E+06
Y-90	2.68E+05
SR-90	3.85E+07
ZR-95	2 23E+06
NB-95	6 14E+05
RU-103	6 62E+05
RU-106	1.43E+07
AG-110M	5 48E+06
SB-124	3.24E+06
SB-125	2 32E+06
TE-129M	1.76E+06
I-131	1.62E+07
I-133	3.85E+06
CS-134	1 01E+06
CS-136	1.71E+05
CS-137	9 07E+05
BA-140	1.74E+06
CE-141	5 44E+05
CE-144	1.20E+07
ND-147	3.28E+05

TABLE 10.5

GROUND PLANE DOSE FACTORS

GRW DOSE PARAMETERS[1], $R_{i\,GP}$ FOR RADIOIODINES, RADIOACTIVE PARTICULATES, AND ANY RADIONUCLIDE OTHER THAN NOBLE GAS (IPT), GASEOUS EFFLUENTS (GRW), ANY AGE GROUP, GROUND PLANE PATHWAY

(mrem/yr per μCi/(sec m²))

Nuclide	Bone	Liver	T Body	Thyroid	Kidney	Lung	GI-LLI
H-3	0.00E+00	0.00E+00	0 00E+00	0.00E+00	0 00E+00	0 00E+00	0 00E+00
CR-51	4 65E+06	4 65E+06	4 65E+06	4.65E+06	4 65E+06	4.65E+06	4.65E+06
MN-54	1.38E+09	1.38E+09	1 38E+09	1.38E+09	1.38E+09	1 38E+09	1 38E+09
FE-59	2.73E+08	2.73E+08	2.73E+08	2.73E+08	2 73E+08	2.73E+08	2 73E+08
CO-58	3.80E+08	3.80E+08	3.80E+08	3.80E+08	3.80E+08	3.80E+08	3.80E+08
CO-60	2 15E+10	2.15E+10	2.15E+10	2.15E+10	2.15E+10	2.15E+10	2.15E+10
ZN-65	7.46E+08	7 46E+08	7 46E+08	7.46E+08	7.46E+08	7.46E+08	7.46E+08
RB-86	8.98E+06	8.98E+06	8.98E+06	8 98E+06	8.98E+06	8.98E+06	8 98E+06
SR-89	2.16E+04	2 16E+04	2 16E+04	2.16E+04	2 16E+04	2 16E+04	2.16E+04
Y-90	4.50E+03	4.50E+03	4.50E+03	4.50E+03	4.50E+03	4.50E+03	4.50E+03
SR-90	0.00E+00	0.00E+00	0 00E+00	0 00E+00	0.00E+00	0 00E+00	0 00E+00
ZR-95	2 45E+08	2 45E+08	2.45E+08	2.45E+08	2 45E+08	2.45E+08	2.45E+08
NB-95	1 37E+08	1.37E+08	1.37E+08	1.37E+08	1.37E+08	1.37E+08	1.37E+08
RU-103	1.08E+08	1 08E+08	1 08E+08	1.08E+08	1.08E+08	1 08E+08	1.08E+08
RU-106	4.20E+08	4.20E+08	4.20E+08	4.20E+08	4.20E+08	4.20E+08	4.20E+08
AG-110M	3.45E+09	3.45E+09	3 45E+09	3.45E+09	3.45E+09	3.45E+09	3 45E+09
SB-124	5.99E+08	5.99E+08	5 99E+08	5.99E+08	5.99E+08	5.99E+08	5 99E+08
SB-125	2.34E+09	2.34E+09	2 34E+09	2.34E+09	2.34E+09	2.34E+09	2 34E+09
TE-129M	1.98E+07	1.98E+07	1 98E+07	1 98E+07	1.98E+07	1.98E+07	1 98E+07
I-131	1.72E+07	1.72E+07	1.72E+07	1.72E+07	1.72E+07	1.72E+07	1.72E+07
I-133	2 45E+06	2.45E+06	2 45E+06	2.45E+06	2.45E+06	2.45E+06	2 45E+06
CS-134	6.90E+09	6.90E+09	6.90E+09	6.90E+09	6.90E+09	6.90E+09	6.90E+09
CS-136	1 51E+08	1.51E+08	1 51E+08	1.51E+08	1.51E+08	1.51E+08	1 51E+08
CS-137	1.03E+10	1.03E+10	1 03E+10	1.03E+10	1.03E+10	1 03E+10	1.03E+10
BA-140	2.05E+07	2.05E+07	2.05E+07	2.05E+07	2.05E+07	2.05E+07	2.05E+07
CE-141	1.37E+07	1.37E+07	1 37E+07	1 37E+07	1 37E+07	1 37E+07	1 37E+07
CE-144	6.96E+07	6 96E+07	6.96E+07	6 96E+07	6.96E+07	6 96E+07	6 96E+07
ND-147	8.39E+06	8.39E+06	8.39E+06	8.39E+06	8.39E+06	8.39E+06	8.39E+06

[1] Dose factors are based upon NUREG 0133 methodology.

TABLE 10.6

GRW DOSE PARAMETERS FOR RADIOIODINES, RADIOACTIVE PARTICULATES, AND ANY RADIONUCLIDE OTHER THAN NOBLE GAS (IPT), GASEOUS EFFLUENTS (GRW)

TABLE 10.6.1

GRW DOSE PARAMETERS[1] FOR RADIOIODINES, RADIOACTIVE PARTICULATES, AND ANY RADIONUCLIDE OTHER THAN NOBLE GAS (IPT), GASEOUS EFFLUENTS (GRW), INFANT AGE GROUP, INHALATION PATHWAY ORGAN "O" (mrem/yr per μCi/m^3) $R_{i,Inhal}$

Nuclide	Bone	Liver	T Body	Thyroid	Kidney	Lung	GI-LLI
H-3	0.00E+00	3 68E+02	3.68E+02	3 68E+02	3.68E+02	3.68E+02	3.68E+02
CR-51	0 00E+00	0 00E+00	8.95E+01	5 75E+01	1 32E+01	1.28E+04	3 57E+02
MN-54	0.00E+00	2.53E+04	4.98E+03	0 00E+00	4 98E+03	1.00E+06	7.06E+03
FE-59	1.36E+04	2 35E+04	9.48E+03	0.00E+00	0 00E+00	1.02E+06	2 48E+04
CO-58	0.00E+00	1.22E+03	1.82E+03	0.00E+00	0.00E+00	7.77E+05	1.11E+04
CO-60	0.00E+00	8.02E+03	1.18E+04	0.00E+00	0 00E+00	4.51E+06	3 19E+04
ZN-65	1.93E+04	6.26E+04	3.11E+04	0.00E+00	3 25E+04	6.47E+05	5.14E+04
RB-86	0.00E+00	1 90E+05	8.82E+04	0 00E+00	0 00E+00	0.00E+00	3 04E+03
SR-89	3 98E+05	0 00E+00	1.14E+04	0 00E+00	0.00E+00	2.03E+06	6 40E+04
Y-90	3.29E+03	0.00E+00	8.82E+01	0.00E+00	0.00E+00	2.69E+05	1.04E+05
SR-90	1.55E+07	0 00E+00	3 12E+05	0 00E+00	0 00E+00	1.12E+07	1 31E+05
ZR-95	1.15E+05	2.79E+04	2.03E+04	0 00E+00	3 11E+04	1.75E+06	2 17E+04
NB-95	1.57E+04	6 43E+03	3.78E+03	0 00E+00	4 72E+03	4.79E+05	1 27E+04
RU-103	2.02E+03	0 00E+00	6 79E+02	0 00E+00	4 24E+03	5.52E+05	1 61E+04
RU-106	8.68E+04	0.00E+00	1.09E+04	0.00E+00	1.07E+05	1.16E+07	1.64E+05
AG-110M	9.98E+03	7.22E+03	5.00E+03	0 00E+00	1.09E+04	3.67E+06	3.30E+04
SB-124	3.79E+04	5.56E+02	1.20E+04	1 01E+02	0 00E+00	2.65E+06	5 91E+04
SB-125	5.17E+04	4 77E+02	1 09E+04	6 23E+01	0 00E+00	1.64E+06	1 47E+04
TE-129M	1.41E+04	6.09E+03	2.23E+03	5.47E+03	3.18E+04	1.68E+06	6 90E+04
I-131	3.79E+04	4.44E+04	1.96E+04	1.48E+07	5.18E+04	0.00E+00	1.06E+03
I-133	1.32E+04	1 92E+04	5.60E+03	3.56E+06	2 24E+04	0.00E+00	2 16E+03
CS-134	3.96E+05	7.03E+05	7.45E+04	0.00E+00	1.90E+05	7.97E+04	1 33E+03
CS-136	4.83E+04	1.35E+05	5.29E+04	0.00E+00	5 64E+04	1.18E+04	1 43E+03
CS-137	5.49E+05	6 12E+05	4.55E+04	0.00E+00	1 72E+05	7.13E+04	1 33E+03
BA-140	5.60E+04	5.60E+01	2.90E+03	0.00E+00	1.34E+01	1.60E+06	3.84E+04
CE-141	2.77E+04	1.67E+04	1.99E+03	0 00E+00	5 25E+03	5.17E+05	2.16E+04
CE-144	3 19E+06	1.21E+06	1.76E+05	0 00E+00	5 38E+05	9 84E+06	1.48E+05
ND-147	7.94E+03	8.13E+03	5.00E+02	0.00E+00	3.15E+03	3.22E+05	3.12E+04

[1] Dose factors are based upon NUREG 0133 methodology.

TABLE 10.6.2

GRW DOSE PARAMETERS[1] FOR RADIOIODINES, RADIOACTIVE PARTICULATES, AND ANY RADIONUCLIDE OTHER THAN NOBLE GAS (IPT), GASEOUS EFFLUENTS (GRW), CHILD AGE GROUP, INHALATION PATHWAY ORGAN "O" (mrem/yr per μCi/m³) $R_{i,Inhal}$

Nuclide	Bone	Liver	T Body	Thyroid	Kidney	Lung	GI-LLI
H-3	0.00E+00	6.40E+02	6 40E+02	6.40E+02	6.40E+02	6.40E+02	6.40E+02
CR-51	0 00E+00	0.00E+00	1.54E+02	8.55E+01	2 43E+01	1.70E+04	1.08E+03
MN-54	0.00E+00	4.29E+04	9.51E+03	0.00E+00	1 00E+04	1 58E+06	2.29E+04
FE-59	2 07E+04	3 34E+04	1.67E+04	0.00E+00	0 00E+00	1.27E+06	7 07E+04
CO-58	0.00E+00	1.77E+03	3.16E+03	0.00E+00	0.00E+00	1.11E+06	3.44E+04
CO-60	0 00E+00	1.31E+04	2.26E+04	0.00E+00	0.00E+00	7.07E+06	9.62E+04
ZN-65	4.26E+04	1 13E+05	7.03E+04	0 00E+00	7.14E+04	9 95E+05	1.63E+04
RB-86	0.00E+00	1.98E+05	1.14E+05	0 00E+00	0 00E+00	0 00E+00	7.99E+03
SR-89	5.99E+05	0 00E+00	1.72E+04	0 00E+00	0 00E+00	2.16E+06	1 67E+05
Y-90	4.11E+03	0.00E+00	1.11E+02	0.00E+00	0.00E+00	2.62E+05	2.68E+05
SR-90	3.85E+07	0 00E+00	7 66E+05	0.00E+00	0 00E+00	1 48E+07	3.43E+05
ZR-95	1.90E+05	4 18E+04	3.70E+04	0.00E+00	5.96E+04	2.23E+06	6.11E+04
NB-95	2.35E+04	9.18E+03	6.55E+03	0 00E+00	8.62E+03	6.14E+05	3.70E+04
RU-103	2 79E+03	0 00E+00	1.07E+03	0.00E+00	7 03E+03	6 62E+05	4.48E+04
RU-106	1.36E+05	0.00E+00	1.69E+04	0.00E+00	1.84E+05	1.43E+07	4.29E+05
AG-110M	1 69E+04	1 14E+04	9 14E+03	0.00E+00	2.12E+04	5 48E+06	1.00E+05
SB-124	5.74E+04	7.40E+02	2.00E+04	1 26E+02	0.00E+00	3.24E+06	1.64E+05
SB-125	9 84E+04	7 59E+02	2.07E+04	9.10E+01	0.00E+00	2.32E+06	4.03E+04
TE-129M	1 92E+04	6 85E+03	3.04E+03	6.33E+03	5.03E+04	1.76E+06	1 82E+05
I-131	4.81E+04	4.81E+04	2.73E+04	1.62E+07	7.88E+04	0.00E+00	2.84E+03
I-133	1.66E+04	2 03E+04	7.70E+03	3.85E+06	3.38E+04	0.00E+00	5 48E+03
CS-134	6 51E+05	1.01E+06	2.25E+05	0.00E+00	3.30E+05	1.21E+05	3.85E+03
CS-136	6 51E+04	1 71E+05	1.16E+05	0 00E+00	9.55E+04	1.45E+04	4.18E+03
CS-137	9 07E+05	8.25E+05	1.28E+05	0.00E+00	2.82E+05	1.04E+05	3.62E+03
BA-140	7.40E+04	6.48E+01	4.33E+03	0.00E+00	2.11E+01	1.74E+06	1.02E+05
CE-141	3.92E+04	1 95E+04	2.90E+03	0.00E+00	8.55E+03	5 44E+05	5.66E+04
CE-144	6 77E+06	2 12E+06	3.61E+05	0 00E+00	1.17E+06	1 20E+07	3.89E+05
ND-147	1.08E+04	8.73E+03	6.81E+02	0.00E+00	4.81E+03	3.28E+05	8.21E+04

[1] Dose factors are based upon NUREG 0133 methodology.

TABLE 10.6.3

GRW DOSE PARAMETERS[1] FOR RADIOIODINES, RADIOACTIVE PARTICULATES, AND ANY RADIONUCLIDE OTHER THAN NOBLE GAS (IPT), GASEOUS EFFLUENTS (GRW), TEEN AGE GROUP, INHALATION PATHWAY ORGAN "O" (mrem/yr per μCi/m³) $R_{i,Inhal}$

Nuclide	Bone	Liver	T Body	Thyroid	Kidney	Lung	GI-LLI
H-3	0 00E+00	7.25E+02	7.25E+02	7.25E+02	7 25E+02	7.25E+02	7 25E+02
CR-51	0.00E+00	0 00E+00	1.35E+02	7.50E+01	3.07E+01	2.10E+04	3 00E+03
MN-54	0.00E+00	5 11E+04	8.40E+03	0 00E+00	1 27E+04	1.98E+06	6 68E+04
FE-59	1.59E+04	3.70E+04	1.43E+04	0 00E+00	0 00E+00	1.53E+06	1 78E+05
CO-58	0.00E+00	2.07E+03	2.78E+03	0.00E+00	0.00E+00	1.34E+06	9.52E+04
CO-60	0 00E+00	1 51E+04	1.98E+04	0 00E+00	0 00E+00	8.72E+06	2.59E+05
ZN-65	3.86E+04	1.34E+05	6.24E+04	0 00E+00	8 64E+04	1.24E+06	4.66E+04
RB-86	0 00E+00	1 90E+05	8.40E+04	0.00E+00	0 00E+00	0 00E+00	1 77E+04
SR-89	4 34E+05	0 00E+00	1 25E+04	0.00E+00	0.00E+00	2.42E+06	3.71E+05
Y-90	2.98E+03	0.00E+00	8.00E+01	0.00E+00	0.00E+00	2.93E+05	5.59E+05
SR-90	3.31E+07	0 00E+00	6 66E+05	0.00E+00	0.00E+00	1 65E+07	7 65E+05
ZR-95	1 46E+05	4.58E+04	3.15E+04	0.00E+00	6 74E+04	2 69E+06	1 49E+05
NB-95	1 86E+04	1 03E+04	5 66E+03	0.00E+00	1 00E+04	7.51E+05	9 68E+04
RU-103	2 10E+03	0 00E+00	8.96E+02	0.00E+00	7.43E+03	7.83E+05	1.09E+05
RU-106	9.84E+04	0.00E+00	1.24E+04	0.00E+00	1.90E+05	1.61E+07	9.60E+05
AG-110M	1 38E+04	1 31E+04	7.99E+03	0.00E+00	2.50E+04	6.75E+06	2.73E+05
SB-124	4 30E+04	7 94E+02	1.68E+04	9.76E+01	0 00E+00	3.85E+06	3.98E+05
SB-125	7 38E+04	8 08E+02	1.72E+04	7.04E+01	0.00E+00	2 74E+06	9 92E+04
TE-129M	1 39E+04	6 58E+03	2.25E+03	4.58E+03	5 19E+04	1.98E+06	4.05E+05
I-131	3.54E+04	4.91E+04	2.64E+04	1.46E+07	8.40E+04	0.00E+00	6.49E+03
I-133	1.22E+04	2.05E+04	6.22E+03	2.92E+06	3 59E+04	0 00E+00	1.03E+04
CS-134	5 02E+05	1 13E+06	5.49E+05	0 00E+00	3 75E+05	1.46E+05	9.76E+03
CS-136	5 15E+04	1.94E+05	1.37E+05	0 00E+00	1 10E+05	1.78E+04	1.09E+04
CS-137	6.70E+05	8.48E+05	3.11E+05	0.00E+00	3.04E+05	1.21E+05	8.48E+03
BA-140	5.47E+04	6.70E+01	3.52E+03	0.00E+00	2.28E+01	2.03E+06	2.29E+05
CE-141	2 84E+04	1 90E+04	2.17E+03	0.00E+00	8 88E+03	6.14E+05	1.26E+05
CE-144	4.89E+06	2 02E+06	2.62E+05	0.00E+00	1.21E+06	1.34E+07	8.64E+05
ND-147	7.86E+03	8.56E+03	5.13E+02	0.00E+00	5.02E+03	3.72E+05	1.82E+05

[1] Dose factors are based upon NUREG 0133 methodology.

TABLE 10.6.4

GRW DOSE PARAMETERS[1] FOR RADIOIODINES, RADIOACTIVE PARTICULATES, AND ANY RADIONUCLIDE OTHER THAN NOBLE GAS (IPT), GASEOUS EFFLUENTS (GRW), ADULT AGE GROUP, INHALATION PATHWAY ORGAN "O" (mrem/yr per μCi/m^3) $R_{i,Inhal}$

Nuclide	Bone	Liver	T Body	Thyroid	Kidney	Lung	GI-LLI
H-3	0.00E+00	7 18E+02	7.18E+02	7 18E+02	7 18E+02	7.18E+02	7.18E+02
CR-51	0 00E+00	0.00E+00	1.00E+02	5.95E+01	2 28E+01	1.44E+04	3.32E+03
MN-54	0.00E+00	3 96E+04	6 30E+03	0 00E+00	9.84E+03	1 40E+06	7.74E+04
FE-59	1 18E+04	2.78E+04	1 06E+04	0.00E+00	0 00E+00	1.02E+06	1 88E+05
CO-58	0.00E+00	1.58E+03	2.07E+03	0.00E+00	0.00E+00	9.28E+05	1.06E+05
CO-60	0.00E+00	1 15E+04	1.48E+04	0 00E+00	0.00E+00	5.97E+06	2 85E+05
ZN-65	3.24E+04	1.03E+05	4 66E+04	0.00E+00	6.90E+04	8 64E+05	5 34E+04
RB-86	0 00E+00	1 35E+05	5.90E+04	0.00E+00	0 00E+00	0.00E+00	1 66E+04
SR-89	3.04E+05	0 00E+00	8 72E+03	0.00E+00	0 00E+00	1 40E+06	3.50E+05
Y-90	2.09E+03	0.00E+00	5.61E+01	0.00E+00	0.00E+00	1.70E+05	5.06E+05
SR-90	2.87E+07	0 00E+00	5.77E+05	0.00E+00	0 00E+00	9.60E+06	7 22E+05
ZR-95	1.07E+05	3 44E+04	2.33E+04	0.00E+00	5 42E+04	1 77E+06	1 50E+05
NB-95	1 41E+04	7 82E+03	4.21E+03	0 00E+00	7.74E+03	5 05E+05	1 04E+05
RU-103	1 53E+03	0.00E+00	6 58E+02	0.00E+00	5 83E+03	5.05E+05	1 10E+05
RU-106	6.91E+04	0.00E+00	8.72E+03	0.00E+00	1.34E+05	9.36E+06	9.12E+05
AG-110M	1 08E+04	1 00E+04	5 94E+03	0 00E+00	1.97E+04	4.63E+06	3 02E+05
SB-124	3 12E+04	5 89E+02	1.24E+04	7.55E+01	0.00E+00	2 48E+06	4.06E+05
SB-125	5 34E+04	5 95E+02	1.26E+04	5 40E+01	0.00E+00	1 74E+06	1 01E+05
TE-129M	9 76E+03	4 67E+03	1 58E+03	3.44E+03	3.66E+04	1.16E+06	3.83E+05
I-131	2.52E+04	3.58E+04	2.05E+04	1.19E+07	6.13E+04	0.00E+00	6.28E+03
I-133	8 64E+03	1 48E+04	4.52E+03	2 15E+06	2.58E+04	0.00E+00	8 88E+03
CS-134	3.73E+05	8 48E+05	7.28E+05	0 00E+00	2.87E+05	9.76E+04	1 04E+04
CS-136	3 90E+04	1 46E+05	1.10E+05	0 00E+00	8.56E+04	1.20E+04	1 17E+04
CS-137	4 78E+05	6.21E+05	4.28E+05	0 00E+00	2.22E+05	7 52E+04	8 40E+03
BA-140	3.90E+04	4.90E+01	2.57E+03	0.00E+00	1.67E+01	1.27E+06	2.18E+05
CE-141	1 99E+04	1.35E+04	1.53E+03	0 00E+00	6.26E+03	3.62E+05	1.20E+05
CE-144	3.43E+06	1.43E+06	1.84E+05	0 00E+00	8.48E+05	7.78E+06	8.16E+05
ND-147	5.27E+03	6.10E+03	3.65E+02	0.00E+00	3.56E+03	2.21E+05	1.73E+05

[1] Dose factors are based upon NUREG 0133 methodology

TABLE 10.6.5

GRW DOSE PARAMETERS[1] FOR RADIOIODINES, RADIOACTIVE PARTICULATES, AND ANY RADIONUCLIDE OTHER THAN NOBLE GAS (IPT), GASEOUS EFFLUENTS (GRW), CHILD AGE GROUP, VEGETATION PATHWAY ORGAN "O" (mrem/yr per μCi/(sec m²)) $R_{i,Vegi}$

Nuclide	Bone	Liver	T Body	Thyroid	Kidney	Lung	GI-LLI
H-3[2]	0.00E+00	2.29E+03	2.29E+03	2.29E+03	2.29E+03	2.29E+03	2 29E+03
CR-51	0 00E+00	0 00E+00	1.17E+05	6 49E+04	1.77E+04	1.18E+05	6.20E+06
MN-54	0 00E+00	6 65E+08	1.77E+08	0.00E+00	1 86E+08	0 00E+00	5.58E+08
FE-59	3.97E+08	6 42E+08	3.20E+08	0 00E+00	0 00E+00	1.86E+08	6 69E+08
CO-58	0.00E+00	6.45E+07	1.97E+08	0.00E+00	0.00E+00	0.00E+00	3.76E+08
CO-60	0.00E+00	3 78E+08	1.12E+09	0 00E+00	0 00E+00	0.00E+00	2 10E+09
ZN-65	8.12E+08	2 16E+09	1.35E+09	0.00E+00	1.36E+09	0 00E+00	3.80E+08
RB-86	0.00E+00	4 54E+08	2 79E+08	0 00E+00	0 00E+00	0.00E+00	2 92E+07
SR-89	3.59E+10	0 00E+00	1.03E+09	0.00E+00	0 00E+00	0 00E+00	1.39E+09
Y-90	2.31E+04	0.00E+00	6.18E+02	0.00E+00	0.00E+00	0.00E+00	6.57E+07
SR-90	1 87E+12	0.00E+00	3.77E+10	0.00E+00	0 00E+00	0.00E+00	1.67E+10
ZR-95	3 86E+06	8 50E+05	7.56E+05	0 00E+00	1 22E+06	0.00E+00	8 86E+08
NB-95	4.12E+05	1 61E+05	1.15E+05	0.00E+00	1 51E+05	0.00E+00	2 97E+08
RU-103	1 53E+07	0 00E+00	5.89E+06	0.00E+00	3 86E+07	0.00E+00	3 96E+08
RU-106	7.45E+08	0.00E+00	9.30E+07	0.00E+00	1.01E+09	0.00E+00	1.16E+10
AG-110M	3.21E+07	2 17E+07	1.74E+07	0 00E+00	4 04E+07	0 00E+00	2.58E+09
SB-124	3.52E+08	4 57E+06	1 23E+08	7.78E+05	0 00E+00	1 96E+08	2 20E+09
SB-125	4.99E+08	3 85E+06	1 05E+08	4 62E+05	0 00E+00	2.78E+08	1.19E+09
TE-129M	8.40E+08	2.35E+08	1 30E+08	2.71E+08	2 47E+09	0 00E+00	1 02E+09
I-131	1.43E+08	1.44E+08	8.17E+07	4.75E+10	2.36E+08	0.00E+00	1.28E+07
I-133	3 52E+06	4.36E+06	1 65E+06	8 09E+08	7 26E+06	0.00E+00	1.76E+06
CS-134	1.60E+10	2 63E+10	5.55E+09	0.00E+00	8 16E+09	2 93E+09	1 42E+08
CS-136	8.18E+07	2 25E+08	1.46E+08	0.00E+00	1 20E+08	1.79E+07	7 90E+06
CS-137	2.39E+10	2.29E+10	3.38E+09	0 00E+00	7 46E+09	2.68E+09	1 43E+08
BA-140	2.77E+08	2.43E+05	1.62E+07	0.00E+00	7.90E+04	1.45E+05	1.40E+08
CE-141	6.55E+05	3.27E+05	4.85E+04	0 00E+00	1.43E+05	0 00E+00	4.08E+08
CE-144	1.27E+08	3 98E+07	6.78E+06	0.00E+00	2 21E+07	0.00E+00	1 04E+10
ND-147	7.27E+04	5.89E+04	4.56E+03	0.00E+00	3.23E+04	0.00E+00	9.33E+07

[1] Dose factors are based upon NUREG 0133 methodology.

[2] For Tritium the units of the dose parameters are mrem/yr per μCi/m³ for all pathways, and they must be multiplied by X/Q

TABLE 10.6.6

GRW DOSE PARAMETERS[1] FOR RADIOIODINES, RADIOACTIVE PARTICULATES, AND ANY RADIONUCLIDE OTHER THAN NOBLE GAS (IPT), GASEOUS EFFLUENTS (GRW), TEEN AGE GROUP, VEGETATION PATHWAY ORGAN "O" (mrem/yr per μCi/(sec m²)) $R_{i,Vegi}$

Nuclide	Bone	Liver	T Body	Thyroid	Kidney	Lung	GI-LLI
H-3[2]	0.00E+00	1 47E+03	1.47E+03	1.47E+03	1.47E+03	1.47E+03	1 47E+03
CR-51	0 00E+00	0.00E+00	6 16E+04	3 42E+04	1.35E+04	8.79E+04	1.03E+07
MN-54	0.00E+00	4 54E+08	9 01E+07	0.00E+00	1.36E+08	0.00E+00	9 32E+08
FE-59	1.79E+08	4 18E+08	1.61E+08	0 00E+00	0.00E+00	1.32E+08	9 89E+08
CO-58	0.00E+00	4.37E+07	1.01E+08	0.00E+00	0.00E+00	0.00E+00	6.02E+08
CO-60	0.00E+00	2.49E+08	5.60E+08	0 00E+00	0.00E+00	0.00E+00	3.24E+09
ZN-65	4 24E+08	1 47E+09	6.86E+08	0 00E+00	9.41E+08	0 00E+00	6 23E+08
RB-86	0 00E+00	2 75E+08	1 29E+08	0.00E+00	0 00E+00	0 00E+00	4.06E+07
SR-89	1.51E+10	0.00E+00	4.33E+08	0 00E+00	0.00E+00	0.00E+00	1 80E+09
Y-90	1.24E+04	0.00E+00	3.35E+02	0.00E+00	0.00E+00	0.00E+00	1.02E+08
SR-90	9.22E+11	0 00E+00	1.84E+10	0 00E+00	0 00E+00	0 00E+00	2 11E+10
ZR-95	1 72E+06	5 44E+05	3 74E+05	0.00E+00	7.99E+05	0.00E+00	1 26E+09
NB-95	1 93E+05	1 07E+05	5.90E+04	0.00E+00	1 04E+05	0.00E+00	4.58E+08
RU-103	6.82E+06	0 00E+00	2.91E+06	0 00E+00	2.40E+07	0 00E+00	5 69E+08
RU-106	3.09E+08	0.00E+00	3.90E+07	0.00E+00	5.97E+08	0.00E+00	1.48E+10
AG-110M	1.52E+07	1 44E+07	8 73E+06	0 00E+00	2 74E+07	0.00E+00	4.03E+09
SB-124	1.55E+08	2 85E+06	6.03E+07	3.51E+05	0.00E+00	1 35E+08	3 11E+09
SB-125	2.14E+08	2.34E+06	5 01E+07	2 05E+05	0.00E+00	1 88E+08	1 67E+09
TE-129M	3.61E+08	1 34E+08	5.72E+07	1.17E+08	1.51E+09	0 00E+00	1 36E+09
I-131	7.68E+07	1.08E+08	5.78E+07	3.14E+10	1.85E+08	0.00E+00	2.13E+07
I-133	1.93E+06	3 28E+06	1.00E+06	4.58E+08	5.75E+06	0.00E+00	2 48E+06
CS-134	7.10E+09	1 67E+10	7.75E+09	0.00E+00	5.31E+09	2.03E+09	2 08E+08
CS-136	4.35E+07	1 71E+08	1.15E+08	0 00E+00	9.31E+07	1 47E+07	1 38E+07
CS-137	1.01E+10	1 35E+10	4.69E+09	0.00E+00	4.59E+09	1.78E+09	1 92E+08
BA-140	1.38E+08	1.69E+05	8.90E+06	0.00E+00	5.74E+04	1.14E+05	2.13E+08
CE-141	2.83E+05	1 89E+05	2.17E+04	0 00E+00	8 89E+04	0 00E+00	5.40E+08
CE-144	5.27E+07	2.18E+07	2.83E+06	0 00E+00	1.30E+07	0.00E+00	1 33E+10
ND-147	3.67E+04	4.00E+04	2.39E+03	0.00E+00	2.35E+04	0.00E+00	1.44E+08

[1] Dose factors are based upon NUREG 0133 methodology

[2] For Tritium the units of the dose parameters are mrem/yr per μCi/m³ for all pathways, and they must be multiplied by X/Q

TABLE 10.6.7

GRW DOSE PARAMETERS[1] FOR RADIOIODINES, RADIOACTIVE PARTICULATES, AND ANY RADIONUCLIDE OTHER THAN NOBLE GAS (IPT), GASEOUS EFFLUENTS (GRW), ADULT AGE GROUP, VEGETATION PATHWAY ORGAN "O"(mrem/yr per μCi/(sec m²)) $R_{i,Vegi}$

Nuclide	Bone	Liver	T Body	Thyroid	Kidney	Lung	GI-LLI
H-3[2]	0.00E+00	1 29E+03	1.29E+03	1.29E+03	1.29E+03	1.29E+03	1 29E+03
CR-51	0.00E+00	0 00E+00	4.64E+04	2.77E+04	1 02E+04	6.15E+04	1 17E+07
MN-54	0.00E+00	3.13E+08	5.97E+07	0 00E+00	9.31E+07	0 00E+00	9 58E+08
FE-59	1.26E+08	2 96E+08	1 13E+08	0.00E+00	0.00E+00	8 27E+07	9.87E+08
CO-58	0.00E+00	3.08E+07	6.90E+07	0.00E+00	0.00E+00	0.00E+00	6.24E+08
CO-60	0.00E+00	1 67E+08	3 69E+08	0 00E+00	0.00E+00	0 00E+00	3 14E+09
ZN-65	3.17E+08	1 01E+09	4.56E+08	0.00E+00	6.75E+08	0 00E+00	6.36E+08
RB-86	0.00E+00	2 20E+08	1.03E+08	0 00E+00	0.00E+00	0 00E+00	4.34E+07
SR-89	9.95E+09	0 00E+00	2.86E+08	0 00E+00	0 00E+00	0.00E+00	1.60E+09
Y-90	1.33E+04	0.00E+00	3.57E+02	0.00E+00	0.00E+00	0.00E+00	1.41E+08
SR-90	6.95E+11	0 00E+00	1.40E+10	0 00E+00	0 00E+00	0 00E+00	1 75E+10
ZR-95	1.18E+06	3 77E+05	2 55E+05	0 00E+00	5.92E+05	0.00E+00	1.20E+09
NB-95	1.43E+05	7 95E+04	4.27E+04	0 00E+00	7 86E+04	0 00E+00	4.83E+08
RU-103	4.77E+06	0 00E+00	2.05E+06	0 00E+00	1.82E+07	0 00E+00	5 57E+08
RU-106	1.93E+08	0.00E+00	2.44E+07	0.00E+00	3.72E+08	0.00E+00	1.25E+10
AG-110M	1.05E+07	9 75E+06	5.79E+06	0.00E+00	1.92E+07	0.00E+00	3.98E+09
SB-124	1 04E+08	1 96E+06	4.11E+07	2 52E+05	0 00E+00	8.08E+07	2.95E+09
SB-125	1 37E+08	1 53E+06	3.25E+07	1 39E+05	0.00E+00	1 05E+08	1.50E+09
TE-129M	2 51E+08	9 37E+07	3.97E+07	8.62E+07	1 05E+09	0.00E+00	1.26E+09
I-131	8.07E+07	1.15E+08	6.62E+07	3.78E+10	1.98E+08	0.00E+00	3.05E+07
I-133	2.08E+06	3 62E+06	1.10E+06	5 32E+08	6.31E+06	0.00E+00	3 25E+06
CS-134	4 67E+09	1.11E+10	9.08E+09	0 00E+00	3.59E+09	1 19E+09	1.94E+08
CS-136	4.25E+07	1.68E+08	1.21E+08	0.00E+00	9.33E+07	1 28E+07	1 90E+07
CS-137	6 36E+09	8 70E+09	5.70E+09	0.00E+00	2.95E+09	9.81E+08	1 68E+08
BA-140	1.29E+08	1.61E+05	8.42E+06	0.00E+00	5.49E+04	9.24E+04	2.65E+08
CE-141	1.97E+05	1.33E+05	1.51E+04	0 00E+00	6.19E+04	0.00E+00	5.09E+08
CE-144	3.29E+07	1 38E+07	1.77E+06	0 00E+00	8.16E+06	0.00E+00	1.11E+10
ND-147	3.37E+04	3.90E+04	2.33E+03	0.00E+00	2.28E+04	0.00E+00	1.87E+08

[1] Dose factors are based upon NUREG 0133 methodology.

[2] For Tritium the units of the dose parameters are mrem/yr per μCi/m³ for all pathways, and they must be multiplied by X/Q.

DIABLO CANYON POWER PLANT
CAP A-8
ATTACHMENT 11.1

1 AND 2

TITLE. Liquid Discharges (LRW) Monitored for Radioactivity

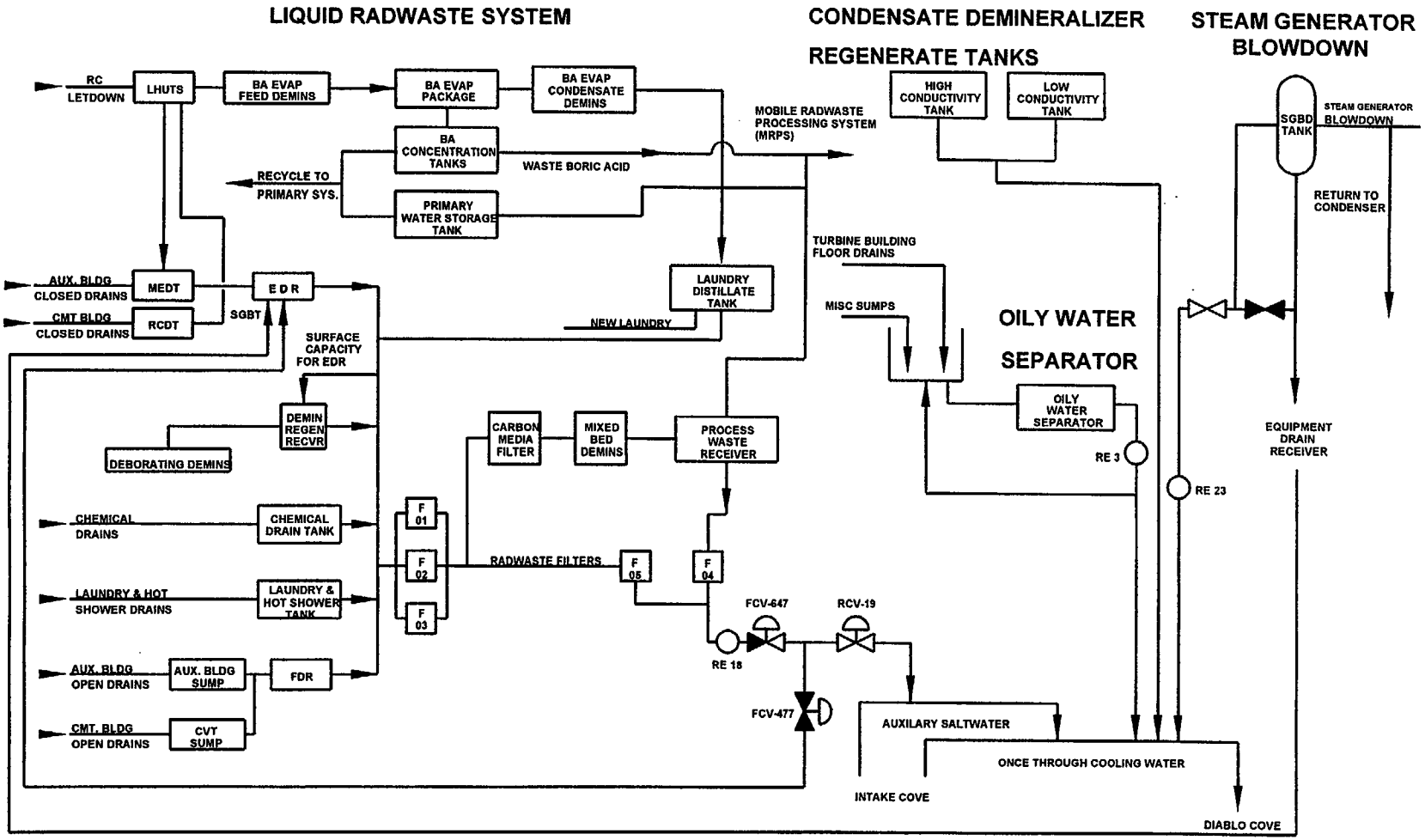

00692302

DIABLO CANYON POWER PLANT
CAP A-8
ATTACHMENT 11.2

1 AND 2

TITLE. Gaseous Releases (GRW) Monitored for Radioactivity

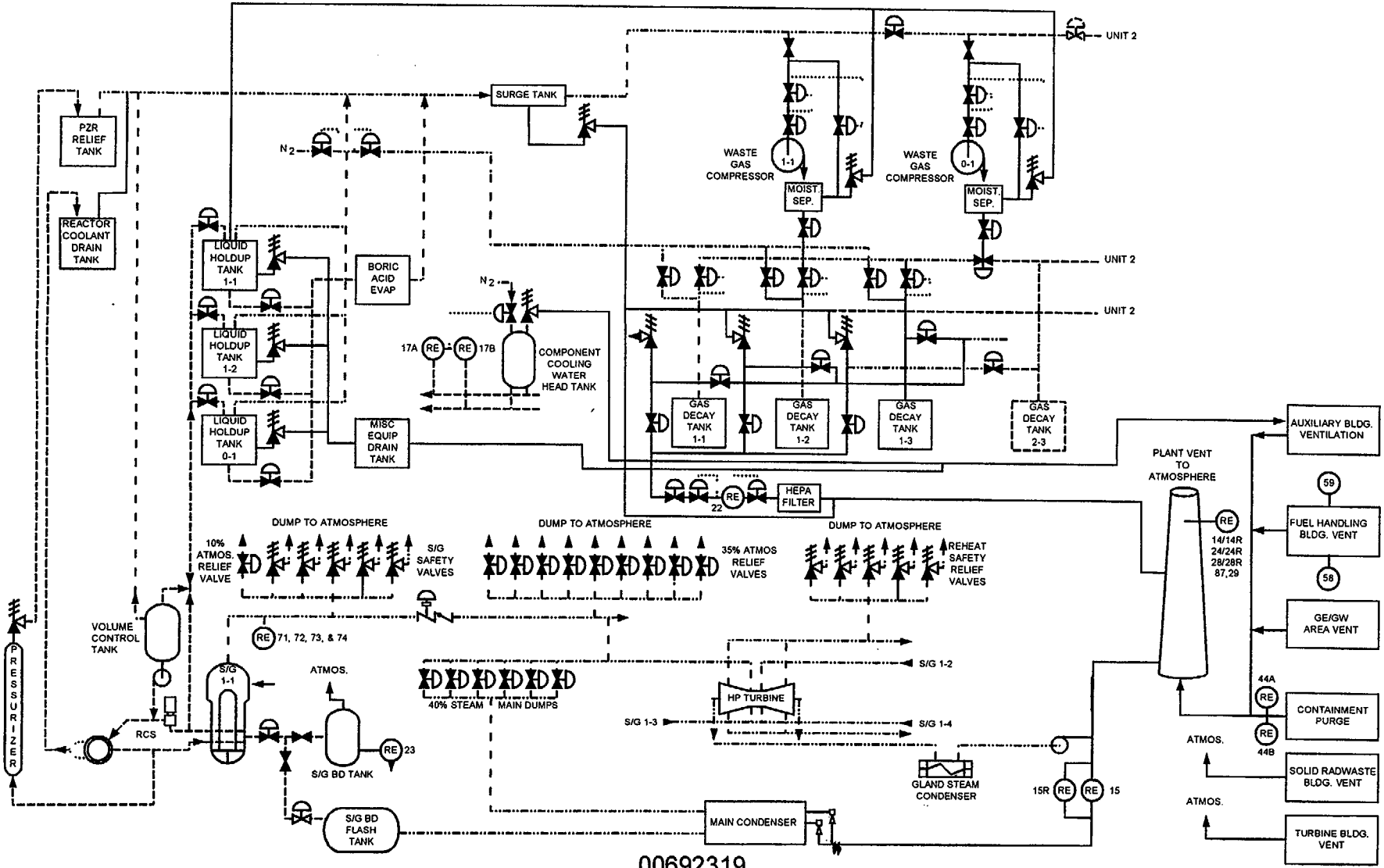

Attachment 6

2000 Land Use Census

2000 Land Use Census

Diablo Canyon Power Plant (DCPP) radiation protection personnel conducted a land use census in the vicinity of DCPP for 2000. The land use census is based on NRC Regulatory Guide 4.8, "Environmental Technical Specifications for Nuclear Power Plants," and is required by DCPP Program Directive CY2, "Radiological Monitoring and Controls Program " The census is conducted at least once per year during the growing season for the Diablo Canyon environs.

The land use census identifies the nearest milk animal and garden greater than 50 square meters (500 square feet), producing broadleaf vegetation, in each of the landward meteorological sectors within a distance of 8 kilometers (5 miles) of the plant. DCPP IDAP RP1.ID11, "Environmental Radiological Monitoring Program," requires that the nearest residence be identified in each of the landward sectors within a distance of 5 miles

The land use census was performed by directly contacting individual landowners or tenants, or by aerial surveys The landowners or tenants were contacted between October 17 and December 23, 2000. The aerial survey was performed on October 17, 2000.

The census identified one household garden in the east sector at 4.5 miles, greater than 50 square meters (500 square feet) that produces broadleaf vegetation No milk animals were identified within the first 5 miles in any sector. Much of the area surrounding the plant site is used for cattle grazing. Goats were used for weed abatement for approximately 6 months within the area surrounding the plant site. A farm is located on the coastal plateau in the east-southeast sector, along the site access road. The farm starts at approximately 3.3 miles and extends to 4.5 miles from the plant but produces only legumes and cereal grass (grains).

A total of 13 residences were identified within the 5-mile radius of the plant that were confirmed to be, or appeared to be, occupied during the year 2000. The nearest residence is 1.2 miles northwest of the plant. Table 1 summarizes the results of the land use census and Figure 1 shows the locations of the farm and residences in the vicinity of DCPP.

Table 1

Land Use Census

Distance in Miles from the Unit 1 Center Line to the Nearest Milk Animal, Residence, Vegetable Garden

22½ Degree[1] Radial Sector	Nearest Milk Animal	Nearest Residence km (mi)	Residence Azimuth Degree	Nearest Vegetable Garden km (mi)
NW	None	1.93 (1 2)	319.5	None
NNW	None	2.41 (1 5)	331	None
N	None	None	—	None
NNE	None	5.3 (3 3)	018.5	None
NE	None	7.89 (4 9)	036	None
ENE	None	7.08 (4.4)	063.5	None
E	None	5.95 (3 7)	097.5	None
E	None	7.24 (4.5)	098	7.24 (4.5)
ESE	None	None	—	5.28 (3.3)[2]
SE	None	None	—	None

Table Notation:

(1) Sectors not shown contain no land beyond the site boundary, other than islets not used for the purposes indicated in this table.

(2) The vegetable garden indicated is the farm along the site access road; however, it does not grow broadleaf vegetation.