REVISIONS		
REV.	ZONE	DESCRIPTION
17	MULTI	ECD C212005

CONTAINMENT SPRAY HEADERS (4) 2 EACH SYSTEM

CONTAINMENT SPRAY PUMPS 3,000 GPM EACH

CONTAINMENT SPRAY PUMPS 3,000 GPM EACH

HEAT EXCHANGERS

HEAT EXCHANGERS

REACTOR BLDG. WALL

PIPE TUNNEL WALL

NOTES:

1. SEE VALVE LABELING NOTE.
2. NUMBERS IN PARANTHESIS ( ) ARE GE IDENTIFICATION NUMBERS.
3. THIS DRAWING IS FOR THE PURPOSE OF ILLUSTRATING THE IN SERVICE INSPECTION ISI CLASSIFICATION AND BOUNDARIES. NO CONNECTION IS TO BE MADE BETWEEN ISI CLASS, SEISMIC CLASS OR WHETHER OR IS NOT NUCLEAR SAFETY RELATED (NSR). FOR NSR, SEISMIC AND DESIGN BASIS CLASSIFICATIONS REFER TO TECH. FUNCTIONS STANDARD ES-001.
4. THERMOWELL IS NORMALLY EMPTY AND CAPPED. IT IS DESIGNED FOR TEMPERATURE INSTRUMENTS TO BE INSTALLED WHEN OBTAINING HX PERFORMANCE DATA.

COLOR LEGEND

CLASS 2 - RED
CLASS 3 - GREEN
NON CLASS (-) - BLACK

CAD FILE: G3E.241.A1.0001.001-.1701
THIS IS A COMPUTER GENERATED DWG. DO NOT REVISE IT MANUALLY

THIS DRAWING HAS BEEN UPDATED TO REV. 34 OF DWG. GE 148F740.

NO.	DWG. NO.	TITLE
3	BR-2001 SH3	MECHANICAL DRAWING INDEX
2	BR-2001 SH2	ABBREVIATIONS
1	BR-2001 SH1	MECHANICAL SYMBOLS
		REFERENCES

T.W.USZKO 2-6-98 DRAWN DATE
CHECKED DATE
DESIGN LEADER DATE
ENGINEER DATE
MANAGER APPROVAL DATE

GPU NUCLEAR

CONTAINMENT SPRAY SYS.

ISI BOUNDARY DRAWING

CYSTER CREEK | DWG. NO. GU 3E-241-A1-001 | SH. 1 OF 1 | REV. 17 | SCALE: NONE

ENG. MECH. | BA | V.O.

GU 3E-241-A1-001

REVISIONS		
REV.	ZONE	DESCRIPTION
10	G-5	ADMINISTRATIVE CHANGE PER CNT #171351

TORUS WATER STORAGE TANK T-243-1

FILTER F-24-1

PUMP P-24-1

4"FLEX CONNECTION

HEAT TRACED INSUL.

YARD AREA

REACTOR BLDG INTERIOR WALL

ABOVE GROUND

UNDER GROUND

4" U.G.

DRYWELL

TORUS

BAY 20

78" DRYWELL TO TORUS VENT LINE(TYP 7 PL.)

ASSEMBLY "A"

ASSEMBLY "B"

ASSEMBLY "C"

ASSEMBLY "D"

ASSEMBLY "E"

ASSEMBLY "F"

ASSEMBLY "G"

24" CS-2 (NO2-2) (TYP. 7) ASSEMBLIES

16" CS-2 (NO2-1) (TYP. 7) ASSEMBLIES

20" CS-2 (NO2-1)

20" CS-2 (NO2-2)

4" NO2 HDR

PR-537/ LR-37

PR-547/ LR-38

WIDE RANGE

TORUS WATER LEVEL

TORUS WATER LEVEL NARROW RANGE

VARIABLE LEG

REFERENCE LEG

NOTES:

1. SEE VALVE LABELING NOTE.
2. THIS DRAWING IS FOR THE PURPOSE OF ILLUSTRATING THE IN SERVICE INSPECTION (ISI) CLASSIFICATION AND BOUNDARIES. NO CONNECTION IS TO BE MADE BETWEEN ISI CLASS, SEISMIC CLASS OR WHETHER A LINE IS OR IS NOT NUCLEAR SAFETY RELATED (NSR). FOR NSR, SEISMIC OR OTHER DESIGN BASIS CLASSIFICATION REFER TO TECH. FUNCTIONS STANDARD ES-001.
3. ISI BOUNDARY ENDS AT V-16-76.
4. ISI BOUNDARY ENDS AT V-38-61.
5. ISI BOUNDARY ENDS AT V-23-16, V-23-20 & V-23-259.
6. ISI BOUNDARY ENDS AT V-28-17.

LABELING NOTE:

ALL VALVES ON THIS SHEET ARE PREFIXED V-38 UNLESS OTHERWISE NOTED

COLOR LEGEND

CLASS 2 - RED
NON CLASS (-) - BLACK

CAD FILE: G3E,243,A1,000 ,001-,1001
THIS IS A COMPUTER GENERATED DWG. DO NOT REVISE IT MANUALLY

THIS DRAWING HAS BEEN UPDATED TO REV.17 OF DWG GU 3E-243-21-1000.SH1

NO.	DWG. NO.	TITLE
		REFERENCES
11	GE 112C2627 SH4	SPEC CONTROL RACK (RNG 3 RECTRC PUMP REACTOR PROT., & NSS SYS).
10	3E-666-21-1001 SH1	HYDROGEN & OXYGEN MONITERING SYS.F.D.
9	SN 1343219 SH1	NITROGEN SUPPLY SYSTEM F.D.
8	BR-M0012 SH1	POST ACCIDENT SAMPLING F.D.
7	GE 885E781 SH1	CORE SPRAY SYSTEM F.D.
6	GE 148F740 SH1	CONTAINMENT SPRAY SYSTEM F.D.
5	BR-2011 SH3	REACTOR BUILDING VENTILATION
4	BR-2004 SH1	DEMINERALIZED WATER TRANSFER SYSTEM F.D.
3	BR-2001 SH3	MECHANICAL DRAWING INDEX
2	BR-2001 SH2	MECHANICAL ABBREVIATIONS
1	BR-2001 SH1	MECHANICAL SYMBOLS

GPU NUCLEAR

DRYWELL AND TORUS VACUUM RELIEF SYSTEM ISI BOUNDARY DRAWING

DRAWN	M. ROSS	04/16/97 DATE
CHECKED	NICK TITOLO	04/21/97 DATE
DESIGN LEADER	N/A	DATE
ENGINEER MANAGER APPROVAL		4/24/97 DATE

OYSTER CREEK

DWG. NO. GU 3E-243-A1-001 SH. 1 OF 1 REV. 10

SCALE: NONE

ENG.MECH. BA W.S.

GU 3E-243-A1-0001 SH 1 OF 1

LABELING NOTE:

ALL VALVES ON THIS SHEET ARE PREFIXED BY V-18 UNLESS OTHERWISE NOTED.

GENERAL NOTES:

1. ALL VALVES FAIL CLOSED UNLESS OTHERWISE DESIGNATED.
2. ALL RADWASTE ALARMS WILL BE ON AN ANNUNCIATOR ON THE RADWASTE PANEL. A COMMON TROUBLE ALARM WILL ANNUNCIATE IN THE MAIN CONTROL ROOM.
3. NUMBERS IN PARENTHESES ARE A.E. IDENTIFICATION NUMBERS.
4. FOR EQUIPMENT MARKED NNXX & NVXX SEE 191X897. FOR EQUIPMENT MARKED INXX & IMXX SEE 194X559 & 194X558.
5. THIS DRAWING IS FOR THE PURPOSE OF ILLUSTRATING THE IN SERVICE INSPECTION (ISI) CLASSIFICATION AND BOUNDARIES. NO CONNECTION IS TO BE MADE BETWEEN ISI CLASS, SEISMIC CLASS OR WHETHER A LINE IS OR IS NOT NUCLEAR SAFETY RELATED (NSR). FOR NSR, SEISMIC OR OTHER DESIGN BASIS CLASSIFICATIONS REFER TO TECH. FUNCTIONS STANDARD ES-001.

REV.	ZONE	REVISIONS
16	NA	(1) ECD C307669 ROLL-UP, (2) ECD C306617 AS FOUND

NO.	DWG. NO.	TITLE
3	BR-2001 SH3	MECHANICAL DRAWING INDEX
2	BR-2001 SH2	ABBREVIATIONS
1	BR-2001 SH1	MECHANICAL SYMBOLS

REFERENCES

CAD FILE NAME : GU 3E-251-A1-001 S1 R16

REVISION 15 OF THIS DWG. WAS TRANSLATED TO AUTOCAD FROM CADAM
FILE: G3E,251,A1,0001,001-,150F

THIS IS A COMPUTER GENERATED DRAWING DO NOT REVISE IT MANUALLY

GPU NUCLEAR

T.WUSZKO,JR. 8-20-98
M.BUTTON 8-20-98
8/21/98
N/A
N/A

SPENT FUEL
POOL COOLING
ISI BOUNDARY

OYSTER CREEK

DWG. NO. 3E-251-A1-001 | SH. 1 | REV. 16

SCALE : NONE

PIMS #

DWG.NO. 3E-251-A1-001 SH. 1

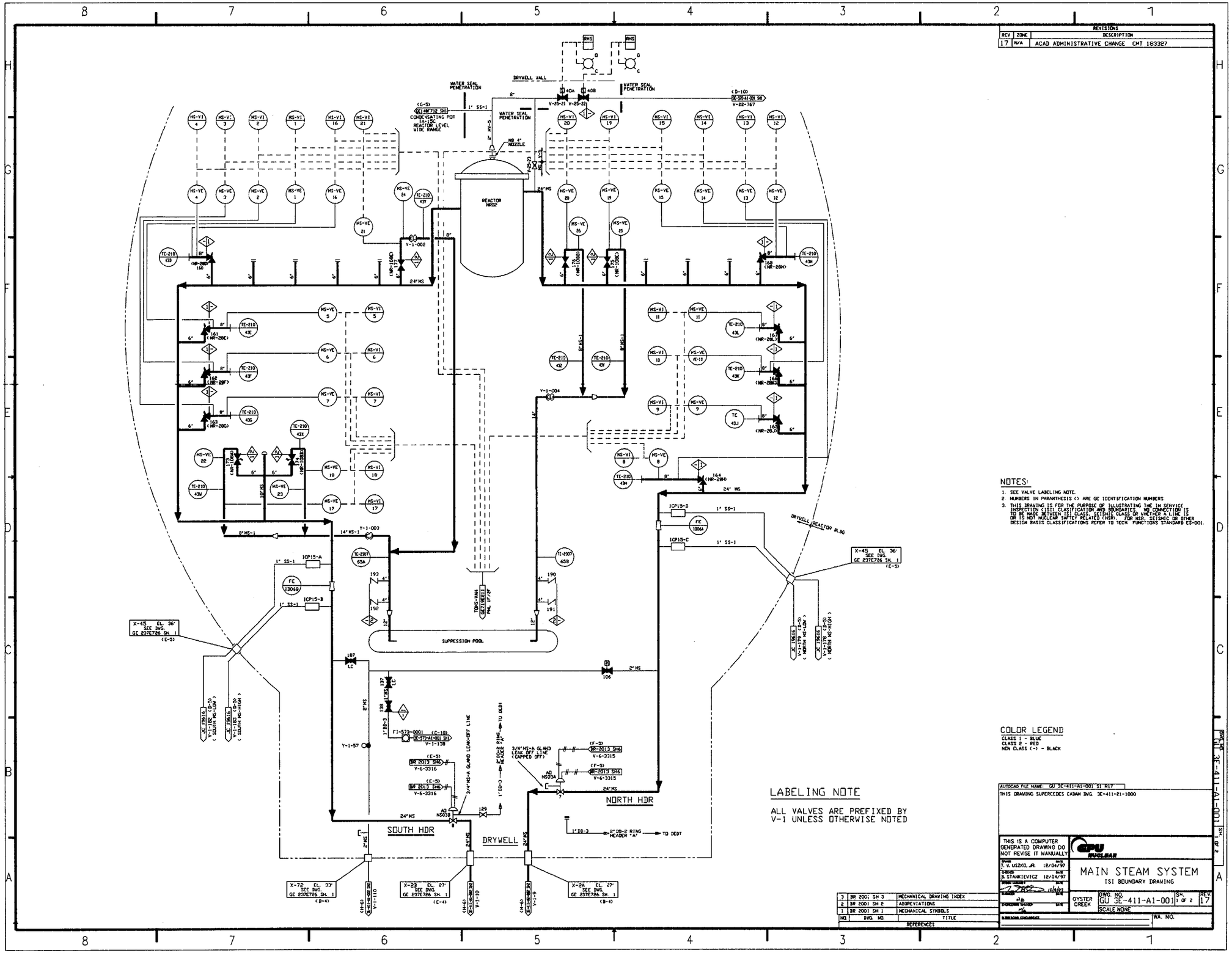

REVISIONS
REV | ZONE | DESCRIPTION
17 | N/A | ACAD ADMINISTRATIVE CHANGE CMT 183327
DRYWELL WALL
WATER SEAL PENETRATION
REACTOR NR02
SUPPRESSION POOL
SOUTH HDR
DRYWELL
NORTH HDR
DRYWELL REACTOR BLDG
NOTES:
1. SEE VALVE LABELING NOTE.
2. NUMBERS IN PARANTHESIS ( ) ARE GE IDENTIFICATION NUMBERS
3. THIS DRAWING IS FOR THE PURPOSE OF ILLUSTRATING THE IN SERVICE INSPECTION (ISI) CLASIFICATION AND BOUNDARIES. NO CONNECTION IS TO BE MADE BETWEEN ISI CLASS, SEISMIC CLASS OR WHETHER A LINE IS OR IS NOT NUCLEAR SAFTEY RELATED (NSR). FOR NSR, SEISMIC OR OTHER DESIGN BASIS CLASSIFICATIONS REFER TO TECH. FUNCTIONS STANDARD ES-001.
COLOR LEGEND
CLASS 1 - BLUE
CLASS 2 - RED
NON CLASS (-) - BLACK
LABELING NOTE
ALL VALVES ARE PREFIXED BY V-1 UNLESS OTHERWISE NOTED
AUTOCAD FILE NAME: GU 3E-411-A1-001 SI R17
THIS DRAWING SUPERCEDES CADAM DWG. 3E-411-21-1000
THIS IS A COMPUTER GENERATED DRAWING DO NOT REVISE IT MANUALLY
T. V. USZKO, JR. 12/04/97
B. STANKIEVICZ 12/04/97
MAIN STEAM SYSTEM
ISI BOUNDARY DRAWING
OYSTER CREEK
DWG. NO. GU 3E-411-A1-001
SH. 1 OF 2
REV. 17
SCALE NONE
WA. NO.
3 | BR 2001 SH 3 | MECHANICAL DRAWING INDEX
2 | BR 2001 SH 2 | ABBREVIATIONS
1 | BR 2001 SH 1 | MECHANICAL SYMBOLS
NO. | DWG. NO. | TITLE
REFERENCES

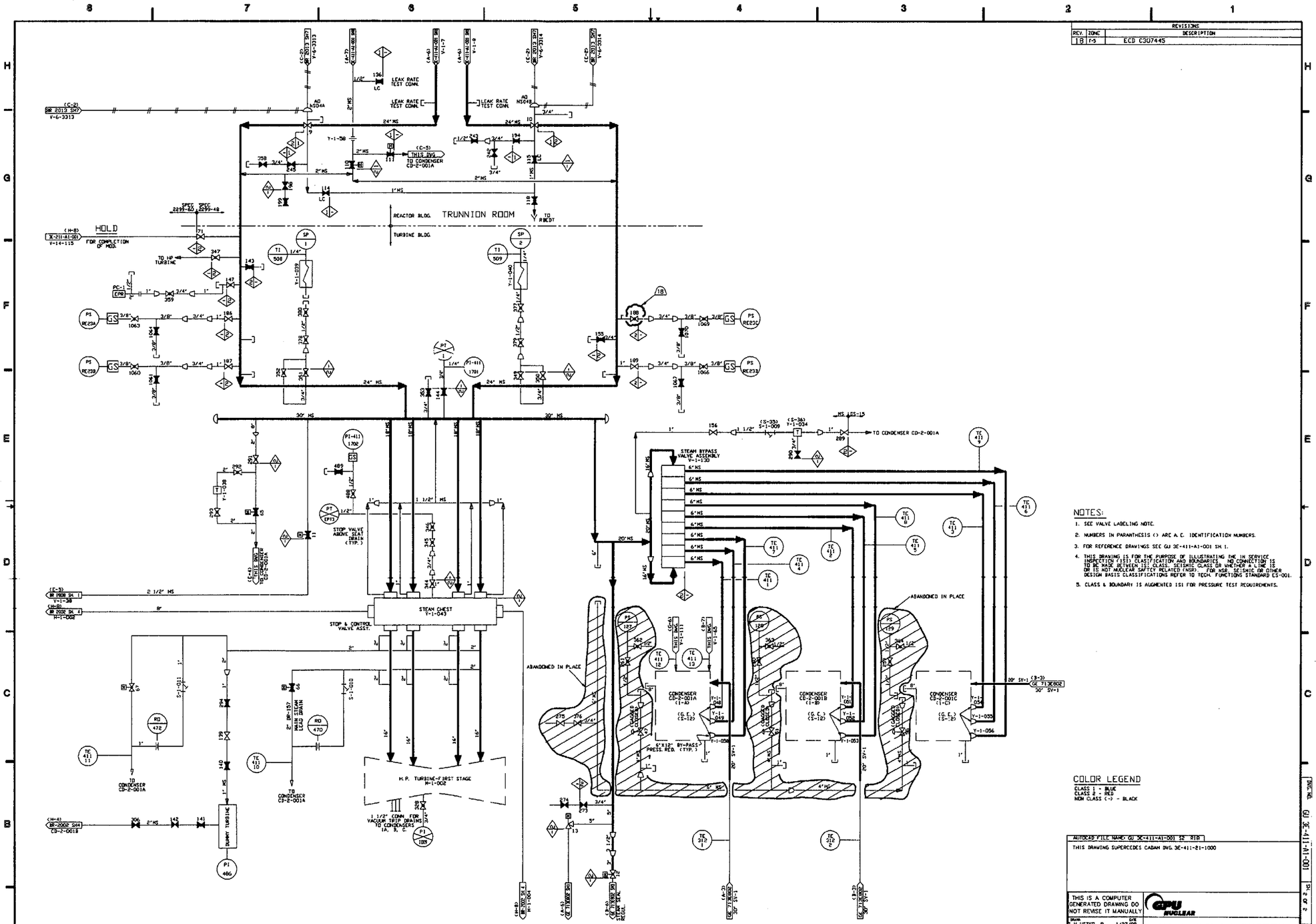

NOTES:

1. SEE VALVE LABELING NOTE.
2. NUMBERS IN PARANTHESIS () ARE A.C. IDENTIFICATION NUMBERS.
3. FOR REFERENCE DRAWINGS SEE GU 3E-411-A1-001 SH 1.
4. THIS DRAWING IS FOR THE PURPOSE OF ILLUSTRATING THE IN SERVICE INSPECTION (ISI) CLASSIFICATION AND BOUNDARIES. NO CONNECTION IS TO BE MADE BETWEEN ISI CLASS, SEISMIC CLASS OR WHETHER A LINE IS OR IS NOT NUCLEAR SAFTEY RELATED (NSR). FOR NSR, SEISMIC OR OTHER DESIGN BASIS CLASSIFICATIONS REFER TO TECH. FUNCTIONS STANDARD ES-001.
5. CLASS & BOUNDARY IS AUGMENTED ISI FOR PRESSURE TEST REQUIREMENTS.

COLOR LEGEND

CLASS 1 - BLUE
CLASS 2 - RED
NON CLASS (-) - BLACK

LABELING NOTE

ALL VALVES ARE PREFIXED BY V-1 UNLESS OTHERWISE NOTED

REVISIONS		
REV.	ZONE	DESCRIPTION
18	F-5	ECD C307445

AUTOCAD FILE NAME: GU 3E-411-A1-001 S2 R18

THIS DRAWING SUPERCEDES CADAM DWG. 3E-411-21-1000

THIS IS A COMPUTER GENERATED DRAWING DO NOT REVISE IT MANUALLY

GPU NUCLEAR

DRAWN T.W. USZKO, JR. 1/27/98
CHECKED B. STANKIEWICZ 1/27/98

MAIN STEAM SYSTEM
ISI BOUNDARY DRAWING

OYSTER CREEK | DWG. NO. GU 3E-411-A1-001 | SH. 2 OF 2 | REV. 18
SCALE : NONE

NO.	DWG. NO.	TITLE
REFERENCES		

WA. NO.

DWG. NO. GU 3E-411-A1-001 SH. 2 OF 2

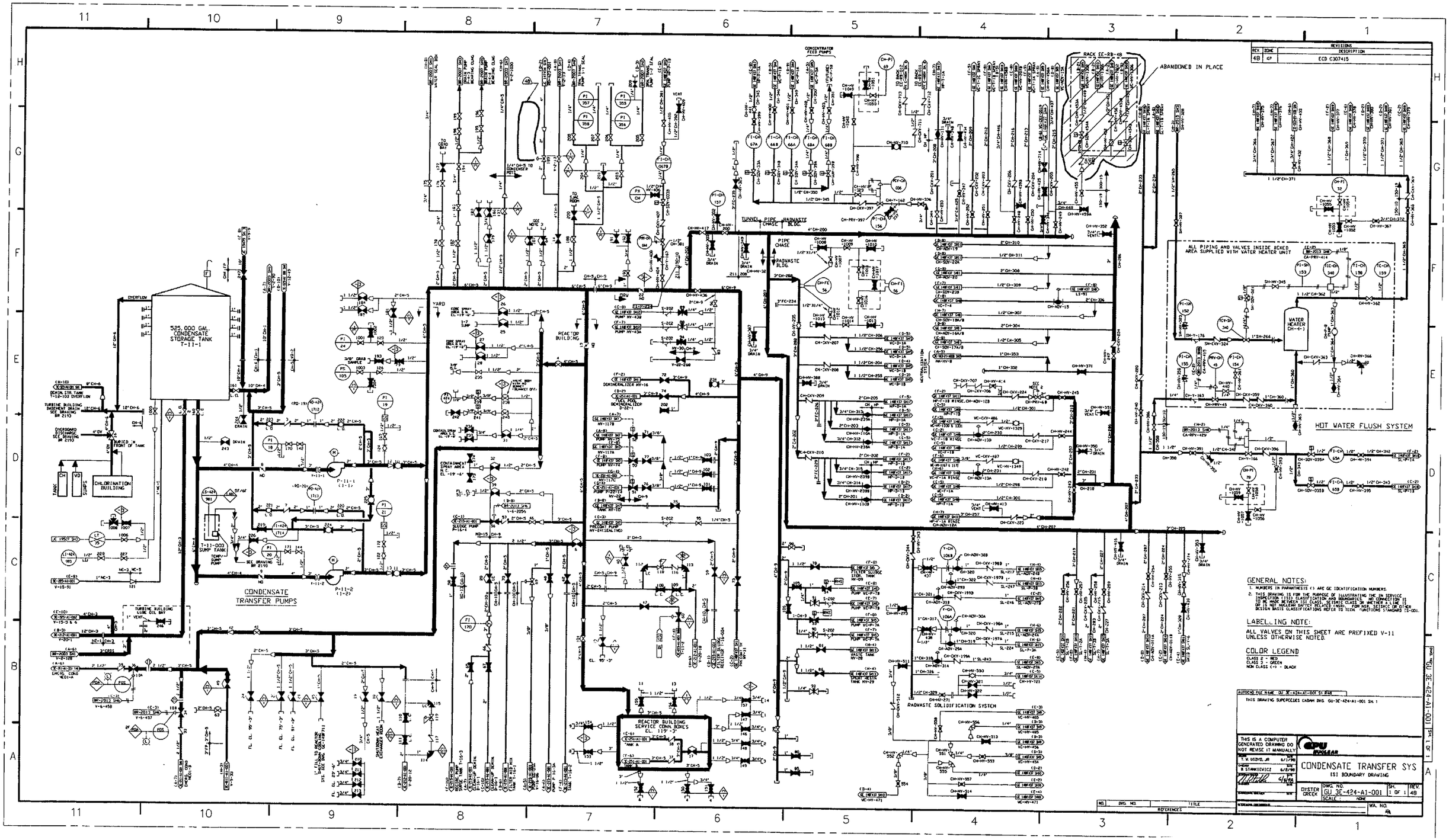

REV.	ZONE	REVISIONS DESCRIPTION
48	G7	ECD C307415

GENERAL NOTES:

1. NUMBERS IN PARANTHESIS (-) ARE GE IDENTIFICATION NUMBERS.
2. THIS DRAWING IS FOR THE PURPOSE OF ILLUSTRATING THE IN SERVICE INSPECTION (ISI) CLASSIFICATION AND BOUNDARIES. NO CONNECTION IS TO BE MADE BETWEEN ISI CLASS, SEISMIC CLASS OR WHETHER A LINE IS OR IS NOT NUCLEAR SAFETY RELATED (NSR). FOR NSR, SEISMIC OR OTHER DESIGN BASIS CLASSIFICATIONS REFER TO TECH. FUNCTIONS STANDARD (S-00).

LABELLING NOTE:

ALL VALVES ON THIS SHEET ARE PREFIXED V-11 UNLESS OTHERWISE NOTED.

COLOR LEGEND

CLASS 2 - RED
CLASS 3 - GREEN
NON CLASS (-) - BLACK

AUTOCAD FILE NAME: GU 3E-424-A1-001 S1 R48

THIS DRAWING SUPERCEDES CADAM DWG. GU-3E-424-A1-001 SH. 1

THIS IS A COMPUTER GENERATED DRAWING DO NOT REVISE IT MANUALLY

T. W. OSZKO, JR 6/1/98
B. STANKIEWICZ 6/2/98
6/4/98

CPU NUCLEAR

CONDENSATE TRANSFER SYS
ISI BOUNDARY DRAWING

OYSTER CREEK

DWG. NO. GU 3E-424-A1-001 | SH. 1 OF 1 | REV. 48

SCALE: NONE

WA. NO.

NO.	DWG. NO.	TITLE
		REFERENCES

DWG. NO. GU 3E-424-A1-001 SH. 1 OF 1

EMERGENCY SERVICE WATER PUMPS

EMERGENCY SERVICE WATER PUMPS

REVISIONS		
REV	ZONE	DESCRIPTION
29	E-8	ECD C307658

NOTES:

1. SEE VALVE LABELING NOTE.
2. NUMBERS IN PARENTHESIS () ARE QE IDENTIFICATION NUMBERS.
3. THIS DRAWING IS FOR THE PURPOSE OF ILLUSTRATING THE IN SERVICE INSPECTION (ISI) CLASSIFICATION AND BOUNDARIES. NO CONNECTION IS TO BE MADE BETWEEN ISI CLASS, SEISMIC CLASS OR WHETHER THE LINE IS OR IS NOT NUCLEAR SAFETY RELATED (NSR). FOR NSR, SEISMIC OR OTHER DESIGN BASIS CLASSIFICATIONS REFER TO TECH. FUNCTIONS STANDARD ES-001.
4. FE-3-0499 & FE-3-1743 PIF SENSOR FLANGES INSTALLED UNDER QC-IS-402226-001 ARE 5"-150# MONEL (NICU ALLOY 400) AND HAVE A MAXIMUM DESIGN PRESSURE RATING OF 230 PSIG @ 100°F MAX. FOR FURTHER DETAIL SEE DS SU-1711.
5. THERMOWELL IS NORMALLY EMPTY AND CAPPED. IT IS DESIGNED FOR TEMPERATURE INSTRUMENTS TO BE INSTALLED WHEN OBTAINING HX PERFORMANCE DATA.

COLOR LEGEND

CLASS 3 - GREEN
NON CLASS (-) - BLACK

LABELING NOTE:

ALL VALVES ON THIS SHEET ARE PREFIXED V-3 UNLESS OTHERWISE NOTED.

CAD FILE NAME: GU 3E-532-A1-001.SO.R29
REVISION 29 OF THIS DRAWING WAS TRANSLATED TO AUTOCAD FROM CADAM FILE NO GSE_532_A1_0001_001-3801

THIS IS A COMPUTER GENERATED DRAWING DO NOT REVISE IT MANUALLY

NO.	DWG. NO.	TITLE
	REFERENCES	

GPU NUCLEAR

EMERGENCY SERVICE WATER SYSTEM
ISI BOUNDARY DRAWING

OYSTER CREEK	DWG. NO. 3E-532-A1-001	SH. 1 of 1	REV. 29
	SCALE NONE	PHMS #	N/A

3E-532-A1-001 Sheet 1 of 1

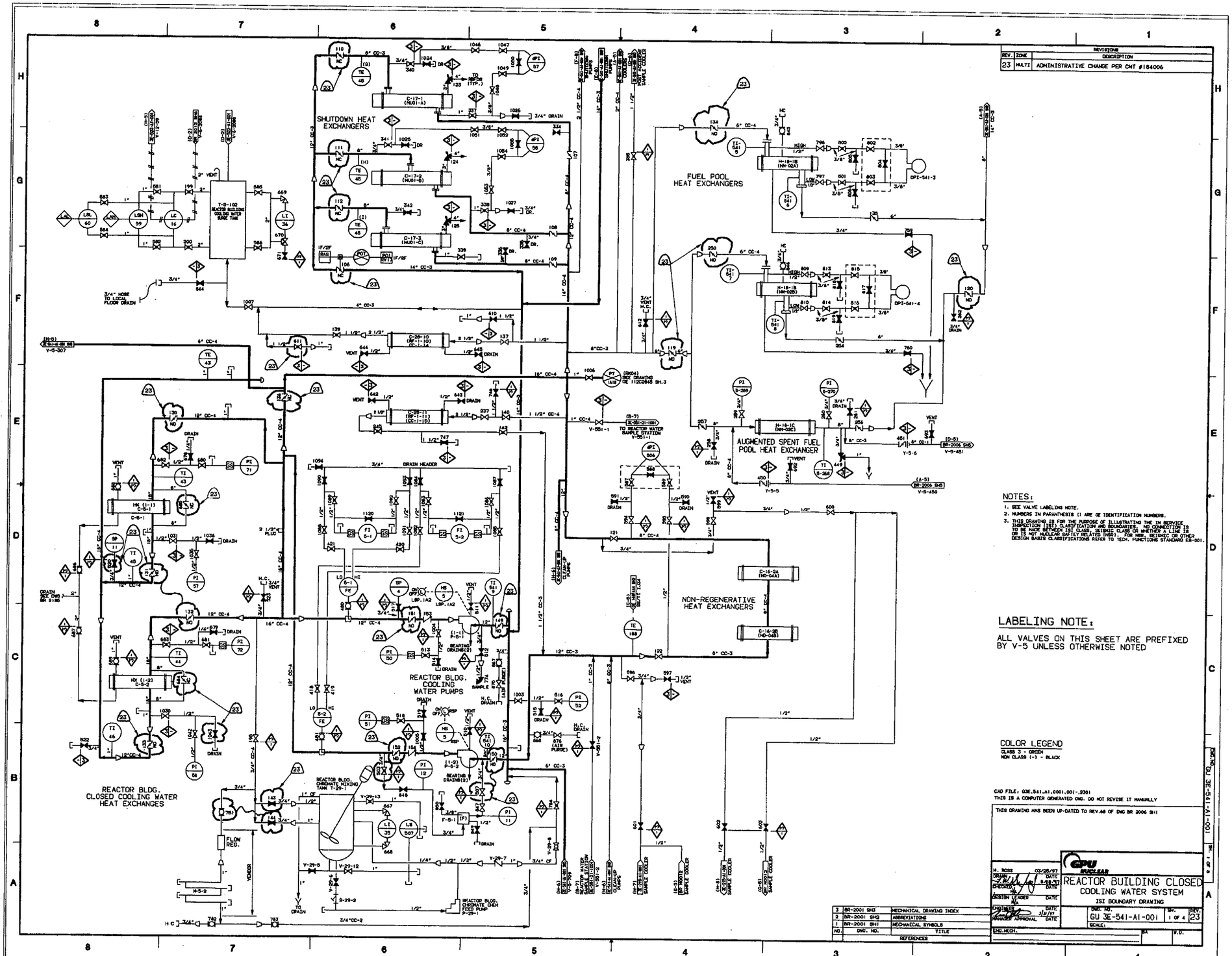

REV.	ZONE	DESCRIPTION
23	MULTI	ADMINISTRATIVE CHANGE PER CHT #184006

NOTES:

1. SEE VALVE LABELING NOTE.
2. NUMBERS IN PARANTHESIS () ARE GE IDENTIFICATION NUMBERS.
3. THIS DRAWING IS FOR THE PURPOSE OF ILLUSTRATING THE IN SERVICE INSPECTION (ISI) CLASSIFICATION AND BOUNDARIES. NO CONNECTION IS TO BE MADE BETWEEN ISI CLASS, SEISMIC CLASS OR WHETHER A LINE IS OR IS NOT NUCLEAR SAFTEY RELATED (NSR). FOR NSR, SEISMIC OR OTHER DESIGN BASIS CLASSIFICATIONS REFER TO TECH. FUNCTIONS STANDARD ES-001.

LABELING NOTE:

ALL VALVES ON THIS SHEET ARE PREFIXED BY V-5 UNLESS OTHERWISE NOTED

COLOR LEGEND
CLASS 3 - GREEN
NON CLASS (-) - BLACK

CAD FILE: G3E.S41.A1.0001.001-.2301
THIS IS A COMPUTER GENERATED DWG. DO NOT REVISE IT MANUALLY

THIS DRAWING HAS BEEN UP-DATED TO REV.68 OF DWG BR 2006 SH1

GPU NUCLEAR

REACTOR BUILDING CLOSED COOLING WATER SYSTEM
ISI BOUNDARY DRAWING

DWG. NO. GU 3E-541-A1-001 | SH. 1 OF 4 | REV. 23

SCALE:

DRAWN: H. ROSS 03/25/97
DESIGN: N/A
DESIGN LEADER: N/A
ENGINEER: 3/31/97
MANAGER APPROVAL
ENG.MECH.
QA
V.O.

DWG. GU 3E-541-A1-001 SH. 1 OF 4

REVISIONS		
REV.	ZONE	DESCRIPTION
4	D-3,4	ADMINISTRATIVE CHANGE PER CMT #184006

SHUTDOWN PUMPS

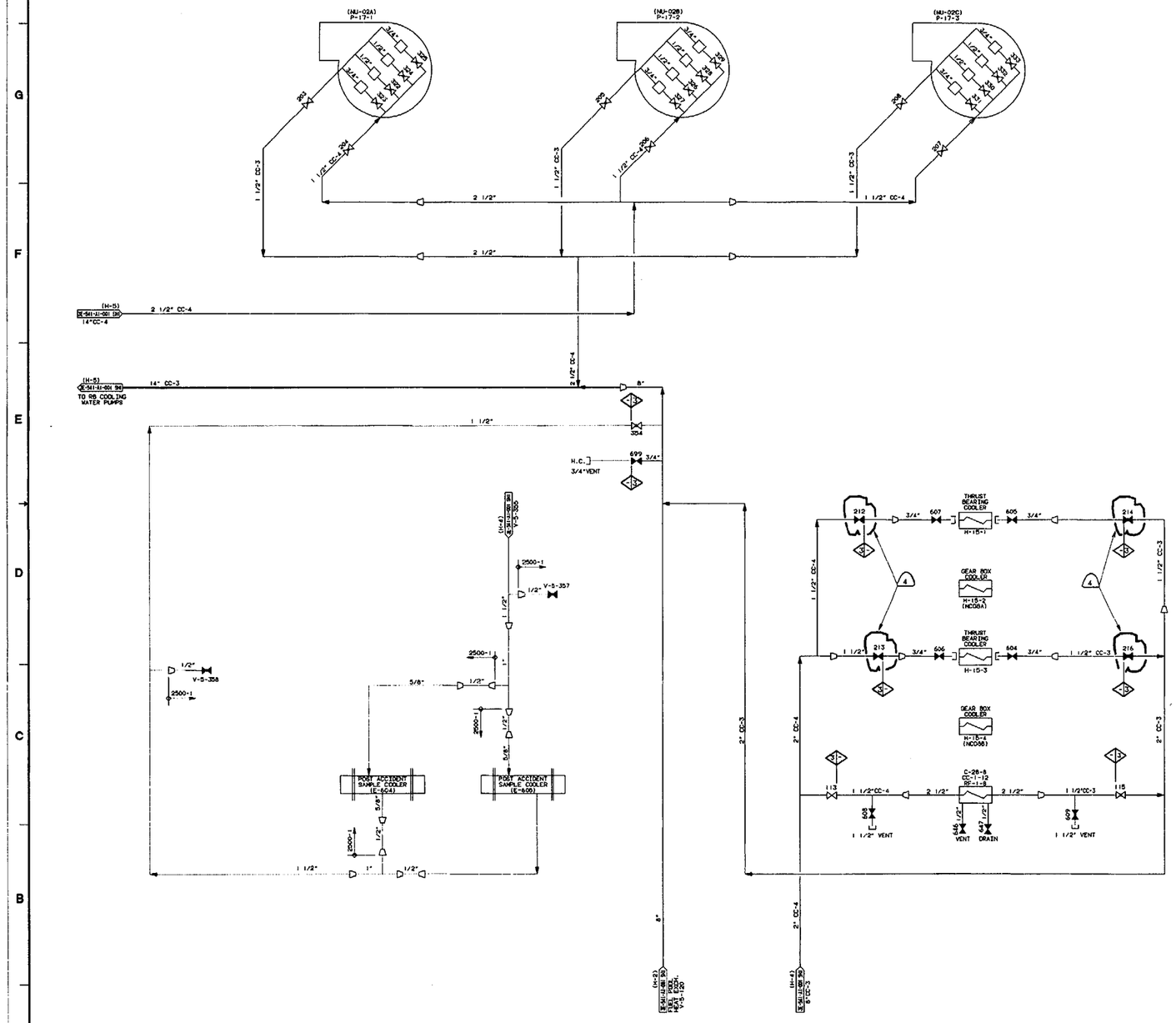

NOTES:

1. SEE SHEET 1 FOR NOTES AND REFERENCES.
2. THIS DRAWING HAS BEEN UP-DATED TO REV. 40 OF DWG. GR-2006 SH. 2.
3. THIS DRAWING IS FOR THE PURPOSE OF ILLUSTRATING THE IN SERVICE INSPECTION ISI1 CLASSIFICATION AND BOUNDARIES. NO CONNECTION IS TO BE MADE BETWEEN ISI CLASS, SEISMIC CLASS OR WHETHER A LINE IS OR IS NOT NUCLEAR SAFTEY RELATED (NSR1 - FOR NSR, SEISMIC OR OTHER DESIGN BASIS CLASSIFICATIONS REFER TO TECH. FUNCTIONS STANDARD ES-001.
4. NUMBERS IN PARANTHESIS () ARE A.E. IDENTIFICATION NUMBERS.
5. SEE VALVE LABELING NOTE.

COLOR LEGEND

CLASS 3 - GREEN
NON CLASS (-) - BLACK

LABELING NOTE:

ALL VALVES ON THIS SHEET ARE PREFIXED BY V-5 UNLESS OTHERWISE NOTED

CAD FILE: 03E.541.A1.0001.002-.0401
THIS IS A COMPUTER GENERATED DWG. DO NOT REVISE IT MANUALLY

NO.	DWG. NO.	TITLE
	REFERENCES	

M. ROSS DESIGNER	03/24/97 DATE	GPU NUCLEAR
CHECKED	DATE	REACTOR BUILDING CLOSED COOLING WATER SYSTEM ISI BOUNDARY DRAWING
DESIGN LEADER	DATE	
ENGINEER	DATE	OYSTER CREEK | DWG. NO. GU 3E-541-A1-0001 | SH. 2 OF 4 | REV. 4
MANAGER APPROVAL	DATE	SCALE: NONE

END. MECH. | BA | W.O.

GU 3E-541-A1-0001 SH 2 OF 4

USER: PWC DWGPW4005 SCALE: 1.000 DRAWING=ROSS1A1.0001.002-.0401
DATE: 3/24/97 TIME: 08:48:49 ACCESS=ONE
PLOT: 11:53

REVISIONS		
REV.	ZONE	DESCRIPTION
15	A-B-5 C-3	ADMINISTRATIVE CHANGE PER CMT #184006

NOTES:

1. SEE SHEET 1 FOR NOTES AND REFERENCES.
2. THIS DRAWING IS FOR THE PURPOSE OF ILLUSTRATING THE IN SERVICE INSPECTION (ISI) CLASSIFICATION AND BOUNDARIES. NO CONNECTION IS TO BE MADE BETWEEN ISI CLASS, SEISMIC CLASS OR WHETHER A LINE IS OR IS NOT NUCLEAR SAFETY RELATED (NSR). FOR NSR, SEISMIC OR OTHER DESIGN BASIS CLASSIFICATIONS REFER TO TECH. FUNCTIONS STANDARD ES-001.
3. NUMBERS IN PARENTHESIS ( ) ARE A.E. IDENTIFICATION NUMBERS.
4. SEE VALVE LABELING NOTE.

LABELING NOTE:

ALL VALVES ON THIS SHEET ARE PREFIXED BY V-5 UNLESS OTHERWISE NOTED

COLOR LEGEND
CLASS 2 - RED
CLASS 3 - GREEN
NON CLASS (-) - BLACK

CAD FILE: G3E_541_A1_0001_003-_1501
THIS IS A COMPUTER GENERATED DWG. DO NOT REVISE IT MANUALLY

THIS DRAWING HAS BEEN UPDATED TO REV. 50 OF BR-2006 SH.3

DRAWN	M. ROSS	03/25/97
CHECKED		5-29-97
DESIGN LEADER	N/A	
ENGINEER		
MANAGER APPROVAL		5-31-97

GPU NUCLEAR

REACTOR BUILDING CLOSED COOLING WATER SYSTEM
ISI BOUNDARY DRAWING

DWG. NO.	SH.	REV.
GU 3E-541-A1-001	3 OF 4	15

OYSTER CREEK

SCALE: NONE

NO.	DWG. NO.	TITLE	ENG. MECH.	BA	W.O.
		REFERENCES			

GU 3E-541-A1-001 SH. 3 OF 4

REVISIONS		
REV.	ZONE	DESCRIPTION
9	MULTI	ECO C21 1552

NOTES:

1. SEE VALVE LABELING NOTE.
2. SEE SHEET 1 FOR NOTES AND REFERENCES.
3. THIS DRAWING HAS BEEN UP-DATED TO REV. 40 OF DWG. BR-2006 SH. 7.
4. THIS DRAWING IS FOR THE PURPOSE OF ILLUSTRATING THE IN SERVICE INSPECTION (ISI) CLASIFICATION AND BOUNDARIES. NO CONNECTION IS TO BE MADE BETWEEN ISI CLASS, SEISMIC CLASS OR WHETHER A LINE IS OR IS NOT NUCLEAR SAFTEY RELATED (NSR). FOR NSR, SEISMIC OR OTHER DESIGN BASIS CLASSIFICATIONS REFER TO TECH. FUNCTIONS STANDARD ES-001.
5. NUMBERS IN PARANTHESIS () ARE A.E. IDENTIFICATION NUMBERS.

LABELING NOTE

ALL VALVES ON THIS SHEET PREFIXED CC-HV UNLESS OTHERWISE NOTED.

COLOR LEGEND

CLASS 3 - GREEN
NON CLASS (-) - BLACK

CAD FILE: GSE.541.A1.0001.004-.0901
THIS IS A COMPUTER GENERATED DWG. DO NOT REVISE IT MANUALLY

NO.	DWG. NO.	TITLE
1	BR-2006 SH.7	RADWASTE CLOSED COOLING WTR. SYS.

REFERENCES

M. ROSS	04/30/97	DATE
DRAWN		
V. TITOLO	05/14/97	DATE
CHECKED		
DESIGN LEADER	N/A DATE	
ENGINEER	N/A DATE	
MANAGER APPROVAL	DATE	

GPU NUCLEAR

RADWASTE CLOSED COOLING WATER SYSTEM
ISI BOUNDARY DRAWING

OYSTER CREEK | DWG. NO. GU 3E-541-A1-001 | SH. 4 OF 4 | REV. 9 | SCALE: NONE

ENG. MECH. | BA | W.O.

DWG NO. GU 3E-541-A1-001 | 9 | 4 OF 4

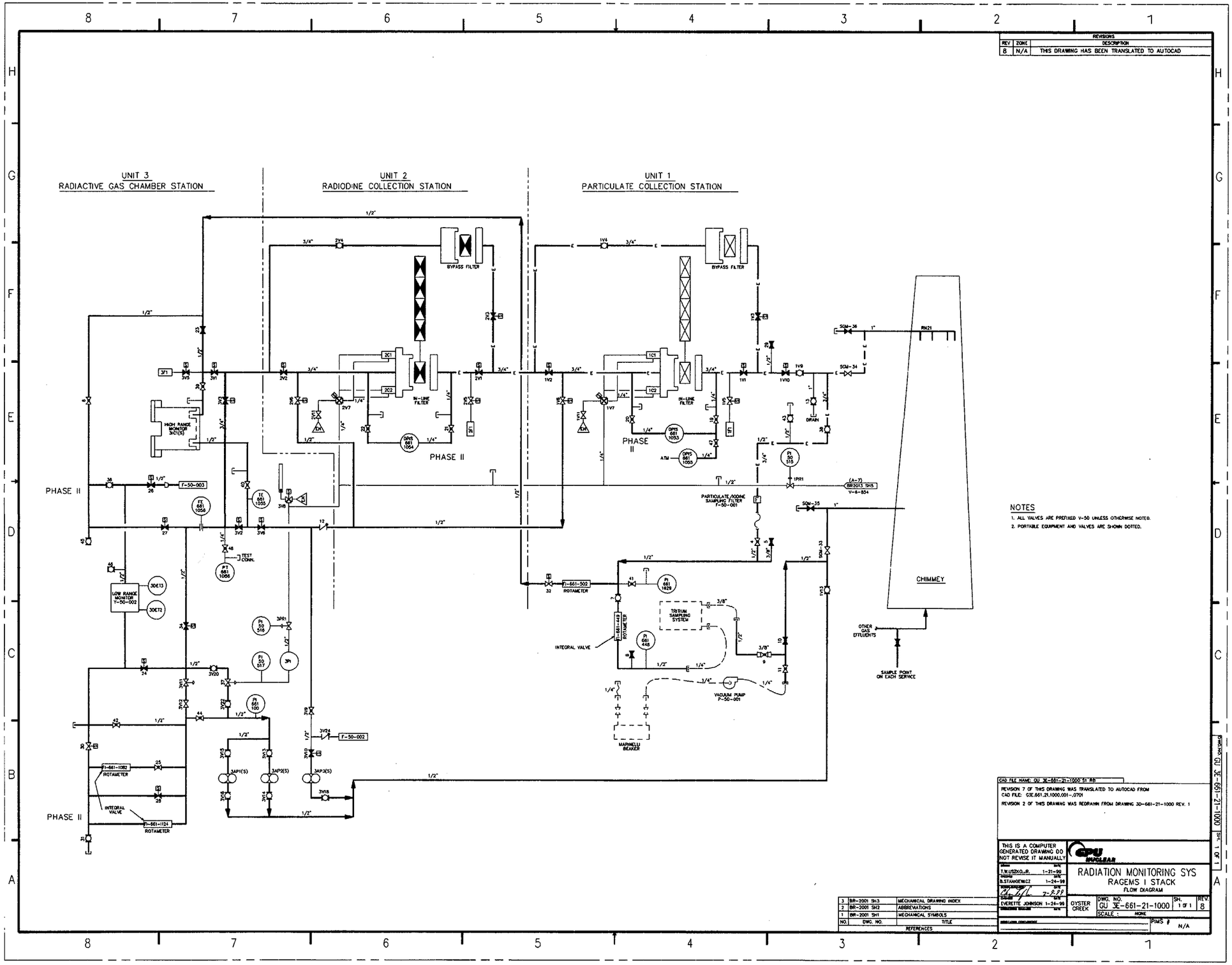

REV	ZONE	DESCRIPTION
8	N/A	THIS DRAWING HAS BEEN TRANSLATED TO AUTOCAD

NOTES

1. ALL VALVES ARE PREFIXED V-50 UNLESS OTHERWISE NOTED.
2. PORTABLE EQUIPMENT AND VALVES ARE SHOWN DOTTED.

CAD FILE NAME: GU 3E-661-21-1000 S1 R8

REVISION 7 OF THIS DRAWING WAS TRANSLATED TO AUTOCAD FROM CAD FILE: G3E.661.21.1000.001-.0701

REVISION 2 OF THIS DRAWING WAS REDRAWN FROM DRAWING 3D-661-21-1000 REV. 1

THIS IS A COMPUTER GENERATED DRAWING DO NOT REVISE IT MANUALLY

DRAWN	T.W.USZKO,JR.	1-21-99
CHECKED	B.STANIGEWICZ	1-24-99
		2-9-99
DESIGN	EVERETTE JOHNSON	1-24-99

GPU NUCLEAR

RADIATION MONITORING SYS
RAGEMS I STACK
FLOW DIAGRAM

OYSTER CREEK

DWG. NO. GU 3E-661-21-1000 | SH. 1 OF 1 | REV. 8

SCALE : NONE

PIMS # N/A

NO.	DWG. NO.	TITLE
3	BR-2001 SH3	MECHANICAL DRAWING INDEX
2	BR-2001 SH2	ABBREVIATIONS
1	BR-2001 SH1	MECHANICAL SYMBOLS

REFERENCES

DWG.NO. GU 3E-661-21-1000 SH. 1 OF 1

REVISIONS		
REV	ZONE	DESCRIPTION
2		ECO C314879

13.8 KV C.T. #1 GEN BREAKER (LOAD SIDE)

SEE REFERENCE NO. 9

800/5 (3)

3000/5 (3)

50/51 (3)

86 TX3-1 (1)

ALARM OYSTER CREEK & FRCT-1 TRIP
52G-1N
OPEN 52G-1N CLOSE CKT

52G-1N N.C.

3000/5 (3)

3000/5 (3)

CABLE 6-1/C-500 MCM & 2-1/C 250 MCM (GROUND) 1800 FT LONG (NOTE 1)

13.8 KV C.T. #2 GEN BREAKER (LOAD SIDE)

SEE REFERENCE NO. 9

ALARM OYSTER CREEK & FRCT-2 TRIP
52G-2N
OPEN 52G-2N CLOSE CKT

86 TX3-2 (1)

50/51 (3)

800/5 (3)

3000/5 (3)

52G-2N N.O.

3000/5 (3)

3000/5 (3)

CABLE 6-1/C-500 MCM & 2-1/C 250 MCM (GROUND) 1800 FT LONG (NOTE 1)

87T3-1 (3)

87TX3-1 (1)

ALARM OYSTER CREEK & FRCT-1
TRIP
52G-1N
52-1B0
OPEN 52G-1N CLOSE CKT
OPEN 52-1B0 CLOSE CKT

SW-743-159
1200 A NON-FUSED MANUAL CONTROLLED ELECTRICALLY OPERATED LOAD BREAK SWITCH (NOTE 4)

"A" N.C.

"B" N.O.

"C" N.C.

800/5 (3) SPARE

87T3-2 (3)

87TX3-2 (1)

ALARM OYSTER CREEK & FRCT-2
TRIP
52G-2N
52-1B0
OPEN 52G-2N CLOSE CKT
OPEN 52-1B0 CLOSE CKT

ALARM OYSTER CREEK & FRCT-1 & 2 (REF 16)

86/HR (L) 27-3 (L) 27-2 (L) 27-1 (L) 63 PR (L) 710-2 (L) 710-1 (L) 26Q (L) 68 (L) 49

SEE NOTE 7

2

CABLE 6-1/C 500 MCM & 4-1/C 250 MCM (GND) 40 FT LONG (NOTE 2)

1200/5 (3) H.V. SPARE

1200/5 (3) (800/5 CONN)

XMR-743-043
OYSTER CREEK STATION BLACKOUT TRANSFORMER (BANK #3)
10/12.5 MVA (OA/FA)
13.8/4.16 KV
Z=6%
H.V. TAP SET AT "3" FOR 13.8-4.16 KV RATIO

2

51N AT3 (1)

86 TX3-4 (1)

87T3-3 (3)

ALARM OYSTER CREEK & FRCT-1 & 2
TRIP
52G-1N
52G-2N
52-1B0
OPEN 52G-1N CLOSE CKT
OPEN 52G-2N CLOSE CKT
OPEN 52-1B0 CLOSE CKT

2000/5 (300/5 CONNECTED)

RESISTOR 2 OHMS, 1200A, 10 SEC.

2000/5 (3)

2000/5 (3)

51T (3)

86 TX3-3 (1)

ALARM OYSTER CREEK & FRCT-1 & 2
TRIP
52G-1N
52G-2N
52-1B0
OPEN 52G-1N CLOSE CKT
OPEN 52G-2N CLOSE CKT
OPEN 52-1B0 CLOSE CKT

2000/5 (3) SPARE

2000/5 (3)

PT 2400/120V

L.V. 1A 10A (1)

(NOTE 5)

120V POTENTIAL FEED FOR LINE DROP COMPENSATION & ASSOCIATED SENSING NETWORK ON OCSBO TRANSFORMER AUTOMATIC LOAD TAP CHANGER

ALARM OYSTER CREEK & FRCT-1 & 2
TRIP
52-1B0
OPEN 52-1B0 CLOSE CKT

86 TX3-5 (1)

CABLE 9-1/C-750MCM 240 FT LONG (NOTE 1)

B0

2000/5 (3)

51N (1)

51 (3)

PT-SB02 4200V/120V

B1

B0

(2)

2000/5 (3)

52G-2N (3)

A KVAR KW F V

SYNCH SEL SW

SYNCH SEL SW

TO 4160V 1B-B1C (LINE SIDE PT FOR S1B BRKR)

52G-1N (3)

B0

2000/5 (3)

SYNC SYNCH SCPE A

SYNC SYNCH SCPE B

(NOTE 3)

SYNC SYNC 25

27

52-1B0 N.O.

B0

PT-SB01 4200V/120V

B5

(1)

4160 V SWITCHGEAR "1B" 3000A BUS

RELAY & DEVICE NOMENCLATURE

50, 51	INSTANTANEOUS & TIME OVERCURRENT RELAYS
51N	GROUND OVERCURRENT RELAYS
51N-AT3	OYSTER CREEK STATION BLACKOUT TRANSFORMER NEUTRAL OVERCURRENT GROUND RELAY
52G-1N	GENERATOR AUXILIARY BREAKER NO. 1
52G-2N	GENERATOR AUXILIARY BREAKER NO. 2
86TX3-1Thru7	STATION GROUND OR PHASE FAULT LOCKOUT RELAY
87T3-1Thru3	TRANSFORMER DIFFERENTIAL RELAY
27	UNDERVOLTAGE RELAY
26Q	LIQUID TEMPERATURE INDICATOR RELAY
49	WINDING TEMPERATURE INDICATOR RELAY
86/HR	LOCKOUT RELAY FOR FAULT PRESSURE
68	VACUUM INTERUPTER FAILURE LATCHING RELAY
63PR	PRESSURE RELIEF
710	LIQUID LEVEL INDICATOR
25	SYNCHRONISM CHECK RELAY

EQUIPMENT LOCATION KEY

- ⚠ GENERATOR AUXILIARY CONTROL COMPARTMENT ● FORKED RIVER COMBUSTION TURBINE SITE
- ⊗ OYSTER CREEK STATION BLACKOUT AUXILIARY GENERATOR BREAKER NO. 1 CONTROL PANEL
- ⊗ OYSTER CREEK STATION BLACKOUT AUXILIARY GENERATOR BREAKER NO. 2 CONTROL PANEL
- ⊠ OYSTER CREEK STATION BLACKOUT 4160V SWITCHGEAR "1B"
- ⊠ OYSTER CREEK STATION BLACKOUT TRANSFORMER- XMR-743-043
- (L) LOCAL DEVICE MOUNTED ON THE EQUIPMENT
- (I) MECHANICAL INTERLOCK NON-PARALLING TYPE
- (M) MOTOR OPERATED MANUALLY CONTROLLED LOAD BREAK SWITCHES A, B & C
- ◯ OYSTER CREEK STATION BLACKOUT TRANSFORMER BUSHINGS
- □ OYSTER CREEK STATION BLACKOUT CONTROL PANEL ER-743-189
- (E) ELECTRICAL INTERLOCK

NOTES:

1. CABLE LENGTHS ARE APPROXIMATE.
2. THE GROUND CABLES FROM FORKED RIVER ARE TERMINATED DIRECTLY TO THE SBO TRANSFORMER GROUND.
3. SYNCHROSCOPES FOR FRCT-1 & FRCT-2 ARE USED TO MONITOR CLOSURE OF 52-1B0 FOR TESTING AND 52-S1B FOR RE-SYNCHING AFTER A STATION BLACKOUT EVENT.
4. LOAD BREAK SWITCH "A"&"B"ARE INTERLOCKED MECHANICALLY AND ELECTRICALLY TO PRECLUDE SIMULTANEOUSLY ENERGIZATION FROM THE TWO FRCT GENERATORS (C1&C2). LOAD BREAK SWITCH A,B, & C CAN BE MANUALLY OPERATED LOCALLY OR REMOTELY FROM SBO CONTROL PANEL ER-743-189.
5. THE 2400/120V POTENTIAL TRANSFORMER IS INSTALLED IN THE LOW VOLTAGE AIR FILLED JUNCTION BOX OF THE OCSBO TRANSFORMER.
6. THIS DRAWING REQUIRES COORDINATION OF BOTH JCP&L GENERATION ENGINEERING AND GPUN TECH.FUNCTIONS PRIOR TO ANY REVISIONS OF THIS DRAWING.
7. RELAY CONTACTS ARE JUMPERED. 2

NO.	DWG. NO.	TITLE
		REFERENCES
16	GE 169D9606	ELEMENTARY DIAGRAM SBO XFMR.ANN.
15	S&C CDT-159I282-WD	ELEMENTARY DIAGRAM LOAD BREAK SWITCH
14	GU 3E-743-11-009	LOGIC DIAGRAM GEN.AUX.BKR. (52G-1N & 52G-2N)
13	GU 3E-743-11-011	LOGIC DIAGRAM LOAD BKR SWITCH
12	GU 3E-743-11-012	LOGIC DIAGRAM 52-1B0
11	GU 3E-743-17-008	ELEMENTARY DIAGRAM 52G-2N
10	GU 3E-743-17-007	ELEMENTARY DIAGRAM 52G-1N
9	GU 3E-743-11-013 SH.1 & 2	GAS TURBINE ONE LINE DIAGRAM
8	GU 3E-743-11-006	ONE LINE DIAGRAM-COMB.TURB.AUXILLARIES
7	GU 3E-743-14-002	CABLE & CABLE BLS DETAILS
6	GU 3E-743-14-001	CONDUIT & CABLE TRAY LAYOUT
5	GU 3E-743-17-002	ELECTRICAL ELEMENTARY DIAGRAM-ANN.
4	GU 3E-743-17-001 SH. 1, 2 & 3	ELECTRICAL ELEMENTARY DIAGRAM 4160V SWGR BRKR 52-1B0
3	GU 3E-743-16-001	BLOCK DIAGRAM
2	GU 3E-743-15-001	4160V SWGR 1B UNIT B0 CABINET
1	GU 3E-743-15-002 SH. 1	CONTROL PANEL ER-743-189

CAD FILE NAME: GU 3E-743-11-001 S1 R2

REVISION 1 OF THIS DRAWING WAS TRANSLATED TO AUTOCAD FROM CAD FILE: G3E_743.11.0001.000-.0101

REGULATORY REQUIRED USE

THIS IS A COMPUTER GENERATED DRAWING DO NOT REVISE IT MANUALLY

GPU NUCLEAR

DRAWN J.GIDZINSKI 01/11/00

ENGINEER

ENGINEERING MANAGER

ENGINEER

ENGINEERING MANAGER N/A

SCHEDULE CONCURRENCE N/A

EMERGENCY POWER SYS
ONE LINE DIAGRAM
STATION BLACKOUT TRANSFORMER XMR-743-043

OYSTER CREEK

DWG. NO. 3E-743-11-001

SH. -

REV. 2

SCALE : NONE

BA.

WO.

DWG.NO. 3E-743-11-001 SH. -

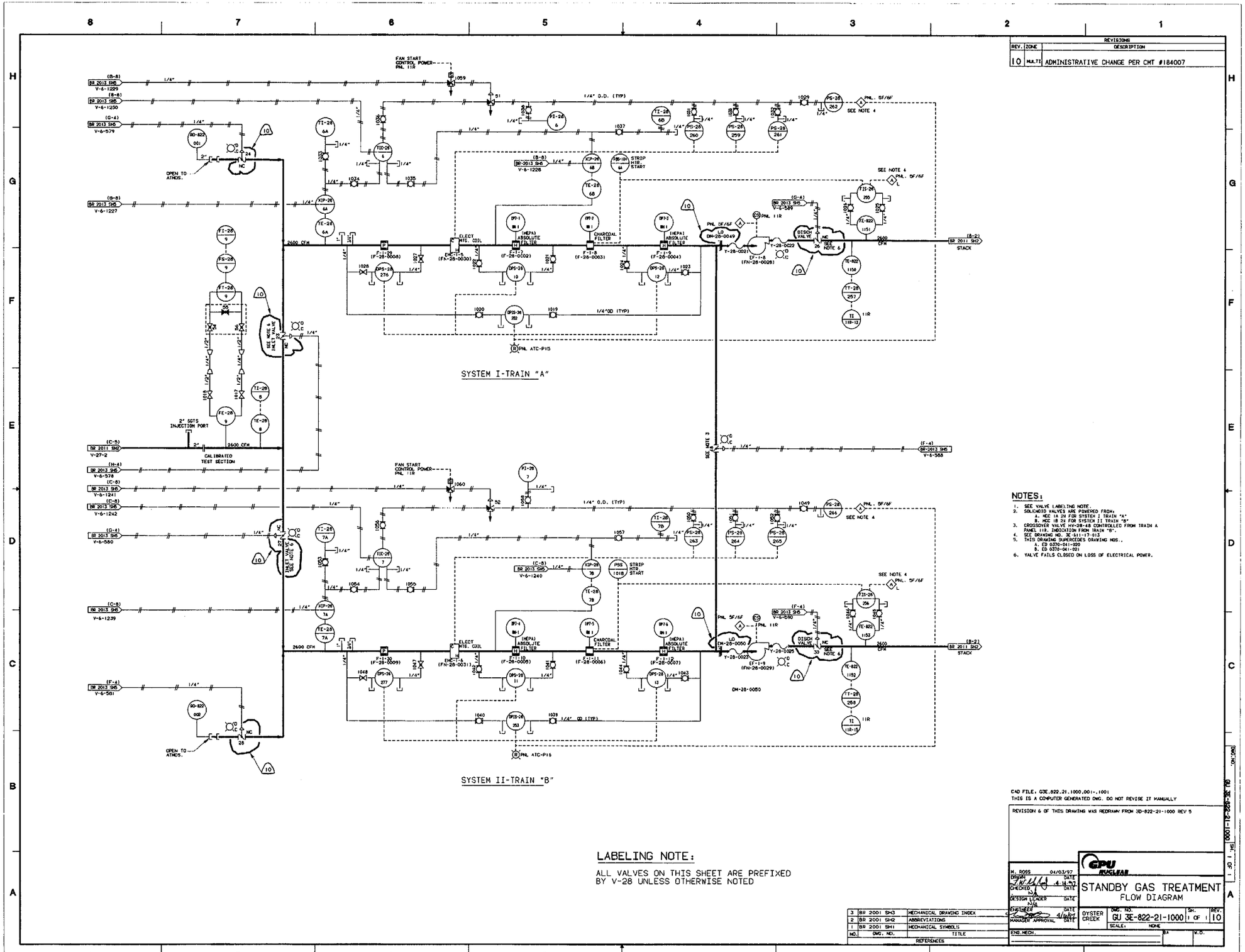

REVISIONS		
REV.	ZONE	DESCRIPTION
10	MULTI	ADMINISTRATIVE CHANGE PER CMT #184007

NOTES:

1. SEE VALVE LABELING NOTE.
2. SOLENOID VALVES ARE POWERED FROM:
   A. MCC 1A 24 FOR SYSTEM I TRAIN "A"
   B. MCC 1B 24 FOR SYSTEM II TRAIN "B"
3. CROSSOVER VALVE HV-28-48 CONTROLLED FROM TRAIN A PANEL 11R. INDICATION FROM TRAIN "B".
4. SEE DRAWING NO. 3E-611-17-013
5. THIS DRAWING SUPERCEDES DRAWING NOS.,
   A. ED 0370-041-020
   B. ED 0370-041-021
6. VALVE FAILS CLOSED ON LOSS OF ELECTRICAL POWER.

CAD FILE: G3E.822.21.1000.001-.1001
THIS IS A COMPUTER GENERATED DWG. DO NOT REVISE IT MANUALLY

REVISION 6 OF THIS DRAWING WAS REDRAWN FROM 3D-822-21-1000 REV 5

LABELING NOTE:

ALL VALVES ON THIS SHEET ARE PREFIXED BY V-28 UNLESS OTHERWISE NOTED

NO.	DWG. NO.	TITLE
3	BR 2001 SH3	MECHANICAL DRAWING INDEX
2	BR 2001 SH2	ABBREVIATIONS
1	BR 2001 SH1	MECHANICAL SYMBOLS

REFERENCES

M. ROSS 04/03/97
DRAWN DATE
CHECKED DATE
DESIGN LEADER DATE
ENGINEER DATE
MANAGER APPROVAL DATE

GPU NUCLEAR

STANDBY GAS TREATMENT
FLOW DIAGRAM

OYSTER CREEK

DWG. NO. GU 3E-822-21-1000 | SH. 1 OF 1 | REV. 10

SCALE: NONE

END. MECH. | BA | W.O.

DWG. NO. GU 3E-822-21-1000 SH. 1 OF 1

REVISIONS		
REV.	ZONE	DESCRIPTION
20	E-3	ECDC307407

P1-39 701
ST-862 2
LI-39 703
130 GAL. FUEL DAY TANK T-39-3
FUEL PUMP P-39-17
FUEL PUMP P-39-13
FUEL PUMP P-39-14
P1 862 3
FUTURE CONN. V-657-25
V-657-19
V-657-23
V-657-21
V-657-22
FUTURE CONN.
3/4"DR.
V-36-47
TANK CELL D.G. #1
2"-150-11(OCF0)
1"-150-11(OCF0)
1 1/2"-150-11(OCF0)
2 1/2"-150-12(OCD0)
(8-2) GR-2015 SH.5 V-36-46
P.G. BLDG. YARD
TANK VAULT OUTSIDE
VENT W/ FLAME ARRESTOR
20" MANWAY
LI-39 705
DIESEL GENERATOR FUEL OIL TANK (15000 GAL) T-39-2
3/4" TEST CONN.
TANK CELL & YARD FD#3
(8-2) GR-2015 SH.5 V-36-19
2" CAP
YARD TANK VAULT
RUBBER TUBING
DIESEL TANK VAULT SUMP P-39-27
1" 1 1/4" FILL LINE
1/4" (TYP)
2" VENT
2" OVERFLOW
COLLECTION TANK T-39-1
LI-862 4
1/2" TANK DRAIN
1/2"(TYP)
CONCRETE CONTAINMENT
DRAIN
P1-39 702
ST-862 15
V-657-43
130 GAL. FUEL DAY TANK T-39-4
FUEL PUMP P-39-18
FUEL PUMP P-39-15
FUEL PUMP P-39-16
P1 862 4
FUTURE CONN. V-657-51
V-657-45
V-657-49
V-657-47
V-657-48
3/4"DRAIN
V-36-48
TANK CELL D.G. #2

LABELLING NOTE:
ALL VALVES ON THIS SHEET ARE PREFIXED V-39 UNLESS OTHERWISE NOTED.

NO.	DWG. NO.	TITLE
10	JC 19612	EMERGENCY DIESEL GENERATOR FUEL OIL SUPPLY LINE KD.
9	LJ-9789	DIESEL OIL STORAGE TANK NO.5
8	BR-4020	EMERG. DIESEL GENERATOR VAULT
7	3E-861-21-1001 SH1	EMERGENCY DIESEL GENERATOR WATER COOLING SYS. F.D.
6	3E-861-21-1002 SH1	EMERGENCY DIESEL GENERATOR LUBE OIL F.D.
5	3E-861-21-1000 SH1	EMERGENCY DIESEL GENERATOR AIR COOLING SYS. F.D.
4	BR-2015 SH2	MAIN FUEL OIL STORAGE & TRANSFER F.D.
3	BR-2001 SH2	MECHANICAL DRAWING INDEX
2	BR-2001 SH2	ABBREVIATIONS
1	BR-2001 SH1	MECHANICAL SYMBOLS
NO.	DWG. NO.	TITLE
		REFERENCES

CAD FILE: 03E.862.21.1000.001-.2001
THIS IS A COMPUTER GENERATED DWG. DO NOT REVISE IT MANUALLY

REVISION 7 OF THIS DRAWING WAS REDRAWN FROM 3D-862-21-1000. REV. 3.

DESIGN LEADER	DATE	
ENGINEER	DATE	
MANAGER APPROVAL	DATE	1-28-98

GPU NUCLEAR

EMERGENCY DIESEL GENERATOR DIESEL FUEL OIL STOR. & TRANS. SYS. FLOW DIAGRAM

OYSTER CREEK	DWG. NO.	SH.	REV.
	3E-862-21-1000	1 OF 1	20
	SCALE: NONE		
ENG. MECH.		BA	W.O.

3E-862-21-1000 SH. 1 REV. 20

CADD FILE: 03E862A01 DWG: 21-1000 CHKED=03E21100A01-1001
ASSEMBLY
PLOT: 1:1

REVISIONS		
REV	ZONE	DESCRIPTION
50	B-15	ECO#3-14-876

PRETREATMENT TRAILER

DEMINERALIZER TRAILER

TO SINK

DEMINERALIZER RESIN BOTTLES (PORTABLE)

CLEAN LAB

PRETREATMENT BLDG.

HOT WATER HEATER H-10-1

H.C. TO CHEMICAL ADDITION TANK (T-10-23) FILL

PRETREATMENT BLDG.

DEEP WELL PUMPS P-10-3 P-10-4

WATER WELL PIT

ABANDONED IN PLACE

CARBON FILTER T-10-1 (1-1)

CARBON FILTER T-10-2 (1-2)

CARBON FILTER T-10-3 (1-3)

DWG. ARCHIVED

CLEARWELL TANK T-10-14

SYNCHRONATIC FILTER T-10-5A

SYNCHRONATIC FILTER T-10-5B

HEAD DIVIDING BOX Y-10-6

AIR SEPARATOR T-10-8B

TURBINE BUILDING

TO TR-10 (WTR. CONDITIONING CONTROL PANEL)

FLOW OUTLET MIXED BED FT-10

PRETREATMENT BLDG.

HARDCOAL FILTER BACKWASH TERMINATION PIT

SLUDGE SUMP PIT

P-10-2B (1-2)

P-10-2A (1-1)

TYCON DURING DRAINS TO VALVE PIT

P-10-1A (1-1) FILTERED WATER PUMP

P-10-1B (1-2) FILTERED WATER PUMP

P-10-1C (1-3) FILTERED WATER PUMP

T.B. BASEMENT EL. 3'-6"

5000 GALLON DOMESTIC WATER STORAGE TANK T-10-4

SEE DR-2199 FOR FLOOR DRAINS

EMERG. SHOWER ASSEMBLY

TO EYEWASH

INJECTION PUMP P-10-30

CHEMICAL ADDITION TANK (T-10-23)

MIXER MTR-871-1

PRE-TREATMENT BLDG BURIED

TO AOB

TO OCAB

DOM WATER SYS TO SITE EMERG BLDG

BURIED

SITE EMERG BLDG

WATER STORAGE TANK T-10-19

P-10-26

P-10-27

SITE EMERG BLDG DOMESTIC WATER BOOSTER PUMPS

FROM SEB REST RM AND UTILITY CLOSETS

TO SEB REST RM AND UTILITY CLOSETS

TO SEB AC ROOM

P-10-2B

HOT WATER HTR H-10-4

SITE EMERG BLDG

(COMPUTER ROOM A.C. UNITS)

M-843-4 (AC-1)

M-843-9 (AC-6)

M-843-6 (AC-3)

M-843-5 (AC-2)

M-843-8 (AC-5)

M-843-7 (AC-4)

CONTROL PANEL (P-2) STRT-752-7 SEE DWG SS-4903 SH C-7

CONTROL PANEL (P-2) STRT-752-8 SEE DWG SS-4903 SH C-7

NOTES:

1. SEE VALVE LABELING NOTE.
3. CONTROL AIR NOT HOOKED UP.
4. MARKED NOT USED.
5. SOLUTION PUMP CL-P-108 OUT OF SERVICE.
6. WATER COOLER REMOVED AT EL. 23'-8".
7. WATER COOLER REMOVED.
8. VALVE SHUT-OFF AND ABANDONED WITH MONUMENT MARKER AT GRADE "(ZONE B-3) ISOLATION VALVE FOR ABANDONED DOMESTIC 2" PVC LINE.
11. ELEVATED DOMESTIC WATER TANK WAS REMOVED.
12. PUMP P-10-25 STARTS ON DEEPWELL PUMP "RUNNING" SIGNAL AND STOPS ON DEEPWELL PUMP "OFF" SIGNAL.
13. DEEPWELL PUMP P-10-24 STARTS ON "LOW LEVEL" AND STOPS ON "HIGH LEVEL" IN TANK T-10-15
14. MOTOR OPERATED VALVE V-10-529 CLOSES ON LOW LEVEL IN TANK T-10-15
15. FOR PIPE SPECIFICATION AND PIPE CLASS BREAKS SEE STONE AND WEBSTER SPEC. NO.10030.80-1001.
16. BURIED PIPING CL 35W UNLESS OTHERWISE NOTED.
17. NUMBERS IN PARENTHESES (XX) ARE FOR ORIGINAL EQUIPMENT TAG NUMBERS AND TO BE USED FOR REFERENCE ONLY.

LABELING NOTE

ALL VALVES ON THIS SHEET ARE PREFIXED V-10 UNLESS OTHERWISE NOTED.

CAD FILE NAME: GU 3E-871-21-1000 S1 R50

REVISION 22 OF THIS DRAWING WAS REDRAWN FROM PART OF 3E-871-21-1000 SH1 REVIS

REVISION 44 OF THIS DRAWING WAS TRANSLATED TO AUTOCAD FROM CADAM FILE:GUE_871_21_1000_001-1.40P

THIS IS A COMPUTER GENERATED DRAWING DO NOT REVISE IT MANUALLY

DRAWN	BJK	
REVIEWED A CARLSON	12-17-98	
DESIGN	BJK	
M. STOKO	12-17-98	
ENGINEER		
PROJECT ENGINEER	N. ZAYAS	
DRAWING MANAGER	BJK	

GPU NUCLEAR

DOMESTIC WATER AND PRETREATMENT SYSTEM FLOW DIAGRAM

OYSTER CREEK

DWG. NO. GU 3E-871-21-1000

SH. 1 OF 3

REV. 50

SCALE: NONE

PIMS # N/A

NO.	DWG. NO.	TITLE
REFERENCES		

GU 3E-871-21-1000 SH 1

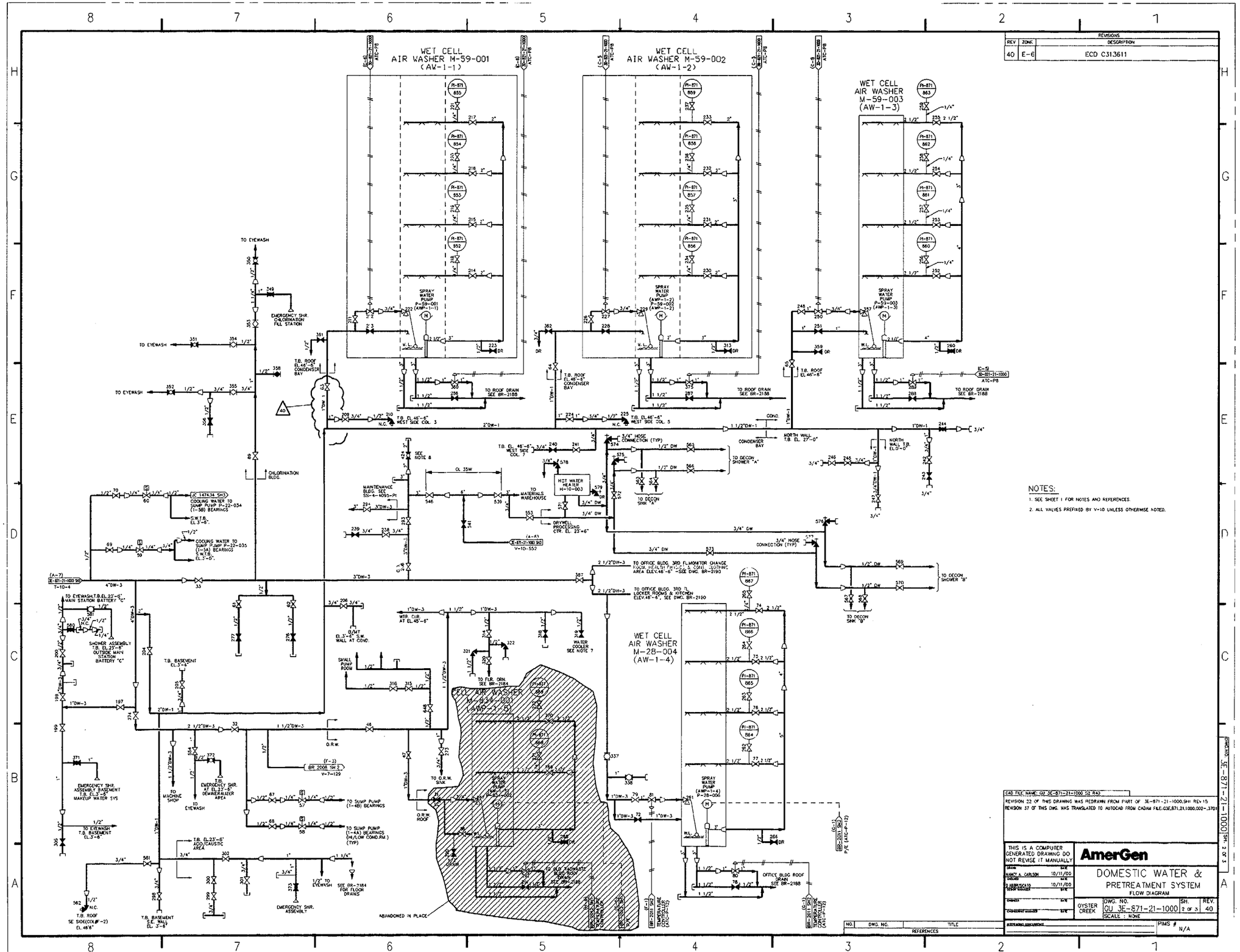

NOTES:

1. SEE SHEET 1 FOR NOTES AND REFERENCES.
2. ALL VALVES PREFIXED BY V-10 UNLESS OTHERWISE NOTED.

REV	ZONE	REVISIONS DESCRIPTION
40	E-6	ECD C313611

CAD FILE NAME: GU 3E-871-21-1000 S2 R40

REVISION 22 OF THIS DRAWING WAS REDRAWN FROM PART OF 3E-871-21-1000,SH1 REV 15

REVISION 37 OF THIS DWG. WAS TRANSLATED TO AUTOCAD FROM CADAM FILE:G3E,871,21,1000,002-,3701

THIS IS A COMPUTER GENERATED DRAWING DO NOT REVISE IT MANUALLY

DRAWN		DATE
NANCY A. CARLSON		10/11/00
CHECKED		DATE
D.ABBRUSCATO		10/11/00
DESIGN MANAGER		DATE
CHECKER		DATE
ENGINEERING MANAGER		DATE

AmerGen

DOMESTIC WATER & PRETREATMENT SYSTEM

FLOW DIAGRAM

OYSTER CREEK

DWG. NO. GU 3E-871-21-1000 | SH. 2 OF 3 | REV. 40

SCALE : NONE

PIMS # N/A

NO.	DWG. NO.	TITLE
REFERENCES		

DWG.NO. 3E-871-21-1000 SH. 2 OF 3

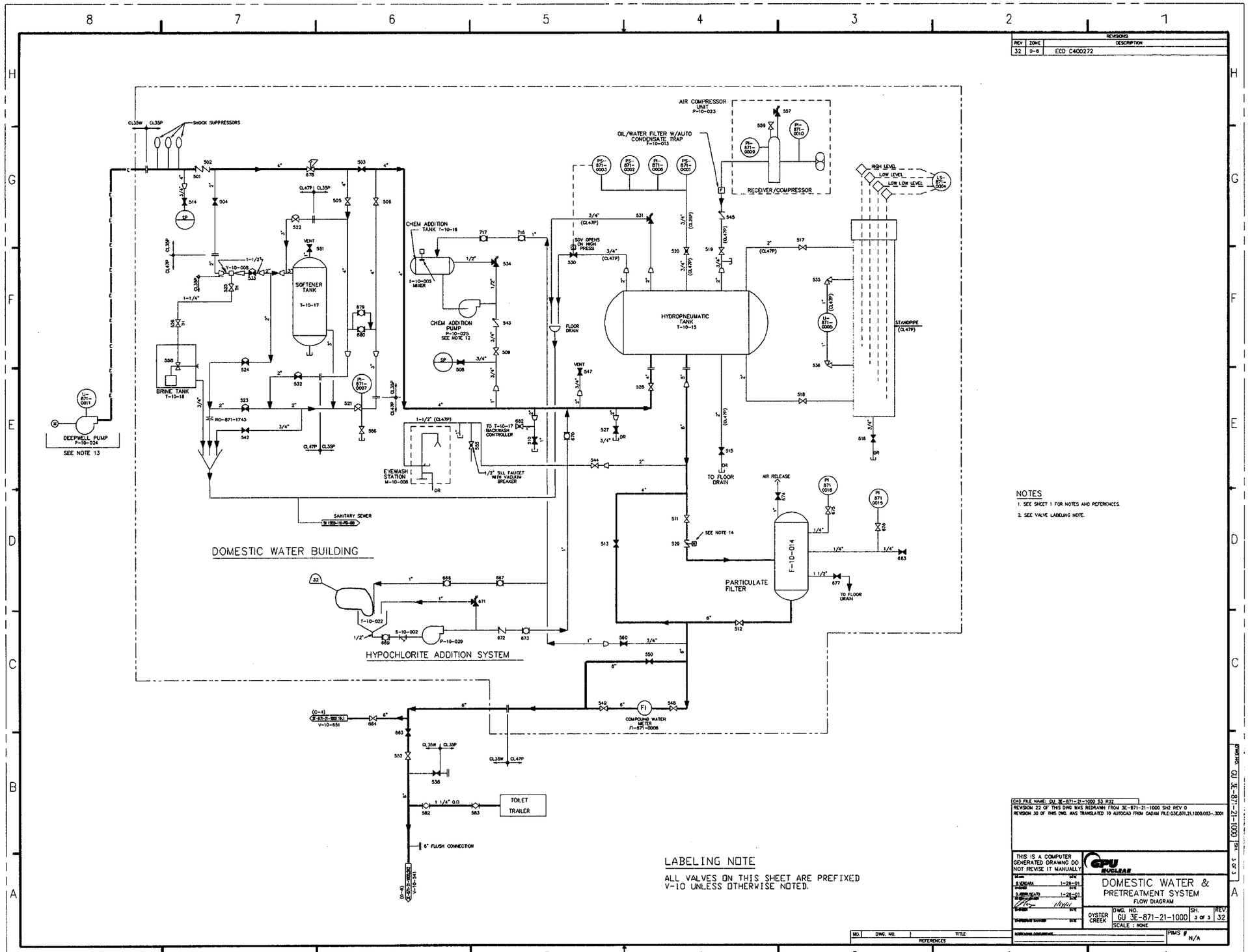

NOTES

1. SEE SHEET 1 FOR NOTES AND REFERENCES.
2. SEE VALVE LABELING NOTE.

LABELING NOTE

ALL VALVES ON THIS SHEET ARE PREFIXED V-10 UNLESS OTHERWISE NOTED.

CAD FILE NAME: GU 3E-871-21-1000 S3 R32
REVISION 22 OF THIS DWG WAS REDRAWN FROM 3E-871-21-1000 SH2 REV 0
REVISION 30 OF THIS DWG. WAS TRANSLATED TO AUTOCAD FROM CADAM FILE:G3E,871,21,1000,003-,3001

THIS IS A COMPUTER GENERATED DRAWING DO NOT REVISE IT MANUALLY

GPU NUCLEAR

DOMESTIC WATER & PRETREATMENT SYSTEM
FLOW DIAGRAM

OYSTER CREEK | DWG. NO. GU 3E-871-21-1000 | SH. 3 OF 3 | REV. 32
SCALE : NONE
PIMS # N/A

NO. | DWG. NO. | TITLE
REFERENCES

DWG. NO. GU 3E-871-21-1000 SH. 3 OF 3

PLANT NORTH

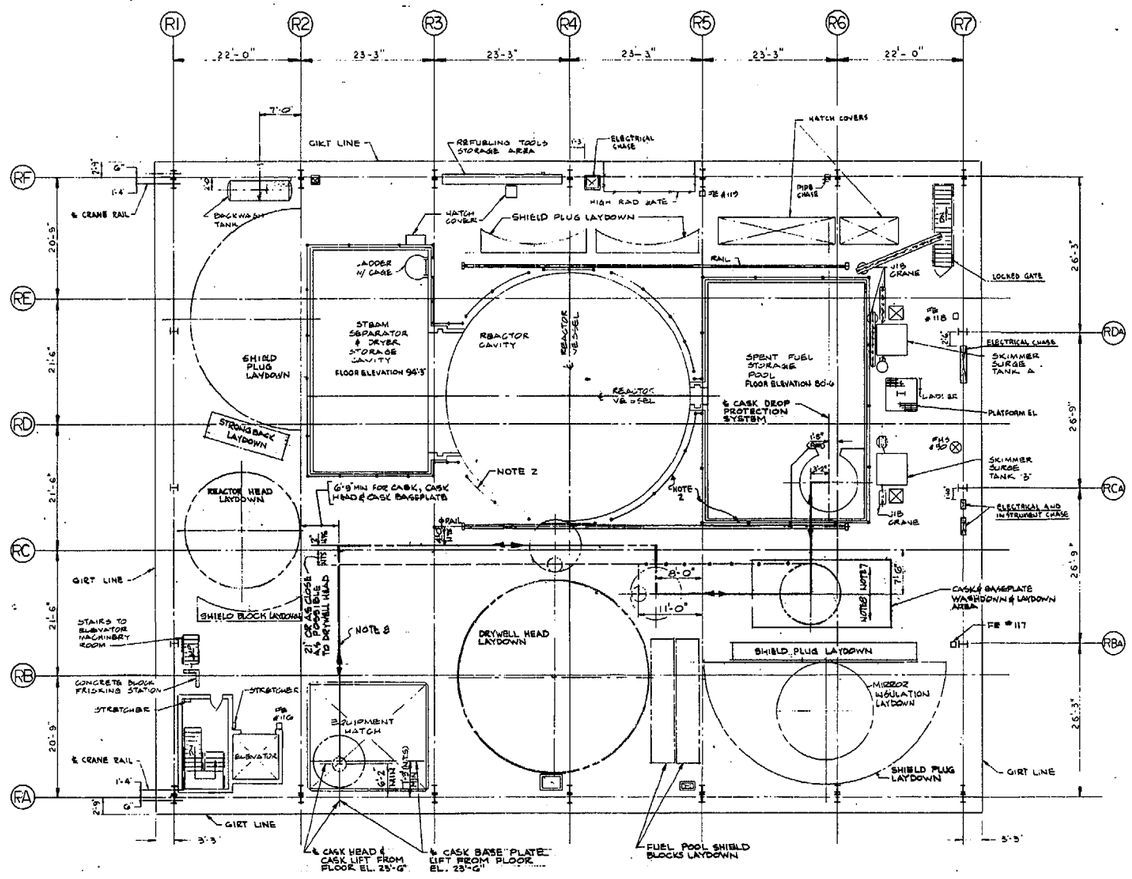

PLAN ELEV 119'-3"

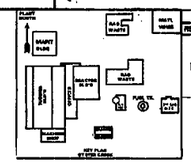

REV.	ZONE	DESCRIPTION					
		DRAWN	CHECKED	DSGN. LDR.	ENGINEER	MANAGER	DATE
1	AS NOTED	PER DCN COOTI&G DATED 4-10-84 + EEVI&E21 CA&K PATH AND RELATED NOTES (G7, &7 TO &8) NOTES (N1 TO D1) LAYDOWN AREAS (THROUGHOUT) ADDED; DIM (D8, &G)					
		A. BOMBICO	N. TITOLO				4-18-84

NOTES:
1. MAXIMUM LIFT HEIGHTS FOR TRANSFERAL OF CASK HEAD, CASK & BASE PLATE ABOVE FLOOR EL. 119'3"
   - A. CASK OVER WASHDOWN AREA DURING BASE & INSTALLATION 12'
   - B. CASK WITH BASE OVER CASK DROP PROTECTION SYSTEM 6'
   - C. CASK OVER OPERATING FL. FROM HATCH TO WASHDOWN AREA 6'
   - D. CASK BASE & FROM HATCH TO WASHDOWN AREA 3'
   - E. CASK HEAD OVER FLOOR FROM HATCH TO WASHDOWN AREA 6' (THE LIFT HEIGHT DURING CASK HEAD INSTALLATION WILL BE EXCEEDED)
2. REMOVE HANDRAIL WHERE REQUIRED
3. PARTS STORED ALONG PREFERRED PATH FOR CASK, CASK HEAD AND CASK BASE & WILL BE REMOVED TO OTHER LOCATIONS.
4. THIS DRAWING TO BE USED WITH DRYWELL HEAD IN LAYDOWN STORAGE POSITION ONLY
5. CASK, CASKHEAD & CASK BASE & PREFERRED PATH WILL BE SHOWN AS FOLLOWS:
   - ——— : CASK, CASK HEAD & CASK BASE & COMMON PATH
   - – – – : CASK & CASKHEAD
   - —•—•—•— : CASK HEAD OPTIONAL PATH
   - — — — : CASK BASE &
6. LAYDOWN AREAS SHOWN, ARE THE LATEST AS OF 5-9-84, BUT MAY VARY TO ACCOMODATE EQUIPMENT HANDLING.
7. CASK PATH ESTABLISHED BY M.P.R. INC. ANALYSIS
8. CASK PATH ESTABLISHED BY GPUN SAFETY EVALUATION SE 82-328041-002 REV 1

1 IN. 1 CM.

NO. | DWG. NO. | TITLE — REFERENCES

SEISMIC CLASS S-I
IMPORTANT TO SAFETY
INTERIM DRAWING

V. P BRIKE	3-5-84	GPU Nuclear
DRAWN: N. TITOLO	3-12-84	RADWASTE CASK FSV-1
CHECKED: D.	3/14/84	SAFE LOAD PATH
DESIGN LEADER	3/14/84	REACTOR BLDG PLAN FLR ELEV. 119'-3"
ENGINEER	DATE	DWG. NO. 3E-882-06-001 REV. 1
MANAGER APPROVAL	4/20/84 DATE	OYSTER CREEK SCALE: 1/8" = 1'-0"
ENG. MECH.		AUTHORIZATION NO. 328041

3E-882-06-001

PLANT NORTH

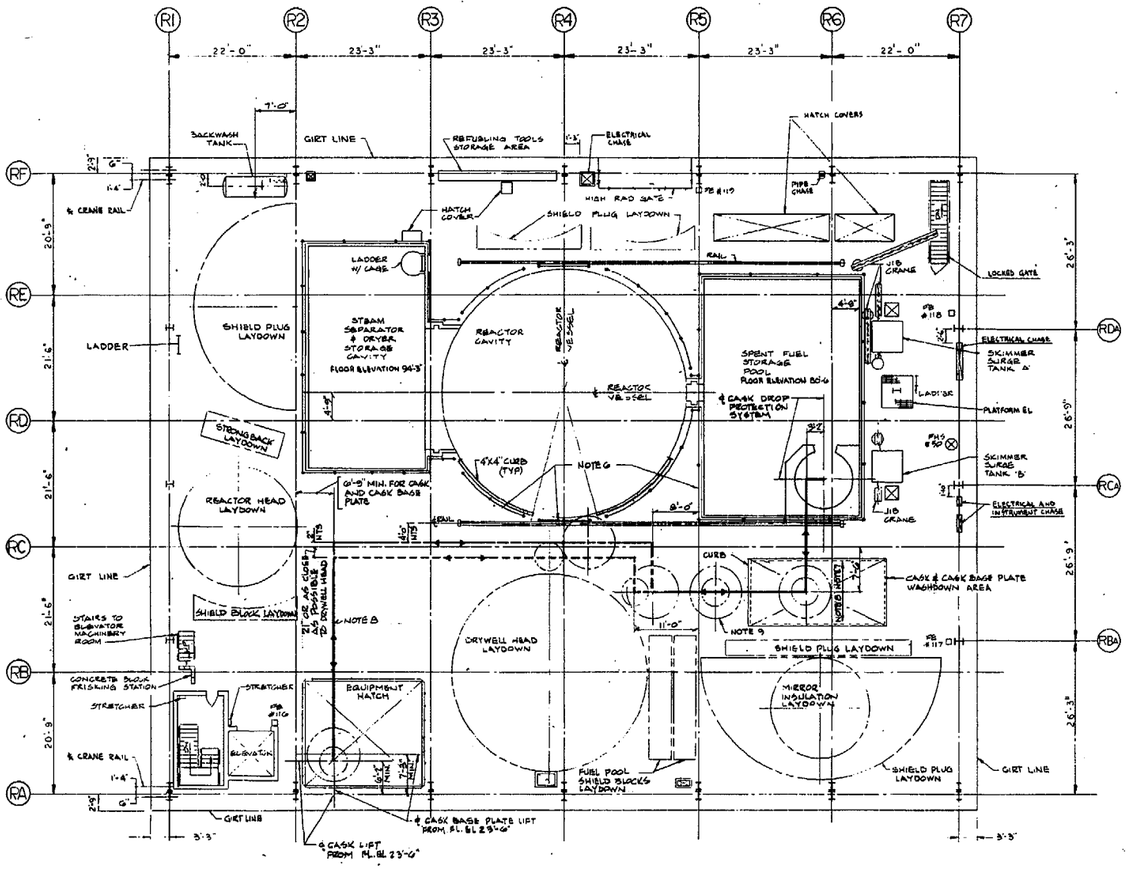

PLAN ELEV 119'-3"

NOTES:

1. MAXIMUM LIFT HEIGHTS FOR TRANSFERAL OF CASK & BASE PLATE ABOVE FLOOR EL 119'-3":
   - A. CASK OVER WASHDOWN AREA DURING BASE PLATE INSTALLATION 28"
   - B. CASK & BASE PLATE OVER FLOOR 8"
   - C. CASK OVER CASK DROP PROTECTION SYSTEM 6"
   - D. CASK WITHOUT STATIC ELIMINATOR STRAPS OVER FLOOR 6"
   - E. CASK WITH BASEPLATE BETWEEN WASHDOWN AND CASK DROP PROTECTION SYSTEM OVERFLOOR 12"
2. PARTS STORED ALONG PREFERRED PATH FOR CASK & CASK BASE PLATE WILL BE REMOVED TO OTHER LOCATIONS
3. LAYDOWN AREAS AS FOUND 3-16-84, MAY VARY TO ACCOMODATE BOLUP HOLDING
4. THIS DWG TO BE USED WITH DRYWELL HEAD IN STORAGE POSITION ONLY
5. CASK & CASK BASE PLATE PREFERRED PATH WILL BE SHOWN AS FOLLOWS
   - ———— : CASK & CASK BASE PLATE, COMMON PATH
   - – – – – : CASK ONLY
   - — — — : CASK BASE PLATE ONLY
6. REMOVE HANDRAIL WHERE REQUIRED
7. CASK PATH ESTABLISHED BY MPR INC. ANA-Y416
8. CASK PATH ESTABLISHED BY GPUN SAFETY EVALUATION 88 OC 88041-002
9. CASK & CASK BASE PLATE ASSEMBLY AREA

REVISIONS

REV.	ZONE	DESCRIPTION

SEISMIC CLASS S-I
IMPORTANT TO SAFETY
INTERIM DRAWING

DRAWN	N. TITOLO	3-26-84 DATE
CHECKED	B. ALDRICH	3-27-84 DATE
DESIGN LEADER		3/4/84 DATE
ENGINEER		3-29-84 DATE
MANAGER APPROVAL		3/29/84 DATE

GPU Nuclear

RADWASTE CASK VNDB 355
SAFE LOAD PATH
REACTOR BLDG PLAN FL ELEV. 119'-3"

OYSTER CREEK

DWG NO. 3E-882-06-002 REV. 0

SCALE: 1/8" = 1'-0"

ENG. MECH.

AUTHORIZATION NO. 328041

NO.	DWG. NO.	TITLE

REFERENCES

DWG NO. 3E-882-06-002

1 IN. 1 CM.

REVISIONS		
REV.	ZONE	DESCRIPTION
37	00/7	ADMINISTRATIVE CHANGE PER CMT 183314

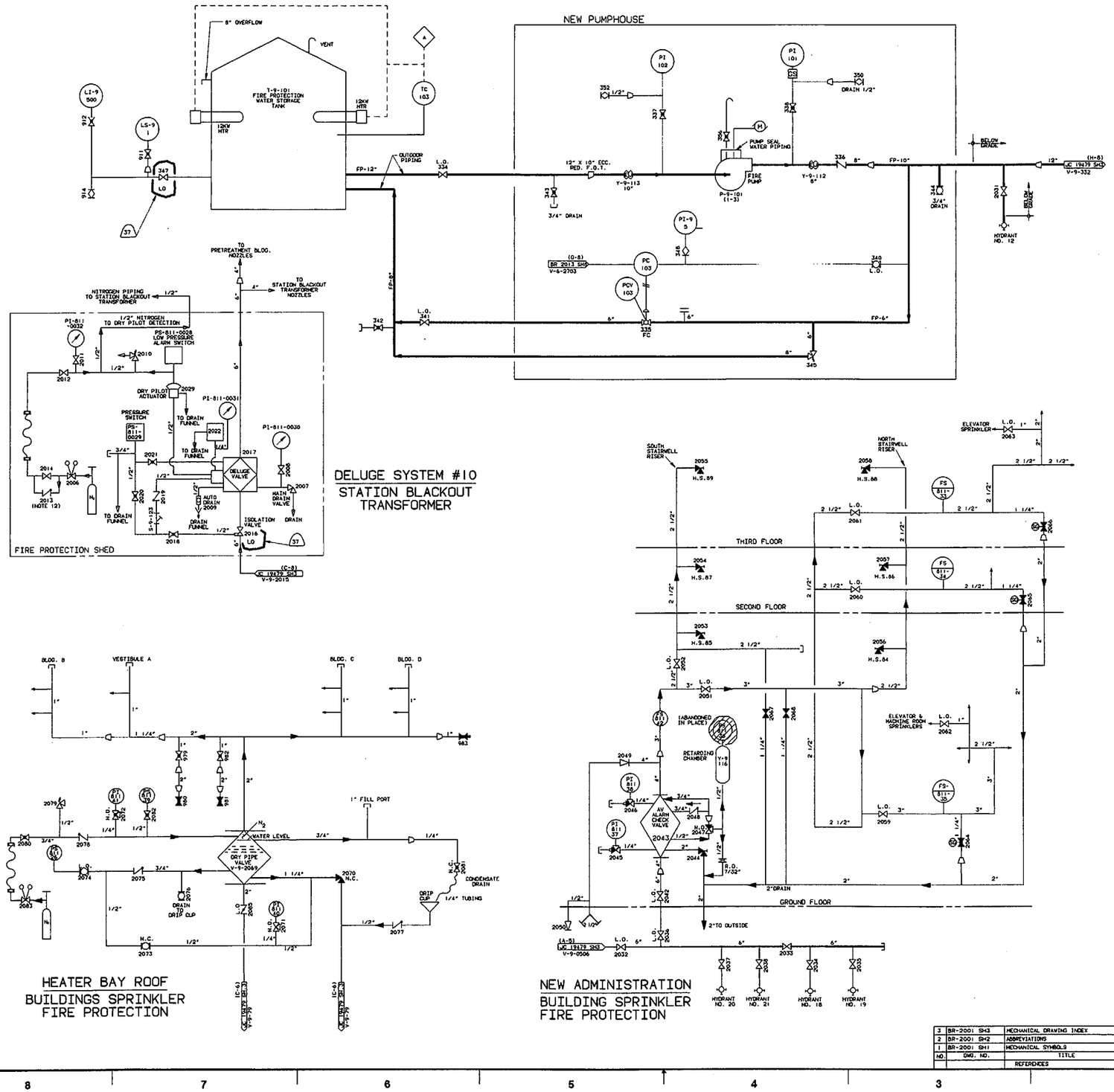

NOTES:

1. SEE LABELLING NOTE.
2. OUTDOOR PIPING WILL BE ELECTRICALLY HEAT TRACED AND INSULATED.
3. SEE DWG. JC 19479 SH2 FOR LOCATION & DETAILS OF DELUGE SYSTEM MULTIMATIC VALVE ASSEMBLIES.
4. SEE DWG. JC 19479 SH2 FOR LOCATION & DETAILS OF FLOW ALARM VALVES.
5. SEE DWG. JC 19479 SH2 FOR LOCATION & DETAILS OF FLOW ALARM VALVES AND FOR BRANCH PIPING AND NOZZLE LOCATIONS, SEE REFERENCE DRAWINGS KELLENY ASSOC.-80725P-1 & 80725P-2.
6. SEE DWG. JC 19479 SH2 FOR LIST OF ISOLATION VALVES AND LOCATIONS OF ALL HOSE STATIONS (H.S.)
7. SEE DWG. JC 19479 SH2 FOR A LIST OF AREAS PROTECTED AND REFERENCE DRAWINGS FOR SPRINKLER SYSTEMS.
8. SPRINKLER SYSTEMS ARE ITS UNLESS OTHERWISE NOTED.
9. V-9-27 & V-9-333 ARE INACCESSABLE. LEFT IN OPEN POSITION & BURIED UNDER AIR RESPIRATOR FACILITY PER FCN 094076.
10. INSPECTORS TEST VALVES ARE SHOWN FOR INFORMATION ONLY AND ARE NOT SHOWN REPRESENTING THE CORRECT PROCESS LOCATION. INSPECTORS TEST CONNECTIONS ARE LOCATED DOWNSTREAM AND REMOTE FROM THE SPRINKLER ALARM CHECK VALVES.
11. RESTRICTING ORIFICE IS AN INTEGRAL PART OF DELUGE VALVE.
12. RESTRICTOR CHECK VALVE WITH 1/8" ORFICE.

LABELLING NOTE:

ALL VALVES ON THIS SHEET ARE PREFIXED V-9 UNLESS OTHERWISE NOTED.

CAD FILE: V3E.811.21.0100.001-.3701
THIS IS A COMPUTER GENERATED DWG. DO NOT REVISE IT MANUALLY

REVISION 24 OF THIS DRAWING WAS REDRAWN FROM SH 13432.02-M-01 REV 13

NO.	DWG. NO.	TITLE
3	BR-2001 SH3	MECHANICAL DRAWING INDEX
2	BR-2001 SH2	ABBREVIATIONS
1	BR-2001 SH1	MECHANICAL SYMBOLS
		REFERENCES

T.W.USZKO,JR. 5/20/97 DRAWN DATE
CHECKED DATE
DESIGN LEADER DATE
ENGINEER DATE
MANAGER APPROVAL DATE

GPU NUCLEAR

FIRE PROTECTION WATER SYSTEM FLOW DIAGRAM

OYSTER CREEK | DWG. NO. JC 19479 | SH. 1 OF 4 | REV. 37 | SCALE: NONE | ENG. MECH. | BA | W.O.

JC 19479 SH1 REV 37

HOSE STATIONS

HOSE STATION NO.	ISOLATION VALVE NO.	LOCATION
1	V-9-101	MACHINE SHOP – SOUTH WALL
2	V-9-102	OLD Q.A. STOREROOM – EAST WALL
3	V-9-103	TURBINE BLDG.BASEMENT NORTH OF HYDROGEN SEAL OIL UNIT
4	V-9-104	TURBINE BLDG. BASEMENT BY STATOR COOLING UNIT
5	V-9-105	TURBINE BLDG. BASEMENT OUTSIDE S.J.A.E DOOR
6	V-9-106	TURBINE BLDG. FEED PUMP ROOM – EAST WALL
7	V-9-107	TURBINE BLDG. FEED PUMP ROOM – WEST WALL
8	V-9-108	TURBINE OIL TANK – NORTH EAST WALL
9	V-9-109	TURBINE OIL TANK – NORTH WEST WALL
10	V-9-110	CONDENSER BAY – EAST BY "A" CONDENSER
11	V-9-111	CONDENSER BAY – WEST BY "A" CONDENSER
12	V-9-112	CONDENSER BAY – WEST BY "C" CONDENSER
13	V-9-113	CONDENSER BAY – EAST BY "C" CONDENSER
14	V-9-114	TURBINE OPERATING FLOOR – EAST WALL BY OVERHEAD DOOR
15	V-9-115	TURBINE OPERATING FLOOR – EAST WALL BY "C" HOOD
16	V-9-116	TURBINE OPERATING FLOOR – EAST WALL BY "A" HOOD
17	V-9-117	TURBINE OPERATING FLOOR – NORTH WALL
18	V-9-118	TURBINE OPERATING FLOOR – WEST WALL BY "A" HOOD
19	V-9-119	TURBINE OPERATING FLOOR – WEST WALL BY "B" HOOD
20	V-9-120	TURBINE OPERATING FLOOR – WEST WALL BY LIFT PUMPS
21	V-9-121	OFFICE BUILDING – THIRD FLOOR BY LUNCH ROOM
22	V-9-122	OFFICE BUILDING – SECOND FLOOR BY NORTH STAIRWELL
23	V-9-123	AUX. BOILER HOUSE – SOUTHEAST CORNER
24	V-9-124	OLD WAREHOUSE – NORTH WALL
25	V-9-125	OLD WAREHOUSE – SOUTH WALL
26	V-9-128	AOG BUILDING – SECOND FLOOR S.W. CORNER
27	V-9-239	FEEDWATER HEATER BAY – WEST
28	V-9-240	FEEDWATER HEATER BAY – EAST
29	V-9-241	REACTOR BLDG. 23' NE
30	V-9-242	REACTOR BLDG. 23' NW
31	V-9-243	REACTOR BLDG. 23' SE
32	V-9-244	REACTOR BLDG. 23' SW
33	V-9-245	REACTOR BLDG. 23' OUTSIDE DRYWELL AIRLOCK
34	V-9-246	REACTOR BLDG. –1'11" NW (CRD PUMP ROOM)
35	V-9-247	REACTOR BLDG. –8'5" SW (RBEDT)
36	V-9-248	REACTOR BLDG. –19' NE
37	V-9-249	REACTOR BLDG. –19' SE
38	V-9-250	REACTOR BLDG. 51' NE
39	V-9-251	REACTOR BLDG. 51' NW
40	V-9-252	REACTOR BLDG. 51' SE
41	V-9-253	REACTOR BLDG. 51' SW
42	V-9-254	REACTOR BLDG. 75' NE
43	V-9-255	REACTOR BLDG. 75' NW
44	V-9-256	REACTOR BLDG. 75' SE
45	V-9-257	REACTOR BLDG. 75' SW
46	V-9-258	REACTOR BLDG. 95' NE
47	V-9-259	REACTOR BLDG. 95' NW
48	V-9-260	REACTOR BLDG. 95' SE
49	V-9-261	REACTOR BLDG. 95' SW
50	V-9-262	REACTOR BLDG. 119' N
51	V-9-263	REACTOR BLDG. 119' S
52	V-9-264	OUTSIDE CABLE SPREADING ROOM
53	V-9-265	OUTSIDE CONTROL ROOM
54	V-9-266	OUTSIDE CHEM. LAB & LAUNDRY ROOM
55	V-9-267	TURBINE BLDG. BASEMENT NEAR COND. BAY SOUTH DOOR
56	V-9-282	NEW WAREHOUSE -- CENTER NORTH WALL
57	V-9-283	NEW WAREHOUSE -- NE CORNER
58	V-9-284	NEW WAREHOUSE -- CENTER EAST WALL
59	V-9-285	NEW WAREHOUSE -- NEAR WEST WALL ROLL-UP DOOR
60	V-9-286	NEW WAREHOUSE -- SW CORNER
61	V-9-287	NEW WAREHOUSE -- NORTH NEAR ROLL-UP DOOR
62	V-9-288	NEW WAREHOUSE -- SECOND FLOOR
63	V-9-475	OUTSIDE CABLE TO NCSR.
64	V-9-474	CABLE BRIDGE TUNNEL
65	V-9-497	SITE EMERG. BLDG. S.W CORRIDOR FIRST FLOOR
66	V-9-485	SITE EMERG. BLDG. N.E. ENTRANCE FIRST FLOOR
67	V-9-499	SITE EMERG. BLDG. N.E. STAIRWELL SECOND FLOOR
68	V-9-501	SITE EMERG. BLDG. S.W. STAIRWELL SECOND FLOOR
69	V-9-417	LLRADWASTE STOR. FACILITY CORR. N. WALL EL.101'-0"
70	V-9-418	LLRADWASTE STOR. FACILITY E.WALL(MECH) ELECT. EQUIP.RM.EL.118'-6"
71	V-9-419	LL RADWASTE STORAGE FACILITY S.W. WALL CELL STORAGE AREA EL.129'-0"
72	V-9-420	LL RADWASTE STOR. FACILITY S.E. WALL CELL STORAGE AREA EL.129'-0"
73	V-9-421	LL RADWASTE STORAGE FACILITY S.E. WALL TRUCK BAY EL.105'-0"
74	V-9-422	LL RADWASTE STORAGE FACILITY
77	V-9-425	LL RADWASTE STOR. FACILITY N.E. WALL CELL STORAGE AREA EL.129'-0"
80	V-9-428	LL RADWASTE STOR. FACILITY S. WALL O.A.W. STORAGE AREA EL.104'-6"
81	V-9-429	LL RADWASTE STOR. FACILITY E. WALL O.A.W COMPACTION EL. 105'-0"
82	V-9-430	LL RADWASTE STORAGE FACILITY E. WALL O.A.W. STORAGE AREA EL.104'-6"
83	V-9-431	LL RADWASTE STOR. FACILITY W. WALL O.A.W. STORAGE AREA EL.104'-6"
88	V-9-1062 THRU V-9-1067	FRESH WATER PUMP HOUSE

DELUGE VALVE ASSEMBLY

FOR DELUGE SYSTEM	SYSTEM # 5	SYSTEM # 6	SYSTEM # 7	SYSTEM # 8
LOCATION OF ASSEMBLY	RX BLDG 51'3" EL. NORTH	RX BLDG 51'3" EL. SOUTH	RX BLDG 23'-6" EL. NORTH	RX BLDG 23'-6" EL. SOUTH
O.S & Y GATE VALVE (Ref. Only)	V-9-165 2 1/2"	V-9-171 2 1/2"	V-9-177 LO 6"	V-9-184 6"
DELUGE VALVE	V-9-166 2 1/2"	V-9-172 2 1/2"	V-9-179 6"	V-9-186 6"
ALARM CONTROL VALVE	V-9-167 3/4"	V-9-173 3/4"	V-9-180 3/4"	V-9-187 3/4"
ALARM TEST VALVE	V-9-168 1/2"	V-9-174 1/2"	V-9-181 1/2"	V-9-188 1/2"
MAIN DRAIN VALVE	V-9-169 1 1/2"	V-9-175 1 1/2"	V-9-182 2"	V-9-189 2"
DRAIN CHECK VALVE	V-9-317 1"	V-9-319 1"	V-9-321 1"	V-9-323 1"
HDR. WATER GA. ISOLATION VALVE	V-9-170 1/4"	V-9-176 1/4"	V-9-183 1/4"	V-9-190 1/4"
HEADER WATER PRESSURE GAUGE	PI-9-59	PI-9-60	PI-9-61	PI-9-62
PILOT LINE GA. ISOLATION VALVE	V-9-2111 1/2"	V-9-2112 1/2"	V-9-2113 1/2"	V-9-2114 1/2"
PILOT LINE WATER PRESSURE GA.	PI-811-1776	PI-811-1777	PI-811-1778	PI-811-1779
PILOT LINE CHECK VALVE	V-9-2107 1/4"	V-9-2108 1/4"	V-9-2109 1/4"	V-9-2110 1/4"
PILOT LINE ISOLATION VALVE	V-9-2103 1/2"	V-9-2104 1/2"	V-9-2105 1/2"	V-9-2106 1/2"
SOLENOID VALVE	V-9-2115 1/2"	V-9-2116 1/2"	V-9-2117 1/2"	V-9-2118 1/2"
WATER C.S. DRAIN VALVE # 1	V-9-954 LC 1/2"	V-9-965 1"		V-9-953 LC 1/2"
WATER C.S. DRAIN VALVE # 2				V-9-966 1"

DELUGE VALVE ASSEMBLY

FOR DELUGE SYSTEM	SYSTEM 4A	SYSTEM 4B	SYSTEM 9
LOCATION OF ASSEMBLY	OPPOSITE CABLE SPREAD ROOM	OPPOSITE CABLE SPREAD ROOM	FRESH WATER PUMP HOUSE
O.S & Y GATE VALVE	V-9-151 2 1/2"	V-9-158 6"	V-9-215 2 1/2"
DELUGE VALVE	V-9-153 2 1/2"	V-9-160 6"	V-9-217 2 1/2"
ALARM CONTROL BALL VALVE	V-9-154 3/4"	V-9-161 3/4"	V-9-218 3/4"
ALARM TEST VALVE	V-9-155 1/2"	V-9-182 1/2"	V-9-219 1/2"
MAIN DRAIN VALVE	V-9-156 1 1/2"	V-9-163 2"	V-9-222 1 1/2"
DRAIN CHECK VALVE	V-9-313 1"	V-9-315 1"	V-9-216 1"
GAUGE ISOLATION VALVE	V-9-157 1/4"	V-9-184 1/4"	V-9-220 1/4"
PRESSURE GAUGE (HEADER WATER)	PI-9-57	PI-9-58	PI-9-63
PILOT LINE GAUGE ISOLATION VALVE	V-9-2086 1/4"	V-9-2090 1/4"	V-9-2094 1/4"
PILOT LINE WATER PRESSURE GAUGE	PI-811-46	PI-811-47	PI-811-48 1/4"
PILOT LINE CHECK VALVE	V-9-2088 1/4"	V-9-2092 1/4"	V-9-2096 1/4"
PILOT LINE ISOLATION VALVE	V-9-2087 1/2"	V-9-2091 1/2"	V-9-2095 1/4"
SOLENOID VALVE	V-9-2089 1/2"	V-9-2093 1/2"	V-9-2097 1/2"
ALARM SWITCH	PS-811-0049 1/2"	PS-811-050 1/2"	PS-811-0051 1/2"

FLOW ALARM VALVE DETAIL

SPRINKLER SYSTEM 12

FLOW ALARM VALVE ASSEMBLY FOR	SPRINKLER SYSTEM 9	SPRINKLER SYSTEM 12	R. BUILD NORTH HEADER	R. BUILD SOUTH HEADER
LOCATION OF ASSEMBLY	4160 ROOM	CEILING OUTSIDE CONTROL ROOM	R. BUILD 23' EL NORTH	R. BUILD 23' EL SOUTH
O.S. & Y GATE VALVE	V-9-191 LO 6"	V-9-199 4"	V-9-222 LO 6"	V-9-231 6"
ALARM VALVE	V-9-193 6"	V-9-201 4"	V-9-225 6"	V-9-233 6"
ALARM CONTROL VALVE	V-9-194 LO 1/2"	V-9-202 1/2"	V-9-226 1/2"	V-9-234 1/2"
ALARM TEST VALVE	V-9-195 1/2"	V-9-203 1/2"	V-9-227 1/2"	V-9-235 1/2"
GAUGE 1 ISO. VALVE	V-9-196 1/4"	V-9-204 1/4"	V-9-228 1/4"	V-9-236 1/4"
GAUGE 2 ISO. VALVE	V-9-197 1/4"		V-9-229 1/4"	V-9-237 1/4"
MAIN DRAIN VALVE	V-9-198 2"	V-9-206 2"	V-9-230 2"	V-9-238 2"
DRAIN CHECK VALVE	V-9-327 1/2"	V-9-328 1/2"	V-9-330 1/2"	V-9-329 1/2"
PRESSURE GAUGE #1	PI-9-47	PI-9-49	PI-9-51	PI-9-53
PRESSURE GAUGE #2	PI-9-48		PI-9-52	PI-9-54
RETARDING CHAMBER	Y-9-104	Y-9-105	PS-811-1780	PS-811-1781
TEST INSPECTOR DRAIN VALVE		V-9-947		

NEW WAREHOUSE FLOW ALARM VALVE DETAIL

SPRINKLER SYSTEM	SYSTEM 8 (NITS)	
LOCATION	NEW WAREHOUSE	
ISOLATION VALVE	V-9-269	6"
ALARM VALVE	V-9-270	6"
ALARM TEST VALVE	V-9-272	1/2"
GAUGE 1 ISOLATION VALVE	V-9-273	1/4"
GAUGE 2 ISOLATION VALVE	V-9-274	1/4"
MAIN DRAIN VALVE	V-9-275	2"
DRAIN CHECK	V-9-277	1/2"
OUTSIDE SUPPLY CHECK	V-9-278	4"
ALARM CHECK	V-9-276	1/2"
PRESSURE GAUGE #1	PI-9-55	
PRESSURE GAUGE #2	PI-9-56	
ALARM CONTROL VALVE	V-9-364	
RETARDING CHAMBER	Y-9-103	
STRAINER	S-9-111	
PRESSURE SWITCH	PS-811-44	

SPRINKLER SYSTEMS

SPRINKLER SYSTEM	AREA PROTECTED	REFERENCE DRAWING
1	HYDROGEN SEAL OIL UNIT IN TURBINE BUILDING, BASEMENT SOUTH, LIFT PUMP ON TURBINE OPERATING FLOOR AND UNDER TURBINE ON TURBINE MEZZANINE SOUTH.	GN-8-5832-5
2	CABLE TRAYS, OIL LINES AND GENERAL AREA IN CONDENSER BAY.	GN-8-5832-9 GN-8-5832-5
3	LUBE OIL PURIFICATION SYS., OIL LINES AND AREA PROTECTION IN TURBINE BUILDING BASEMENT NORTH AND OIL LIFT ON TURBINE MEZZANINE NORTH.	GN-8-5832-4
4	MOTOR GENERATOR SET ROOM	GN-8-5832-4
5	OLD WAREHOUSE (NITS)	
6	MACHINE SHOP, TOOL ROOM, ELECTRICAL SHOP AND OLD Q.A. STORE ROOM (NITS)	
7	TURBINE BEARING WATER SPRAY SYSTEM	MF-71024
8	NEW WAREHOUSE (NITS)	INDUSTRIAL SPKR SH 1 OF 2
9	TURBINE BUILDING BASEMENT SOUTH	AP-5-2058 SH 3 OF 14
10	REACTOR BUILDING 119'	AP-5-2058 SH 9 OF 14
11	REACTOR BUILDING 75' SPENT FUEL POOL PUMPS	AP-5-2058 SH 10 OF 14
12	MONITOR & CHANGE ROOM, COMPUTER ROOM	AP-5-2058 SH 13 OF 14
13		
14	MAINTENANCE BUILDING (NITS)	AP-5-2114
15	NEW CABLE SPREADING ROOM	GN-FP-501, GN-FP-502, GN-FP-505, GN-FP-536
17A & B	SITE EMERGENCY BUILDING	FQ-1
18 19 20A 20B 20C 21	LLRW SERVICE HEAD,TRUCK BAY ,CELL STORAGE AREAS LLRW DAW STORAGE ,COMPACTOR AREAS NEW OFFICE BUILDING,1ST FLOOR NEW OFFICE BUILDING,2ND FLOOR NEW OFFICE BUILDING 3RD FLOOR HEATER BAY ROOF BUILDINGS (DRY PIPE)	

DELUGE SYS.	DELUGE SYS. AREA PROTECTION	REF. DWG.
1	MAIN TRANSFORMER 1A, AUX TRANSFORMER	GN-8-5832-8
2	MAIN TRANSFORMER 1B, START UP TRANSFORMER A&B	GN-8-5832-3,GN 8 5832-3A
3	TURBINE BUILDING BASEMENT NORTH – OIL TANK A&B	GN-8-5832-4
4A & 4B	CABLE SPREADING ROOM	AP-5-2058 SH 4 OF 14
5	REACTOR BUILDING NORTH 51'	AP-5-2058 SH 5 OF 14
6	REACTOR BUILDING SOUTH 51'	AP-5-2058 SH 6 OF 14
7	REACTOR BUILDING NORTH 23'	AP-5-2058 SH 7 OF 14
8	REACTOR BUILDING SOUTH 23'	AP-5-2058 SH 8 OF 14
9	FRESH WATER PUMP HOUSE (COMBINATION WITH SPRINKLER SYSTEM)	AP-5-2058 SH 2 OF 14
10	STATION BLACKOUT (SBO) TRANSFORMER (DRY PILOT)	
16	CABLE TRAY BRIDGE TUNNELS (MANUAL PREACTION)	GN-FP-501, GN-FP-503, GN-FP-507

SPRINKLER FLOW ALARM VALVE DETAIL

SPRINKLER SYSTEM	SYSTEM 1	
LOCATION	4160 ROOM	
ISOLATION VALVE	V-9-40 LO	4"
ALARM VALVE	V-9-39	4"
TEST VALVE	V-9-82	1/2"
DRAIN VALVE	V-9-83	2"
GAUGE VALVE 1	V-9-133	1/4"
GAUGE VALVE 2	V-9-134	1/4"
ALARM CHECK VALVE	V-9-324	3/4"
PRESSURE GAUGE #1	PI-9-64	
PRESSURE GAUGE #2	PI-9-65	
STRAINER	S-9-109	
AUX. DRAIN VALVE	V-9-949	
RETARDING CHAMBER	Y-9-108	

DELUGE VALVE DETAIL

DELUGE SYSTEM	SYSTEM 1	SYSTEM 2	SYSTEM 3
LOCATION	SV 4160 RM	SV 4160 RM	TB NV-0'
ISOLATION VALVE	V-9-38 LO 6"	V-9-37 LO 6"	V-9-46 4"
DELUGE VALVE	V-9-36 6"	V-9-35 6"	V-9-45 4"
TEST VALVE	V-9-88 LO 1/2"	V-9-92 LO 1/2"	V-9-96 LO 1/2"
DRAIN VALVE	V-9-89 2"	V-9-93 2"	V-9-97 2"
SOLENOID VALVE	V-9-90 1/2"	V-9-94 1/2"	V-9-98 1/2"
GAUGE VALVE 1	V-9-139 1/4"	V-9-141 1/4"	V-9-143 1/4"
GAUGE VALVE 2	V-9-140 1/4"	V-9-142 1/4"	V-9-144 1/4"
TEST ISOLATION VALVE	V-9-91 1/2"	V-9-95 1/2"	V-9-99 1/2"
ALARM CHECK VALVE	V-9-306 3/4"	V-9-308 3/4"	V-9-310 3/4"
TEST CHECK VALVE	V-9-307 1/2"	V-9-309 1/2"	V-9-311 1/2"
PRESSURE GAUGE #1	PI-9-70	PI-9-72	PI-9-74
PRESSURE GAUGE #2	PI-9-71	PI-9-73	PI-9-75
STRAINER	S-9-112	S-9-117	S-9-113
AUX. DRAIN VALVE	V-9-922	V-9-923	

SPRINKLER FLOW ALARM VALVE DETAIL

SPRINKLER SYSTEM	SYSTEM 2	
LOCATION	TB NV-0'	
ISOLATION VALVE	V-9-44 LO	8"
ALARM VALVE	V-9-43	8"
TEST VALVE	V-9-84 LO	1/2"
DRAIN VALVE #1	V-9-85	2"
GAUGE VALVE 1	V-9-135	1/4"
GAUGE VALVE 2	V-9-136	1/4"
ALARM CHECK VALVE	V-9-325	3/4"
PRESSURE GAUGE #1	PI-9-66	
PRESSURE GAUGE #2	PI-9-67	
DRAIN VALVE #2	V-9-363	
SUMP VALVE	V-9-362	
RETARDING CHAMBER	Y-9-101	
STRAINER	S-9-110	

SPRINKLER FLOW ALARM VALVE DETAIL

SPRINKLER SYSTEM	SYSTEM 3	
LOCATION	TB NV-0'	
ISOLATION VALVE	V-9-15	4"
ALARM VALVE	V-9-14	4"
TEST VALVE	V-9-86 LO	1/2"
DRAIN VALVE	V-9-87	2"
GAUGE VALVE 1	V-9-137	1/4"
GAUGE VALVE 2	V-9-138	1/4"
ALARM CHECK VALVE	V-9-326	3/4"
PRESSURE GAUGE #1	PI-9-68	
PRESSURE GAUGE #2	PI-9-69	
SUMP VALVE	V-9-365	
RETARDING CHAMBER	Y-9-102	

SPRINKLER FLOW ALARM VALVE DETAIL

SPRINKLER SYSTEM	SYSTEM 17A & B	
LOCATION	SITE EMER. BLDG MECH. ROOM	
ISOLATION VALVE	V-9-507	6"
ALARM CONTROL VALVE	V-9-489	1/2"
ALARM TEST VALVE	V-9-490	1/2"
ALARM CHECK VALVE	V-9-491	3/4"
DRAIN CHECK VALVE	V-9-493	1/2"
OUTSIDE SUPPLY CHECK VLV.	V-9-486	4"
MAIN DRAIN VALVE	V-9-488	2"
PRESSURE GAUGE VALVE 1	V-9-492	1/4"
PRESSURE GAUGE VALVE 2	V-9-494	1/4"
STRAINER	S-9-116	
RETARDING CHAMBER	Y-9-115	
PRESSURE GAUGE 1	PI-811-745	
PRESSURE GAUGE 2	PI-811-744	
FLOW ALARM VALVE	V-9-487	6"

SPRINKLER DELUGE VALVE DETAIL

SPRINKLER SYSTEM	SYSTEM 16	
LOCATION	OUTSIDE DOOR TO NCSR	
ISOLATION VALVE	V-9-441 LO	4"
DELUGE VALVE	V-9-442	4"
MAIN DRAIN VALVE	V-9-443	2"
BALL DRIP VALVE	V-9-476	1"
GAUGE VALVE 1	V-9-445	1/4"
GAUGE VALVE 2	V-9-444	1/4"
ALARM CONTROL VALVE	V-9-448 LO	1/2"
ALARM TEST VALVE	V-9-447 LC	1/2"
CHAMBER SUPPLY CNTRL. VLV.	V-9-446	1/2"
CHECK VALVE	V-9-481	1/2"
PRESSURE GAUGE 1	PI-9-620	
PRESSURE GAUGE 2	PI-9-621	
STRAINER	S-9-114	

SPRINKLER FLOW ALARM VALVE DETAIL

SPRINKLER SYSTEM	SYSTEM 15	
LOCATION	OUTSIDE DOOR TO NCSR	
ISOLATION VALVE	V-9-449	4"
ALARM VALVE	V-9-450	4"
MAIN DRAIN VALVE	V-9-451	2"
DRAIN VALVE	V-9-477	1"
GAUGE VALVE 1	V-9-452	1/4"
GAUGE VALVE 2	V-9-453	1/4"
CHECK VALVE	V-9-454	1/2"
ALARM CONTROL VALVE	V-9-455 LO	1/2"
ALARM TEST VALVE	V-9-482	1/2"
PRESSURE GAUGE 1	PI-9-618	
PRESSURE GAUGE 2	PI-9-619	
RETARDING CHAMBER	Y-9-114	
STRAINER	S-9-115	

MAINTENANCE BLDG. FLOW ALARM VALVE DETAIL

SPRINKLER SYSTEM	SYSTEM 14 (NITS)	
LOCATION	MAINTENANCE BLDG.	
ISOLATION VALVE	V-9-332 (OUTSIDE)	
ALARM VALVE	V-9-370	6"
ALARM CONTROL VALVE	V-9-377	1/2"
ALARM TEST VALVE	V-9-371	1/2"
GAUGE 1 ISOLATION VALVE	V-9-372	1/4"
GAUGE 2 ISOLATION VALVE	V-9-373	1/4"
MAIN DRAIN VALVE	V-9-374	2"
DRAIN CHECK	V-9-375	1/2"
OUTSIDE SUPPLY CHECK	V-9-376	1"
PRESSURE GAUGE #1	PI-9-336	
PRESSURE GAUGE #2	PI-9-337	
RETARDING CHAMBER	Y-9-106	
FLOW SWITCH	FS-811-45	

NOTES:

1. SEE SHEET 1 FOR NOTES AND REFERENCES

LABELLING NOTE:

ALL VALVES ON THIS SHEET ARE PREFIXED V-9 UNLESS OTHERWISE NOTED.

REV	ZONE	DESCRIPTION
35	F,G,H-8	ECO C312148

CAD FILE NAME: JC 19479 S2 R35

REVISION 31 OF THIS DRAWING WAS TRANSLATED TO AUTOCAD FROM CAD FILE:V3E,811,21,0100,802--,3101

REVISION 24 OF THIS DRAWING WAS REDRAWN FROM JC 19479 SH2, REV.9.

THIS IS A COMPUTER GENERATED DRAWING DO NOT REVISE IT MANUALLY

GPU NUCLEAR

DRAWN: NANCY A. CARLSON 3-17-00
CHECKED: D.ABBRUSCATO 3-17-00

OYSTER CREEK

FIRE PROTECTION WATER SYSTEM

FLOW DIAGRAM

DWG. NO. JC 19479 | SH. 2 OF 4 | REV. 35

SCALE: NONE

PIMS # N/A

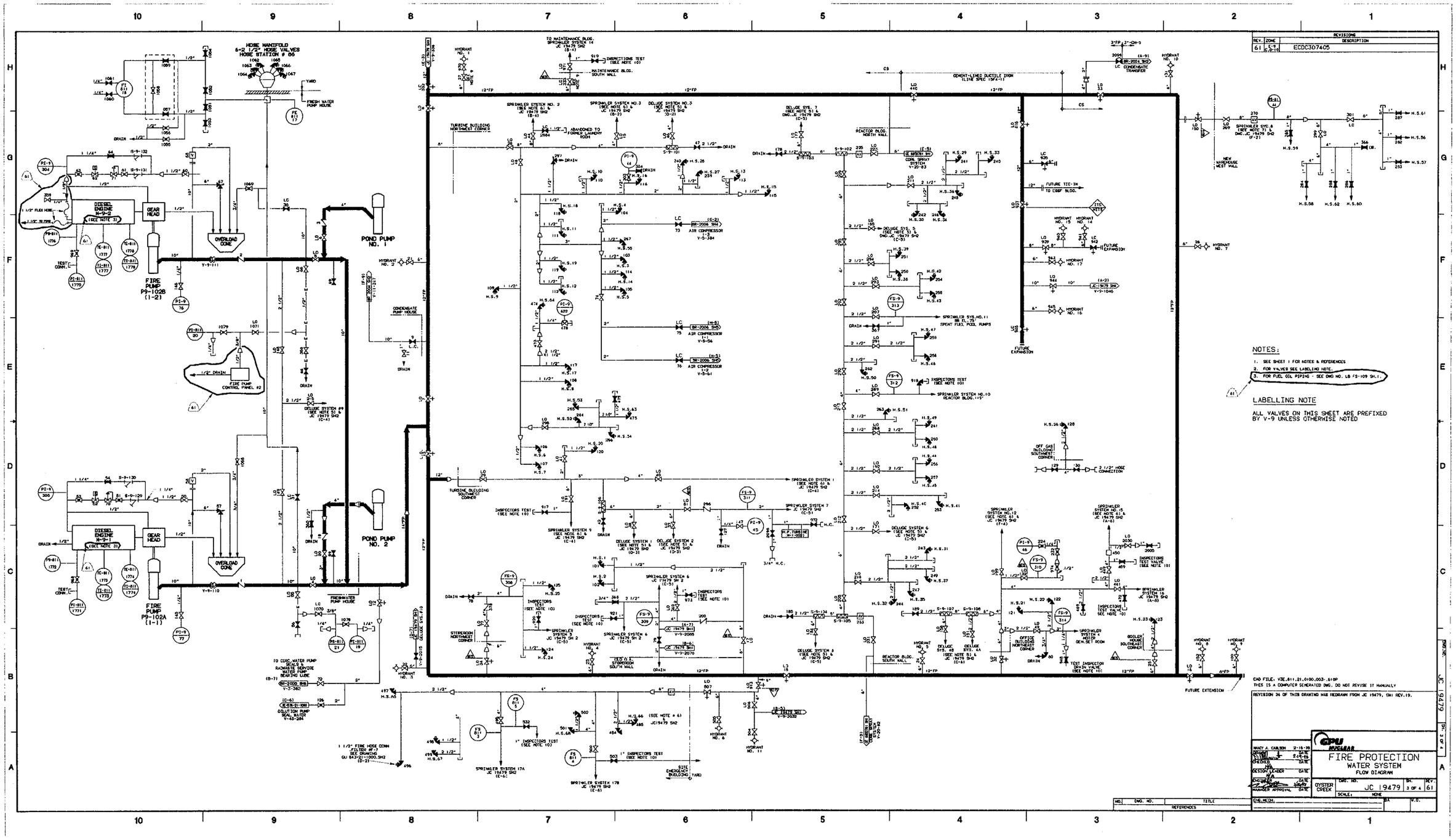

NOTES:

1. SEE SHEET 1 FOR NOTES & REFERENCES
2. FOR VALVES SEE LABELLING NOTE.
3. FOR FUEL OIL PIPING - SEE DWG NO. LB FS-109 SH.1.

LABELLING NOTE

ALL VALVES ON THIS SHEET ARE PREFIXED BY V-9 UNLESS OTHERWISE NOTED

CAD FILE: V3E.811.21.0100.003-.610P
THIS IS A COMPUTER GENERATED DWG. DO NOT REVISE IT MANUALLY

REVISION 24 OF THIS DRAWING WAS REDRAWN FROM JC 19479, SH1 REV.19.

REV.	ZONE	DESCRIPTION
61	E-9 C-10	ECDC307405

GPU NUCLEAR

FIRE PROTECTION
WATER SYSTEM
FLOW DIAGRAM

OYSTER CREEK

DWG. NO. JC 19479 SH. 3 OF 4 REV. 61

SCALE: NONE

DWG. NO. JC 19479 SH. 3 OF 4

NO.	DWG. NO.	TITLE
		REFERENCES

REVISIONS		
REV.	ZONE	DESCRIPTION
29	07	REVISED PER ECO C212001

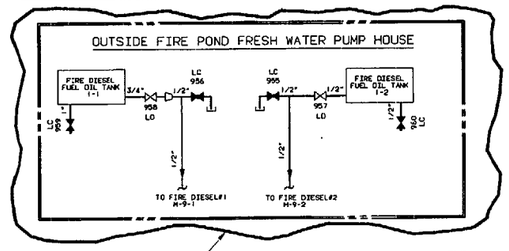

OPERATING DATA						
P	FLOW GPM	PRESS PSIG	TEMP °F	BY	REMARKS	REV
1	2000	100	150		PUMP RATING	0

DESIGN DATA									
P	NORMAL		UPSET			BY	$K = \frac{TH}{\sqrt{10}}$	REMARKS	REV
	PSIG	°F	PSIG	°F	TIME				
1	125	100	175	100					0

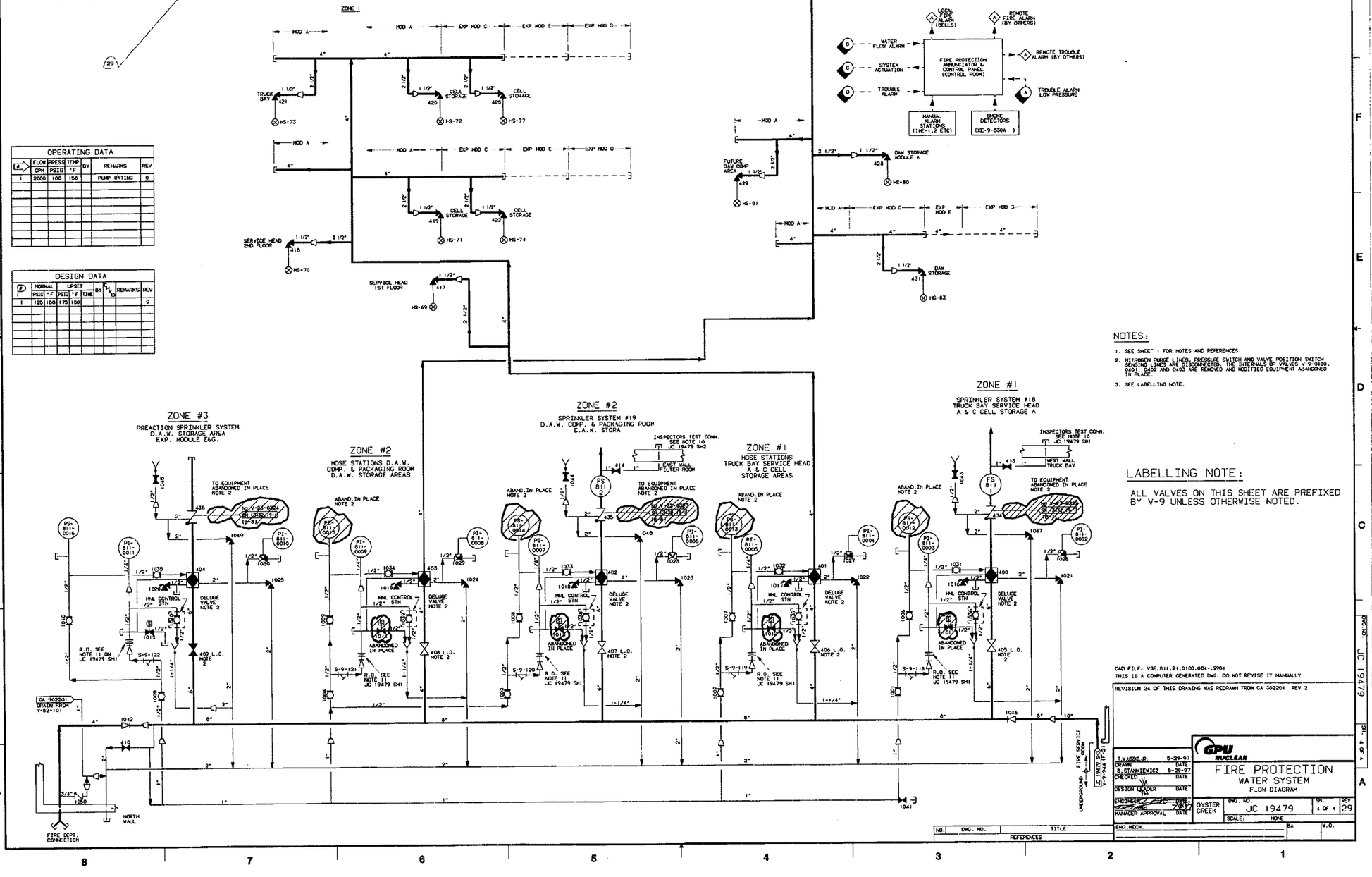

NOTES:

1. SEE SHEET 1 FOR NOTES AND REFERENCES.
2. NITROGEN PURGE LINES, PRESSURE SWITCH AND VALVE POSITION SWITCH SENSING LINES ARE DISCONNECTED. THE INTERNALS OF VALVES V-9-0400, 0401, 0402 AND 0403 ARE REMOVED AND MODIFIED EQUIPMENT ABANDONED IN PLACE.
3. SEE LABELLING NOTE.

LABELLING NOTE:

ALL VALVES ON THIS SHEET ARE PREFIXED BY V-9 UNLESS OTHERWISE NOTED.

CAD FILE: V3E,811.21,0100,004-,2901
THIS IS A COMPUTER GENERATED DWG. DO NOT REVISE IT MANUALLY

REVISION 24 OF THIS DRAWING WAS REDRAWN FROM GA 302201 REV 2

NO.	DWG. NO.	TITLE
		REFERENCES

T.W.USZKO,JR.	5-29-97	GPU NUCLEAR
DRAWN	DATE	
B.STANKIEWICZ	5-29-97	FIRE PROTECTION WATER SYSTEM FLOW DIAGRAM
CHECKED	DATE	
N/A		
DESIGN LEADER	DATE	
N/A		
ENGINEER	DATE	OYSTER CREEK
MANAGER APPROVAL	DATE	DWG. NO. JC 19479 SH. 4 OF 4 REV. 29
		SCALE: NONE
ENG.MECH.		BA W.O.

JC 19479 SH 4 OF 4 ON DWG

REVISIONS		
REV	ZONE	DESCRIPTION
18	0-3	ECDC205432 ADDED DRW SAMPLE TANKS SHED

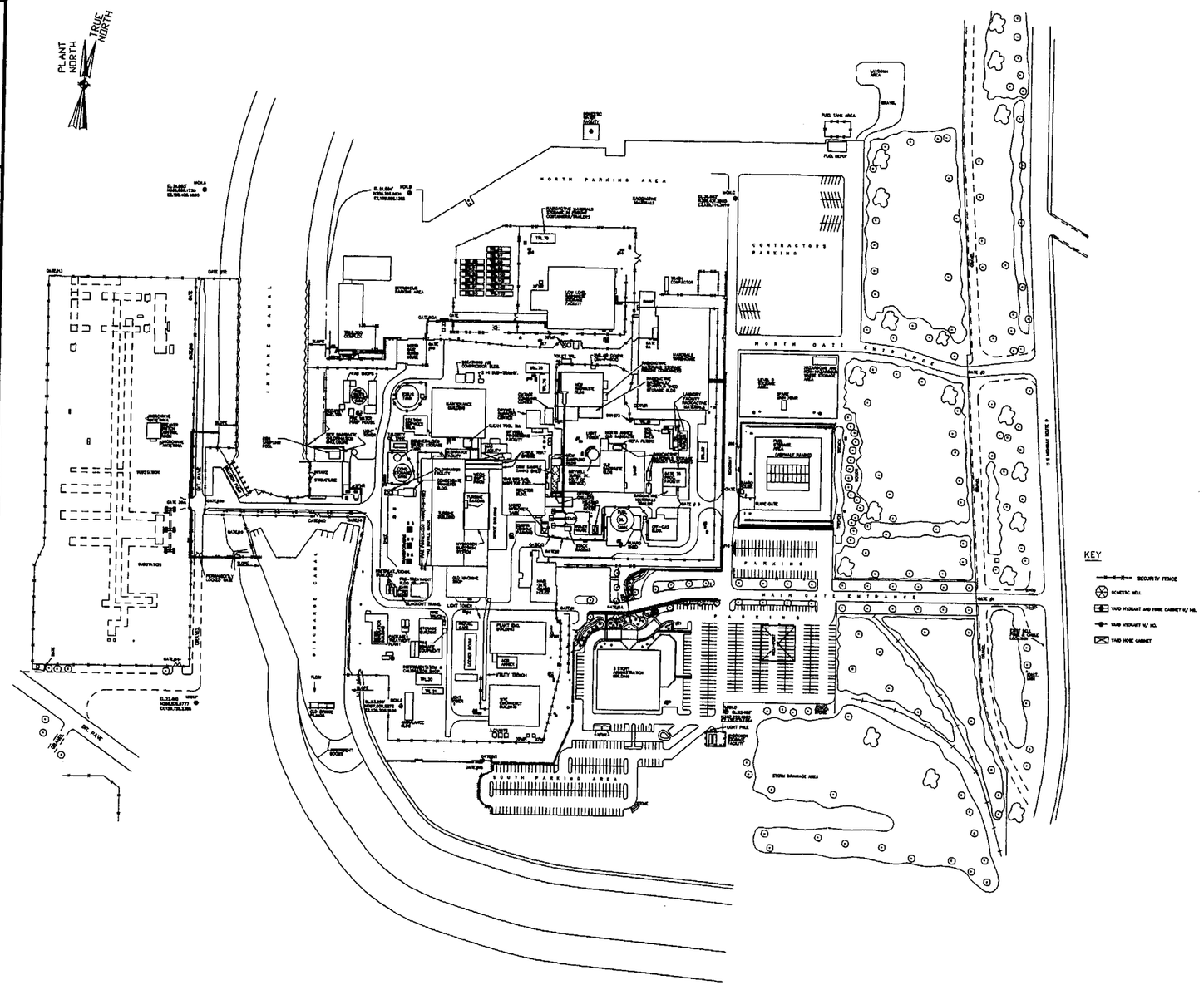

KEY

- SECURITY FENCE
- DOMESTIC WELL
- YARD HYDRANT AND HOSE CABINET W/ NO.
- YARD HYDRANT W/ NO.
- YARD HOSE CABINET

CAD FILE: JC 19702 S1 R18

REVISION 15 OF THIS DRAWING WAS TRANSLATED TO AUTOCAD FROM CADAM FILE V3E,120,01,0000,000-,1501

THIS IS A COMPUTER GENERATED DRAWING DO NOT REVISE IT MANUALLY

GPU NUCLEAR

SITE PLAN

OYSTER CREEK NUCLEAR GENERATING STATION

OYSTER CREEK

DWG. NO. JC 19702 | SH. 1 OF 1 | REV. 18

SCALE : 1" = 80'--0"

PIMS # N/A

NO.	DWG. NO.	TITLE
2	3E-120-01-001	SITE PLAN PLANNING BOARD APPLICATION
1	3E-SK-M-97	PROPOSED SPACE ALLOCATION LAYOUT SITE PLAN

REFERENCES

REVISIONS		
REV	ZONE	DESCRIPTION
34		ECO C306888

LOADS CHAN 'A' 125V DC CHAN 'A' FROM DC PNL 1D CKT #14
REF 24, SH 1

CONTROL SYSTEM PWR ON | AUTO START | INTERLOCK IN BYPASS | HIGH DRYWELL PRESSURE | START PUMP NZ01A | SEQ START AFTER FAILURE | START PUMP NZ01C | READIES VALVES | REACTOR PRESS | SYS I DISCH PRESS | REACTOR VESSEL LOW-LOW LEVEL | START PUMP NZ03A | START PUMP NZ03C TRIP PUMP NZ03A | BOOSTER PUMP DISCHARGE | REACTOR VESSEL LOW LEVEL OVERIDE | HIGH DRYWELL PRESSURE OVERRIDE

LEGEND:

- □ 1F/2F – INDICATES DEVICE LOCATED IN CONTROL PANEL 1F/2F
- □ ER-642-112 – INDICATES DEVICE LOCATED IN PANEL ER-642-112
- □ D1 – INDICATES DEVICE LOCATED IN 4160V SWGR 1D UNIT D
- □ RK01 – INDICATES DEVICE LOCATED IN INSTRUMENT RACK RK01
- □ ER18A – INDICATES DEVICE LOCATED IN PANEL ER18A
- □ ER18B – INDICATES DEVICE LOCATED IN PANEL ER18B
- □ 18R – INDICATES DEVICE LOCATED IN PANEL 18R
- □ JB – INDICATES TERMINAL BLOCK LOCATED INSIDE OF TERMINAL BOX TB-R2035
- □ L – INDICATES DEVICE LOCATED LOCALLY
- ⟜ – INDICATES BANANA TEST JACK

NOTES:

1. ALL DEVICES ARE LOCATED IN PANEL ER18A UNLESS OTHERWISE NOTED

16K116A: SPARE; AUTOSTART 1 DISABLED ANNUN 'B'-7e REF 8, SH 2; SPARE; SPARE; SPARE; SPARE

16K120A: NOT USED; TRIP NZ03C REF 7, SH 15B; NOT USED; TRIP NZ01A REF 3,SH 1B; NOT USED; TRIP NZ01C REF 3, SH 25

16K101A: INTLK 16K103A THRU 16K107A; START DIESEL GEN #1 REF 14; INTLK V-20-27 REF 11, SH 163B; INTLK V-20-03 REF 11, SH 156A; INTLK V-20-27 REF 11, SH 163D; INTLK V-20-32 REF 11, SH 159B

16K102A: SYSTEM 1 AUTOSTART ANNUN 'B'-1e REF 8, SH 1; START DIESEL GEN #1 REF 14; INTLK 16K111A, 16K113A,16K112A & 16K120A; AUTOSTART 16K101A, 16K102A & 16K120A; CLOSE INTLK V-20-3 SYS 1 REF 11, SH 158A; CLOSE INTLK V-20-32 SYS 2 REF 11, SH 159B

16K117A: CROSS-CHAN INHIBIT ANNUN 'B'-7d REF 8, SH 2; SPARE; SPARE; SPARE; SPARE; SPARE

16K115A4X3: SEAL-IN; NOT USED; INTLK 16K115AX1 & 16K115A2 REF 5; NOT USED; SPARE; SPARE; SPARE; SPARE

16K115AY: INTLK 16K115AX3; NOT USED; INTLK 16K115AA & 16K115A; NOT USED; SPARE; SPARE; SPARE; SPARE

16K115AA: NOT USED; DEMAND PP 'ON' ANNUN 'B'-2d REF 8, SH 1; SPARE; SPARE; SPARE; SPARE; SPARE

16K115A: INTLK 16K101A, 16K102A & 16K120A; INTLK 16K214A REF 5; INTLK 16K101B, 16K102B & 16K120B REF 1, SH 2; EVENT RECORDER 45.6 REF 6; LOW PRESS HI-HI ANNUN 'C'-1f REF 2; INTLK 16K123A & 16K124A

16K103A: INTLK 16K111A; START PUMP NZ01A REF 3, SH 1B; SPARE; SPARE; NOT USED (CRD PUMP START CIRCUIT REF 28); SPARE

16K104A: INTLK 16K105A; NOT USED; INTLK 16K113A; NOT USED; SPARE; SPARE; SPARE; SPARE

16K105A: INTLK 16K103A; START PUMP NZ01C REF 3, SH 25; INTLK 16K111A; SEAL-IN; TRIP PUMP NZ01A REF 3, SH 1B; NOT USED (CRD PUMP START NC08A REF 28)

16K106A: INTLK V-20-12 REF 11, SH 160; SPARE; INTLK V-20-15 REF 11, SH 161A; SPARE; INTLK V-20-40 REF 11, SH 162; SPARE

16K107A: SPARE; INTLK V-20-12 REF 11, SH 160; SPARE; INTLK V-20-15 REF 11, SH 161A; EVENT RECORDER 45.3 REF 8; INTLK V-20-40 REF 11, SH 162

16K108A: INTLK 16K106A & 16K107A; SYSTEM 1 FLOW PERMIS ANNUN 'B'-2e REF 8, SH 1; SPARE; INTLK V-20-15 REF 11, SH 161A; INTLK V-20-40 REF 11, SH 162; SPARE

16K109A: INTLK 16K111A; INTLK 16K105A; SPARE; INTLK CORE SPRAY PP SYS 1 REF 13; SYSTEM 1 FLOW PERMIS ANNUN 'B'-2e REF 8, SH 1; SPARE

16K110A: INTLK 16K101A, 16K102A & 16K120A; INTLK 16K101B, 16K102B & 16K120B REF 1, SH 2; INTLK CONT SPRAY 16K8A 16K7A REF 4; INTLK 16K121A & 16K122A; DEMAND PP 'ON' ANNUN 'B'-2d REF 8, SH 1; INTLK ENERG COND 6K9 REF 9

16K111A: SPARE; SPARE; START N203A REF 7, SH 15A; SPARE; SPARE; SPARE

16K112A: INTLK 16K113A; NOT USED; SPARE; SPARE; SPARE; SPARE

16K113A: INTLK 16K111A; SEALIN 16K113A; START NZ03C REF 7, SH 15B; TRIP NZ03A REF 7, SH 15A; SPARE; SPARE

16K114A: INTLK 16K113A; INTLK 16K113C REF 1, SH 3; SYSTEM 1 FLOW PERMIS ANNUN 'B'-2e REF 8, SH 1; SPARE; INTLK 16K206A 16K202A, 16K115D31, 16K115B2 REF 5; INTLK 16K207A 16K220A, 16K115AX1, 16K115AX2 REF 5

16K121A: SEAL-IN; NOT USED; NOT USED; AUTO START 16K120A, 16K101A & 16K102A; NOT USED; INTLK 16K101B 16K102B & 16K120B REF 1, SH 2

16K122A: START DIESEL GEN #1 REF 14; NOT USED; NOT USED (START NC08A REF 28); NOT USED; SPARE; SPARE; SPARE; SPARE

16K123A: SEAL-IN; NOT USED; NOT USED (CRD PUMP START NC08A REF 28); NOT USED; AUTO START 16K120A, 16K101A & 16K102A; INTLK 16K101B 16K102B & 16K120B REF 1, SH 2

16K124A: START DIESEL GEN #1 REF 14; NOT USED; SPARE; SPARE; SPARE; SPARE; SPARE; SPARE

INTERLOCK CONTROL

NORMAL

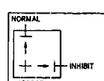

DECK	CONTACT	POSITION: INHIBIT	POSITION: NORMAL	FUNCTION	REF. THIS DWG.
1	1 2 3		x	AUTO START	-
2	4 5 6	x			-
3	5 6 4		x		-
4	7 8 9	x			-

ELETRO SWITCH SERIES 20
LOCK-1252AA-002, KEY LOCK

NO.	DWG. NO.	TITLE
28	BR E1132	CONTROL ROD DRIVE FEED PUMP NC08A
27	E2-0370-031-005	CONN. DIAG RELAY PANEL ER18D
26	E2-0370-031-004	CONN. DIAG RELAY PANEL ER18A
25	GE 10305287 SH.3	METALCLAD SWGR INTERCONN DIAG
24	GU 3C-735-11-001	125V STATION DC SYS PANEL 'D'
23	GE 719E211	CONN DIAG PANEL 1F/2F
22	NH 7023-56795-33A	WIRING DIAG AUX REL PNL ER-642-112
21	GE 719E252	PANEL ER18B CONN DIAG
20	GE 719E251	PANEL ER18A CONN DIAG
19	GU 3E822-18-1002 SH.1	CONN DIAG CONTROL PANEL 18R
18	BR 3047	MISC CONN DIAGRAM
17	GE 112C2808 SH.3	CONN DIAG INSTRUMENT RACK RK01
16	GU 3C-642-18-02	ENG SAFEGUARDS ACT SYS CONN DIAG
15	GE 8850781	CORE SPRAY SYSTEM FLOW DIAG
14	GM 6393098	DIESEL GEN #1 ELEM DIAG
13	GU 3B-212-17-1000	CORE SPRAY FILL PUMP SYS 1
12	GE 718E644 SH.2	ELEM DIAG - CORE SPRAY CONTROL
11	GE 1579E350	CORE SPRAY SYS MCC ELEM DIAG
10	GE 223R0173 SH.21	4160V SYS ELEM DIAG SWGR 1D
9	BR 3029 SH.2	D.C. CONTROL ELEM DIAG
8	GU 3E-611-17-004	ELEM DIAG ANNUNCIATOR 'B'
7	GE 116B3328	CORE SPRAY SYS ELEM DIAG 480V USS
6	GE 8860301	ELEM DIAG SEL INPUTS TO PLANT COMPUTER
5	GE 729E182 S-1.1	AUTO DEPRESSURIZATION ELEM DIAG
4	GE 237E901 S-1.1	ELEM DIAG CONTAINMENT SPRAY
3	GE 223R0173	CORE SPRAY ELEM DIAG PUMP CONTROL
2	GU 3E-611-17-005 SH.1	ELEM DIAG ANNUNCIATOR 'C'
1	NM 5060E6003	CORE SPRAY/RBCCW DRYWELL ISOL ELEM DIAG

REFERENCES

CAD FILE NAME: NU 5060E6003 SI R34

REVISION 33 OF THIS DRAWING WAS REDRAWN FROM NU 5060E6003 SH. 1 REV. 22 & NU 5060E6003 SH. 3 REV. 7

REVISION 32 OF THIS DRAWING WAS TRANSLATED TO AUTOCAD FROM CADAM FILE V3E.642.17.0008.001-3201

NUCLEAR SAFETY RELATED USE

THIS IS A COMPUTER GENERATED DRAWING DO NOT REVISE IT MANUALLY

DRAWN	E.A.MCKEE	03/02/98
DESIGN ENGINEER	N/A	
APPROVED		3/11/98
APPROVED		3/11/98
QUALITY ASSURANCE	N/A	

GPU NUCLEAR

CORE SPRAY/RBCCW DRYWELL ISOLATION
ELECTRICAL ELEMENTARY DIAGRAM

OYSTER CREEK | DWG. NO. NU 5060E6003 | SH. 1 | REV. 34 | SCALE : NONE | W.A. NO.

PWC NO. NU 5060E6003 SH. 1

STROKE 13

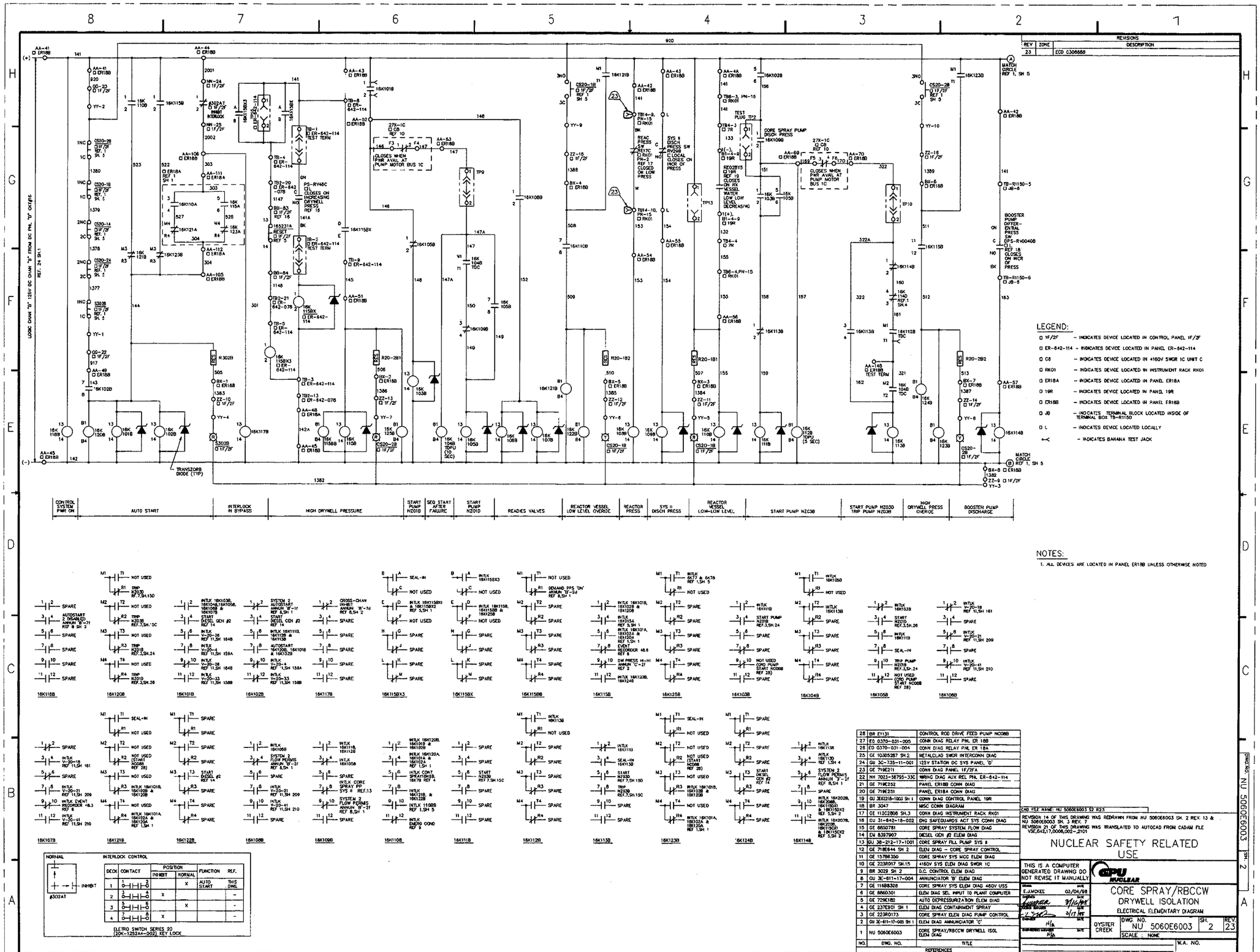

REVISIONS		
REV	ZONE	DESCRIPTION
23		ECO 0306868

28	BR E1131	CONTROL ROD DRIVE FEED PUMP NC08B
27	ED 0370-031-005	CONN DIAG RELAY PNL ER 18B
26	ED 0370-031-004	CONN DIAG RELAY PNL ER 18A
25	GE 103052B7 SH.2	METALCLAD SWGR INTERCONN DIAG
24	GU 3C-735-11-001	125V STATION DC SYS PANEL "D"
23	GE 719E211	CONN DIAG PANEL 1F/2FA
22	NH 7023-58795-33C	WIRING DIAG AUX REL PNL ER-642-114
21	GE 719E232	PANEL ER18B CONN DIAG
20	GE 719E251	PANEL ER18A CONN DIAG
19	GU 3E6218-1003 SH 1	CONN DIAG CONTROL PANEL 19R
18	BR 3047	MISC CONN DIAGRAM
17	GE 112C2808 SH.3	CONN DIAG INSTRUMENT RACK RK01
16	GU 31-842-18-002	DNG SAFEGUARDS ACT SYS CONN DIAG
15	GE 8850781	CORE SPRAY SYSTEM FLOW DIAG
14	EN 8397907	DIESEL GEN #2 ELEM DIAG
13	GU 3B-212-17-1001	CORE SPRAY FILL PUMP SYS II
12	GE 718E644 SH 2	ELEM DIAG – CORE SPRAY CONTROL
11	GE 157B8350	CORE SPRAY SYS MCC ELEM DIAG
10	GE 223K9017 SH.15	480V SYS ELEM DIAG SWGR 1C
9	BR 3028 SH 2	D.C. CONTROL ELEM DIAG
8	GU 3C-811-17-004	ANNUNCIATOR "B" ELEM DIAG
7	GE 116B8328	CORE SPRAY SYS ELEM DIAG 480V USS
6	GE 8860301	ELEM DIAG SEL INPUT TO PLANT COMPUTER
5	GE 729E182	AUTO DEPRESSURIZATION ELEM DIAG
4	GE 237E901 SH 1	ELEM DIAG CONTAINMENT SPRAY
3	GE 223K0173	CORE SPRAY ELEM DIAG PUMP CONTROL
2	GU 3E-811-17-003 SH 1	ELEM DIAG ANNUNCIATOR 'C'
1	NU 5060E6003	CORE SPRAY/RBCCW DRYWELL ISOL ELEM DIAG
NO.	DWG. NO.	TITLE
	REFERENCES	

CAD FILE NAME: NU 5060E6003 S2 R23

REVISION 14 OF THIS DRAWING WAS REDRAWN FROM NU 5060E6003 SH. 2 REV. 13 & NU 5060E6003 SH. 3 REV. 7

REVISION 21 OF THIS DRAWING WAS TRANSLATED TO AUTOCAD FROM CADAM FILE V3C.642,17,0008,002-,2101

NUCLEAR SAFETY RELATED USE

THIS IS A COMPUTER GENERATED DRAWING DO NOT REVISE IT MANUALLY

DRAWN	E.J.MCKEE	03/04/98
ENGINEER		3/16/98
PROJECT MANAGER		3/17/98
QUALITY ASSURANCE	N/A	

GPU NUCLEAR

CORE SPRAY/RBCCW DRYWELL ISOLATION

ELECTRICAL ELEMENTARY DIAGRAM

OYSTER CREEK

DWG NO. NU 5060E6003 | SH. 2 | REV. 23

SCALE : NONE

W.A. NO.

DWG NO: NU 5060E6003 SH: 2

STICK#13

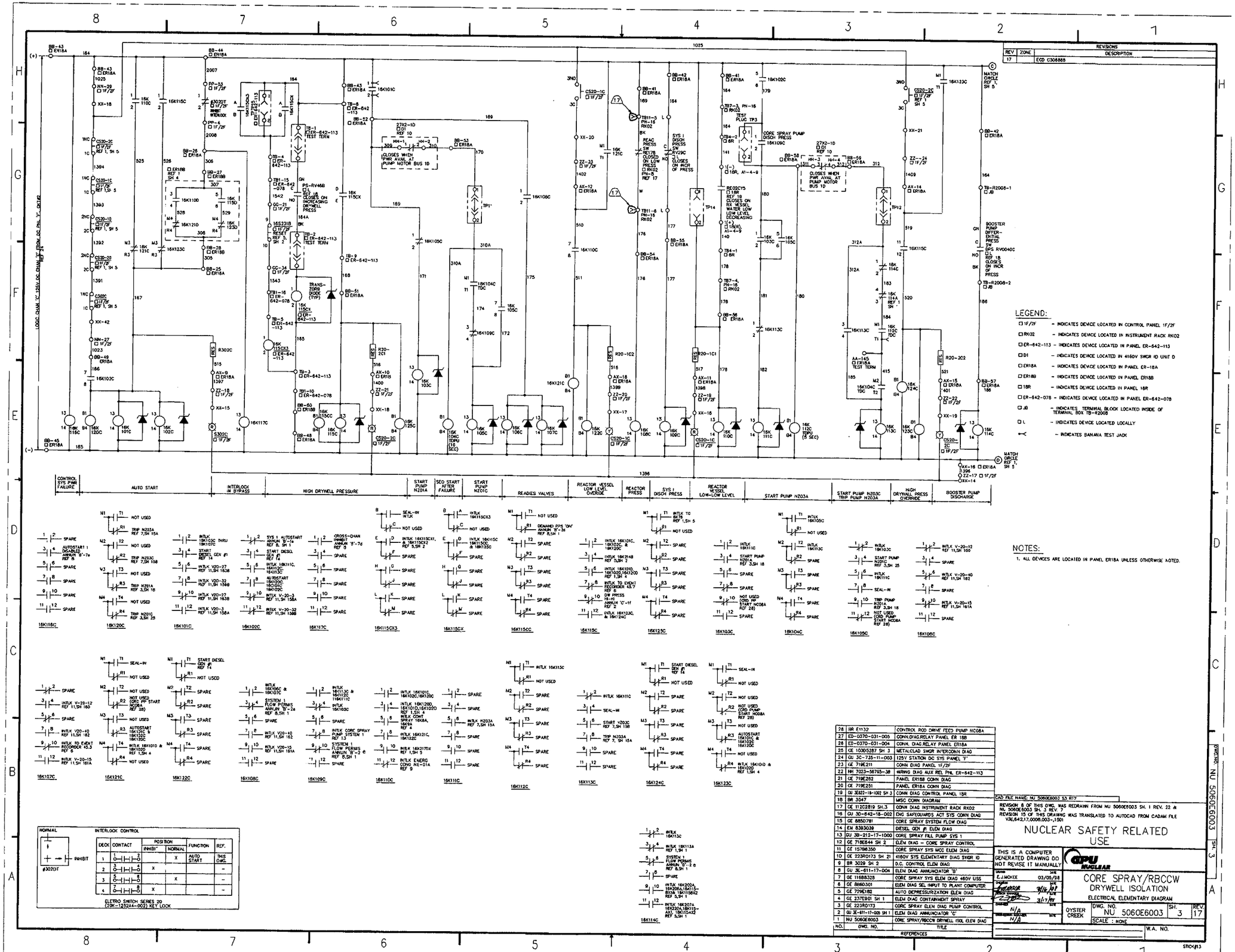

LEGEND:

- □ 1F/2F – INDICATES DEVICE LOCATED IN CONTROL PANEL 1F/2F
- □ RK02 – INDICATES DEVICE LOCATED IN INSTRUMENT RACK RK02
- □ ER-642-113 – INDICATES DEVICE LOCATED IN PANEL ER-642-113
- □ D1 – INDICATES DEVICE LOCATED IN 4160V SWGR ID UNIT D
- □ ER18A – INDICATES DEVICE LOCATED IN PANEL ER-18A
- □ ER18B – INDICATES DEVICE LOCATED IN PANEL ER18B
- □ 18R – INDICATES DEVICE LOCATED IN PANEL 18R
- □ ER-642-078 – INDICATES DEVICE LOCATED IN PANEL ER-642-078
- □ JB – INDICATES TERMINAL BLOCK LOCATED INSIDE OF TERMINAL BOX TB-R2008
- □ L – INDICATES DEVICE LOCATED LOCALLY
- ⊸ – INDICATES BANANA TEST JACK

NOTES:

1. ALL DEVICES ARE LOCATED IN PANEL ER18A UNLESS OTHERWISE NOTED.

NORMAL

INHIBIT

#302DT

INTERLOCK CONTROL

DECK	CONTACT	POSITION INHIBIT	POSITION NORMAL	FUNCTION	REF.
1	1 – 2		X	AUTO START	THIS DWG.
2	3 – 4	X			–
3	5 – 6		X		–
4	7 – 8	X			–

ELETRO SWITCH SERIES 20 (20K-1252A4-002) KEY LOCK

NO.	DWG. NO.	TITLE
28	BR E1132	CONTROL ROD DRIVE FEED PUMP NC08A
27	ED-0370-031-005	CONN.DIAG.RELAY PANEL ER 18B
26	ED-0370-031-004	CONN. DIAG.RELAY PANEL ER18A
25	GE 10305287 SH 3	METAL.CLAD SWGR INTER.CONN DIAG
24	GU 3C-735-11-003	125V STATION DC SYS PANEL 'F'
23	GE 719E211	CONN DIAG PANEL 1F/2F
22	HH 7023-56765-38	WIRING DIAG AUX REL PNL ER-642-113
21	GE 719E262	PANEL ER18B CONN DIAG
20	GE 719E251	PANEL ER18A CONN DIAG
19	GU 3E622-18-1002 SH 3	CONN DIAG CONTROL PANEL 18R
18	BR 3047	MISC CONN DIAGRAM
17	GE 112C2819 SH.3	CONN DIAG INSTRUMENT RACK RK02
16	GU 3D-642-18-002	ENG SAFEGUARDS ACT SYS CONN DIAG
15	GE 8850781	CORE SPRAY SYSTEM FLOW DIAG
14	EM 8393039	DIESEL GEN #1 ELEM DIAG
13	GU 3B-212-17-1000	CORE SPRAY FILL PUMP SYS 1
12	GE 718E644 SH 2	ELEM DIAG – CORE SPRAY CONTROL
11	GE 157B6350	CORE SPRAY SYS MCC ELEM DIAG
10	GE 223R0173 SH 21	4160V SYS ELEMENTARY DIAG SWGR ID
9	BR 3029 SH 2	D.C. CONTROL ELEM DIAG
8	GU 3E-611-17-004	ELEM DIAG ANNUNCIATOR 'B'
7	GE 116B8328	CORE SPRAY SYS ELEM DIAG 480V USS
6	GE 8860301	ELEM DIAG SEL INPUT TO PLANT COMPUTER
5	GE 729E182	AUTO DEPRESSURIZATION ELEM DIAG
4	GE 237E901 SH 1	ELEM DIAG CONTAINMENT SPRAY
3	GE 223R0173	CORE SPRAY ELEM DIAG PUMP CONTROL
2	GU 3E-611-17-005 SH 1	ELEM DIAG ANNUNCIATOR 'C'
1	NU 5060E6003	CORE SPRAY/RBCCW DRYWELL ISOL ELEM DIAG

REFERENCES

CAD FILE NAME: NU 5060E6003 S3 R17

REVISION 8 OF THIS DWG. WAS REDRAWN FROM NU 5060E6003 SH. 1 REV. 22 & NU 5060E6003 SH. 3 REV. 7
REVISION 15 OF THIS DRAWING WAS TRANSLATED TO AUTOCAD FROM CADAM FILE V3E,642,17,0006,003-,1501

NUCLEAR SAFETY RELATED USE

THIS IS A COMPUTER GENERATED DRAWING DO NOT REVISE IT MANUALLY

GPU NUCLEAR

DRAWN E.J.MCKEE DATE 03/05/98
CHECKED 3/16/98
DESIGN CHANGE 3/17/98
DRAWING N/A
CONFIDENCE REPORT N/A

CORE SPRAY/RBCCW DRYWELL ISOLATION

ELECTRICAL ELEMENTARY DIAGRAM

OYSTER CREEK

DWG. NO. NU 5060E6003 SH. 3 REV. 17

SCALE : NONE

W.A. NO.

STICK#13

DWG. NO. NU 5060E6003 SH. 3

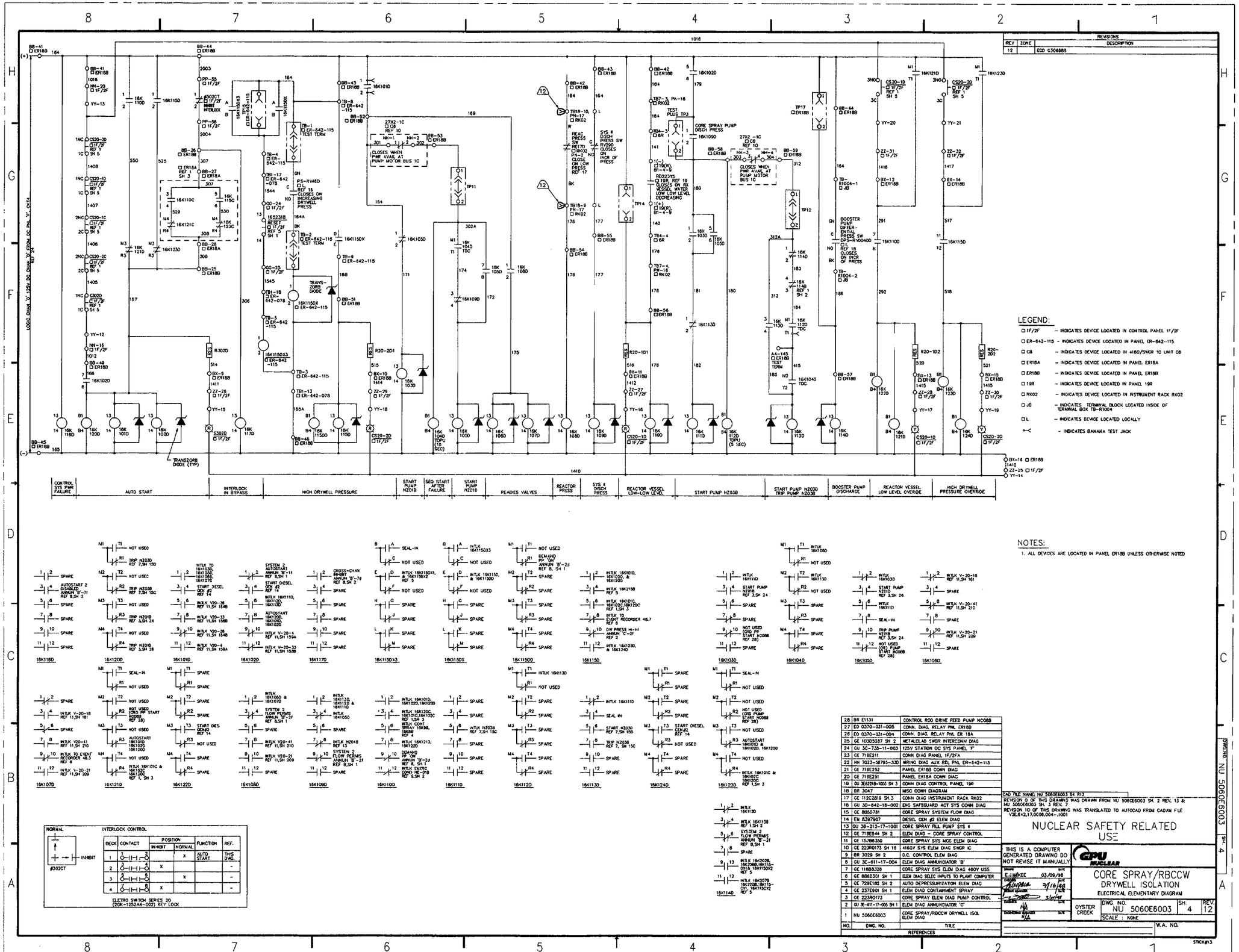

REVISIONS		
REV	ZONE	DESCRIPTION
12		ECO C306888

NO.	DWG. NO.	TITLE
28	BR E1131	CONTROL ROD DRIVE FEED PUMP NC08B
27	ED 0370-031-005	CONN. DIAG. RELAY PNL ER18B
26	ED 0370-031-004	CONN. DIAG. RELAY PNL ER 18A
25	GE 10305287 SH 2	METALCLAD SWGR INTERCONN DIAG
24	GU 3C-735-11-003	125V STATION DC SYS PANEL 'F'
23	GE 719E211	CONN DIAG PANEL 1F/2FA
22	NH 7023-58795-330	WIRING DIAG AUX REL PNL ER-642-115
21	GE 719E252	PANEL ER18B CONN DIAG
20	GE 719E251	PANEL ER18A CONN DIAG
19	GU 3E62218-1003 SH 3	CONN DIAG CONTROL PANEL 19R
18	BR 3047	MISC CONN DIAGRAM
17	GE 112C2819 SH.3	CONN DIAG INSTRUMENT RACK RK02
16	GU 3D-642-18-002	ENG SAFEGUARD ACT SYS CONN DIAG
15	GE 8850781	CORE SPRAY SYSTEM FLOW DIAG
14	EM 8397907	DIESEL GEN #2 ELEM DIAG
13	GU 3B-212-17-1001	CORE SPRAY FILL PUMP SYS 4
12	GE 718E644 SH 2	ELEM DIAG - CORE SPRAY CONTROL
11	GE 15786350	CORE SPRAY SYS MCC ELEM DIAG
10	GE 223R0173 SH 16	4160V SYS ELEM DIAG SWGR IC
9	BR 3029 SH 2	D.C. CONTROL ELEM DIAG
8	GU 3E-611-17-004	ELEM DIAG ANNUNCIATOR 'B'
7	GE 118B8328	CORE SPRAY SYS ELEM DIAG 480V USS
6	GE 886D301 SH 1	ELEM DIAG SELEC INPUTS TO PLANT COMPUTER
5	GE 729E182 SH 2	AUTO DEPRESSURIZATION ELEM DIAG
4	GE 237E901 SH 1	ELEM DIAG CONTAINMENT SPRAY
3	GE 223R0173	CORE SPRAY ELEM DIAG PUMP CONTROL
2	GU 3E-611-17-005 SH 1	ELEM DIAG ANNUNCIATOR 'C'
1	NU 5060E6003	CORE SPRAY/RBCCW DRYWELL ISOL ELEM DIAG

REFERENCES

CAD FILE NAME: NU 5060E6003 S4 R12

REVISION 0 OF THIS DRAWING WAS DRAWN FROM NU 5060E6003 SH. 2 REV. 13 & NU 5060E6003 SH. 3 REV. 7

REVISION 10 OF THIS DRAWING WAS TRANSLATED TO AUTOCAD FROM CADAM FILE V3E,642,17,0006,004-,1001

NUCLEAR SAFETY RELATED USE

THIS IS A COMPUTER GENERATED DRAWING DO NOT REVISE IT MANUALLY

GPU NUCLEAR

CORE SPRAY/RBCCW DRYWELL ISOLATION

ELECTRICAL ELEMENTARY DIAGRAM

OYSTER CREEK

DWG. NO. NU 5060E6003 SH. 4 REV. 12

SCALE : NONE

W.A. NO.

DWG. NO. NU 5060E6003 SH. 4

STICK#13

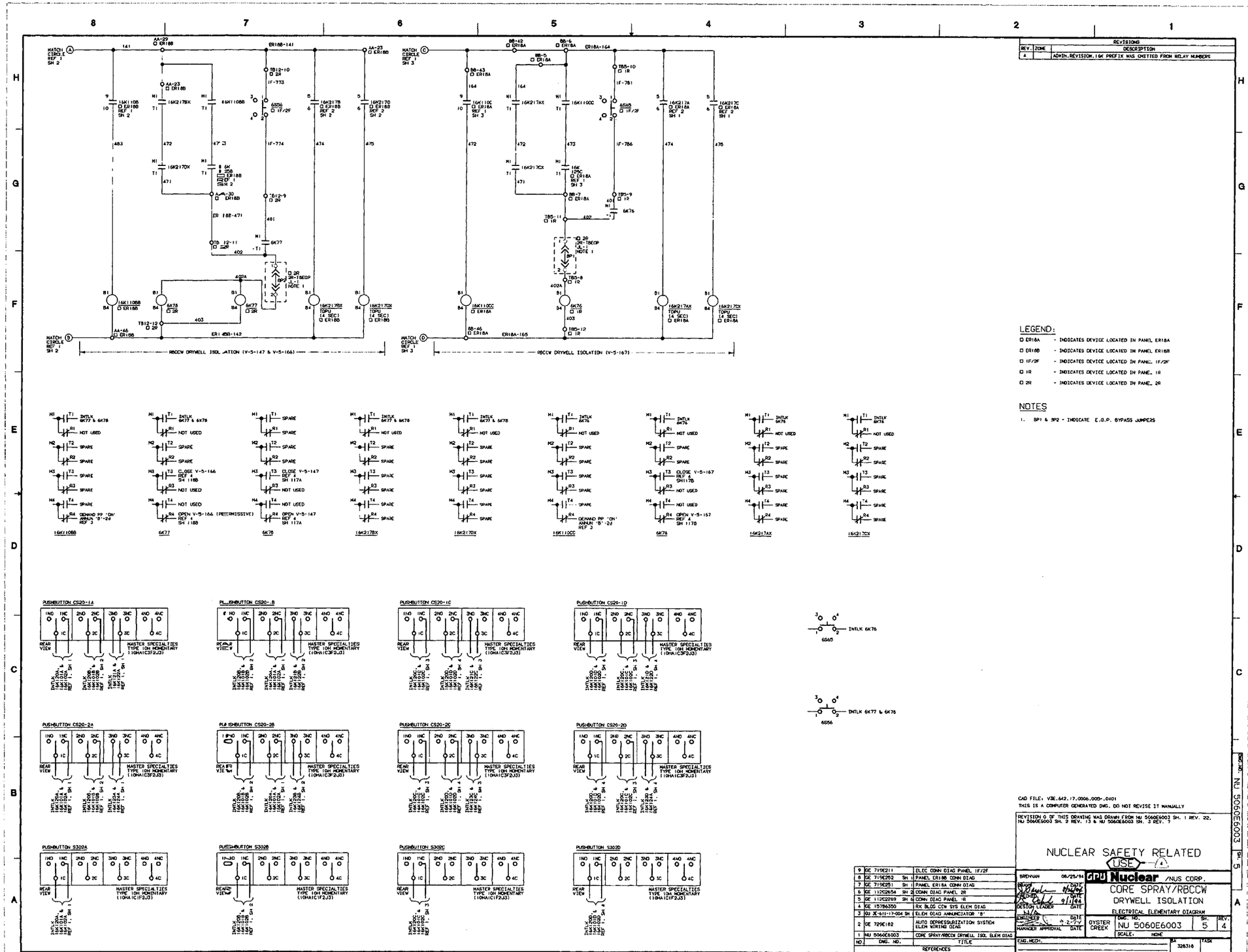

REVISIONS		
REV.	ZONE	DESCRIPTION
4		ADMIN.REVISION.16K PREFIX WAS OMITTED FROM RELAY NUMBERS

LEGEND:

- □ ER18A - INDICATES DEVICE LOCATED IN PANEL ER18A
- □ ER18B - INDICATES DEVICE LOCATED IN PANEL ER18B
- □ 1F/2F - INDICATES DEVICE LOCATED IN PANEL 1F/2F
- □ 1R - INDICATES DEVICE LOCATED IN PANEL 1R
- □ 2R - INDICATES DEVICE LOCATED IN PANEL 2R

NOTES

1. BP1 & BP2 - INDICATE E.O.P. BYPASS JUMPERS

CAD FILE: V3E.642.17.0006.005-.0401
THIS IS A COMPUTER GENERATED DWG. DO NOT REVISE IT MANUALLY

REVISION 0 OF THIS DRAWING WAS DRAWN FROM NU 5060E6003 SH. 1 REV. 22, NU 5060E6003 SH. 2 REV. 13 & NU 5060E6003 SH. 3 REV. 7

NUCLEAR SAFETY RELATED
USE 4

NO.	DWG. NO.	TITLE
9	GE 719E211	ELEC CONN DIAG PANEL 1F/2F
8	GE 719E252 SH 1	PANEL ER18B CONN DIAG
7	GE 719E251 SH 1	PANEL ER18A CONN DIAG
6	GE 112C2654 SH 2	CONN DIAG PANEL 2R
5	GE 112C2269 SH 6	CONN DIAG PANEL 1R
4	GE 157B6350	RX BLDG CCW SYS ELEM DIAG
3	GU JE-611-17-004 SH 1	ELEM DIAG ANNUNCIATOR 'B'
2	GE 729E182	AUTO DEPRESSURIZATION SYSTEM ELEM WIRING DIAG
1	NU 5060E6003	CORE SPRAY/RBCCW DRYWELL ISOL ELEM DIAG

REFERENCES

BRENNAN 08/25/94
DESIGN LEADER DATE
ENGINEER DATE
MANAGER APPROVAL DATE

GPU Nuclear /NUS CORP.

CORE SPRAY/RBCCW
DRYWELL ISOLATION
ELECTRICAL ELEMENTARY DIAGRAM

OYSTER CREEK

DWG. NO.	SH.	REV.
NU 5060E6003	5	4

SCALE: NONE

ENG.MECH.

BA 328318 TASK

STICK #13

DWG. NO. NU 5060E6003 SH. 5

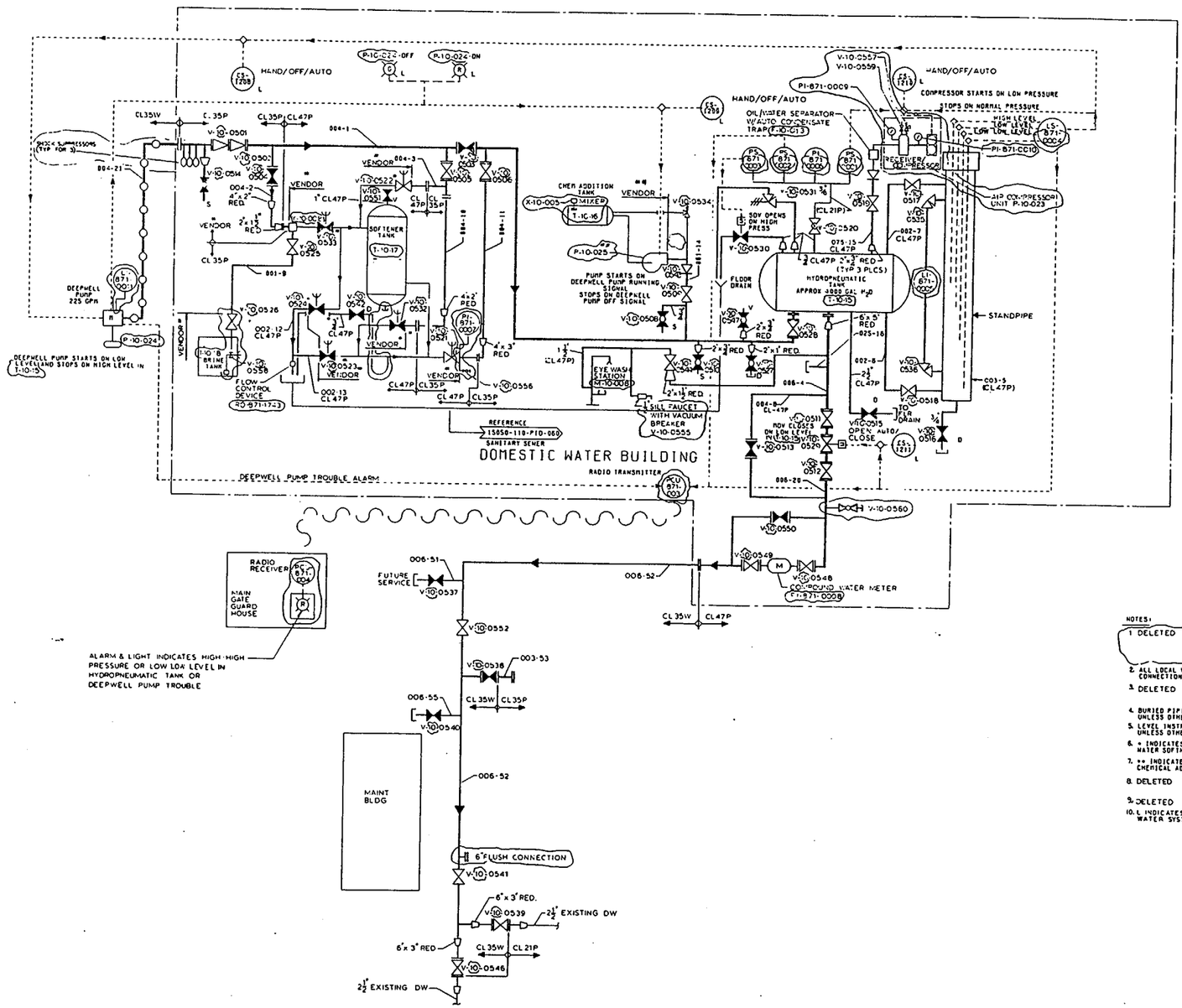

NOTES:

1. DELETED
2. ALL LOCAL VENTS, DRAINS, PRESSURE, AND SAMPLE CONNECTIONS ARE ¾" UNLESS OTHERWISE NOTED.
3. DELETED
4. BURIED PIPING CL 35W UNLESS OTHERWISE NOTED.
5. LEVEL INSTRUMENT CONNECTIONS ARE 1" UNLESS OTHERWISE NOTED.
6. * INDICATES COMPONENT SUPPLIED WITH WATER SOFTNER SYSTEM.
7. ** INDICATES COMPONENT SUPPLIED WITH CHEMICAL ADDITION TANK.
8. DELETED
9. DELETED
10. L INDICATES EQUIPMENT LOCATION AS DOMESTIC WATER SYSTEM CONTROL PANEL.

THIS DRAWING CREATED ELECTRONICALLY

DRAWINGS DIRECTLY AFFECTED BY THIS CONSTRUCTION PACKAGE
—NONE—

REV	ISSUE	DWN BY	CHK BY	ENG	COORDINATION	APPROVED BY AND DATE
6	REVISED VALVE NOS. ADDED AND REVISED EQUIP. NOS. REVISED AIR COMP. UNIT & PIPING AS INDICATED					
5	OPERATION, MAINTENANCE AND CONSTRUCTION REVIEW COMPLETED. ADDED INCOMPLETE WORK LIST (3WL) GEWL REVISION REVISED ARRGT TO AGREE W/ FCR 05083894 0800AQ & FO 05700, REV VALVE Nos PER FCN 082903 FOR CONT SEE ABOVE ITEM					
4						
3	REARRANGED PIPING IN THE ESSF WASHDOWN WATER LINE NO. 023-S4 ADDED VALVE NOS. 540 THRU 543.	RNK	JNR		TLO 7/10/85	
2	ADDED HITS QA CLASSIFICATION AND VALVE NOS. 64 THRU 68. AND NOTE #8. ADDED LINE NO. 3 CLASS. REVISED & REVISED ACCT #'s	RNK	JNR		TLO 7/10/85	
1	OPERATION, MAINTENANCE AND CONSTRUCTION REVIEW COMPLETED. ISSUED FOR CONSTRUCTION.	RNK	TAS PED	Stan/JL RTH	TLO 5/1/85	
0	PRELIMINARY ENGINEERING AND DESIGN REVIEW COMPLETED. ISSUED FOR INFORMATION ONLY.	RNK	PED	JL RTH	TLO 2/25/85	

THE INFORMATION ON THIS DRAWING MAY NOT BE COPIED OR USED FOR OTHER THAN THE CONSTRUCTION, MAINTENANCE OR REPAIR OF THE PLANT FACILITY DESCRIBED IN THE TITLE BLOCK.

NOT WITHIN THE GPUNC QA PLAN SCOPE

STONE & WEBSTER ENG. CORP.
CHERRY HILL, NJ

OYSTER CREEK NUCLEAR GENERATING STATION

NORTH YARD DOMESTIC & POTABLE WATER SYSTEM

SIZE: | TOLERANCES: | SCALE:

DRAWING NO. 15050-110-PID-050 REV 5