REVISIONS		
REV	ZONE	DESCRIPTION
3		ECO C312165

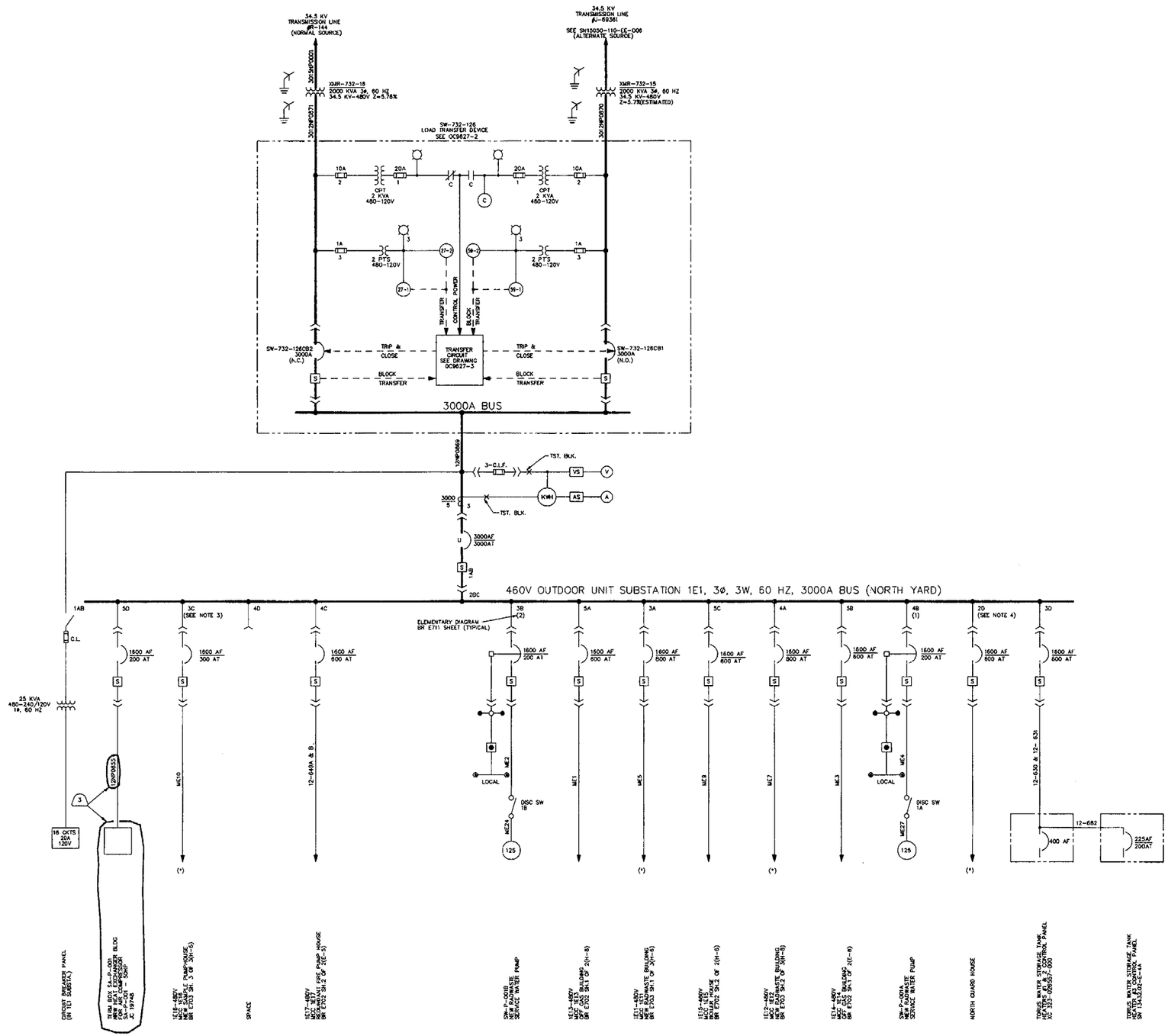

NOTES:

1. SEE DWG. GU3E-700-10-001 FOR SYMBOLS.
2. ALL CIRCUIT BREAKERS IN THE MOTOR CONTROL CENTERS HAVE A 22,000 SYMMETRICAL AMPERE INTERRUPTING RATING.
3. THIS BREAKER IS A POWER SOURCE FOR 1-8 SUMP PUMP FLOW INTEGRATOR, 1-8 SUMP PUMP BOTH RUNNING, DWEDT HI LEVEL & RBEDT HI LEVEL ALARMS.
4. INDICATES BREAKER THAT IS POWER SOURCE FOR NORTH GATE GUARD HOUSE SEWAGE LIFT PUMP.
5. (*) WILL MARK ALL EQUIPMENT NOT VERIFIED DUE TO HIGH RADIATION OR PLANT CONDITIONS.

CAD FILE NAME: BR 3002 S4 R3
REVISION 0 OF THIS DRAWING WAS REDRAWN FROM BR E702, REV. 22.
REVISION 2 OF THIS DRAWING WAS TRANSLATED TO AUTOCAD FROM CADAM FILE V3E737,11,0047,000-,0201

THIS IS A COMPUTER GENERATED DRAWING DO NOT REVISE IT MANUALLY

GPU NUCLEAR/BR

480V (JCP&L) NON-VITAL POWER
ONE LINE DIAGRAM
460V UNIT SUBSTATION 1E1

DRAWN	DATE
G. BARBY	10/15/99
CHECKED	DATE
	11/11/99
DESIGN ENGINEER	DATE
	11/15/99
ENGINEER	DATE
ENGINEERING MANAGER	DATE

OYSTER CREEK

DWG. NO. BR 3002 | SH. 4 OF 4 | REV. 3
SCALE : NONE

BA 328259 | TASK

NO.	DWG. NO.	TITLE
REFERENCES		

DWG. NO. BR 3002 | SH. 4 OF 4

STICK#1

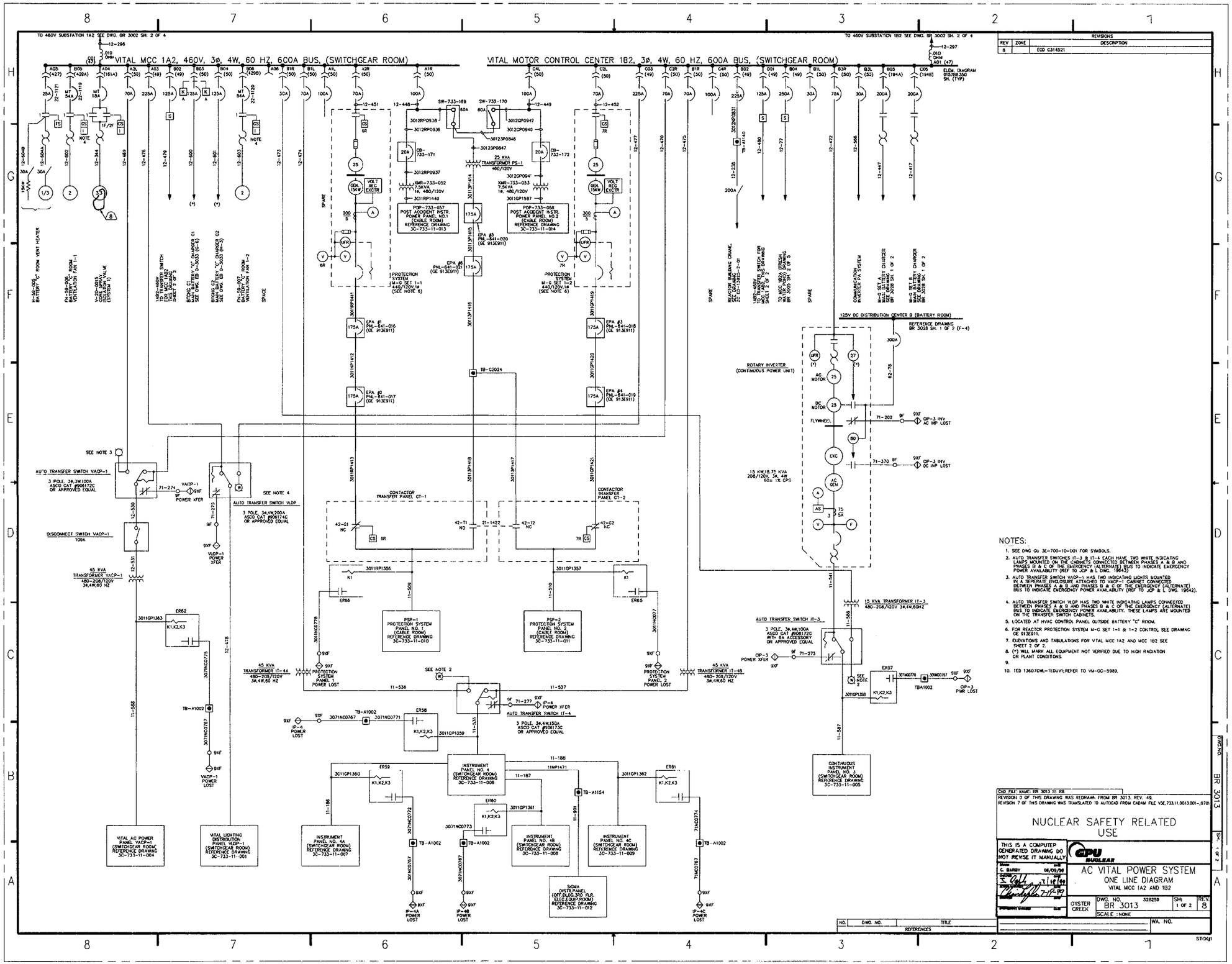

NOTES:

1. SEE DWG GU 3E-700-10-001 FOR SYMBOLS.
2. AUTO TRANSFER SWITCHES IT-3 & IT-4 EACH HAVE TWO WHITE INDICATING LAMPS MOUNTED ON THE CABINETS CONNECTED BETWEEN PHASES A & B AND PHASES B & C OF THE EMERGENCY (ALTERNATE) BUS TO INDICATE EMERGENCY POWER AVAILABILITY (REF TO JCP & L DWG. 196437).
3. AUTO TRANSFER SWITCH VACP-1 HAS TWO INDICATING LIGHTS MOUNTED IN A SEPERATE ENCLOSURE ATTACHED TO VACP-1 CABINET CONNECTED BETWEEN PHASES A & B AND PHASES B & C OF THE EMERGENCY (ALTERNATE) BUS TO INDICATE EMERGENCY POWER AVAILABILITY (REF TO JCP & L DWG. 196442).
4. AUTO TRANSFER SWITCH VLDP HAS TWO WHITE INDICATING LAMPS CONNECTED BETWEEN PHASES A & B AND PHASES B & C OF THE EMERGENCY (ALTERNATE) BUS TO INDICATE EMERGENCY POWER AVAILABILITY. THESE LAMPS ARE MOUNTED ON THE TRANSFER SWITCH CABINETS.
5. LOCATED AT HVAC CONTROL PANEL OUTSIDE BATTERY "C" ROOM.
6. FOR REACTOR PROTECTION SYSTEM M-G SET 1-1 & 1-2 CONTROL SEE DRAWING GE 913E911.
7. ELEVATIONS AND TABULATIONS FOR VITAL MCC 1A2 AND MCC 1B2 SEE SHEET 2 OF 2.
8. (*) WILL MARK ALL EQUIPMENT NOT VERIFIED DUE TO HIGH RADIATION OR PLANT CONDITIONS.
9.
10. TED 136070WL-TEDUV1;REFER TO VM-OC-5989.

REVISIONS		
REV.	ZONE	DESCRIPTION
8		ECO C314521

CAD FILE NAME: BR 3013 S1 R8
REVISION 0 OF THIS DRAWING WAS REDRAWN FROM BR 3013, REV. 49.
REVISION 7 OF THIS DRAWING WAS TRANSLATED TO AUTOCAD FROM CADAM FILE V3E.733.11.0013.001-.0701

NUCLEAR SAFETY RELATED USE

THIS IS A COMPUTER GENERATED DRAWING DO NOT REVISE IT MANUALLY

GPU NUCLEAR

C. BARRY 08/09/96

AC VITAL POWER SYSTEM
ONE LINE DIAGRAM
VITAL MCC 1A2 AND 1B2

OYSTER CREEK | DWG. NO. BR 3013 | 328259 | SH. 1 OF 2 | REV. 8
SCALE : NONE

NO.	DWG. NO.	TITLE
REFERENCES		

WA. NO.

DWG NO. BR 3013 SH. 1 OF 2

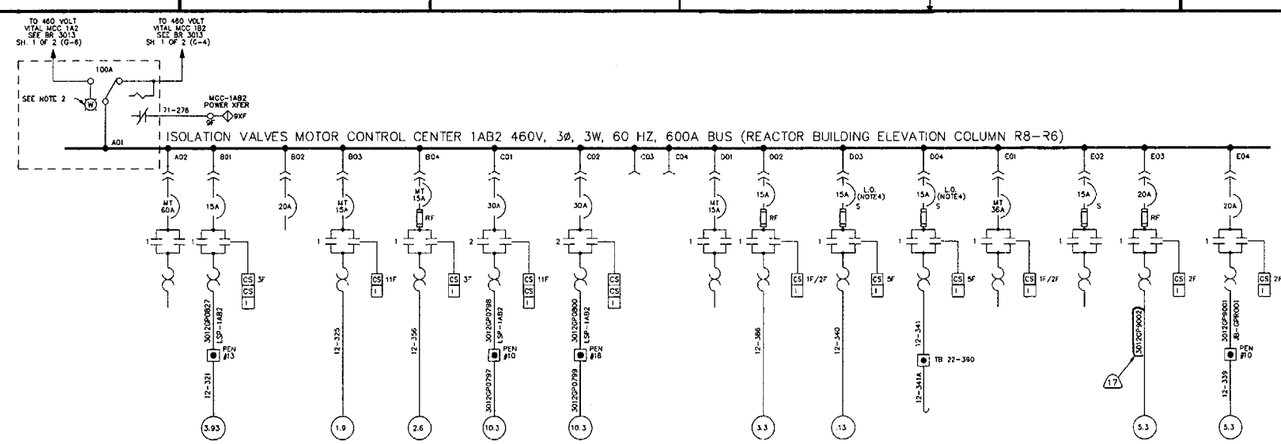

MCC 1AB2

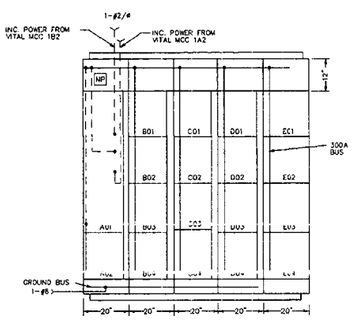

FRONT VIEW

UNIT LOCATION	GE REFERENCE DRAWING 157B6350	
	ELEMENTARY DIAGRAM SHEET	CONNECTION DIAGRAM SHEET
A01	51	416
A02	68	417
B01	174C	417
B02	152B	418
B03	153	418
B04	153	419
C01	157A	419
C02	157B	420
C03		
C04		
D01		
D02	210	422
D03	130A	423
D04	130B	423
E01	58	422
E02	67	425
E03	151A	424
E04	152A	424

NOTES:

1. SEE DWG. GU 3C-700 10-001 FOR SYMBOLS.
2. FOR NOTES, SEE SHEET 1 OF 2.
3. FOR VITAL MCC 1A2 AND 1B2 SEE SHEET 1 OF 2.
4. BREAKERS ARE LOCKED OFF.
5. REFER TO CONNECTION DIAGRAM GU 3C-732-18-1000

MCC 1A2

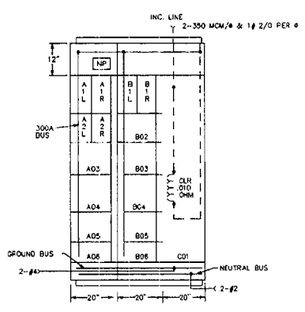

FRONT VIEW

UNIT LOCATION	GE REFERENCE DRAWING 157B6350	
	ELEMENTARY DIAGRAM SHEET	CONNECTION DIAGRAM SHEET
A1L	50	408
A1R	50	408
A2L	50	408
A2R	50	408
A03	49	408
A04	181A	420
A05	427	NOTE 5
A06		
B1L	50	409
B1R	50	409
B02	49	409
B03	50	409
B04	50	409
B05	429A	NOTE 5
B06	429B	NOTE 5
C01		

MCC 1B2

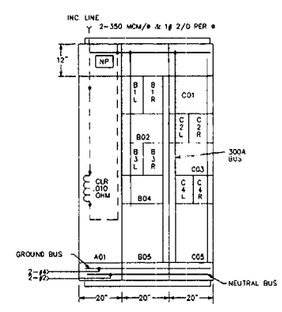

FRONT VIEW

UNIT LOCATION	GE REFERENCE DRAWING 157B6350	
	ELEMENTARY DIAGRAM SHEET	CONNECTION DIAGRAM SHEET
A01	47	412
B1L	50	413
B1R	50	413
B3L	50	415
B3R	50	415
B02	49	414
B04	49	413
B05	194A	410
C4L	50	415
C4R	50	415
C2L	50	414
C2R	50	414
C03	49	415
C01	49	414
C05	194B	410A

REV	ZONE	REVISIONS DESCRIPTION
17		ECD C401123

CAD FILE NAME: BR 3013 S2 R17

REVISION 0 OF THIS DRAWING WAS REDRAWN FROM BR 3013, REV. 46 & GE 157B6350 SH.35 REV.9, SH.36 REV.9, AND SH.37 REV. 11.
REVISION 13 OF THIS DRAWING WAS TRANSLATED TO AUTOCAD FROM CADAM FILE V3E,733,11,0013,002-,1301

NUCLEAR SAFETY RELATED USE

THIS IS A COMPUTER GENERATED DRAWING DO NOT REVISE IT MANUALLY

AmerGen

DRAWN	E.J. MCKEE	01/10/2001
DESIGN ENGINEER		01/10/01
PROJECT ENGINEER		1/11/01
ENGINEERING MANAGER		

AC VITAL POWER SYSTEM
ONE LINE DIAGRAM
VITAL MCC 1AB2, 1A2 & 1B2

OYSTER CREEK

DWG. NO. BR 3013 | SH. 2 OF 2 | REV. 17

SCALE : NONE

NO.	DWG. NO.	TITLE
		REFERENCES

WA. NO.

STICK(1)

SUPERSEDES BR 3013 SH. 2 OF 2

REVISIONS		
REV	ZONE	DESCRIPTION
12		ECO C400002

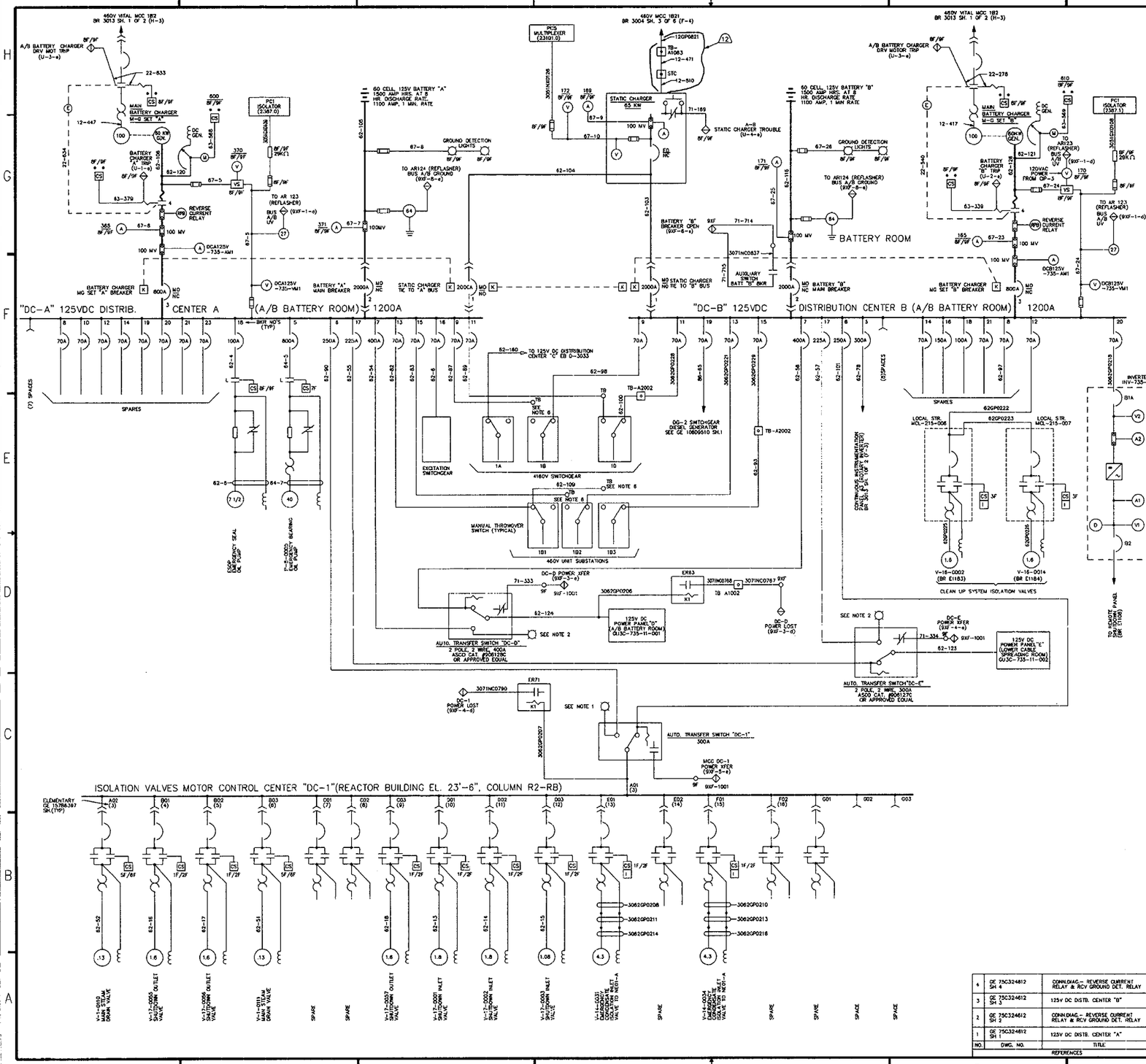

REFERENCES		
NO.	DWG. NO.	TITLE
4	GE 75C324612 SH 4	CONN.DIAG.– REVERSE CURRENT RELAY & RCV GROUND DET. RELAY
3	GE 75C324612 SH 3	125V DC DISTB. CENTER "B"
2	GE 75C324612 SH 2	CONN.DIAG.– REVERSE CURRENT RELAY & RCV GROUND DET. RELAY
1	GE 75C324612 SH 1	125V DC DISTB. CENTER "A"

NOTES:

1. SEE DWG.GU 3C-730-10-001 FOR SYMBOLS.
2. AUTO TRANSFER SWITCHES DC-1, DC-D & DC-E EACH HAVE AN INDICATOR LAMP MOUNTED ON THE OUTSIDE OF THE CABINET CONNECTED BETWEEN THE POSITIVE & NEGATIVE BUSES OF THE EMERGENCY (ALTERNATE) POWER BUS FOR AVAILABILITY INDICATION (REFER TO JCP&L DWG.1185-41)
3. ISOLATION VALVE MOTOR CONTROL CENTER "DC-1" BREAKERS ARE 10,000 AIC AT 250V DC.
4. ALL DISTRIBUTION CENTER A & B INCOMING BREAKERS ARE MANUAL OPERATED (MO).
5. – (E) – DESIGNATES ELECTRICAL INTERLOCK.
6. TERMINAL BLOCKS ARE IN CLOSE PROXIMITY TO MANUAL TRANSFER SWITCHES AND ARE RESERVED FOR ADMINISTRATIVELY CONTROLLED CONNECTION TO ALTERNATE DC SUPPLY.

OPERATING PROCEDURE

WHEN A BATTERY M-G SET IS AUTO STOPPED,ALARM SOUNDS,OPERATOR MUST GO TO THE DC SWITCHGEAR & PERFORM THE FOLLOWING OPERATIONS:

1. OPEN TRIPPED M-G SET DC BREAKER MANUALLY.
2. REMOVE KEY FROM M-G SET DC BREAKER.
3. INSERT KEY IN STATIC CHARGER DC BREAKER ON SAME BUS.
4. CHECK BATTERY BUS VOLTAGE AGAINST STATIC CHARGER OUTPUT VOLTAGE.
5. ADJUST STATIC CHARGER OUTPUT IF REQUIRED.
6. WHEN BUS & STATIC CHARGER VOLTAGES ARE EQUAL CLOSE THE STATIC CHARGER DC BREAKER.

CAD FILE NAME: BR 3028 S1 R13

REVISION 9 OF THIS DRAWING WAS TRANSLATED TO AUTOCAD FROM CADAM FILE V3E.735.11.0005.000--.0901

NUCLEAR SAFETY RELATED USE

THIS IS A COMPUTER GENERATED DRAWING DO NOT REVISE IT MANUALLY

AmerGen

DRAWN E.BRENNAN	DATE 11/14/00	125V STATION DC SYSTEM ONE LINE DIAGRAM 125V DC DISTR. CENTER A & B, MCC DC-1
CHECKED	DATE	
PROJECT ENGINEER	DATE	
ENGINEER	DATE	
ENGINEERING MANAGER	DATE	OYSTER CREEK — DWG. NO. BR 3028 — SH. 1 OF 2 — REV. 12 — SCALE : NONE

WA. NO.

DWG.NO. BR 3028 SH. 1 OF 2

STICK #1

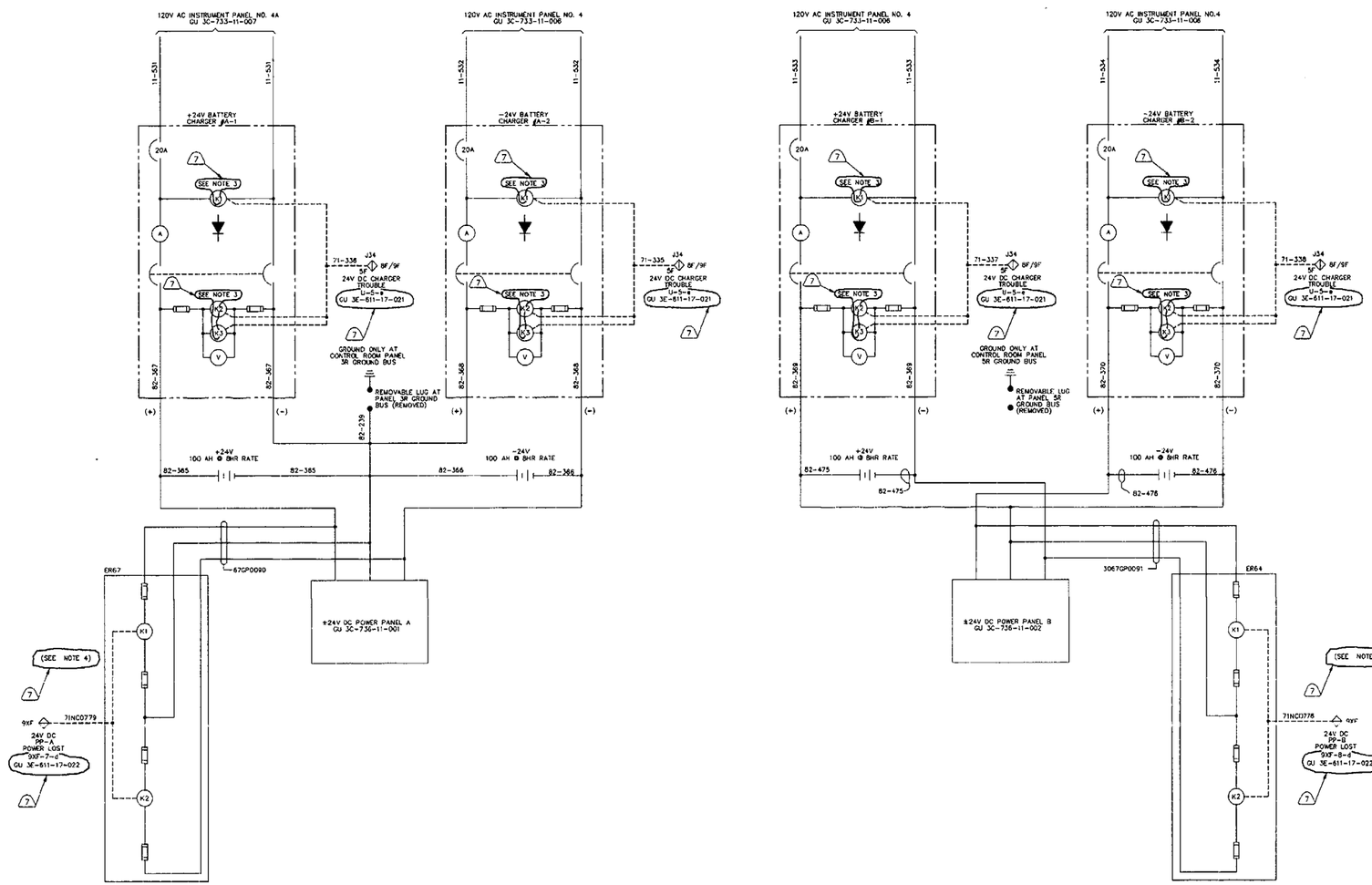

MCC DC-1

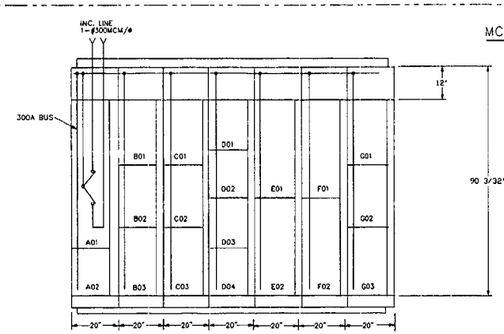

FRONT VIEW

UNIT LOCATION	GE REFERENCE IS 15786397 ELEMENTARY DIAGRAM SHEET	CONNECTION DIAGRAM SHEET
A01	3	19
A02	3	20
B01	4	26
B02	5	26
B03	6	20
B04		
C01	7	27
C02	8	27
C03	9	28
D01	10	21
D02	11	21
D03	12	21
D04		
E01	13	22
E02	14	23
F01	15	24
F02	16	25
G01	17	20
G02		
G03		

REVISIONS

REV	ZONE	DESCRIPTION
7		ECO C314889

NOTES:

1. SEE DWG.GU 3E-700-10-001 FOR SYMBOLS.
2. FOR NOTES SEE SHEET 1 OF 2.
3. CHARGER VOLTAGE RELAYS:
   - K1 AC FAILURE RELAY - ANNUNCIATE
   - K2 DC HIGH VOLTAGE RELAY - ANNUNCIATE
   - K3 DC LOW VOLTAGE RELAY - ANNUNCIATE
4. ER67 VOLTAGE RELAYS
   - K1 & K2 24V DC POWER LOSS

CAD FILE NAME: BR 3028 S2 R7
REVISION 0 OF THIS DRAWING WAS REDRAWN FROM BR 3028, REV.43, GE 15786397 SH 1,REV.7 AND GE 15786397 SH 2,REV.5.
REVISION 3 OF THIS DRAWING WAS TRANSLATED TO AUTOCAD FROM CAD FILE V3E.736.11.0001.000-.0301

NUCLEAR SAFETY RELATED USE

THIS IS A COMPUTER GENERATED DRAWING DO NOT REVISE IT MANUALLY

AmerGen

24V STATION DC SYSTEM
ONE LINE DIAGRAM
BATTERY CHARGERS & MCC DC-1

DRAWN G. BARBY DATE 07/18/2000
CHECKED DATE 09/18/00
DESIGN ENGINEER DATE 9/18/00
ENGINEERING MANAGER DATE

OYSTER CREEK | DWG. NO. BR 3028 | SH. 2 OF 2 | REV. 7
SCALE : NONE

NO.	DWG. NO.	TITLE
REFERENCES		

BA. | WO.

DWG.NO. BR 3028 SH. 2 OF 2

STICK#1

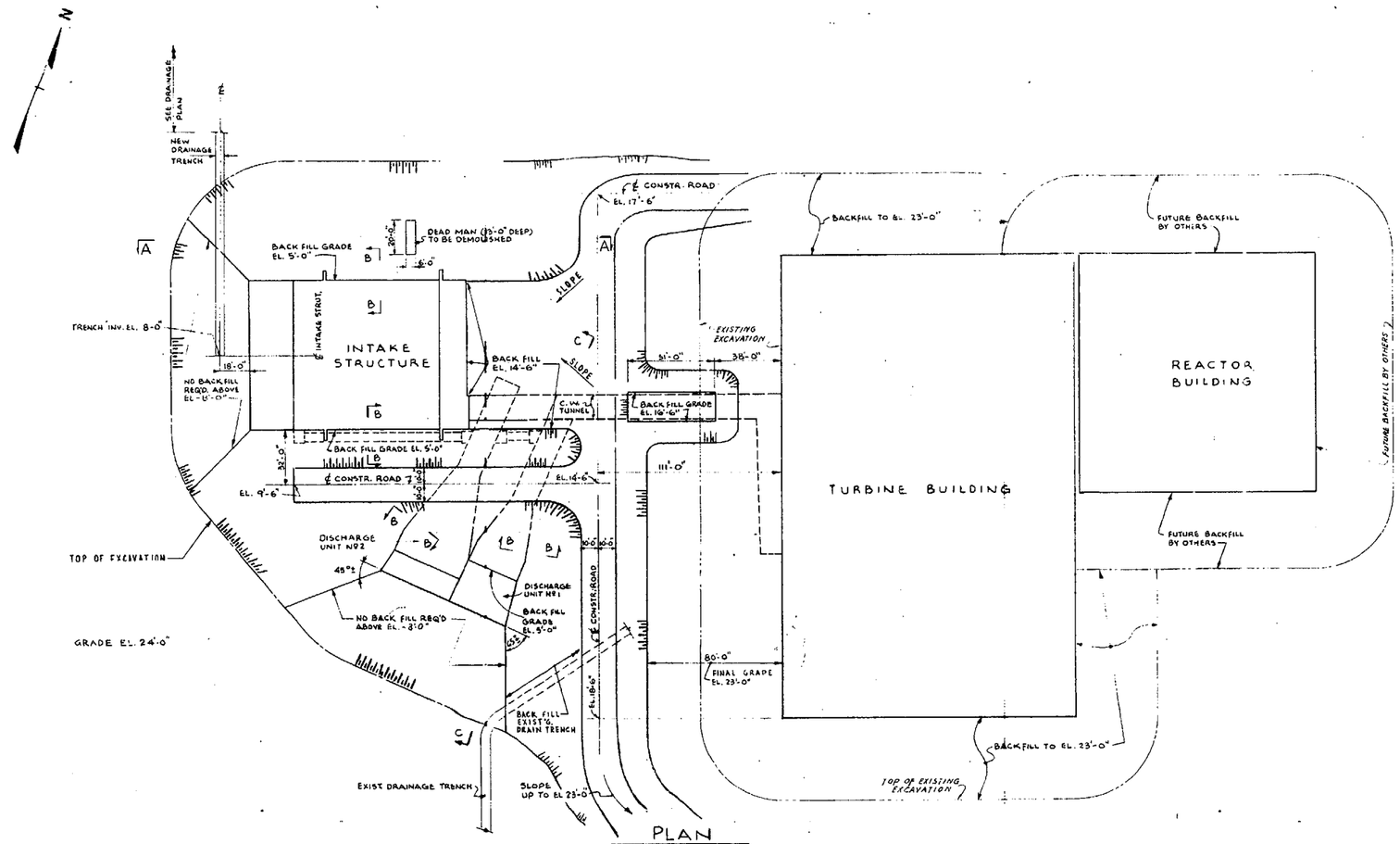

PLAN

SCALE: 1" = 30'-0"

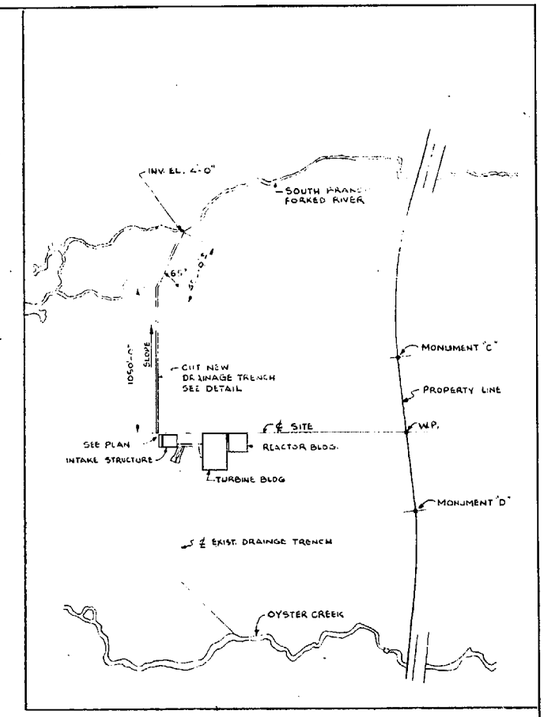

DRAINAGE TRENCH PLAN

SCALE 1" = 400'-0"

NOTES

1. CLAY BACKFILL TO BE PLACED IN 8" MAX LAYERS AND COMPACTED WITH SHEEPSFOOT ROLLER PER SPECS. AND WITH NOT LESS THAN 4 PASSES PER LAYER.
2. SEE DWG 1819 FOR EXISTING CONTOURS, LIMITS OF EXISTING STOCKPILES OF FILL MATERIAL AND WASTE EXCAVATION DISPOSAL AREAS.
3. SEE DWG. 4007 AND EXAMINE SITE FOR EXCAVATION AND BACKFILL PERFORMED BY OTHERS UNDER PREVIOUS SUBCONTRACT.
4. CONSTRUCTION ROAD SURFACING TO BE AS REQUIRED FOR ACCESS FOR CONSTRUCTION OF TURBINE BLDG FOUNDATIONS AND CIRC. WATER SYSTEM STRUCTURES.

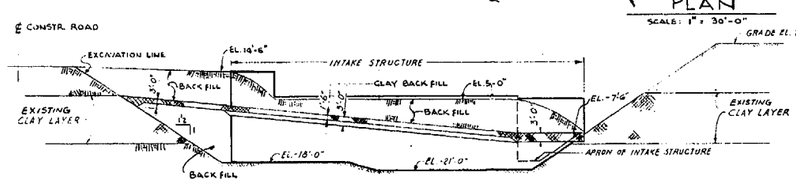

SECTION A-A

SCALE: 1" = 20'-0"

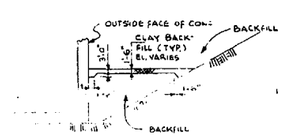

SECTION B-B

SCALE 1" = 20'-0"

TYPICAL DRAINAGE TRENCH

NOT TO SCALE

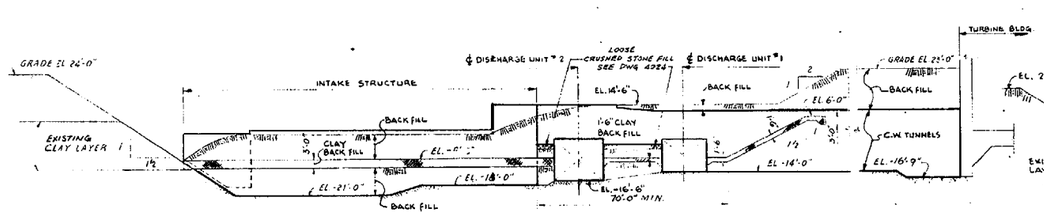

ELEVATION (ALONG FACE OF INTAKE STRUCTURE & C.W. TUNNEL)

SCALE: 1" = 20'-0"

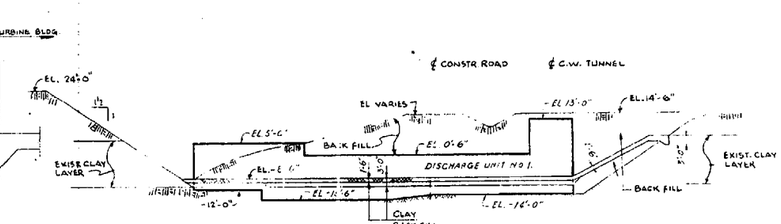

SECTION C-C

SCALE: 1" = 20'-0"

ENG. DES.	ELEC. ENG.	MECH. ENG.	CIVIL ENG.		REV. NO.	REVISION	BY	CHKD.	APP.	DATE	
CLEARED BY			[illegible]		1	REVISED PLAN. REV. TO INCLUDE AS BUILT CHANGES	RC	JRH	HB	4/14/70	
DATE			1-30-65		2	REVIEWED FOR "AS BUILT" CONDITIONS	SB	JC	UD	5/5/70	
CH. DRAFTS REV. BY			[illegible]								

GENERAL ELECTRIC COMPANY
ATOMIC POWER EQUIPMENT DEPT.
SAN JOSE, CALIFORNIA

BURNS AND ROE, INC.
ENGINEERS AND CONSTRUCTORS
NEW YORK, N.Y.

INTAKE & TURBINE AREA EXCAVATION & BACKFILL PLAN & SECTIONS

JERSEY CENTRAL POWER & LIGHT CO.
OYSTER CREEK STATION-UNIT #1

DRAWN BY	C.T. W.W.	SQUAD LEADER	R. S. Parker
TRACED BY			
CHECKED BY	C.D.	DATE 1-29-65	SCALE 1/4" = 1'-0"

APPROVED FOR CONSTRUCTION
R. C. Hungerford Jr.
SR Summerlin for
CHIEF CIVIL ENGINEER

W.O. 2299

DWG. 4006

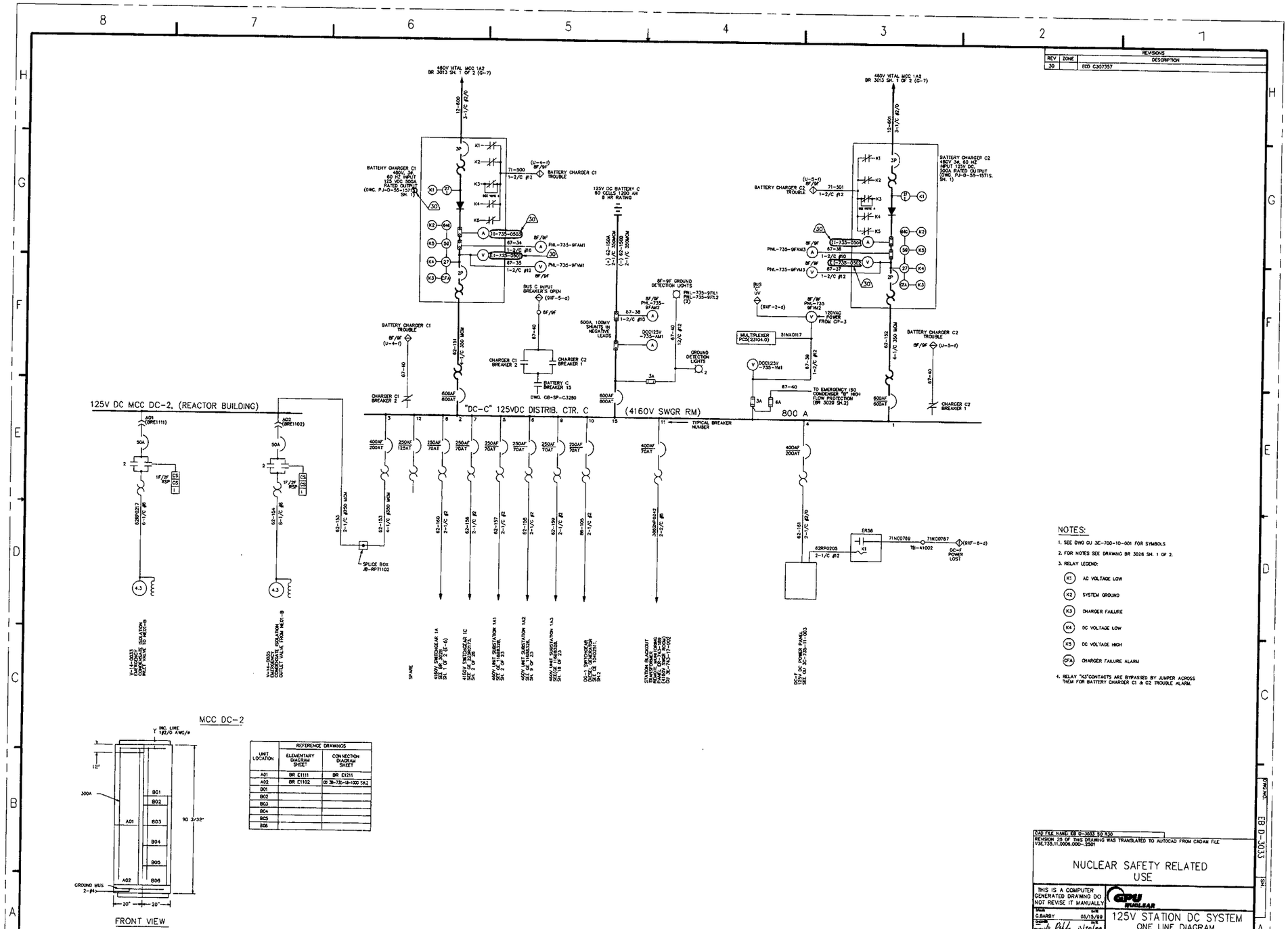

REVISIONS		
REV	ZONE	DESCRIPTION
30		ECD C307357

NOTES:

1. SEE DWG GU 3E-700-10-001 FOR SYMBOLS
2. FOR NOTES SEE DRAWING BR 3026 SH. 1 OF 2.
3. RELAY LEGEND:
   - K1 AC VOLTAGE LOW
   - K2 SYSTEM GROUND
   - K3 CHARGER FAILURE
   - K4 DC VOLTAGE LOW
   - K5 DC VOLTAGE HIGH
   - CFA CHARGER FAILURE ALARM
4. RELAY "K3" CONTACTS ARE BYPASSED BY JUMPER ACROSS THEM FOR BATTERY CHARGER C1 & C2 TROUBLE ALARM.

LIMIT LOCATION	REFERENCE DRAWINGS: ELEMENTARY DIAGRAM SHEET	REFERENCE DRAWINGS: CONNECTION DIAGRAM SHEET
A01	BR E1111	BR E1211
A02	BR E1102	GB 3B-730-18-1000 SH.2
B01		
B02		
B03		
B04		
B05		
B06		

NO.	DWG. NO.	TITLE
2	GB SK-D9079	OUTLINE- 125VDC DISTB. CENTER 'C'
1	GB SP-C3250	SCHEMATIC- 125VDC DISTB. CENTER 'C'

REFERENCES

CAD FILE NAME: EB D-3033 SO R30
REVISION 25 OF THIS DRAWING WAS TRANSLATED TO AUTOCAD FROM CADAM FILE V3E.735.11.0006.000-.2501

NUCLEAR SAFETY RELATED USE

THIS IS A COMPUTER GENERATED DRAWING DO NOT REVISE IT MANUALLY

GPU NUCLEAR

DRAWN C.BARBY DATE 03/15/99
CHECKED 3/20/99
APPROVED 4-5-99

125V STATION DC SYSTEM
ONE LINE DIAGRAM
125V DC DISTR. CENTER C AND MCC DC-2

OYSTER CREEK
DWG. NO. EB D-3033
SH.
REV. 30
SCALE : NONE
W.A. NO.

DWG NO. EB D-3033
SH.

STICK #1

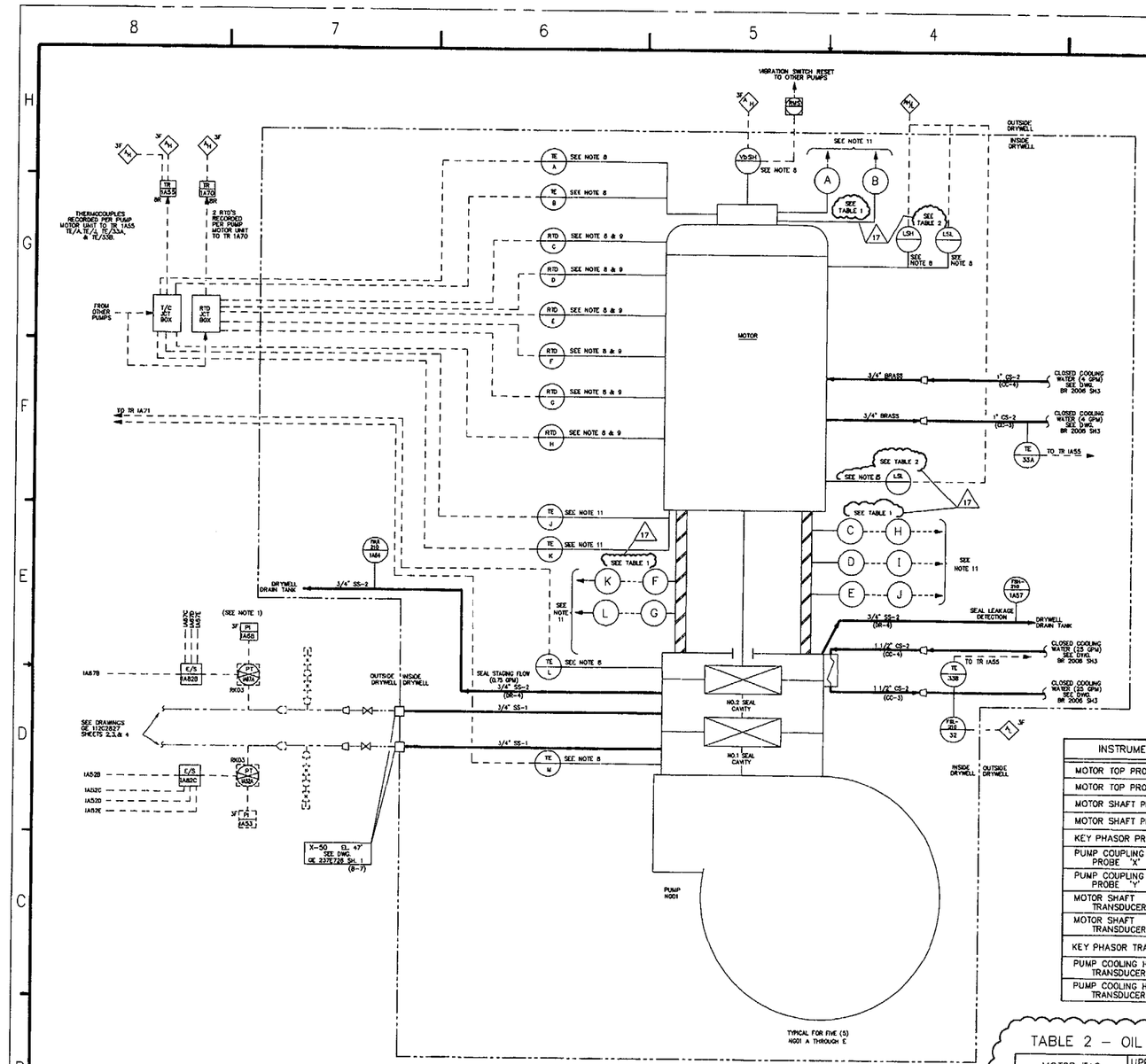

REVISIONS		
REV	ZONE	DESCRIPTION
17	MULTI	ECDC312175

NOTES:

1. CLOSED COOLING WATER SYSTEM TO AND FROM THE RECIRC PUMP AND MOTOR SHALL BE CAPABLE OF CONTINUOUS OPERATION INCLUDING PERIODS OF DRYWELL ISOLATION.
2. THERMOCOUPLES & RESISTANCE TEMP. DETECTORS TE/A THRU 33B TO BE WIRED OUT THROUGH DRYWELL TO T/C & RTD JUNCTION BOXES.
3. FOR EQUIPMENT MARKED 1AXX, SEE REACTOR RECIRC. LOOP 191X882.
4. EQUIP. & INST. NUMBERS ARE PREFIXED BY 210 AND ARE LISTED ON EQUIP. FURNISHED BY A.E. "194X820"
5. DIAGRAM IS TYP. FOR 5 PUMPS.
6. VENTING OF THE AIR OUT OF THE TOP OF THE SEAL HX FOR THE PUMP IS ACCOMPLISHED AT PRESSURE TRANSMITTER PT-1A52.
7. FOR TEST VALVE CONNECTIONS SEE GE 112C2827 SHEETS 2,3, & 4 AND GE 237E798.
8. FURNISHED WITH THE RECIRC. PUMP & MOTOR
9. RTD - RESISTANCE TEMPERATURE DETECTORS
10. FOR VIBRATION MONITORS (RECIRCULATION PUMPS NG01-A,& NG01-D), SEE DWG. GU 30-224-16-1003,A,M3 GU 30-224-16-1001.
11. ALL SIGNALS ARE TRANSMITTED TO NEW COMPUTER CABINET.

LIST OF PUMP & MOT THERMOCOUPLES AND RTD'S

TE/A - THRUST BEARING UPPER FACE
TE/B - THRUST BEARING UPPER FACE, SPARE
RTD/C - MOTOR WINDING "A"
RTD/D - MOTOR WINDING "A", SPARE
RTD/E - MOTOR WINDING "B"
RTD/F - MOTOR WINDING "B", SPARE
RTD/G - MOTOR WINDING "C"
RTD/H - MOTOR WINDING "C", SPARE
TE/J - THRUSTBEARING LOWER FACE
TE/K - THRUSTBEARING LOWER FACE, SPARE
TE/L - #2 SEAL CAVITY
TE/M - #1 SEAL CAVITY
TE/33A - MOT BEARING COOLING WATER
TE/33B - SEAL CAVITY COOLING WATER

SS-1, CS-1	STAINLESS STEEL, CARBON STEEL, APPROX. DESIGN PRESS & TEMP. 1250 PSIG @ 575°
SS-2, CS-2	STAINLESS STEEL, CARBON STEEL, APPROX. DESIGN PRESS & TEMP. 150 PSIG @ 250°

TABLE 1

INSTRUMENT	PUMP NG-01A	PUMP NG-01B	PUMP NG-01C	PUMP NG-01D	PUMP NG-01E
MOTOR TOP PROBE 'X' (A)	VE-224-001A	VE-224-001B	VE-224-001C	VE-224-001D	VE-224-001E
MOTOR TOP PROBE 'Y' (B)	VE-224-002A	VE-224-002B	VE-224-002C	VE-224-002D	VE-224-002E
MOTOR SHAFT PROBE 'X' (C)	VE-224-003A	VE-224-003B	VE-224-003C	VE-224-003D	VE-224-003E
MOTOR SHAFT PROBE 'Y' (D)	VE-224-004A	VE-224-004B	VE-224-004C	VE-224-004D	VE-224-004E
KEY PHASOR PROBE (E)	VE-224-005A	VE-224-005B	VE-224-005C	VE-224-005D	VE-224-005E
PUMP COUPLING HUB PROBE 'X' (F)	VE-224-006A	VE-224-006B	VE-224-006C	VE-224-006D	VE-224-006E
PUMP COUPLING HUB PROBE 'Y' (G)	VE-224-007A	VE-224-007B	VE-224-007C	VE-224-007D	VE-224-007E
MOTOR SHAFT TRANSDUCER 'X' (H)	VT-224-003A	VT-224-003B	VT-224-003C	VT-224-003D	VT-224-003E
MOTOR SHAFT TRANSDUCER 'Y' (I)	VT-224-004A	VT-224-004B	VT-224-004C	VT-224-004D	VT-224-004E
KEY PHASOR TRANSDUCER (J)	VT-224-005A	VT-224-005B	VT-224-005C	VT-224-005D	VT-224-005E
PUMP COOLING HUB TRANSDUCER 'X' (K)	VT-224-006A	VT-224-006B	VT-224-006C	VT-224-006D	VT-224-006E
PUMP COOLING HUB TRANSDUCER 'Y' (L)	VT-224-007A	VT-224-007B	VT-224-007C	VT-224-007D	VT-224-007E

TABLE 2 - OIL LEVEL ALARM SWITCHES

MOTOR TAG	UPPER BRNG LSH	UPPER BRNG LSL	LOWER BRNG LSL
P-37-001 (NG01-A)	LS-223-0001	LS-223-0006	LS-223-0011
P-37-002 (NG01-B)	LS-223-0002	LS-223-0007	LS-223-0012
P-37-003 (NG01-C)	LS-223-0003	LS-223-0008	LS-223-0013
P-37-004 (NG01-D)	LS-223-0004	LS-223-0009	LS-223-0014
P-37-005 (NG01-E)	LS-223-0005	LS-223-0010	LS-223-0015

CAD FILE NAME: GE 107C5339 S1 R17
REVISION 12 OF THIS DRAWING WAS REDRAWN FROM GE 107C5336, REV. 9.
REVISION 16 OF THIS DRAWING WAS TRANSLATED TO AUTOCAD FROM CADAM FILE: V3E,224,21,0100,001-,1601

NO.	DWG. NO.	TITLE
6	GE 148F963	TEMP MONITORING INSTRUMENTATION
5	GE 237E798 SH1	RECIRCULATION SYSTEM F.D.
4	BR 2006 SH3	REACTOR BLDG. CLOSED COOLING WTR. SYS. F.D.
3	BR 2001 SH3	MECHANICAL DRAWING INDEX
2	BR 2001 SH2	ABBREVIATIONS
1	BR 2001 SH1	MECHANICAL SYMBOLS

REFERENCES

THIS IS A COMPUTER GENERATED DRAWING DO NOT REVISE IT MANUALLY

		DATE
DRAWN	NANCY A. CARLSON	3-15-00
CHECKED		3-15-00
PROJECT ENGINEER		3-15-00
CHIEF ENGINEER	N/A	
CONSULTING ENGINEER	N/A	

GPU NUCLEAR

RECIRCULATION PUMPS AND M/G SET
FLOW DIAGRAM

OYSTER CREEK | DWG. NO. GE 107C5339 | SH. 1 OF 1 | REV. 17
SCALE : NONE | PIMS # N/A

DWG.NO. GE 107C5339 SH. 1 OF 1

REVISIONS		
REV	ZONE	DESCRIPTION
50	A,B-4	ECD C314541

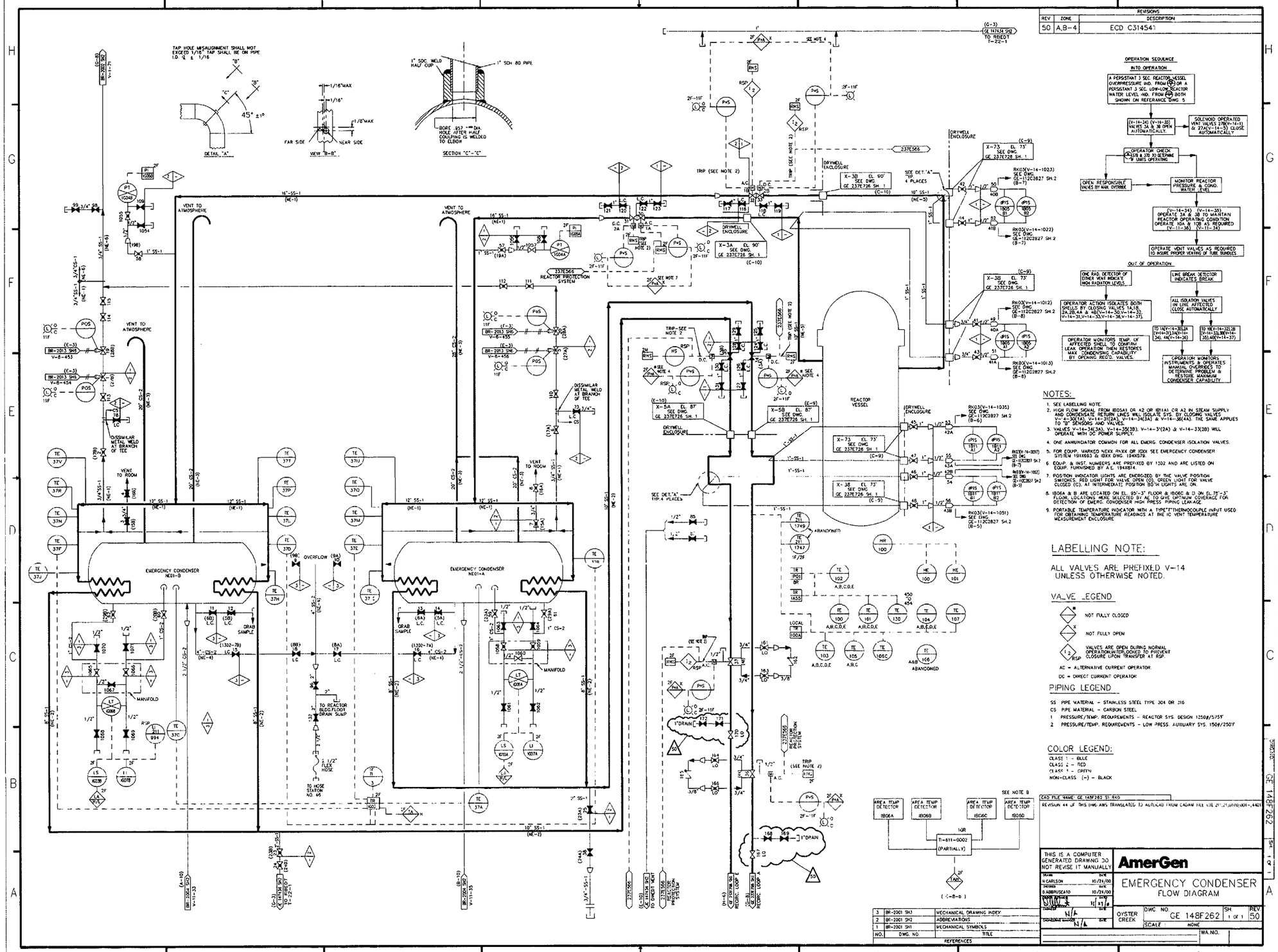

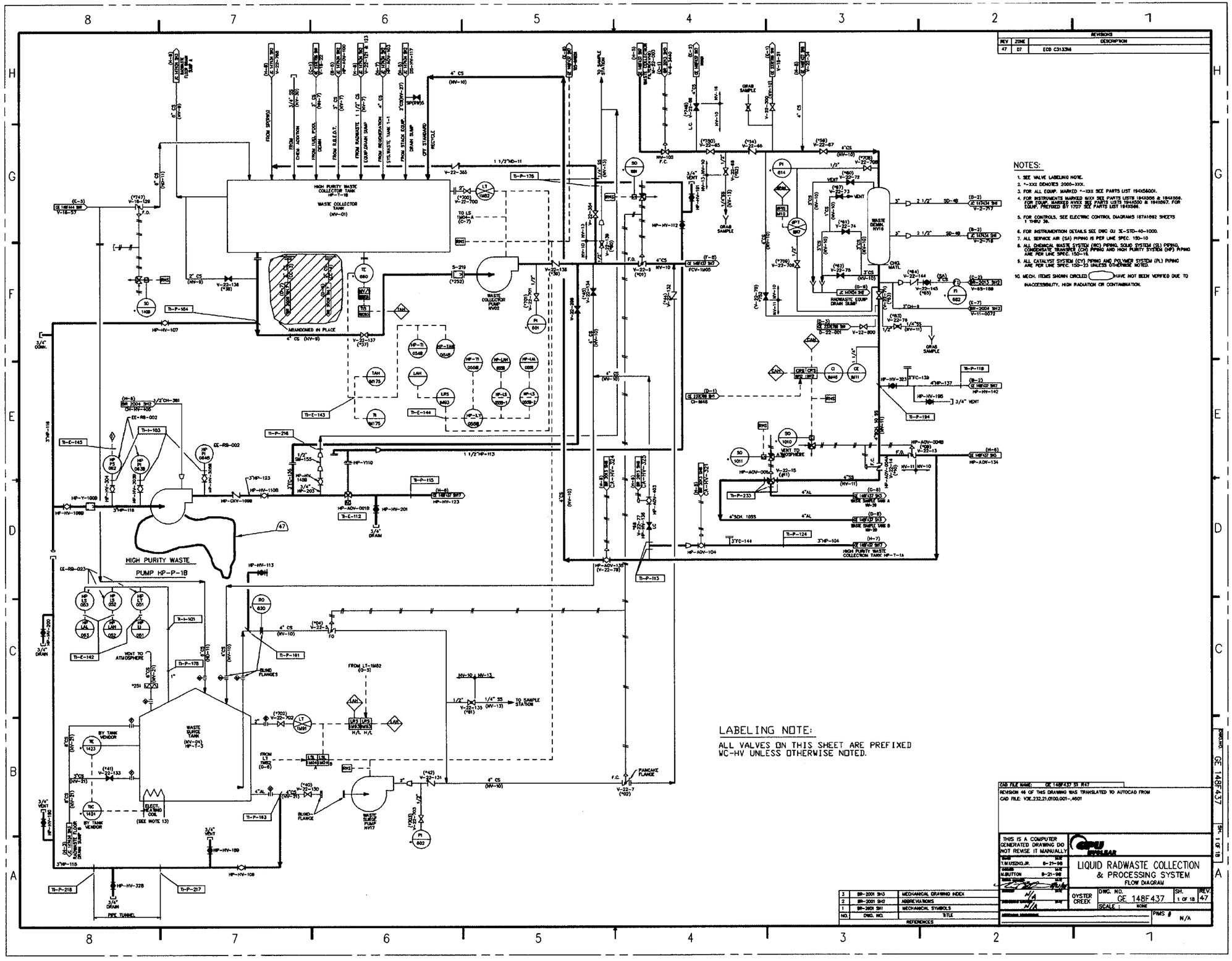

NOTES:

1. SEE VALVE LABELING NOTE.
2. *-XXX DENOTES 2000-XXX.
3. FOR ALL EQUIP. MARKED *-XXX SEE PARTS LIST 1943X5001.
4. FOR INSTRUMENTS MARKED MXX SEE PARTS LISTS 1943X5006 & 1943X5008. FOR EQUIP. MARKED NVXX SEE PARTS LISTS 1943X5007 & 1943X5007. FOR EQUIP. PREFIXED BY 1707 SEE PARTS LIST 1943X5009.
5. FOR CONTROLS, SEE ELECTRIC CONTROL DIAGRAMS 167A1692 SHEETS 1 THRU 38.
6. FOR INSTRUMENTATION DETAILS SEE DWG GU 3E-STD-40-1000.
7. ALL SERVICE AIR (SA) PIPING IS PER LINE SPEC. 150-10
8. ALL CHEMICAL WASTE SYSTEM (WC) PIPING, SOLID SYSTEM (SL) PIPING, CONDENSATE TRANSFER (CH) PIPING AND HIGH PURITY SYSTEM (HP) PIPING ARE PER LINE SPEC. 150-19.
9. ALL CATALYST SYSTEM (CY) PIPING AND POLYMER SYSTEM (PL) PIPING ARE PER LINE SPEC. 150-23 UNLESS OTHERWISE NOTED.
10. MECH. ITEMS SHOWN CIRCLED ⬭ HAVE NOT BEEN VERIFIED DUE TO INACCESSIBILITY, HIGH RADIATION OR CONTAMINATION.

LABELING NOTE:

ALL VALVES ON THIS SHEET ARE PREFIXED WC-HV UNLESS OTHERWISE NOTED.

REV	ZONE	DESCRIPTION
47	D7	ECO C313316

NO.	DWG. NO.	TITLE
3	BR-2001 SH3	MECHANICAL DRAWING INDEX
2	BR-2001 SH2	ABBREVIATIONS
1	BR-2001 SH1	MECHANICAL SYMBOLS

REFERENCES

CAD FILE NAME: GE 148F437 S1 R47

REVISION 46 OF THIS DRAWING WAS TRANSLATED TO AUTOCAD FROM CAD FILE: V3E.232.21.0100.001-.4601

THIS IS A COMPUTER GENERATED DRAWING DO NOT REVISE IT MANUALLY

T.M.USZKO,JR. 8-21-98
M.BUTTON 8-21-98

GPU NUCLEAR

LIQUID RADWASTE COLLECTION & PROCESSING SYSTEM

FLOW DIAGRAM

OYSTER CREEK

DWG. NO. GE 148F437 | SH. 1 OF 18 | REV. 47

SCALE : NONE

PIMS # N/A

DWG.NO. GE 148F437 SH. 1 OF 18

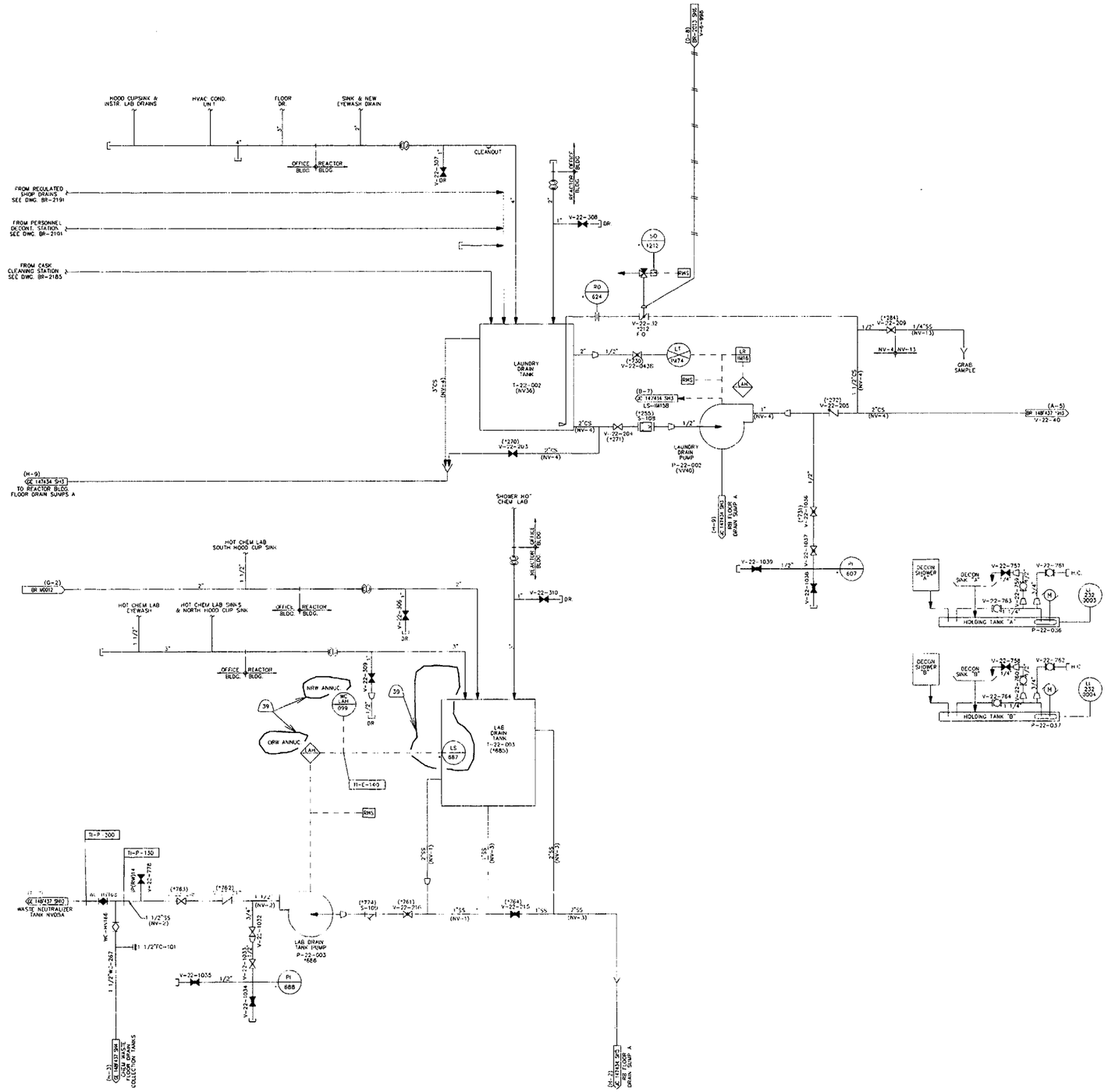

NOTES:

1. SEE SHEET 1 FOR NOTES AND REFERENCES.

REVISIONS		
REV	ZONE	DESCRIPTION
39	C-8	ECDC3-2302

CAD FILE NAME: GE 148F437 S2 R39

REVISION 30 OF THIS DRAWING WAS REDRAWN FROM PART OF GE 148F437 SH2, REV 22 & PART OF BR-M607 REV.17

REVISION 38 OF THIS DRAWING WAS TRANSLATED TO AUTOCAD FROM CADAM FILE: V3E.232.21.0100.002~.3801

THIS IS A COMPUTER GENERATED DRAWING DO NOT REVISE IT MANUALLY

GPU NUCLEAR

LIQUID RADWASTE COLLECTION AND PROCESSING SYSTEM
FLOW DIAGRAM

DRAWN	NANCY A. CARLSON	6-4-98	DATE
CHECKED	H. STANKIEWICZ	6-4-98	DATE
APPROVED	[signature]	6/10/98	DATE
ENGINEERING SUPERVISOR			DATE
MANUFACTURING CONCURRENCE			

OYSTER CREEK

DWG. NO. GE 148F437 | SH. 2 OF 18 | REV. 39

SCALE: NONE

PIMS # N/A

NO.	DWG NO.	TITLE
REFERENCES		

DWG NO. 148F437 SH. 2 OF 18

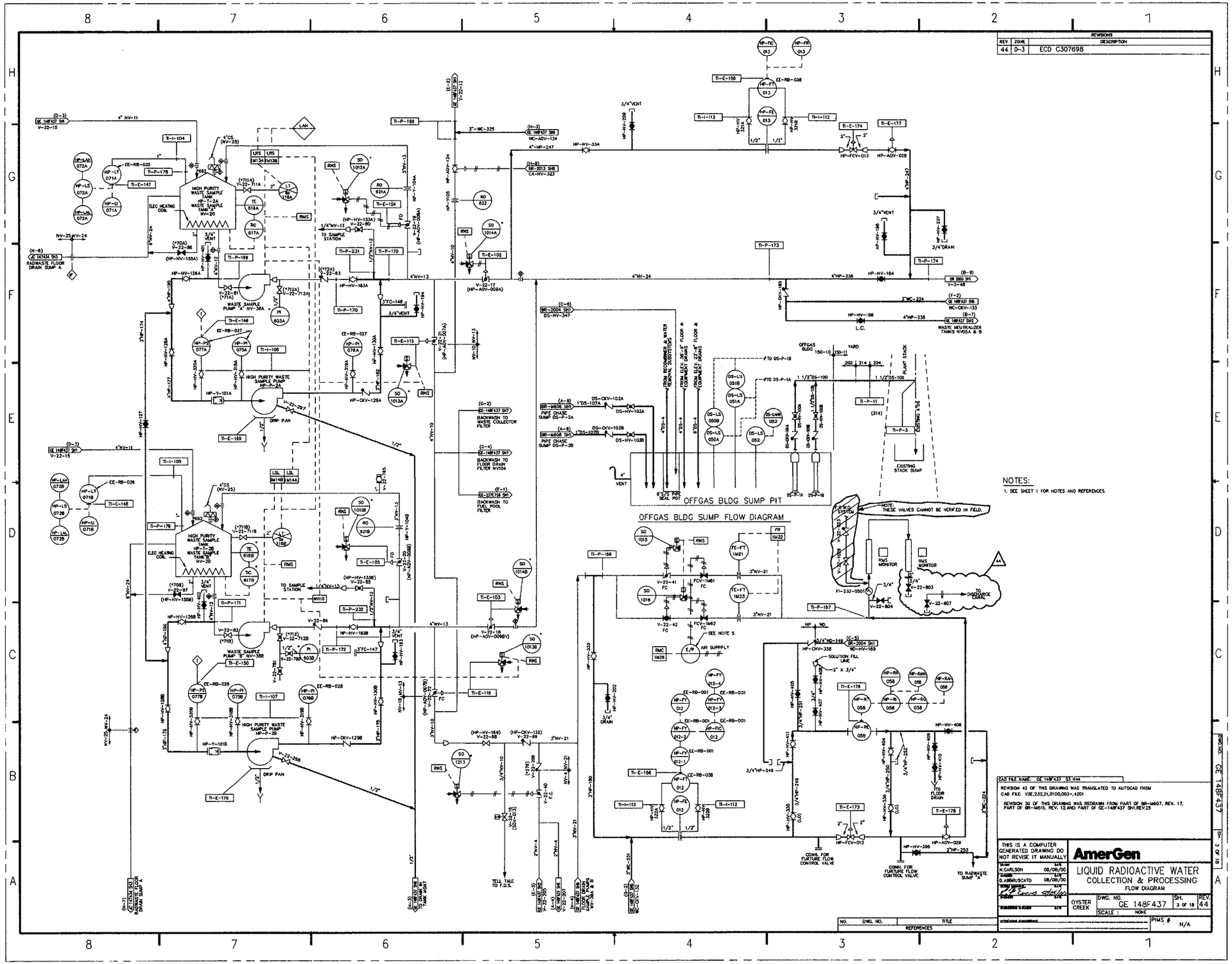

NOTES:

1. SEE SHEET 1 FOR NOTES AND REFERENCES.

REVISIONS		
REV	ZONE	DESCRIPTION
44	D-3	ECD C307698

CAD FILE NAME: GE 148F437 S3 H44

REVISION 42 OF THIS DRAWING WAS TRANSLATED TO AUTOCAD FROM CAD FILE: V3E,232,21,0100,003-,4201

REVISION 30 OF THIS DRAWING WAS REDRAWN FROM PART OF BR-M607, REV. 17, PART OF BR-M615, REV. 12, AND PART OF GE-148F437 SH1,REV.25

THIS IS A COMPUTER GENERATED DRAWING DO NOT REVISE IT MANUALLY

DRAWN: N.CARLSON DATE: 08/08/00
CHECKED: D.ABBRUSCATO DATE: 08/08/00

AmerGen

LIQUID RADIOACTIVE WATER COLLECTION & PROCESSING
FLOW DIAGRAM

OYSTER CREEK

DWG. NO. GE 148F437 | SH. 3 OF 18 | REV. 44

SCALE: NONE

PIMS # N/A

NO.	DWG. NO.	TITLE
REFERENCES		

DWG. NO. GE 148F437 SH. 3 OF 18

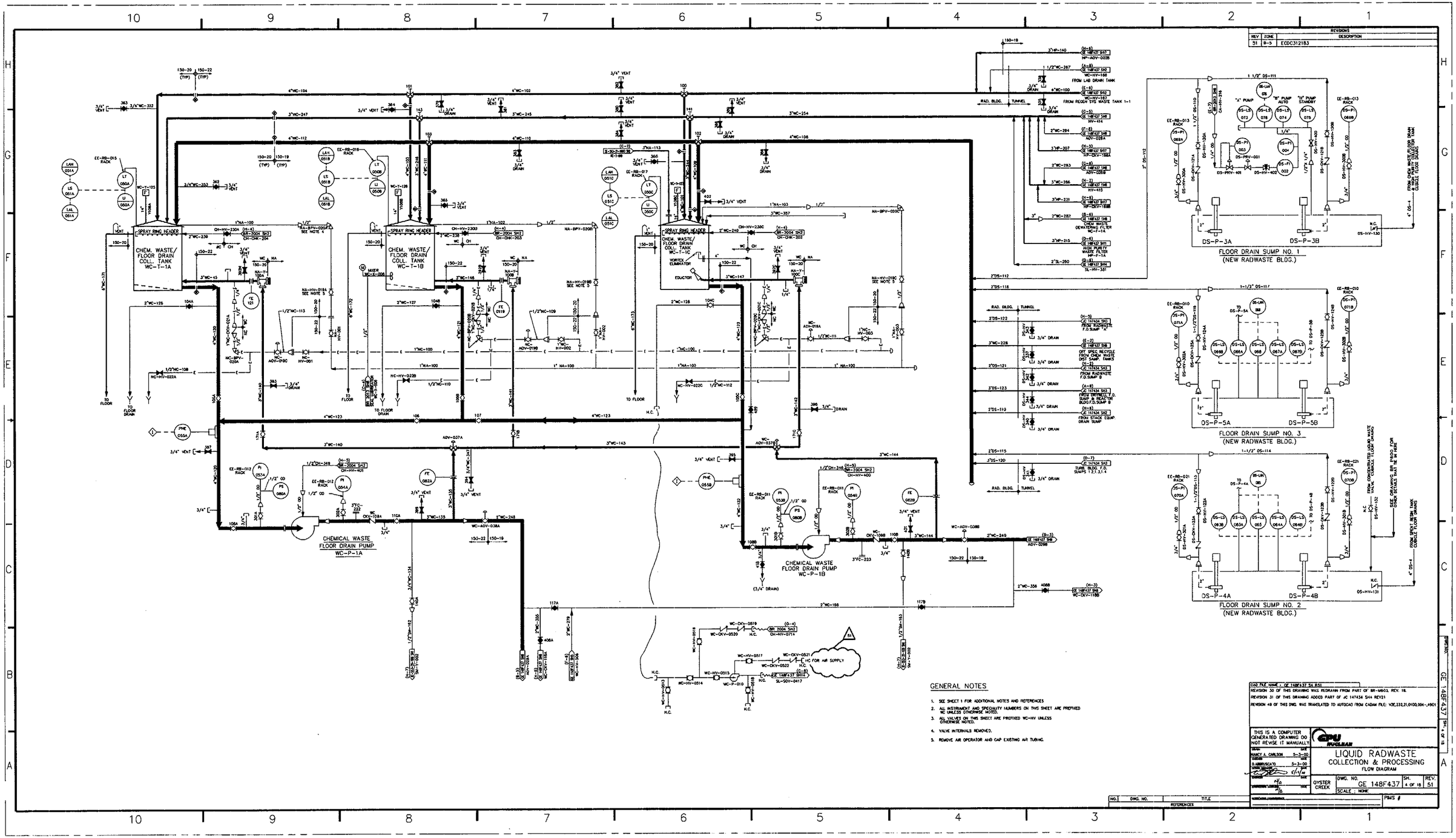

GENERAL NOTES

1. SEE SHEET 1 FOR ADDITIONAL NOTES AND REFERENCES
2. ALL INSTRUMENT AND SPECIALITY NUMBERS ON THIS SHEET ARE PREFIXED WC UNLESS OTHERWISE NOTED.
3. ALL VALVES ON THIS SHEET ARE PREFIXED WC-HV UNLESS OTHERWISE NOTED.
4. VALVE INTERNALS REMOVED.
5. REMOVE AIR OPERATOR AND CAP EXISTING AIR TUBING.

REVISIONS

REV	ZONE	DESCRIPTION
51	B-5	ECDC312183

CAD FILE NAME : GE 148F437 S4 R51

REVISION 30 OF THIS DRAWING WAS REDRAWN FROM PART OF BR-M603, REV. 18.

REVISION 31 OF THIS DRAWING ADDED PART OF JC 147434 SH4 REV21

REVISION 48 OF THIS DWG. WAS TRANSLATED TO AUTOCAD FROM CADAM FILE: VOE,232,21,0100,004-,4901

THIS IS A COMPUTER GENERATED DRAWING DO NOT REVISE IT MANUALLY

GPU NUCLEAR

LIQUID RADWASTE COLLECTION & PROCESSING FLOW DIAGRAM

OYSTER CREEK

DWG. NO. GE 148F437 | SH. 4 OF 18 | REV. 51

SCALE : NONE

PIMS #

NO.	DWG. NO.	TITLE
REFERENCES		

DWG NO. GE 148F437 SH. 4 OF 18

REVISIONS		
REV	ZONE	DESCRIPTION
46	F-2	ECD C312244

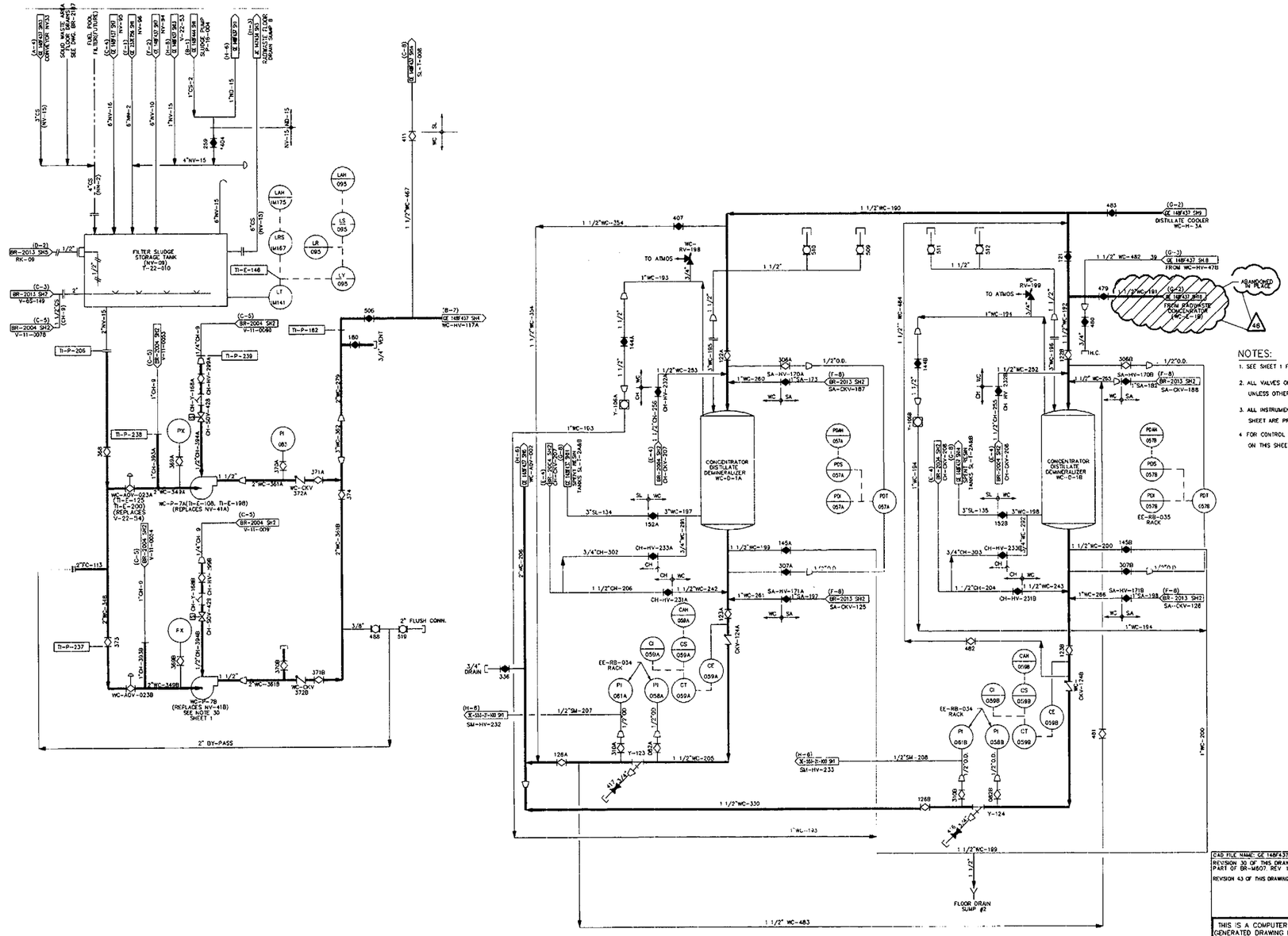

NOTES:

1. SEE SHEET 1 FOR ADDITIONAL NOTES AND REFERENCES.
2. ALL VALVES ON THIS SHEET ARE PREFIXED WC-HV UNLESS OTHERWISE NOTED.
3. ALL INSTRUMENT & SPECIALITY NUMBERS ON THIS SHEET ARE PREFIXED WC UNLESS OTHERWISE NOTED.
4. FOR CONTROL AIR PIPING TO ALL AIR OPERATED VALVES ON THIS SHEET SEE DWG. BR 2013 SHT. 9 & 10.

CAD FILE NAME: GE 148F437 SS R46

REVISION 30 OF THIS DRAWING WAS REDRAWN FROM PART OF BR-M603, REV. 17, PART OF BR-M607, REV. 17, & PART OF GE 148F437 SH3, REV 11.

REVISION 43 OF THIS DRAWING WAS TRANSLATED TO AUTOCAD FROM CADAM FILE V3E,232,21,0100,005-,4301

THIS IS A COMPUTER GENERATED DRAWING DO NOT REVISE IT MANUALLY

DRAWN: NANCY A. CARLSON — DATE: 11-4-2000

CHECKED: D. ABBRUSCATO — DATE: 12-28-2000

DESIGN APPROVED: — DATE: 1/26/2001

PROJECT: N/A — DATE:

ENGINEERING MANAGER: N/A — DATE:

AmerGen

LIQUID RADWASTE COLLECTION & PROCESSING FLOW DIAGRAM

OYSTER CREEK

DWG. NO. GE 148F437 — SH. 5 OF 18 — REV. 46

SCALE: NONE

PIMS # N/A

NO.	DWG. NO.	TITLE
REFERENCES		

DWG. NO. GE 148F437 SH. 5 OF 18

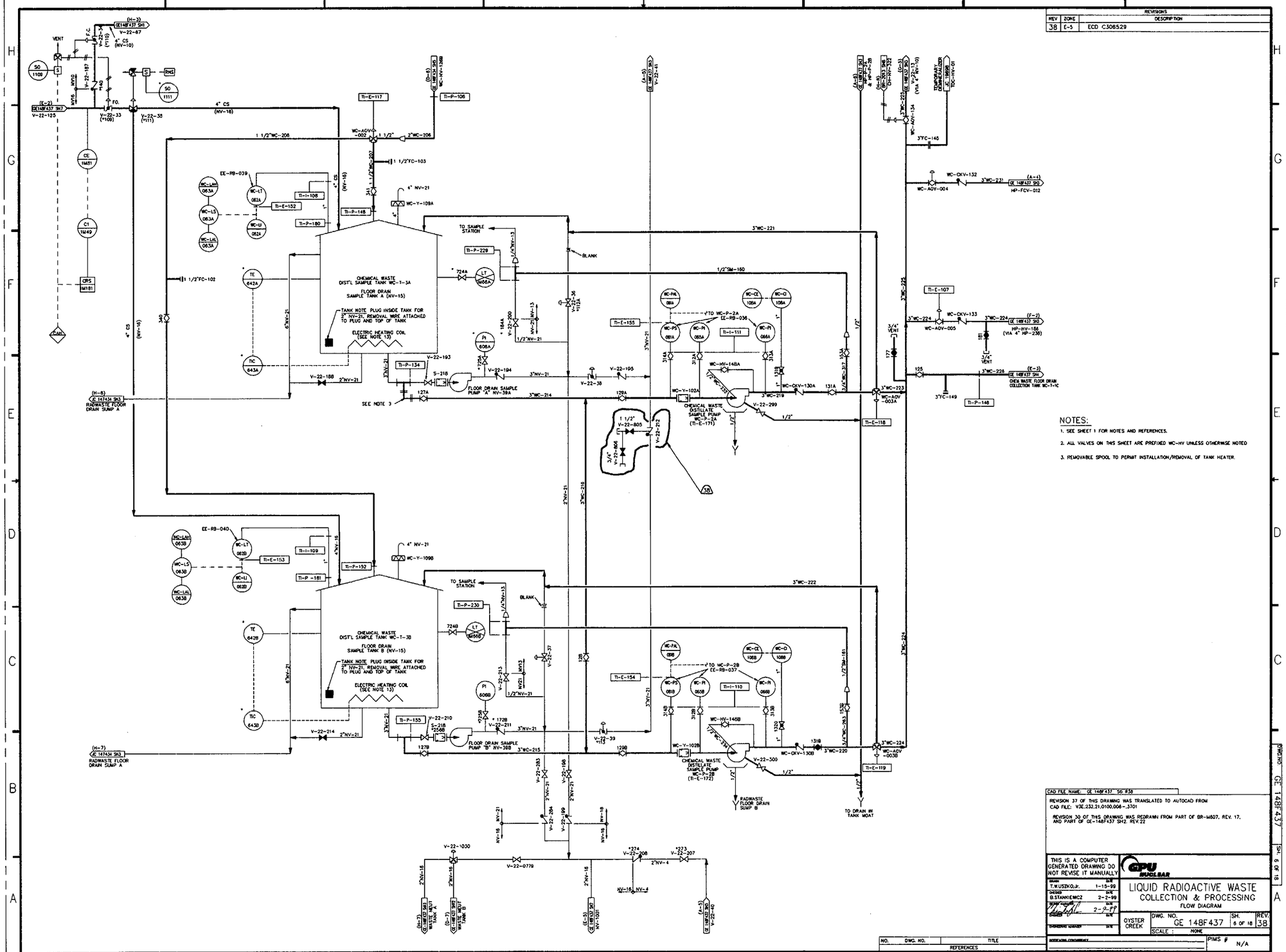

REVISIONS		
REV	ZONE	DESCRIPTION
38	E-5	ECD C306529

NOTES:

1. SEE SHEET 1 FOR NOTES AND REFERENCES.
2. ALL VALVES ON THIS SHEET ARE PREFIXED WC-HV UNLESS OTHERWISE NOTED
3. REMOVABLE SPOOL TO PERMIT INSTALLATION/REMOVAL OF TANK HEATER.

CAD FILE NAME: GE 148F437 SG #38

REVISION 37 OF THIS DRAWING WAS TRANSLATED TO AUTOCAD FROM CAD FILE: V3E.232.21.0100.006-.3701

REVISION 30 OF THIS DRAWING WAS REDRAWN FROM PART OF BR-M607, REV. 17, AND PART OF GE-148F437 SH2, REV.22

THIS IS A COMPUTER GENERATED DRAWING DO NOT REVISE IT MANUALLY

DRAWN T.W.USZKO,Jr.	DATE 1-15-99
CHECKED B.STANKIEWICZ	DATE 2-2-99
DESIGN ENGINEER	DATE 2-9-99
ENGINEERING MANAGER	DATE

GPU NUCLEAR

LIQUID RADIOACTIVE WASTE COLLECTION & PROCESSING
FLOW DIAGRAM

OYSTER CREEK

DWG. NO. GE 148F437 | SH. 6 OF 18 | REV. 38

SCALE : NONE

PIMS # N/A

NO.	DWG. NO.	TITLE
REFERENCES		

DWG.NO. GE 148F437 SH. 6 OF 18

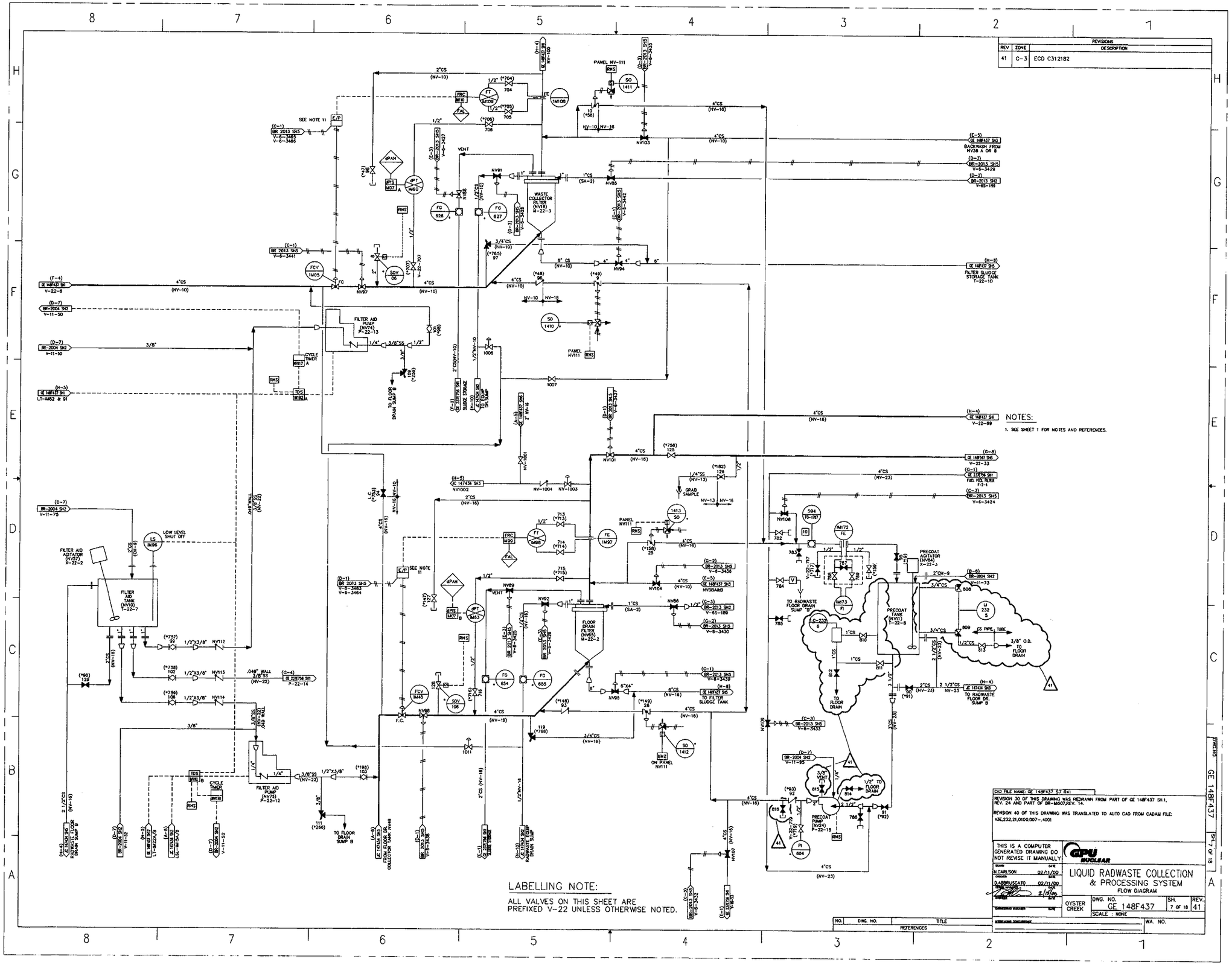

REVISIONS
REV | ZONE | DESCRIPTION
41 | C-3 | ECO C312182
NOTES:
1. SEE SHEET 1 FOR NOTES AND REFERENCES.
LABELLING NOTE:
ALL VALVES ON THIS SHEET ARE PREFIXED V-22 UNLESS OTHERWISE NOTED.
WASTE COLLECTOR FILTER (NV18) M-22-3
FILTER AID PUMP (NV74) P-22-13
FILTER AID TANK (NV10) T-22-7
FILTER AID AGITATOR (NV57) X-22-2
FILTER AID PUMP (NV75) P-22-12
FLOOR DRAIN FILTER (NV65) M-22-2
PRECOAT AGITATOR (NV64) X-22-3
PRECOAT TANK (NV11) T-22-8
PRECOAT PUMP (NV24) P-22-15
FILTER SLUDGE STORAGE TANK T-22-10
BACKWASH FROM NV38 A OR B
TO FLOOR DRAIN SUMP B
TO RADWASTE FLOOR DRAIN SUMP "B"
TO FILTER SLUDGE TANK
TO FLOOR DRAIN
CAD FILE NAME: GE 148F437 S7 R41
REVISION 30 OF THIS DRAWING WAS REDRAWN FROM PART OF GE 148F437 SH.1, REV. 24 AND PART OF BR-M607,REV. 14.
REVISION 40 OF THIS DRAWING WAS TRANSLATED TO AUTO CAD FROM CADAM FILE: V3E,232,21,0100,007-,4001
THIS IS A COMPUTER GENERATED DRAWING DO NOT REVISE IT MANUALLY
GPU NUCLEAR
LIQUID RADWASTE COLLECTION & PROCESSING SYSTEM
FLOW DIAGRAM
OYSTER CREEK
DWG. NO. GE 148F437
SH. 7 OF 18
REV. 41
SCALE : NONE
WA. NO.
NO. | DWG. NO. | TITLE
REFERENCES

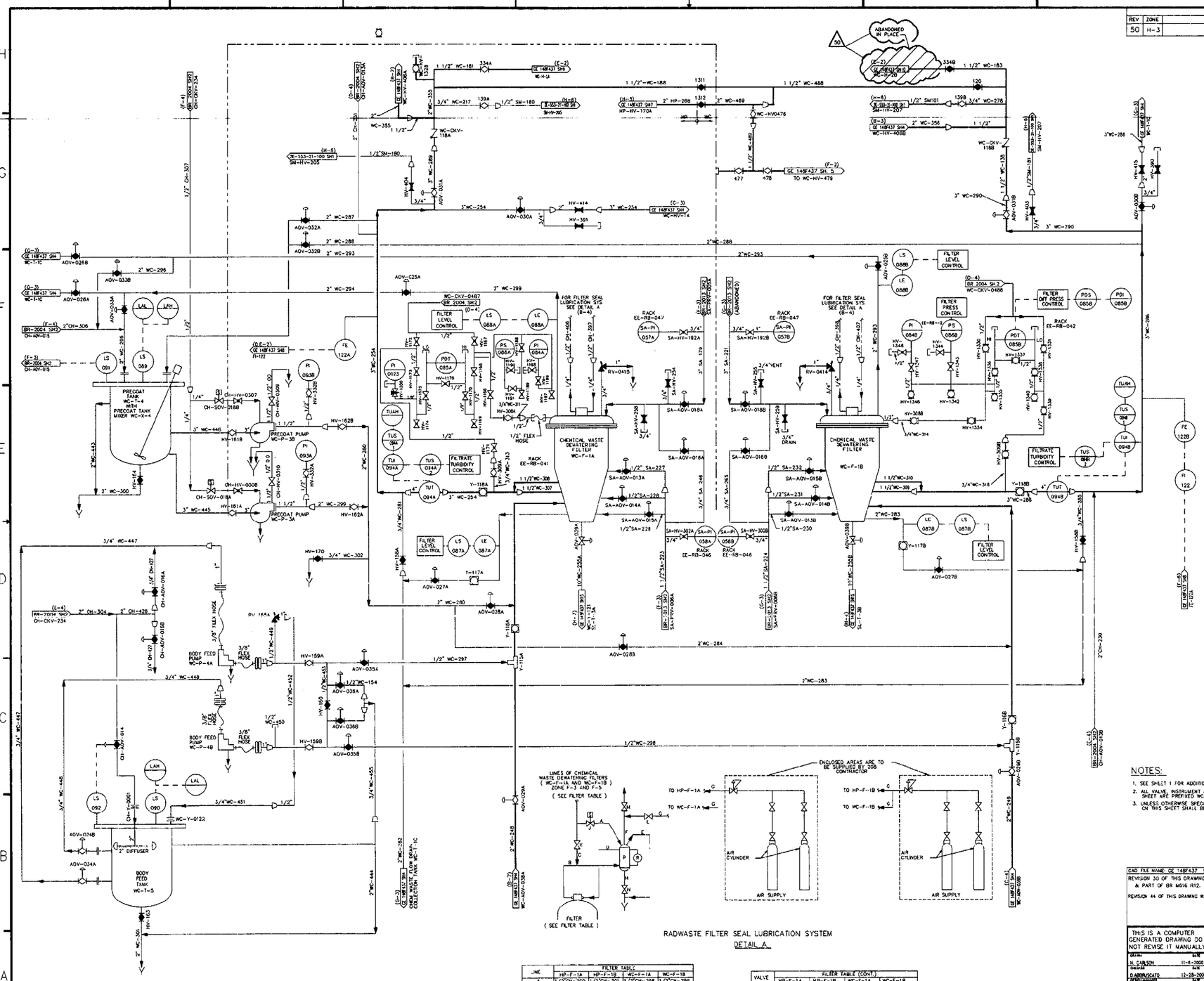

RADWASTE FILTER SEAL LUBRICATION SYSTEM

DETAIL A

LINE	FILTER TABLE			
	HP-F-1A	HP-F-1B	WC-F-1A	WC-F-1B
A	1/2"CH-300	1/2"CH-301	1/2"CH-298	1/2"CH-299
B	1/2"CH-395	1/2"CH-396	1/2"CH-397	1/2"CH-398
C	1/2"CH-400	1/2"CH-401	1/2"CH-402	1/2"CH-403
D	1/2"CH-404	1/2"CH-405	1/2"CH-406	1/2"CH-407
E	1/2"CH-408	1/2"CH-409	1/2"CH-410	1/2"CH-411
F	1/2"CH-412	1/2"CH-413	1/2"CH-414	1/2"CH-415
G	1/2"AP-100	1/2"AP-102	1/2"AP-101	1/2"AP-103
H	1/2"CH-416	1/2"CH-417	1/2"CH-418	1/2"CH-419

VALVE	FILTER TABLE (CONT.)			
	HP-F-1A	HP-F-1B	WC-F-1A	WC-F-1B
J	CH-SOV-24A	CH-SOV-24B	CH-SOV-25A	CH-SOV-025B
K	CH-HV-419A	CH-HV-419B	CH-HV-420A	CH-HV-420B
L	AP-HV-100A	AP-HV-100B	AP-HV-101A	AP-HV-101B
M	CH-HV-421A	CH-HV-421B	CH-HV-422A	CH-HV-422B
N	CH-HV-423A	CH-HV-423B	CH-HV-424A	CH-HV-424B
P	HP-Y-1A	HP-Y-1B	WC-Y-2A	WC-Y-2B
R	CH-LS-047A	CH-LS-047B	CH-LS-048A	CH-LS-048B

NO.	DWG. NO.	TITLE
REFERENCES		

NOTES:

1. SEE SHEET 1 FOR ADDITIONAL NOTES AND REFERENCES.
2. ALL VALVE, INSTRUMENT AND SPECIALTY NUMBERS ON THIS SHEET ARE PREFIXED WC UNLESS OTHERWISE NOTED.
3. UNLESS OTHERWISE SPECIFIED ALL VENT AND DRAIN VALVES ON THIS SHEET SHALL BE 3/4" CLOSE.

CAD FILE NAME: GE 148F437 SB R50

REVISION 30 OF THIS DRAWING WAS REDRAWN FROM BR M724 R2, PART OF BR M603 R17, & PART OF BR M616 R12.

REVISION 44 OF THIS DRAWING WAS TRANSLATED TO AUTOCAD FROM CAD FILE:VOL232,21,0100,008-,440P

THIS IS A COMPUTER GENERATED DRAWING DO NOT REVISE IT MANUALLY

DRAWN: N. CARLSON DATE: 11-8-2000
CHECKED: D. ABBRUSCATO DATE: 12-28-2000
DESIGN ENGINEER: DATE: 1/5/2001
ENGINEERING MANAGER: N/A DATE: N/A
RESPONSIBLE CONSULTANCE

AmerGen

LIQUID RADWASTE COLLECTION & PROCESSING SYSTEM

FLOW DIAGRAM

OYSTER CREEK

DWG. NO. GE 148F437 SH. 8 OF 18 REV. 50

SCALE : NONE

PIMS # N/A

DWG. NO. GE 148F437 SH. 8 OF 18

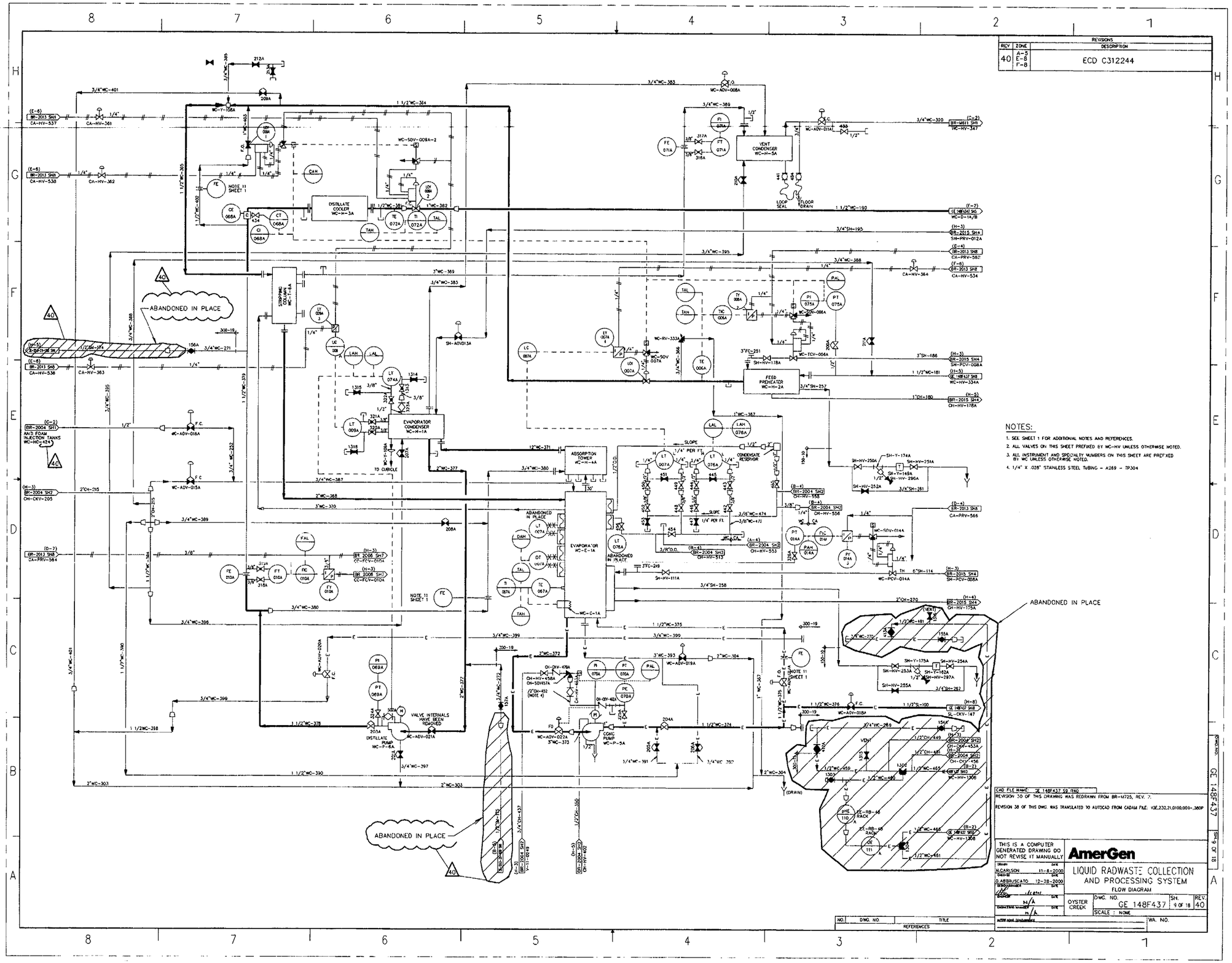

REVISIONS		
REV	ZONE	DESCRIPTION
40	A-5 E-8 F-8	ECD C312244

NOTES:

1. SEE SHEET 1 FOR ADDITIONAL NOTES AND REFERENCES.
2. ALL VALVES ON THIS SHEET PREFIXED BY WC-HV UNLESS OTHERWISE NOTED.
3. ALL INSTRUMENT AND SPECIALTY NUMBERS ON THIS SHEET ARE PREFIXED BY WC UNLESS OTHERWISE NOTED.
4. 1/4" X .028" STAINLESS STEEL TUBING - A269 - TP304

CAD FILE NAME: GE 148F437 S9 R40

REVISION 30 OF THIS DRAWING WAS REDRAWN FROM BR-M725, REV. 7.

REVISION 38 OF THIS DWG. WAS TRANSLATED TO AUTOCAD FROM CADAM FILE: V3E,232,21,0100,009-,360P

THIS IS A COMPUTER GENERATED DRAWING DO NOT REVISE IT MANUALLY

AmerGen

LIQUID RADWASTE COLLECTION AND PROCESSING SYSTEM

FLOW DIAGRAM

DRAWN	DATE
N.CARLSON	11-8-2000
CHECKED	DATE
D.ABBRUSCATO	12-28-2000
DESIGN MANAGER	DATE
CHECKED	DATE
N/A	
ENGINEERING MANAGER	DATE
N/A	

OYSTER CREEK

DWG. NO.	SH.	REV.
GE 148F437	9 OF 18	40

SCALE : NONE

NO.	DWG. NO.	TITLE
REFERENCES		

WA. NO.

DWG. NO. GE 148F437 SH. 9 OF 18

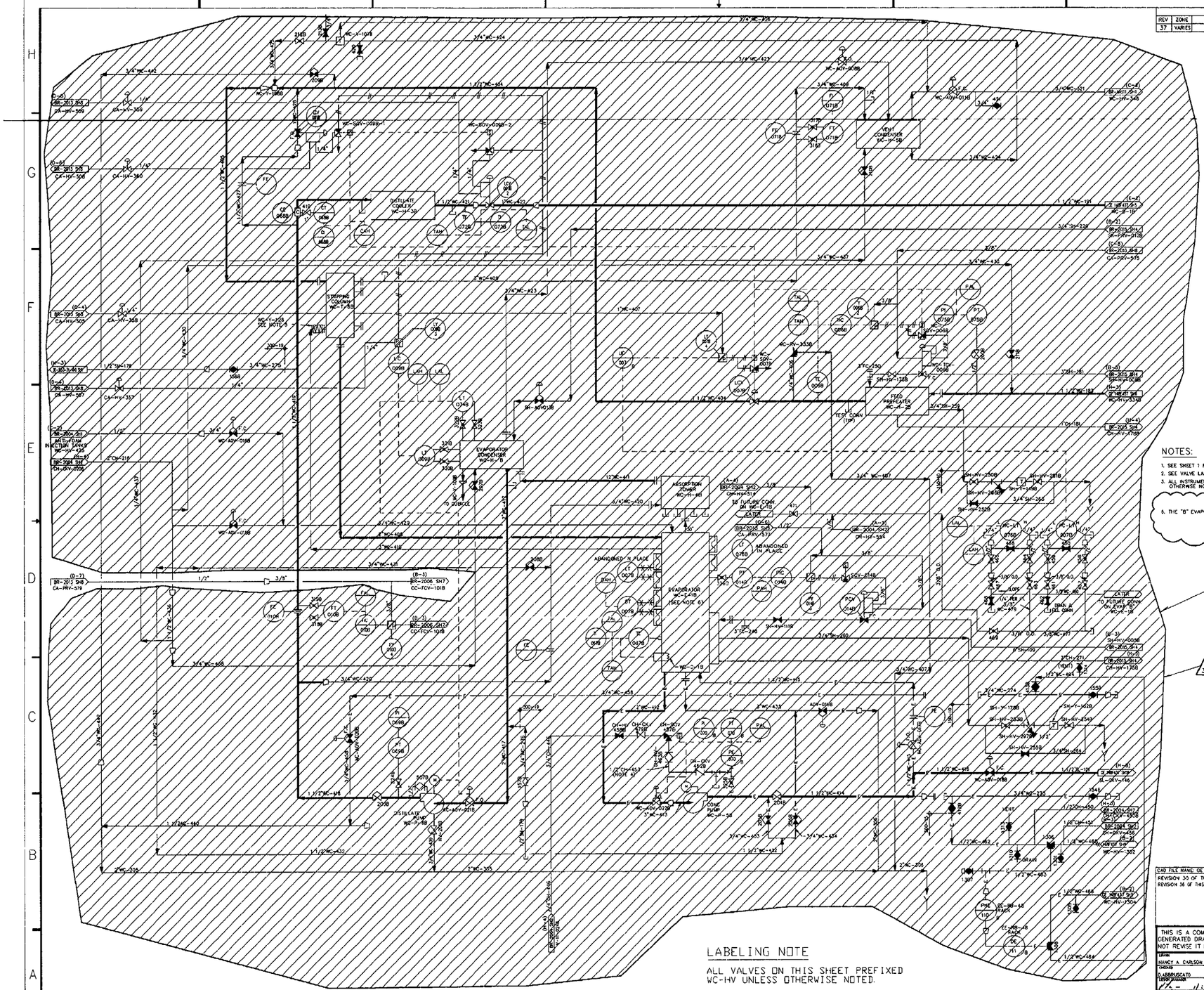

REVISIONS		
REV	ZONE	DESCRIPTION
37	VARIES	ECD C312244

NOTES:

1. SEE SHEET 1 FOR ADDITIONAL NOTES AND REFERENCES.
2. SEE VALVE LABELING NOTE.
3. ALL INSTRUMENT NUMBERS ON THIS SHEET ARE PREFIXED WC UNLESS OTHERWISE NOTED.
5. THE "B" EVAPORATOR IS REMOVED FROM SERVICE.

LABELING NOTE

ALL VALVES ON THIS SHEET PREFIXED WC-HV UNLESS OTHERWISE NOTED.

CAD FILE NAME: GE 148F437 S10 R37

REVISION 30 OF THIS DRAWING WAS REDRAWN FROM BR-W726, REV 4

REVISION 36 OF THIS DRAWING WAS TRANSLATED TO AUTOCAD FROM CADAM FILE: V3E,232,21,0100,010-,360P

THIS IS A COMPUTER GENERATED DRAWING DO NOT REVISE IT MANUALLY

DRAWN: NANCY A. CARLSON 11-21-00

CHECKED: D. ABBRUSCATO 12-28-00

DESIGN MANAGER: 1/1/01

ENGINEER: N/A

ENGINEERING MANAGER: N/A

AmerGen

LIQUID RADWASTE COLLECTION & PROCESSING SYSTEM

FLOW DIAGRAM

OYSTER CREEK

DWG. NO. GE 148F437 | SH. 10 OF 18 | REV. 37

SCALE: NONE

PIMS # N/A

NO.	DWG. NO.	TITLE
REFERENCES		

DWG NO. GE 148F437 SH. 10 OF 18

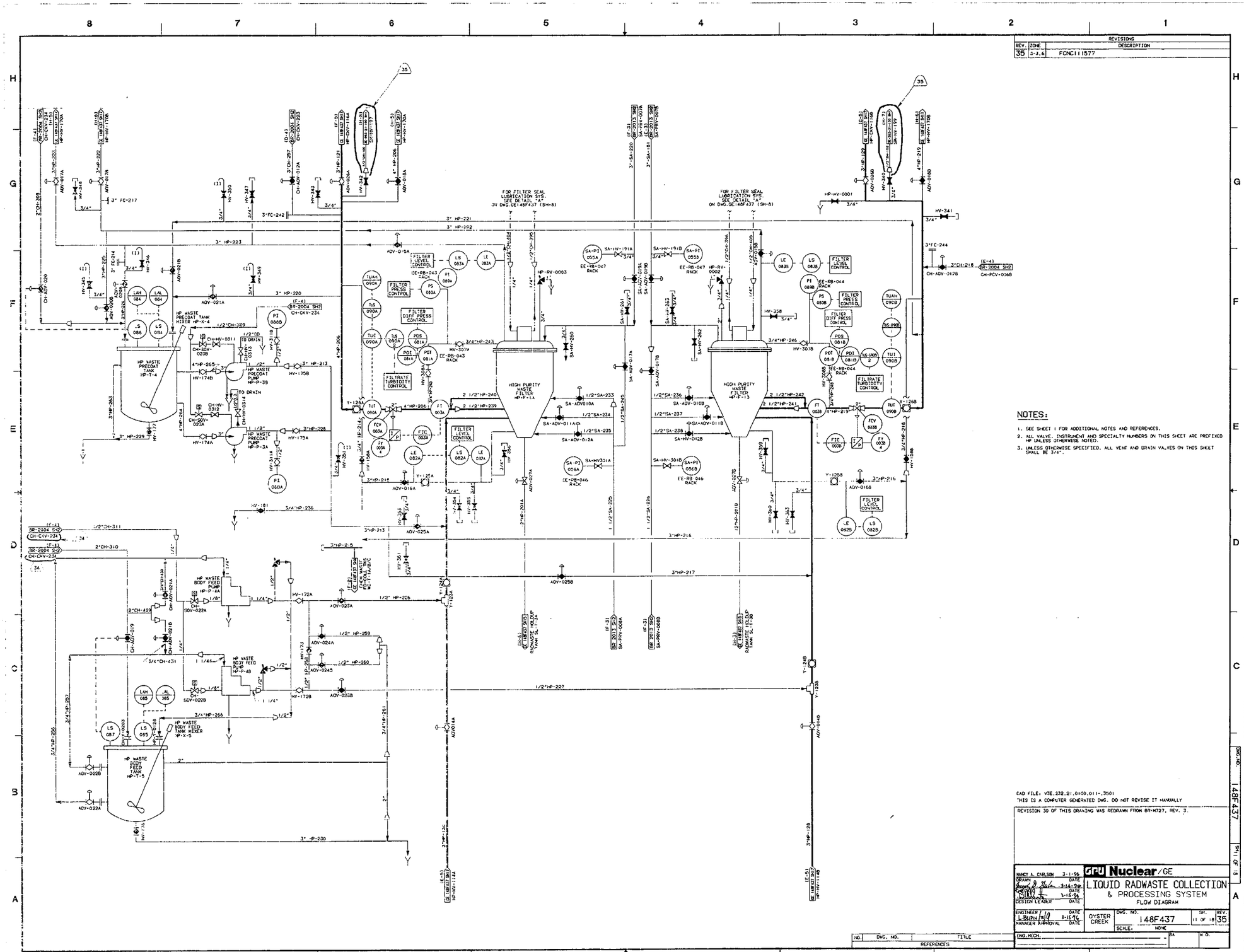

REV.	ZONE	REVISIONS DESCRIPTION
35	3-3,6	FCNC111577

NOTES:

1. SEE SHEET 1 FOR ADDITIONAL NOTES AND REFERENCES.
2. ALL VALVE, INSTRUMENT AND SPECIALTY NUMBERS ON THIS SHEET ARE PREFIXED HP UNLESS OTHERWISE NOTED.
3. UNLESS OTHERWISE SPECIFIED, ALL VENT AND DRAIN VALVES ON THIS SHEET SHALL BE 3/4".

CAD FILE: V3E.232.21.0100.011-.3501
THIS IS A COMPUTER GENERATED DWG. DO NOT REVISE IT MANUALLY

REVISION 30 OF THIS DRAWING WAS REDRAWN FROM BR-H727, REV. 3.

NANCY A. CARLSON	3-1-96	GPU Nuclear/GE
DRAWN	DATE	LIQUID RADWASTE COLLECTION & PROCESSING SYSTEM FLOW DIAGRAM
CHECKED	DATE	
DESIGN LEADER	DATE	
ENGINEER L. BURN	3-15-96	OYSTER CREEK — DWG. NO. 148F437 — SH. 11 OF 18 — REV. 35
MANAGER APPROVAL	DATE	SCALE: NONE
ENG. MECH.		BA — W.O.

NO.	DWG. NO.	TITLE
REFERENCES		

DWG. NO. 148F437 — SH. 11 OF 18

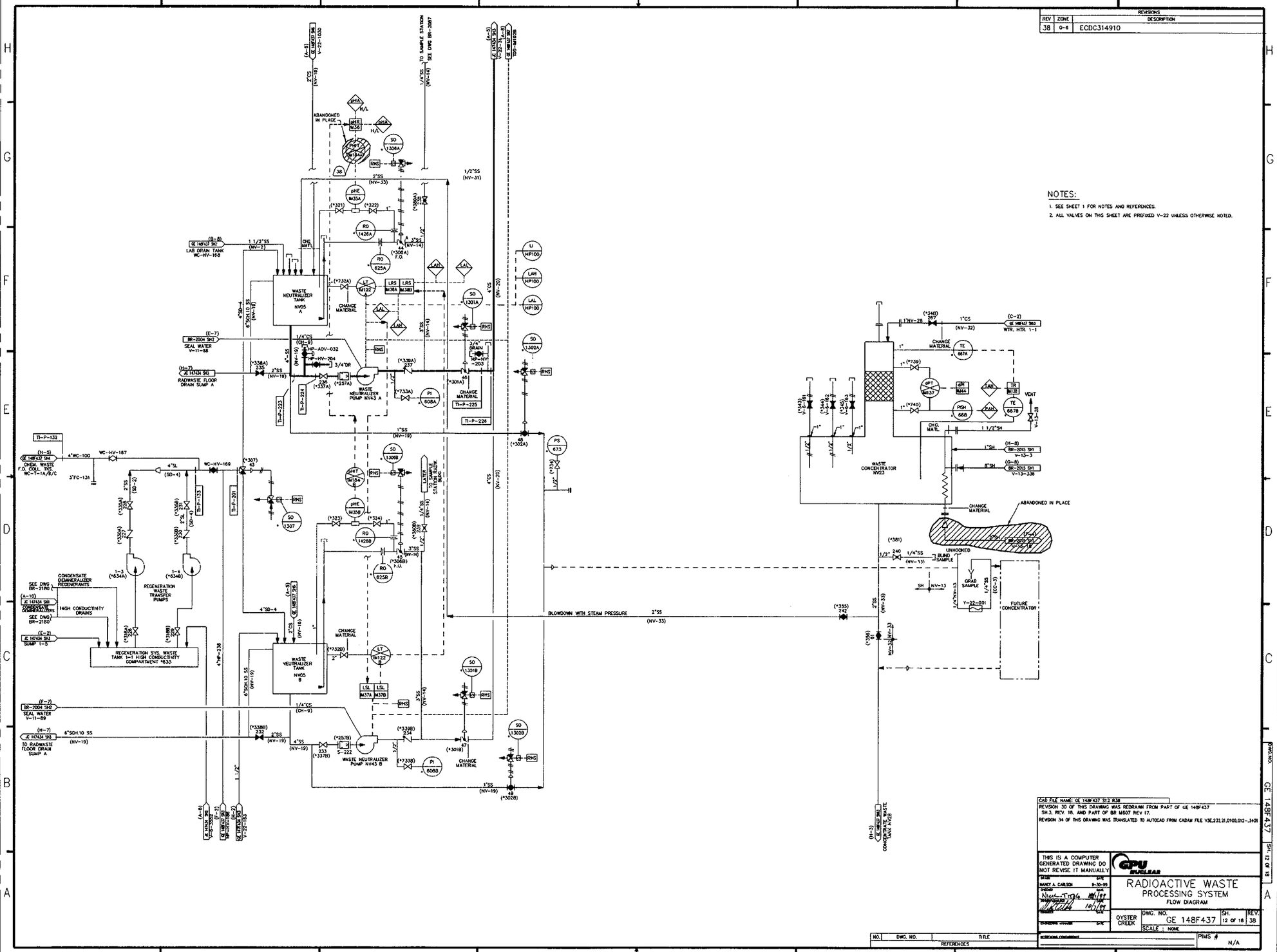

REV	ZONE	DESCRIPTION
38	0-6	ECDC314910

NOTES:

1. SEE SHEET 1 FOR NOTES AND REFERENCES.
2. ALL VALVES ON THIS SHEET ARE PREFIXED V-22 UNLESS OTHERWISE NOTED.

CAD FILE NAME: GE 148F437 S12 R38

REVISION 30 OF THIS DRAWING WAS REDRAWN FROM PART OF GE 148F437 SH.3, REV. 18, AND PART OF BR M607 REV 17.

REVISION 34 OF THIS DRAWING WAS TRANSLATED TO AUTOCAD FROM CADAM FILE V3E.231.21.0100.012-.3401

THIS IS A COMPUTER GENERATED DRAWING DO NOT REVISE IT MANUALLY

GPU NUCLEAR

RADIOACTIVE WASTE PROCESSING SYSTEM FLOW DIAGRAM

OYSTER CREEK

DWG. NO. GE 148F437 SH. 12 OF 18 REV. 38

SCALE : NONE

PIMS # N/A

NO.	DWG. NO.	TITLE
REFERENCES		

DWG. NO. GE 148F437 SH. 12 OF 18

REVISIONS		
REV	ZONE	DESCRIPTION
40	H-5	ECD C307472

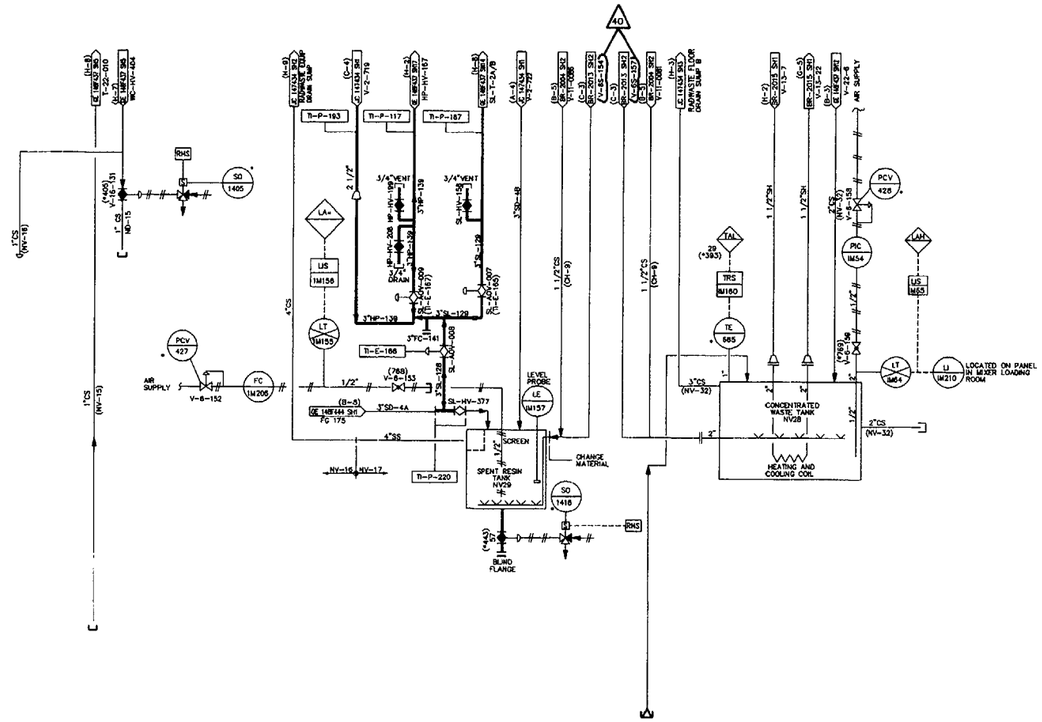

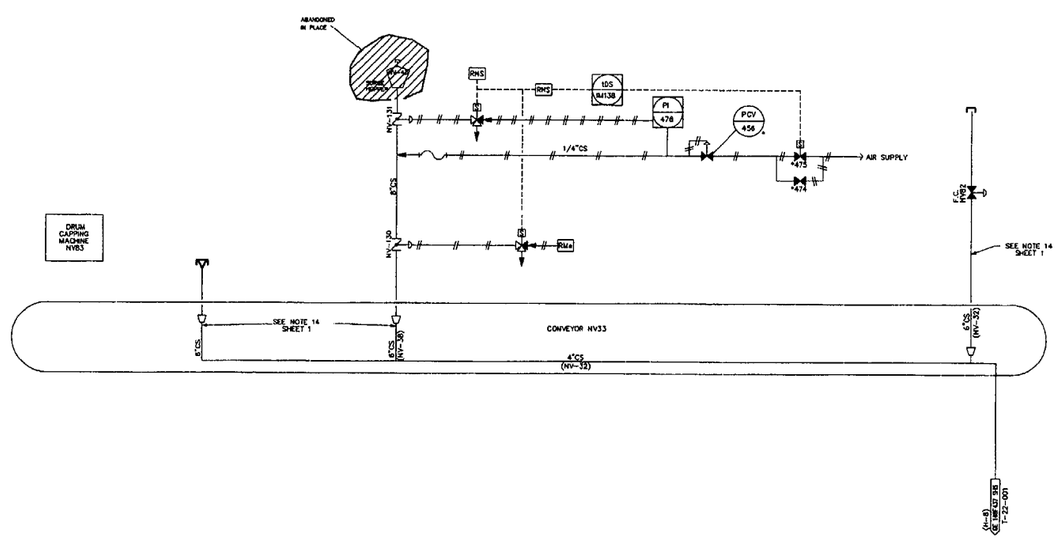

NOTES:

1. SEE SHEET 1 FOR NOTES AND REFERENCES
2. ALL VALVES ON THIS SHEET ARE PREFIXED V-22 UNLESS OTHERWISE NOTED.

CAD FILE NAME : GE 148F437 SH3 R40

REVISION 30 OF THIS DRAWING WAS REDRAWN FROM PART OF GE 148F437 SH3, REV.18 AND PART OF BR-M607, REV. 17.
REVISION 38 OF THIS DWG. WAS TRANSLATED TO AUTOCAD FROM CADAM FILE:V3E,233,21,0100,013=,38001

THIS IS A COMPUTER GENERATED DRAWING DO NOT REVISE IT MANUALLY

DRAWN	NANCY A. CARLSON	08/24/00
CHECKED	D. ABBRUSCATO	08/24/00
APPROVED		

AmerGen

RADIOACTIVE WASTE PROCESSING SYSTEM
FLOW DIAGRAM

OYSTER CREEK

DWG. NO.	SH.	REV.
GE 148F437	13 OF 18	40

SCALE : NONE

PIMS # N/A

NO.	DWG. NO.	TITLE
REFERENCES		

DWG.NO. GE 148F437 SH-13 OF 18

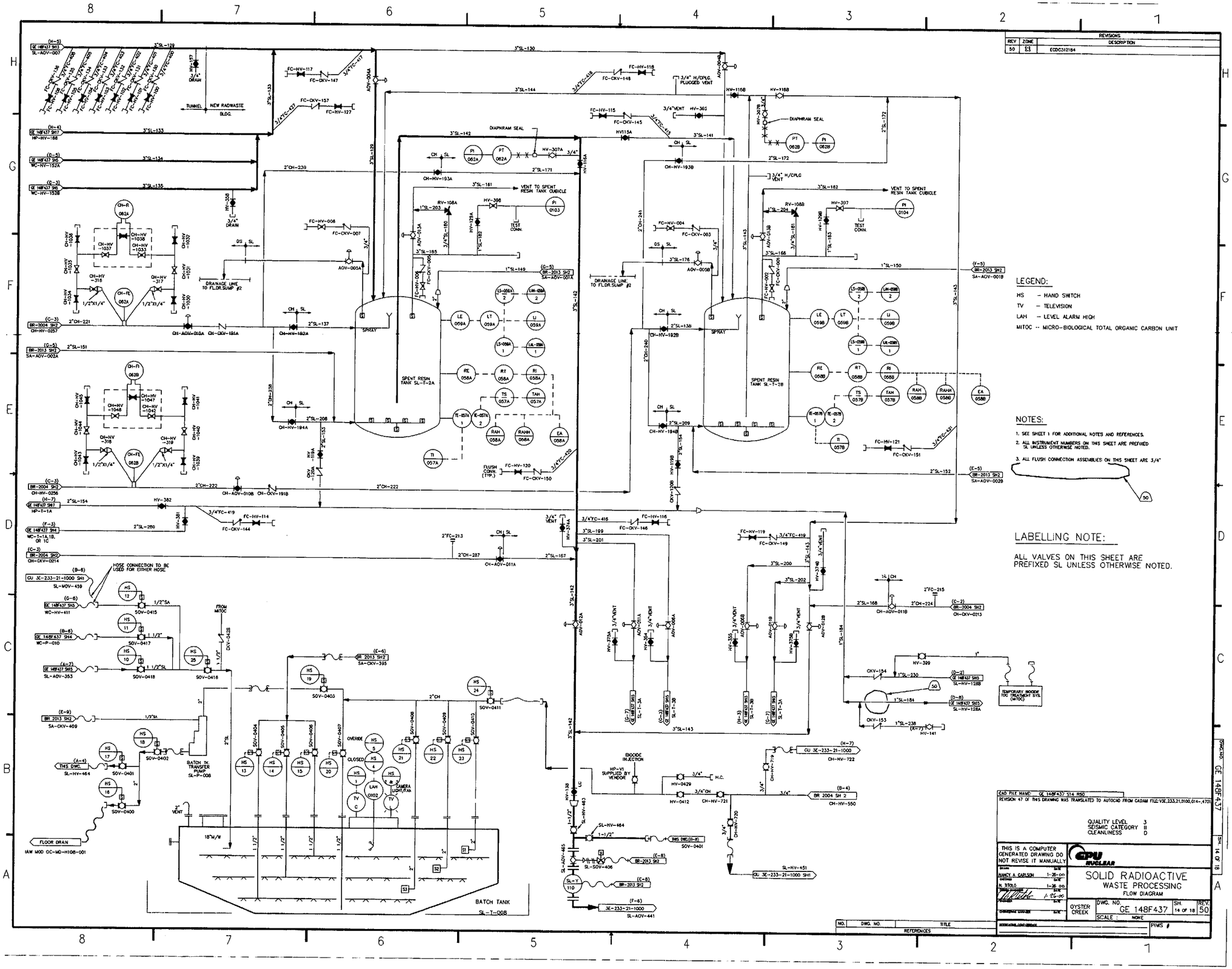

REVISIONS		
REV	ZONE	DESCRIPTION
50	E3	ECDC312184

LEGEND:

HS – HAND SWITCH
TV – TELEVISION
LAH – LEVEL ALARM HIGH
MITOC – MICRO-BIOLOGICAL TOTAL ORGANIC CARBON UNIT

NOTES:

1. SEE SHEET 1 FOR ADDITIONAL NOTES AND REFERENCES.
2. ALL INSTRUMENT NUMBERS ON THIS SHEET ARE PREFIXED SL UNLESS OTHERWISE NOTED.
3. ALL FLUSH CONNECTION ASSEMBLIES ON THIS SHEET ARE 3/4"

LABELLING NOTE:

ALL VALVES ON THIS SHEET ARE PREFIXED SL UNLESS OTHERWISE NOTED.

CAD FILE NAME: GE 148F437 S14 R50
REVISION 47 OF THIS DRAWING WAS TRANSLATED TO AUTOCAD FROM CADAM FILE: V3E,233,21,0100,014-,4701

QUALITY LEVEL 3
SEISMIC CATEGORY II
CLEANLINESS D

THIS IS A COMPUTER GENERATED DRAWING DO NOT REVISE IT MANUALLY

GPU NUCLEAR

SOLID RADIOACTIVE WASTE PROCESSING
FLOW DIAGRAM

OYSTER CREEK | DWG. NO. GE 148F437 | SH. 14 OF 18 | REV. 50
SCALE : NONE
PIMS #

NO.	DWG. NO.	TITLE
REFERENCES		

DWG. NO. GE 148F437 SH. 14 OF 18

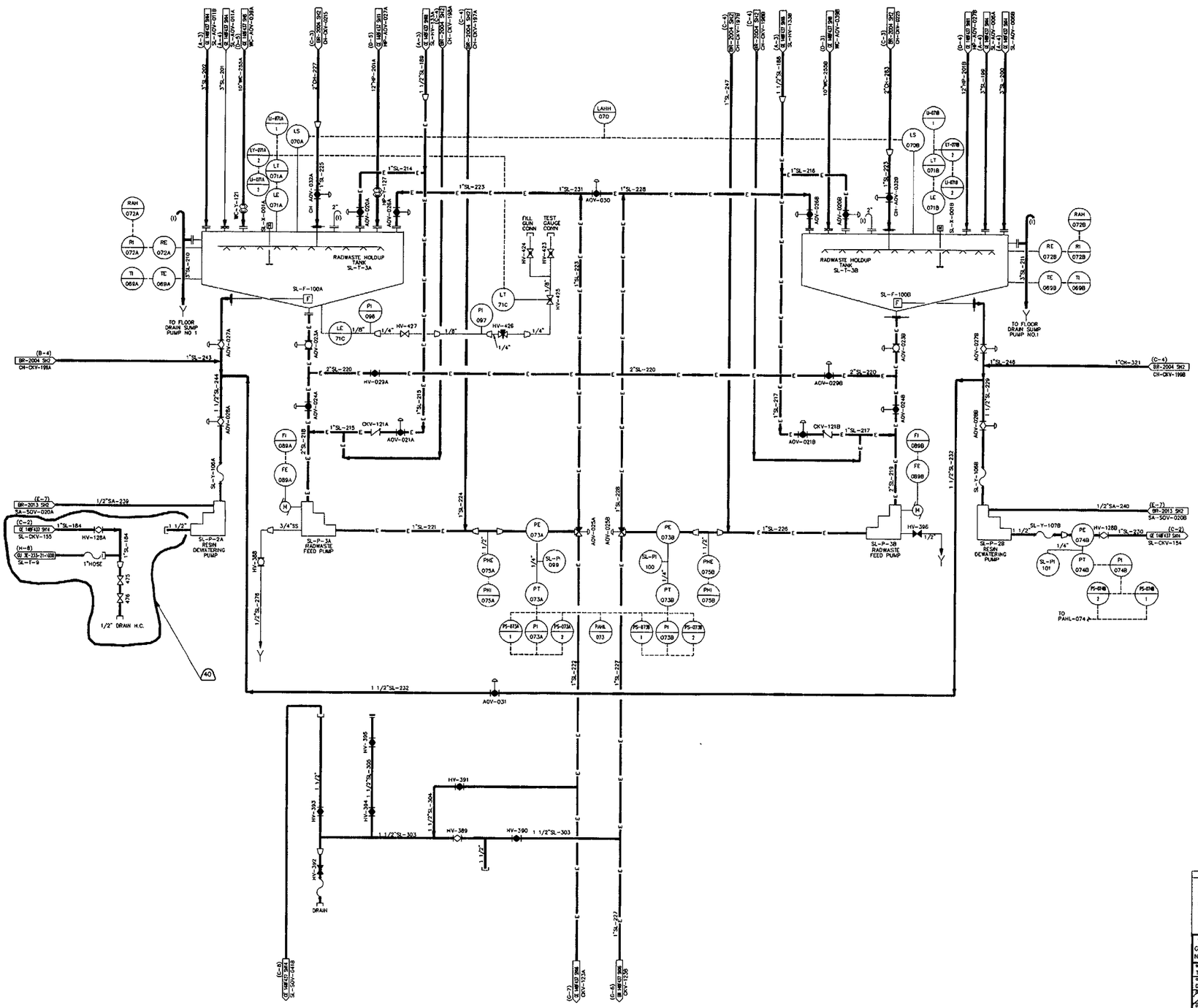

REV	ZONE	REVISIONS DESCRIPTION
40	CD.7.6	ECD C307680

NOTES:

1. SEE SHEET 1 FOR ADDITIONAL NOTES AND REFERENCES.
2. ALL VALVES AND INSTRUMENT NUMBERS ON THIS SHEET ARE PREFIXED SL UNLESS OTHERWISE NOTED
3. ALL FLUSH CONNECTIONS ASSEMBLIES ON THIS SHEET 3/4".

CAD FILE: GE 148F437 S15 R40

REVISION 39 OF THIS DRAWING WAS TRANSLATED TO AUTOCAD FROM CAD FILE: V3E.233.21.0100.015-.3901

REVISION 30 OF THIS DRAWING WAS REDRAWN FROM PART OF BR-M722, REV. 4

QUALITY LEVEL 3
SEISMIC CATEGORY II
CLEANLINESS D

THIS IS A COMPUTER GENERATED DRAWING DO NOT REVISE IT MANUALLY

GPU NUCLEAR

DRAWN T.W.USZKO,JR. DATE 5-18-99
CHECKED D.ABBRUSCATO DATE 5-18-99
DESIGN MANAGER 5-18-99
CHECKED DATE
SUBMITTED MANAGER DATE

SOLID RADIOACTIVE WASTE PROCESSING
FLOW DIAGRAM

OYSTER CREEK

DWG. NO. GE 148F437 SH. 15 OF 18 REV. 40
SCALE : NONE
PIMS # N/A

NO.	DWG. NO.	TITLE
REFERENCES		

DWG NO. GE 148F437 SH. 15 OF 18

REVISIONS		
REV.	ZONE	DESCRIPTION
33	M.L.F.	ADMINISTRATIVE CHANGE PER CMT 187051

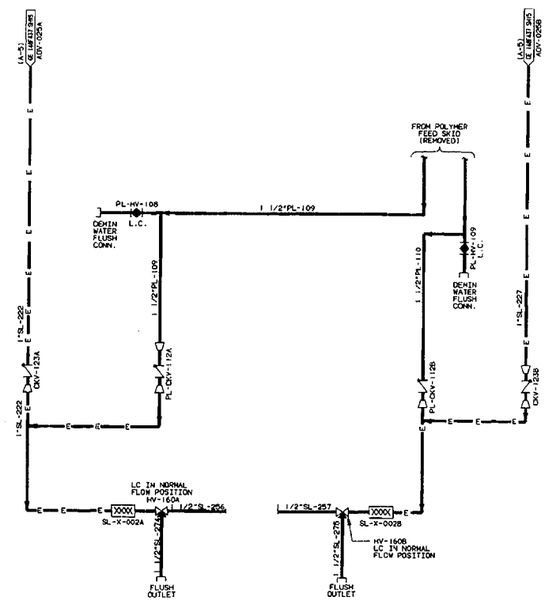

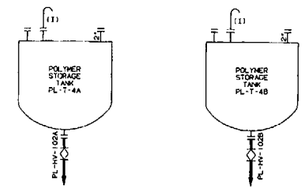

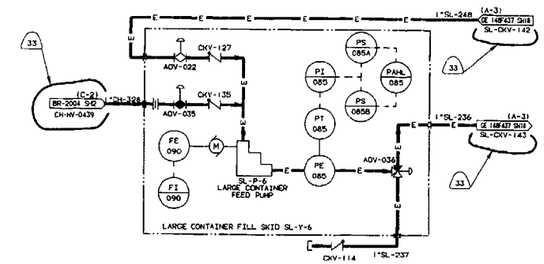

NOTES:

1. SEE SHEET 1 FOR ADDITIONAL NOTES AND REFERENCE DRAWINGS.
2. ALL VALVES AND INSTRUMENT NUMBERS ON THIS SHEET ARE PREFIXED SL UNLESS OTHERWISE NOTED.

33

CAD FILE: V3E.233.21.0100.016-.3301
THIS IS A COMPUTER GENERATED DWG. DO NOT REVISE IT MANUALLY

REVISION 30 OF THIS DRAWING WAS REDRAWN FROM PART OF BR-M722 REV.3

MARK EVERLY 01/15/96 DRAWN DATE	GPU Nuclear/GE	
DESIGN DATE	OBSOLETE SOLID RADIOACTIVE WASTE PROCESSING FLOW DIAGRAM	
DESIGN LEADER DATE		
ENGINEER DATE	OYSTER CREEK	DWG. NO. 148F437 SH. 16 OF 18 REV. 33
MANAGER APPROVAL DATE		SCALE: NONE

NO.	DWG. NO.	TITLE
REFERENCES		

ENG.MECH.	BY	W.O.

DWG. NO. 148F437 SH. 16 OF 18

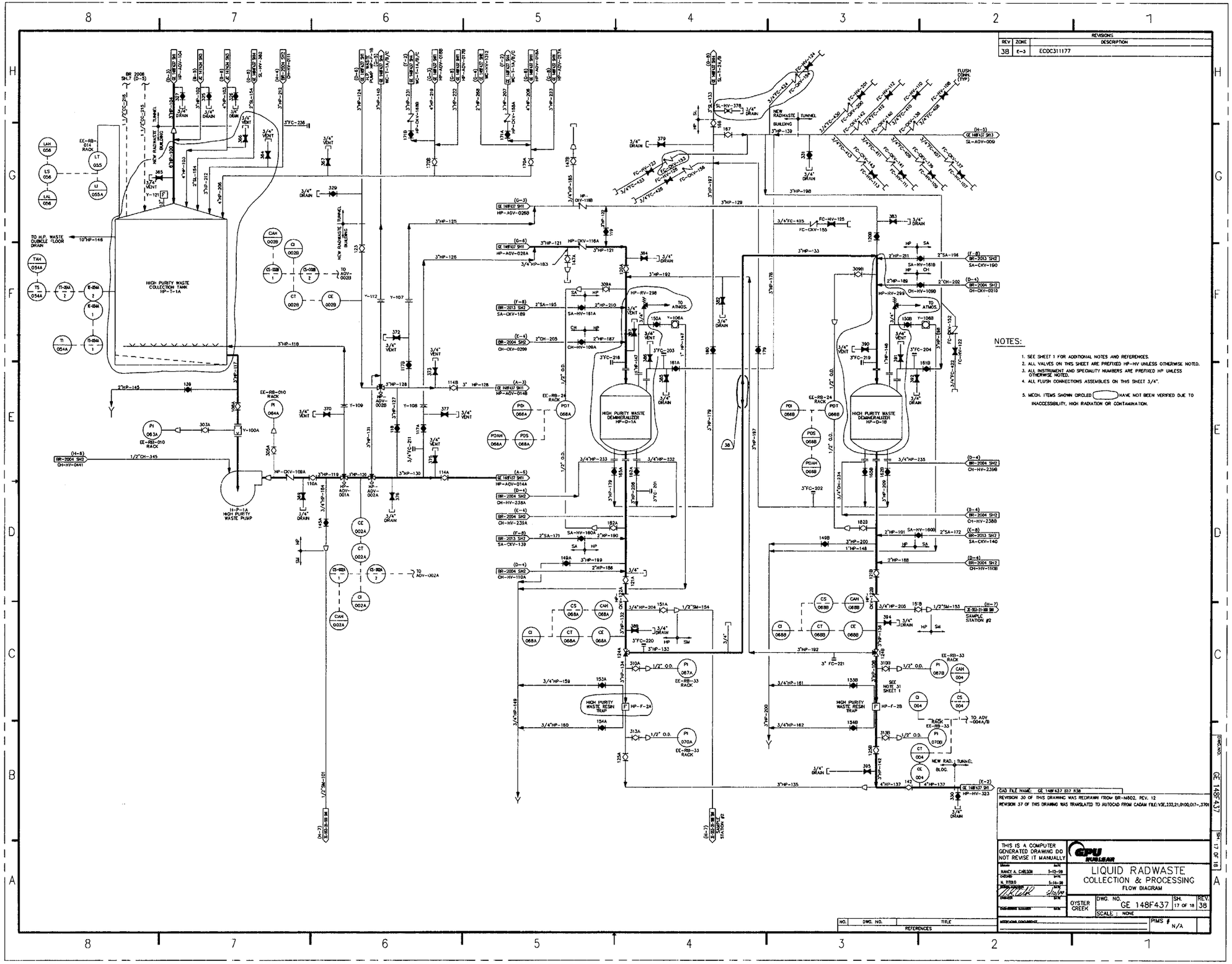

REVISIONS		
REV	ZONE	DESCRIPTION
38	E-3	ECDC311177

NOTES:

1. SEE SHEET 1 FOR ADDITIONAL NOTES AND REFERENCES.
2. ALL VALVES ON THIS SHEET ARE PREFIXED HP-HV UNLESS OTHERWISE NOTED.
3. ALL INSTRUMENT AND SPECIALTY NUMBERS ARE PREFIXED HP UNLESS OTHERWISE NOTED.
4. ALL FLUSH CONNECTIONS ASSEMBLIES ON THIS SHEET 3/4".
5. MECH. ITEMS SHOWN CIRCLED ( ) HAVE NOT BEEN VERIFIED DUE TO INACCESSIBILITY, HIGH RADIATION OR CONTAMINATION.

CAD FILE NAME: GE 148F437 S17 R38

REVISION 30 OF THIS DRAWING WAS REDRAWN FROM BR-N602, REV. 12

REVISION 37 OF THIS DRAWING WAS TRANSLATED TO AUTOCAD FROM CADAM FILE: V3E,232,21,0100,017-,3701

THIS IS A COMPUTER GENERATED DRAWING DO NOT REVISE IT MANUALLY

GPU NUCLEAR

LIQUID RADWASTE
COLLECTION & PROCESSING
FLOW DIAGRAM

OYSTER CREEK

DWG. NO. GE 148F437 | SH. 17 OF 18 | REV. 38

SCALE : NONE

PIMS # N/A

DWG.NO. GE 148F437 SH. 17 OF 18

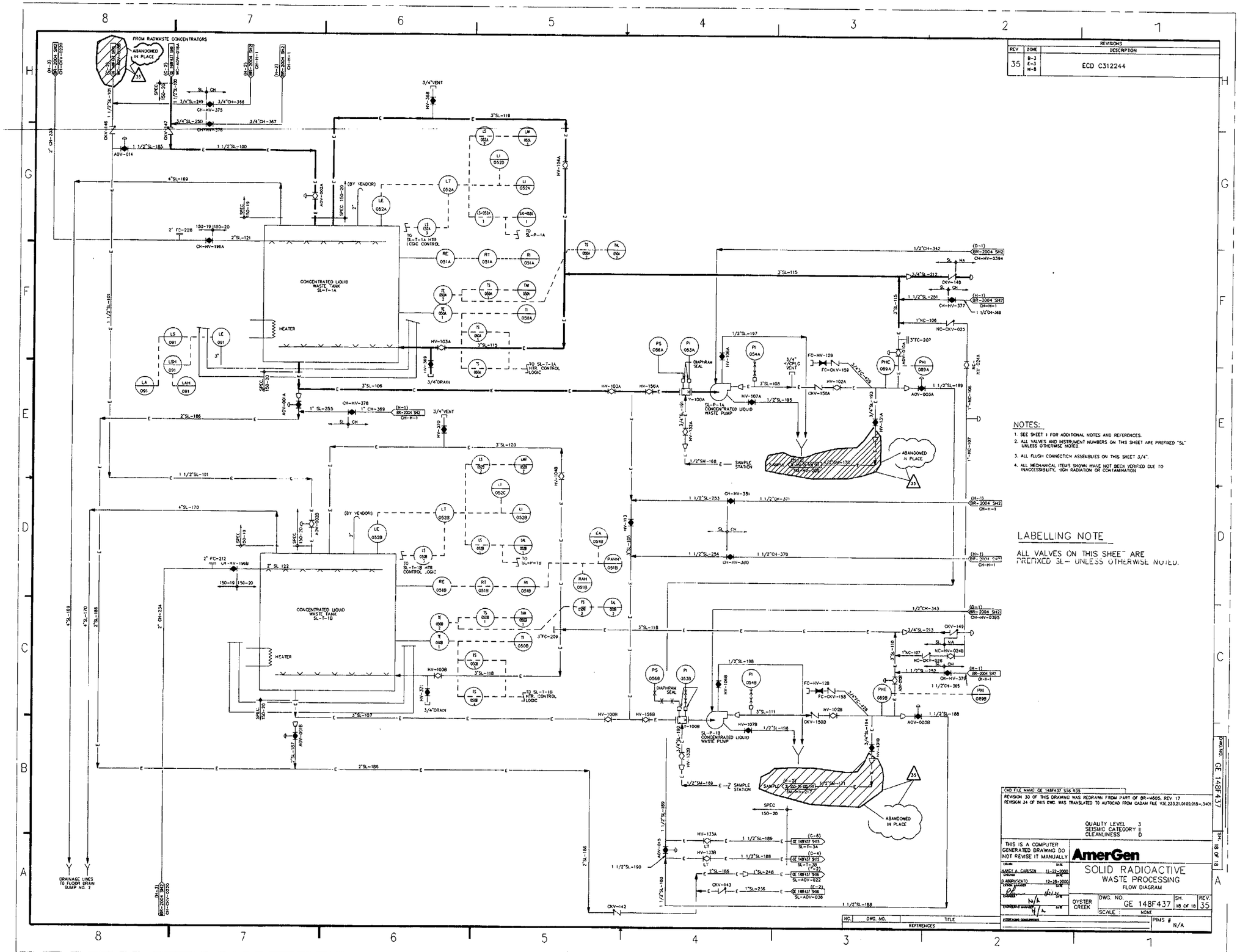
FROM RADWASTE CONCENTRATORS
ABANDONED IN PLACE
CONCENTRATED LIQUID WASTE TANK SL-T-1A
HEATER
SL-P-1A CONCENTRATED LIQUID WASTE PUMP
DIAPHRAM SEAL
SAMPLE STATION
CONCENTRATED LIQUID WASTE TANK SL-T-1B
SL-P-1B CONCENTRATED LIQUID WASTE PUMP
DRAINAGE LINES TO FLOOR DRAIN SUMP NO. 2
NOTES:
1. SEE SHEET 1 FOR ADDITIONAL NOTES AND REFERENCES.
2. ALL VALVES AND INSTRUMENT NUMBERS ON THIS SHEET ARE PREFIXED "SL" UNLESS OTHERWISE NOTED.
3. ALL FLUSH CONNECTION ASSEMBLIES ON THIS SHEET 3/4".
4. ALL MECHANICAL ITEMS SHOWN HAVE NOT BEEN VERIFIED DUE TO INACCESSIBILITY, HIGH RADIATION OR CONTAMINATION
LABELLING NOTE
ALL VALVES ON THIS SHEET ARE PREFIXED SL- UNLESS OTHERWISE NOTED.
REVISIONS
REV ZONE DESCRIPTION
35 B-3 C-3 H-8 ECO C312244
QUALITY LEVEL 3
SEISMIC CATEGORY II
CLEANLINESS D
THIS IS A COMPUTER GENERATED DRAWING DO NOT REVISE IT MANUALLY
AmerGen
SOLID RADIOACTIVE WASTE PROCESSING
FLOW DIAGRAM
OYSTER CREEK
DWG. NO. GE 148F437
SH. 18 OF 18
REV. 35
SCALE : NONE
PIMS # N/A
REFERENCES
GE 148F437

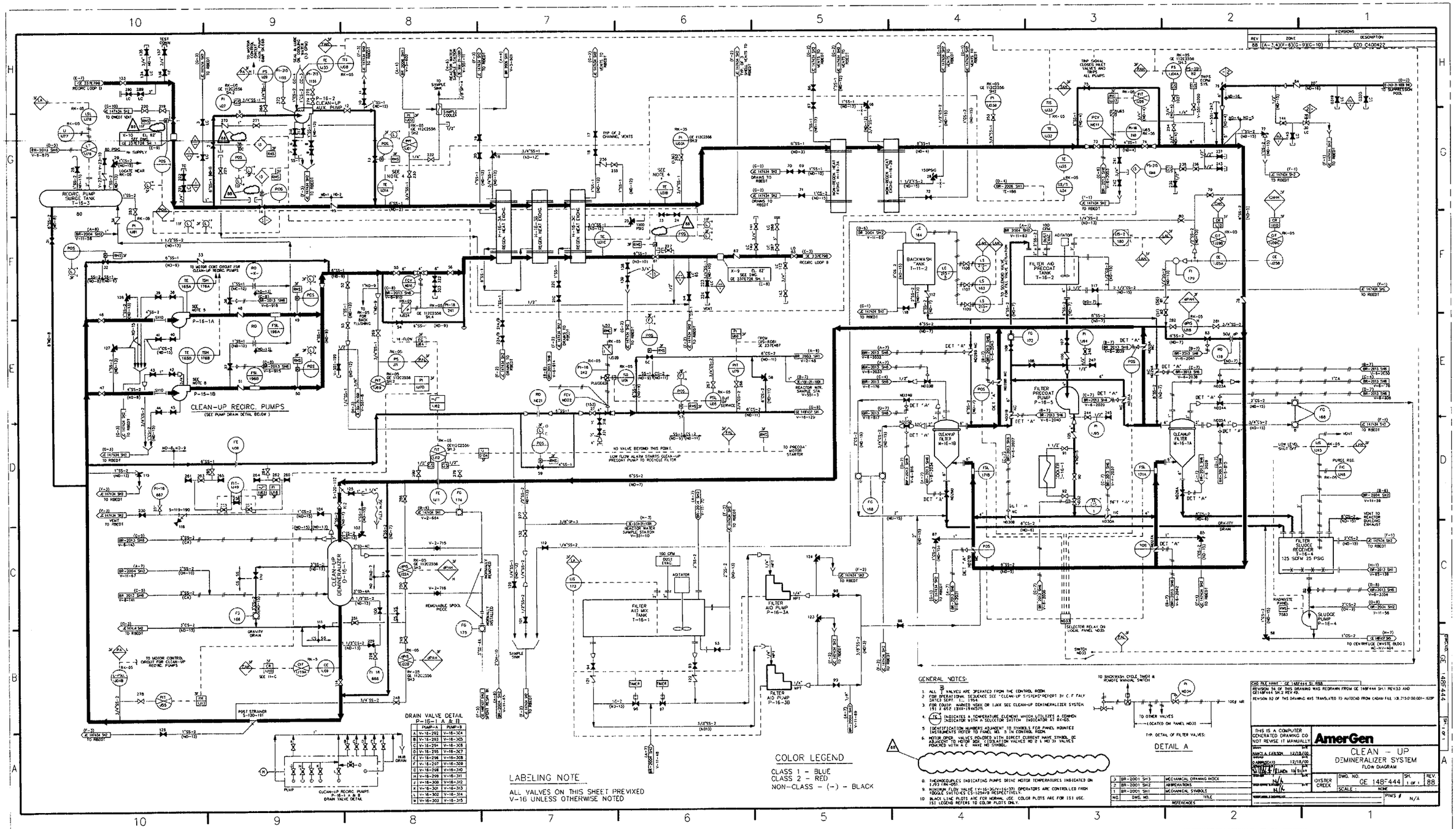
CLEAN-UP RECIRC. PUMPS
(SEE PUMP DRAIN DETAIL BELOW)
P-16-1A
P-16-1B
RECIRC. PUMP SURGE TANK T-15-3
CLEAN-UP DEMINERALIZER D-16-1
FILTER AID MIX TANK T-16-1
FILTER AID PUMP P-16-3A
FILTER AID PUMP P-16-3B
BACKWASH TANK T-11-2
FILTER AID PRECOAT TANK T-16-2
FILTER PRECOAT PUMP P-16-5
CLEANUP FILTER M-16-1B
CLEANUP FILTER M-16-1A
FILTER SLUDGE RECEIVER T-16-4
125 SCFM 25 PSIG
SLUDGE PUMP P-16-4
TO CENTRIFUGE (WASTE HOLDG.)
AC-W-404
RECIRC. LOOP B
TO RHRSW
TO RBCCW
TO RBEDT
TO OWEST VENT
VENT TO REACTOR BUILDING EXHAUST
GRAVITY DRAIN
PURGE REG.
LOW LEVEL SHUT OFF
TO MOTOR CONTROL CIRCUIT FOR CLEAN-UP RECIRC. PUMPS
POST STRAINER S-120-191
REMOVABLE SPOOL
NORMALLY INSTALLED
SAMPLE SINK
100 CPM DUST EVAC.
AGITATOR
TO SOLENOID VALVE ON BACKWASH CONTROLLER
SELECTOR RELAY ON LOCAL PANEL NO33
SWITCH NO33
RADWASTE PANEL 7583
TO BACKWASH CYCLE TIMER & REMOTE MANUAL SWITCH
100# AIR
TO OTHER VALVES
(LOCATED ON PANEL NO33)
TYP. DETAIL OF FILTER VALVES:
DETAIL A
DRAIN VALVE DETAIL
P-16-1 A & B
PUMP
CLEAN-UP RECIRC. PUMPS P-16-1 A & B DRAIN VALVE DETAIL
LABELING NOTE
ALL VALVES ON THIS SHEET PREFIXED V-16 UNLESS OTHERWISE NOTED
COLOR LEGEND
CLASS 1 - BLUE
CLASS 2 - RED
NON-CLASS - (-) - BLACK
GENERAL NOTES:
1. ALL 3/4" VALVES ARE OPERATED FROM THE CONTROL ROOM.
2. FOR OPERATIONAL SEQUENCE SEE "CLEAN-UP SYSTEMS" REPORT BY C. F. FALY DATED SEPT. 1, 1966.
3. FOR COLOR MARKED WORK OR 1.XXX SEE CLEAN-UP DEMINERALIZER SYSTEM ISI 2 BOD 1B3X-1194357R.
4. (TE) INDICATES A TEMPERATURE ELEMENT WHICH UTILIZES A COMMON INDICATOR WITH A SELECTOR SWITCH. INDICATION AT RK-05.
5. IDENTIFICATION NUMBERS ADJACENT TO SYMBOLS FOR PANEL MOUNTED INSTRUMENTS REFER TO PANEL NO. 3 IN CONTROL ROOM.
6. MOTOR OPER. VALVES POWERED WITH DIRECT CURRENT HAVE SYMBOL DC ADJACENT TO MOTOR BOX. (ISOLATION VALVES NO 2 & NO 3) VALVES POWERED WITH A.C. HAVE NO SYMBOL.
8. THERMOCOUPLES INDICATING PUMPS DRIVE MOTOR TEMPERATURES INDICATED ON 1.293 RM-051.
9. MINIMUM FLOW VALVE (V-16-3G/V-16-3F) OPERATORS ARE CONTROLLED FROM TOGGLE SWITCHES CS-1294F/G RESPECTIVELY.
10. BLACK LINE PLOTS ARE FOR NORMAL USE. COLOR PLOTS ARE FOR ISI USE. ISI LEGEND REFERS TO COLOR PLOTS ONLY.
CAD FILE NAME - GE 148F444 SH. 01B3
REVISION 34 OF THIS DRAWING WAS REDRAWN FROM GE 148F444 SH.1 REV.33 AND GE148F444 SH.2 REV.49.
REVISION 82 OF THIS DRAWING WAS TRANSLATED TO AUTOCAD FROM CADAM FILE V3B.2150.00.001-1120P
THIS IS A COMPUTER GENERATED DRAWING DO NOT REVISE IT MANUALLY
AmerGen
CLEAN - UP
DEMINERALIZER SYSTEM
FLOW DIAGRAM
OYSTER CREEK
DWG. NO. GE 148F444
SH. 1 OF 1
REV. 88
SCALE: NONE
PIMS # N/A
REFERENCES
BR-2001 SH3 MECHANICAL DRAWING INDEX
BR-2001 SH2 ABBREVIATIONS
BR-2001 SH1 MECHANICAL SYMBOLS
NO. DWG. NO. TITLE
REVISIONS
REV ZONE DESCRIPTION
88 (A-1,4)(F-6)(G-9)(G-10) ECO C400422

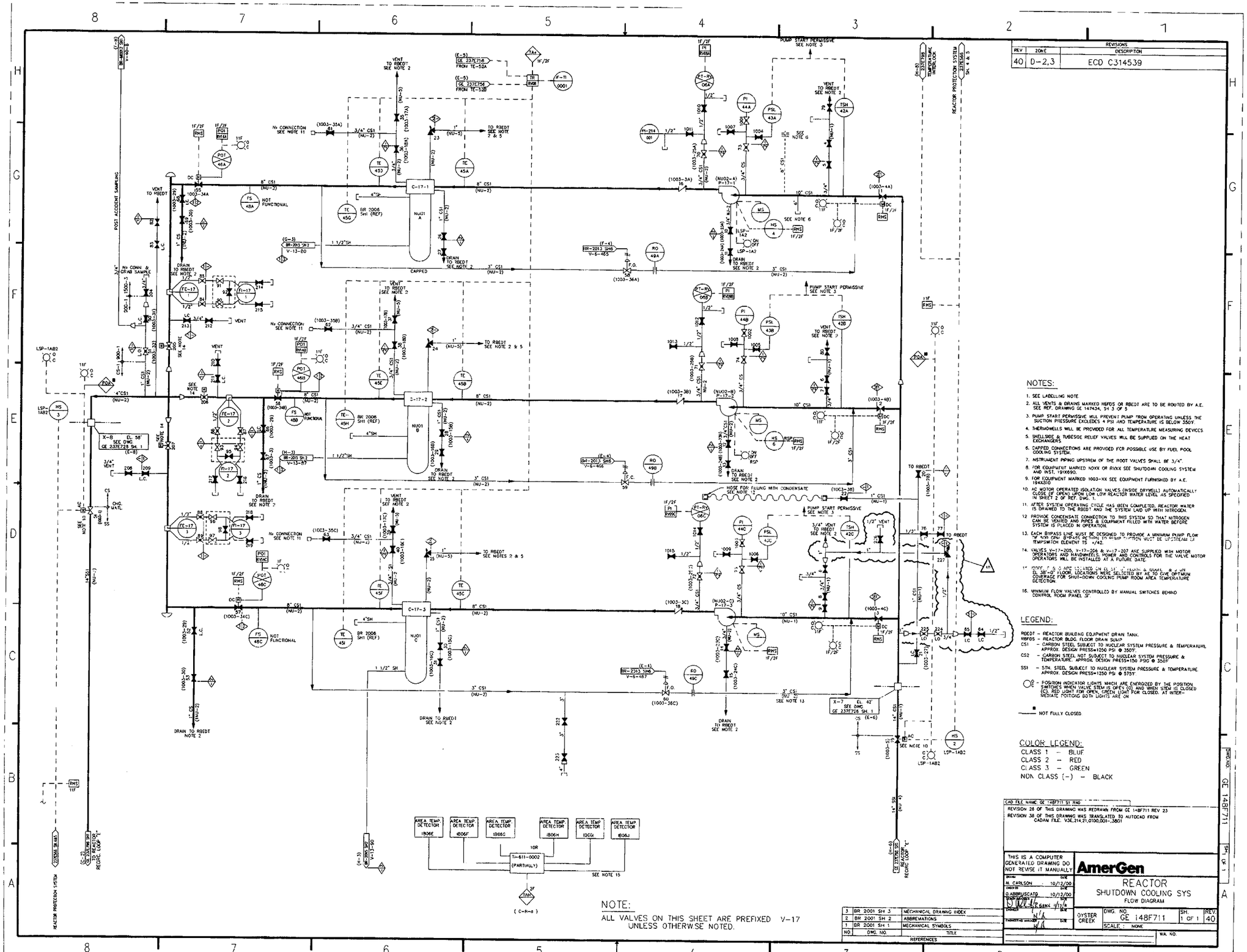

REVISIONS		
REV	ZONE	DESCRIPTION
40	D-2,3	ECD C314539

NOTES:

1. SEE LABELLING NOTE
2. ALL VENTS & DRAINS MARKED HBFDS OR RBEDT ARE TO BE ROUTED BY A.E. SEE REF. DRAWING GE 147434, SH 3 OF 5
3. PUMP START PERMISSIVE WILL PREVENT PUMP FROM OPERATING UNLESS THE SUCTION PRESSURE EXCEEDS 4 PSI AND TEMPERATURE IS BELOW 350°F.
4. THERMOWELLS WILL BE PROVIDED FOR ALL TEMPERATURE MEASURING DEVICES
5. SHELLSIDE & TUBESIDE RELIEF VALVES WILL BE SUPPLIED ON THE HEAT EXCHANGERS.
6. CAPPED CONNECTIONS ARE PROVIDED FOR POSSIBLE USE BY FUEL POOL COOLING SYSTEM.
7. INSTRUMENT PIPING UPSTREM OF THE ROOT VALVES SHALL BE 3/4".
8. FOR EQUIPMENT MARKED NXXX OR RVXX SEE SHUTDOWN COOLING SYSTEM AND INST. 1914690.
9. FOR EQUIPMENT MARKED 1003-XX SEE EQUIPMENT FURNISHED BY A.E. 1944310
10. AC MOTOR OPERATED ISOLATION VALVES (INSIDE DRYWELL) AUTOMATICALLY CLOSE (IF OPEN) UPON LOW LOW REACTOR WATER LEVEL AS SPECIFIED IN SHEET 2 OF REF. DWG. 1.
11. AFTER SYSTEM OPERATING CYCLE HAS BEEN COMPLETED, REACTOR WATER IS DRAINED TO THE RBEDT AND THE SYSTEM LAID UP WITH NITROGEN.
12. PROVIDE CONDENSATE CONNECTION TO THIS SYSTEM SO THAT NITROGEN CAN BE VENTED AND PIPES & EQUIPMENT FILLED WITH WATER BEFORE SYSTEM IS PLACED IN OPERATION.
13. EACH BYPASS LINE MUST BE DESIGNED TO PROVIDE A MINIMUM PUMP FLOW OF NON CPU BYPASS PUMPS 1/4 MINIMUM FLOW MUST BE UPSTREAM OF TEMPSWITCH ELEMENT TS 1/42.
14. VALVES V-17-205, V-17-206 & V-17-207 ARE SUPPLIED WITH MOTOR OPERATORS AND HANDWHEELS. POWER AND CONTROLS FOR THE VALVE MOTOR OPERATORS WILL BE INSTALLED AT A FUTURE DATE.
15. [illegible] EL 38'-0" FLOOR. LOCATIONS WERE SELECTED BY AE TO GIVE OPTIMUM COVERAGE FOR SHUT-DOWN COOLING PUMP ROOM AREA TEMPERATURE DETECTOR.
16. MINIMUM FLOW VALVES CONTROLLED BY MANUAL SWITCHES BEHIND CONTROL ROOM PANEL 3F.

LEGEND:

RBEDT - REACTOR BUILDING EQUIPMENT DRAIN TANK.
RBFDS - REACTOR BLDG. FLOOR DRAIN SUMP.
CS1 - CARBON STEEL SUBJECT TO NUCLEAR SYSTEM PRESSURE & TEMPERATURE APPROX. DESIGN PRESS=1250 PSI @ 350°F.
CS2 - CARBON STEEL NOT SUBJECT TO NUCLEAR SYSTEM PRESSURE & TEMPERATURE. APPROX. DESIGN PRESS=150 PSIG @ 350F.
SS1 - STN. STEEL SUBJECT TO NUCLEAR SYSTEM PRESSURE & TEMPERATURE APPROX. DESIGN PRESS=1250 PSI @ 575F.
○ - POSITION INDICATOR LIGHTS WHICH ARE ENERGIZED BY THE POSITION SWITCHES WHEN VALVE STEM IS OPEN (O) AND WHEN STEM IS CLOSED (C). RED LIGHT FOR OPEN, GREEN LIGHT FOR CLOSED. AT INTERMEDIATE POITIONS BOTH LIGHTS ARE ON
■ - NOT FULLY CLOSED

COLOR LEGEND:

CLASS 1 - BLUE
CLASS 2 - RED
CLASS 3 - GREEN
NON CLASS (-) - BLACK

NOTE:

ALL VALVES ON THIS SHEET ARE PREFIXED V-17 UNLESS OTHERWISE NOTED.

NO.	DWG. NO.	TITLE
3	BR 2001 SH 3	MECHANICAL DRAWING INDEX
2	BR 2001 SH 2	ABBREVIATIONS
1	BR 2001 SH 1	MECHANICAL SYMBOLS

REFERENCES

CAD FILE NAME: GE 148F711 S1 R40
REVISION 26 OF THIS DRAWING WAS REDRAWN FROM GE 148F711 REV 23
REVISION 38 OF THIS DRAWING WAS TRANSLATED TO AUTOCAD FROM CADAM FILE: V3E.214.21.0100.001-.3601

THIS IS A COMPUTER GENERATED DRAWING DO NOT REVISE IT MANUALLY

		DATE
DRAWN	N. CARLSON	10/12/00
CHECKED	D.ABRAMUSCATO	10/12/00
PROJECT ENGINEER	STW 4/12 G.GANCK	4/12/96
ENGINEER	N/A	
PROJECT MANAGER	N/A	

AmerGen

REACTOR
SHUTDOWN COOLING SYS
FLOW DIAGRAM

OYSTER CREEK | DWG. NO. GE 148F711 | SH. 1 OF 1 | REV. 40 | SCALE: NONE | W.A. NO.

REVISIONS		
REV	ZONE	DESCRIPTION
36	ALL	ISI BOUNDARY INFO INCORPORATED

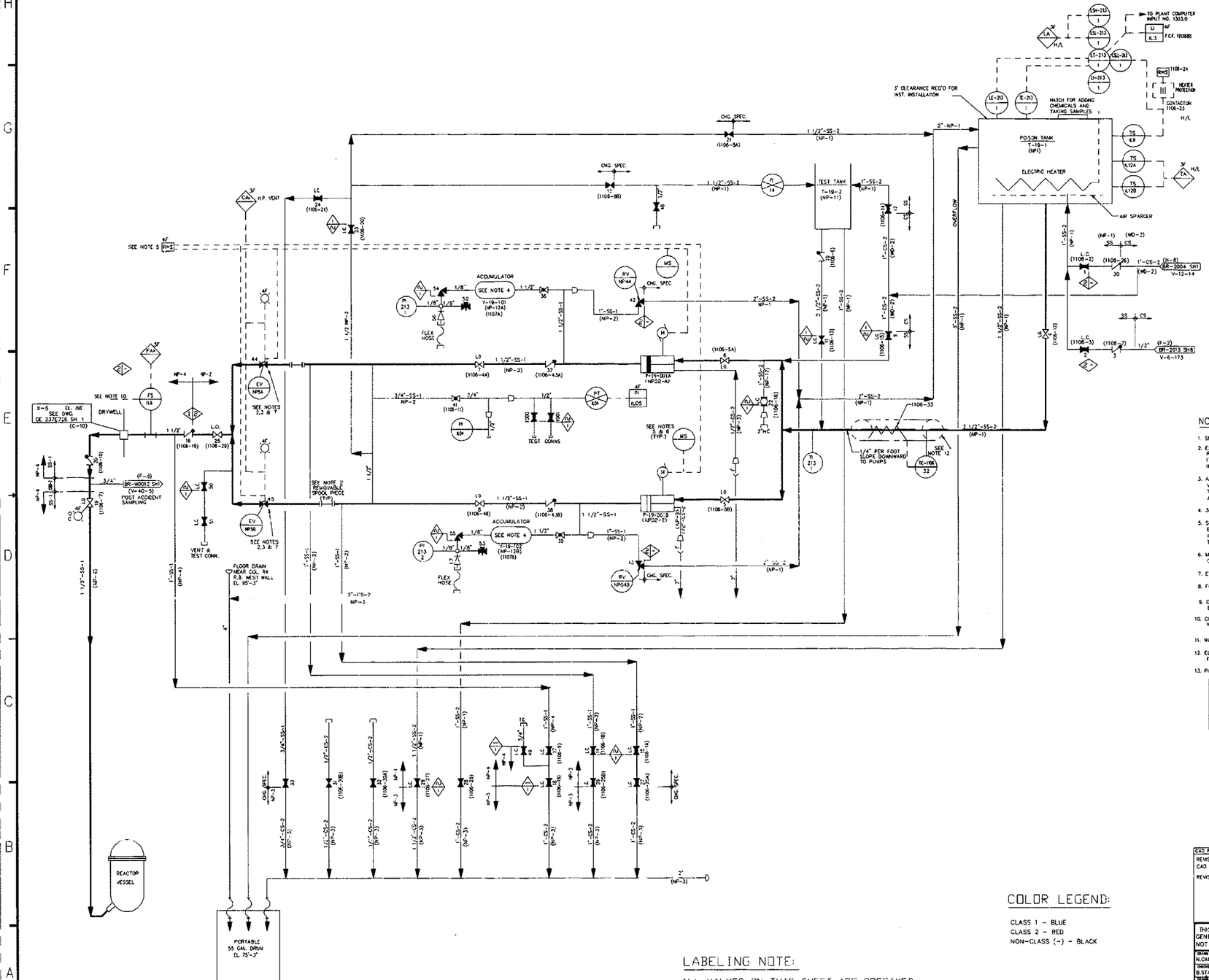

NOTES:

1. SEE VALVE LABELING NOTE.
2. EXPLOSIVE VALVES ARE DOUBLE SQUIB ACTUATED SHEAR PLUGS IN ORDER TO SERVICE THESE VALVES AFTER FIRING, IT IS NECESSARY TO REMOVE A SIX INCH SPOOL PIECE IMMEDIATELY UPSTREAM OF THE RESPECTIVE VALVE. (E7)
3. A LOW CURRENT ELECTRICAL MONITORING SYSTEM GIVES VISIBLE (PILOT LIGHT) INDICATION OF CIRCUIT CONTINUITY THROUGH BOTH FIRING SQUIBS IN EACH VALVE AND ASSURES FIRING READINESS.
4. 320 PSIG GAS PRECHARGE. (F6) (D6)
5. SYSTEM IS ENERGIZED (SHEAR PLUGS FIRE & ONE PUMP STARTS BY ACTUATION OF KEYLOCKED REMOTE MANUAL SELECTOR SWITCH IN THE CONTROL ROOM/LOCAL MOUNTED HAND SWITCHES ARE FOR TEST PURPOSES AND ENERGIZE THEIR RESPECTIVE PUMPS ONLY.(E5)(F8)
6. MOTOR STARTERS ARE INTERLOCKED TO PREVENT SIMULTANEOUS OPERATION OF BOTH PUMPS. (E5)
7. EV - EXPLOSIVE VALVE
8. FOR EQUIP. MARKED NPXX OR ILXX SEE POISON SYSTEM PL191X691.
9. EQUIP. & INSTRUMENTS 1106-XX ARE LISTED ON "EQUIP. FURNISHED BY A.E." PL 194X576.
10. CLEAN-UP SYSTEM SHOULD BE INTERLOCKED TO PREVENT OPERATION WHEN POISON SYSTEM IS ACTUATED.
11. NUMBERS IN PARENTHESIS ARE A.E. IDENTIFICATION NUMBERS.
12. ELECTRIC PIPE HEATER AND THERMAL INSULATION ON SUCTION LINE BETWEEN TANK & PUMP, INCLUDING BRANCHES TO FIRST STOP VALVE.
13. PIPING LEGEND-FOR GENERAL ARRANGEMENT ONLY (E4)

SS	PIPE MATERIAL-STAINLESS STEEL TYPE 304 OR 316	
CS	PIPE MATERIAL-CARBON STEEL	
1	PRESS./TEMP REQUIREMENTS-REACTOR SYSTEM DESIGN CONDITIONS 1250#/575F	
2	PRESS./TEMP REQUIREMENTS-PIPING NOT SUBJECT TO REACTOR SYS. CONDITIONS. APPROX DESIGN CONDITIONS	150PSIG 150F

COLOR LEGEND:

CLASS 1 - BLUE
CLASS 2 - RED
NON-CLASS (-) - BLACK

LABELING NOTE:

ALL VALVES ON THIS SHEET ARE PREFIXED BY V-19 UNLESS OTHERWISE NOTED

NO.	DWG. NO.	TITLE
3	BR-2001 SH3	MECHANICAL DRAWING INDEX
2	BR-2001 SH2	ABBREVIATIONS
1	BR-2001 SH1	MECHANICAL SYMBOLS

REFERENCES

CAD FILE NAME: GE 148F723 S1 R36

REVISION 33 OF THIS DRAWING WAS TRANSLATED TO AUTOCAD FROM CAD FILE: V3E.213.21.0100.001-.3301

REVISION 21 OF THIS DRAWING WAS REDRAWN FROM GE 148F723, REV. 18

THIS IS A COMPUTER GENERATED DRAWING DO NOT REVISE IT MANUALLY

AmerGen

DRAWN N.CARLSON DATE 10-4-2000
CHECKED B.STANKIEWICZ DATE 10-5-2000
DESIGN REVIEW DATE 11-7-00
ENGINEER DATE
ENGINEERING MANAGER DATE

LIQUID POISON SYSTEM
FLOW DIAGRAM

OYSTER CREEK | DWG. NO. GE 148F723 | SH. 1 OF 1 | REV. 36
SCALE: NONE
PIMS # N/A

DWG.NO. GE 148F723 SH. 1 OF 1

REV	ZONE	REVISIONS DESCRIPTION
41	A-4	ECO C314575

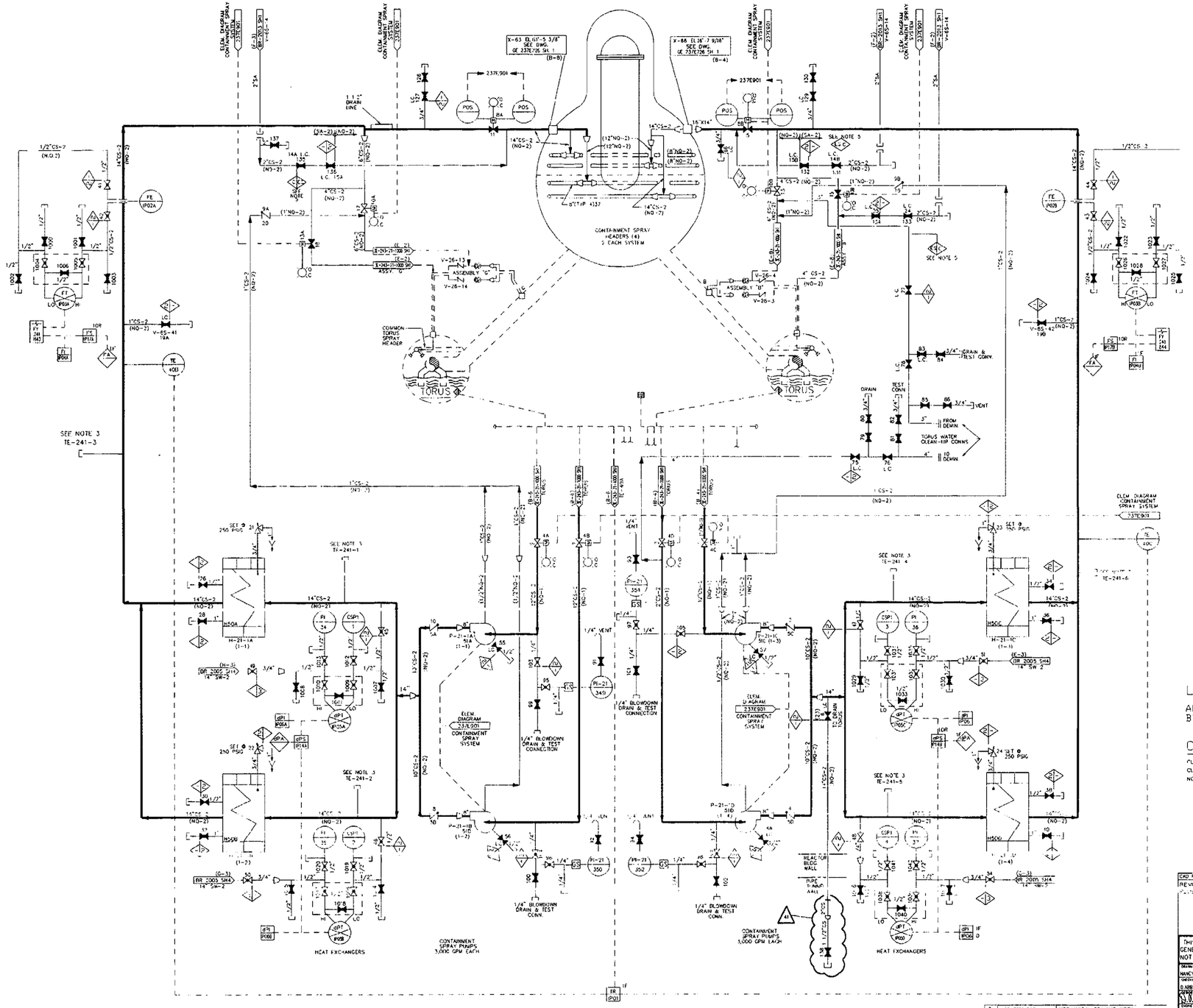

NOTES

1. SEE VALVE LABELING NOTE
2. INSTRUMENT AND COMPONENT SYMBOLS REFER TO DRAWING NO. BBP 2001
3. THERMOWELL IS NORMALLY EMPTY AND CAPPED. IT IS DESIGNED FOR TEMPERATURE INSTRUMENTS TO BE INSTALLED WHEN OBTAINING HX PERFORMANCE DATA.
4. BLACK LINE PLOTS FOR NORMAL USE. COLOR PLOTS FOR ISI USE. ISI LEGEND REFERS TO COLOR PLOTS ONLY.
5. DENOTES ENGINEERING STANDARD ES-001 CLASS.

LABELING NOTE:

ALL VALVES ON THIS SHEET ARE PREFIXED BY V-21 UNLESS OTHERWISE NOTED.

COLOR LEGEND:

CLASS 2 - RED
CLASS 3 - GREEN
NON-CLASS (-) - BLACK

CAD FILE NAME: GE 148F740 S1 R41

REVISION 21 OF THIS DRAWING WAS REDRAWN FROM GE 148F740, REV. 20. REVISION 19 WAS GENERATED TO INCLUDE ISI DIAGRAM FOR TECHNICAL SPECIFICATIONS.

NO.	DWG. NO.	TITLE
3	BR-2001 SH3	MECHANICAL DRAWING INDEX
2	BR-2001 SH2	ABBREVIATIONS
1	HR-2001 SH1	MECHANICAL SYMBOLS

REFERENCES

THIS IS A COMPUTER GENERATED DRAWING DO NOT REVISE IT MANUALLY

DRAWN: NANCY A. CARLSON 10/19/00
CHECKED: D. ABERCRCMBIE 10/19/00
DESIGN ENGINEER: D. W. TOWNES 11/4/00
DISCIPLINE: M. A.
DISCIPLINE MANAGER: M. A.

AmerGen

CONTAINMENT SPRAY SYSTEM FLOW DIAGRAM

OYSTER CREEK

DWG. NO. GE 148F740 | SH. 1 OF 1 | REV. 41

SCALE: NONE

PIMS # N/A

REVISIONS		
REV	ZONE	DESCRIPTION
28	ALL	ISI BOUNDARY INFO INCORPORATED

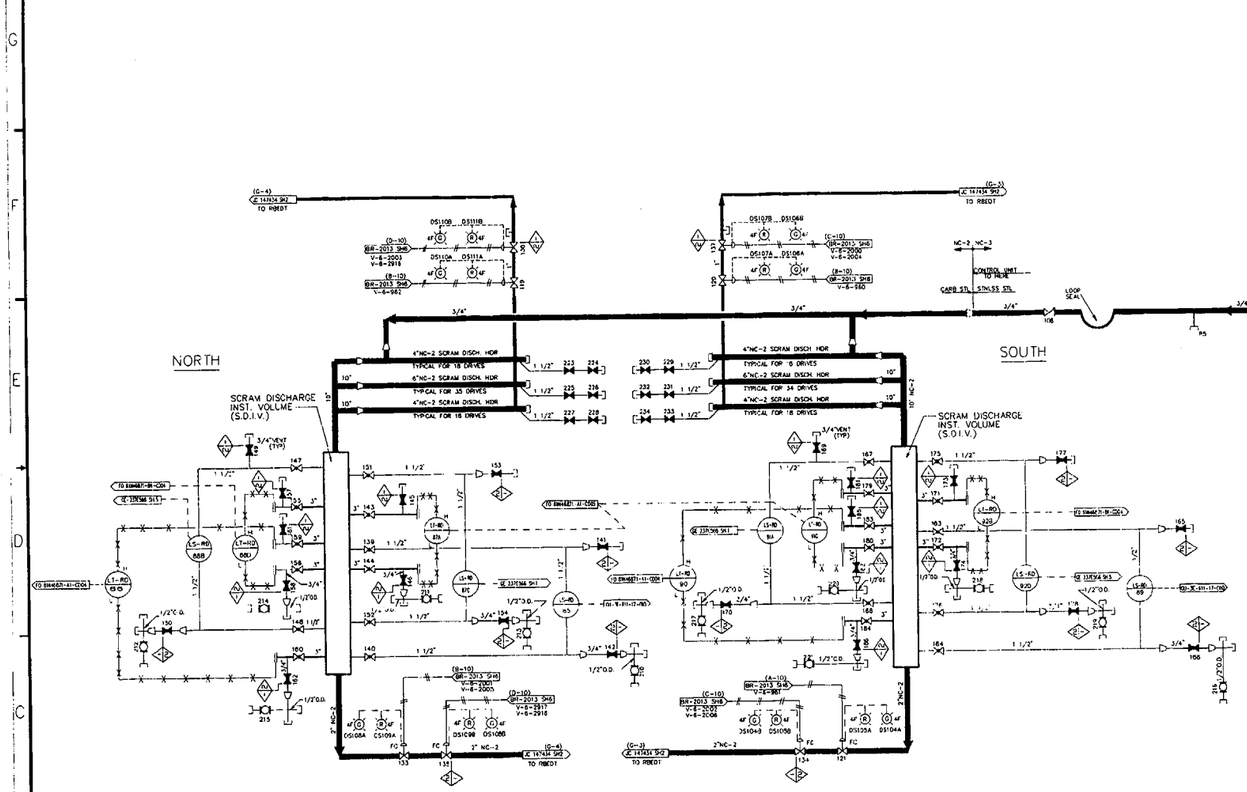

SCRAM DISCHARGE VOLUME SYSTEM

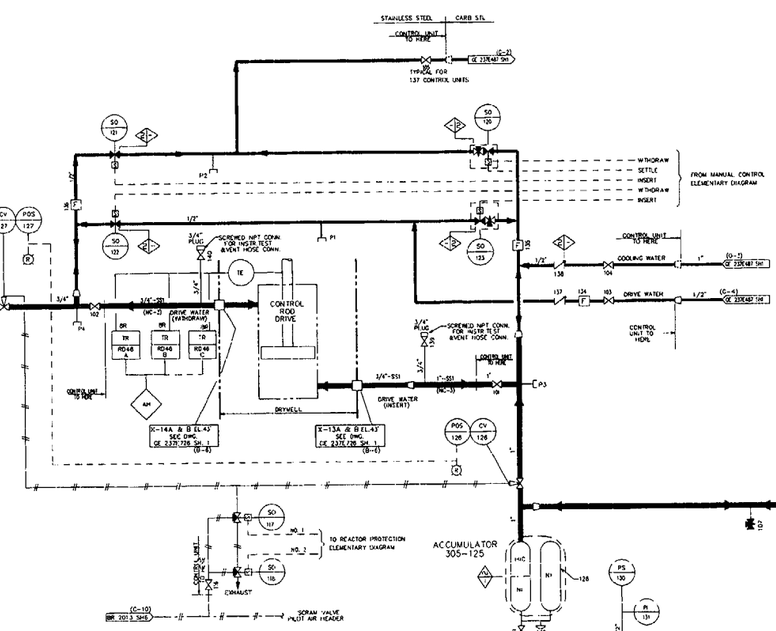

CONTROL ROD DRIVE HYDRAULIC SYSTEM
TYPICAL-137 CONTROL ROD DRIVES &
137 CONTROL UNIT / ACCUMULATORS

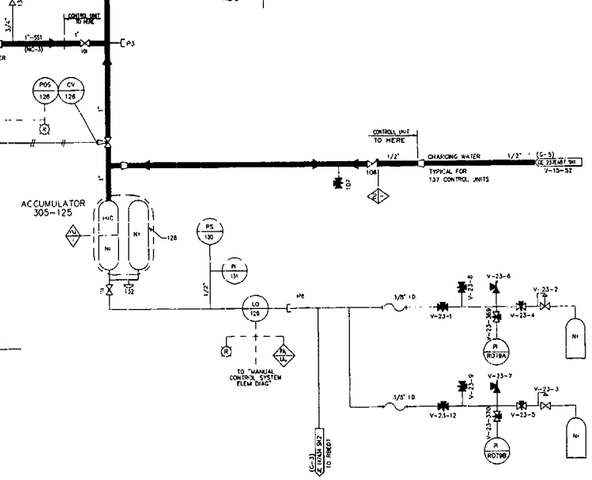

ACCUMULATOR NITROGEN CHARGING SYSTEM

ELECTRICAL CONNECTIONS

DESCRIPTION	IDENTITY	FUNCTION	SETTING
LEAK DETECTOR	129	ALARM, CONTROL ROOM	10 in. ± CONTACTS OPEN ON RISING LIQUID LEVEL
PRESSURE SWITCH	130	ALARM, CONTROL ROOM	970/943 PSIG CONTACTS OPEN ON DECREASING PRESSURE
SOLENOID VALVES	120 & 122	DIRECTION CONTROL/WITHDRAW	———
SOLENOID VALVES	121 & 123	DIRECTION CONTROL/INSERT	———
SCRAM VALVE PILOT SOLENOID	117 & 118	SCRAM	———
SCRAM VALVE POSITION SWITCH	126 & 127	POSITION INDICATOR/CONTROL ROOM	CONTACTS CLOSE WHEN VALVE IS OPEN
LEAK DETECTOR LIGHT	129	INDICATOR, LOCAL	———
PRESSURE SWITCH LIGHT	130	INDICATOR, LOCAL	———
TEMPERATURE MONITOR	RD46	RECORDER	———

LABELLING NOTES:

1. ALL VALVES AND INSTRUMENTS ON CONTROL ROD DRIVE HYDRALIC SYSTEM ARE PREFIXED BY "335" UNLESS OTHERWISE NOTED.
2. ALL VALVES AND INSTRUMENTS ON SCRAM DISCHARGE VOLUME SYSTEM ARE PREFIXED BY "15" UNLESS OTHERWISE NOTED.

GENERAL NOTES:

1. SOLENOID OPERATED VALVES ARE SHOWN IN DE-ENERGIZED POSITION.

COLOR LEGEND:

CLASS 2 - RED
NON-CLASS (-) - BLACK

NO	DWG. NO	TITLE
3	BR-2101 SH3	MECHANICAL DRAWING INDEX
2	BR-2101 SH2	ABBREVIATIONS
1	BR-2101 SH1	MECHANICAL SYMBOLS

REFERENCES

CAD FILE NAME: GE 137E871 S1 R28
REVISION 24 OF THIS DWG. WAS TRANSLATED TO AUTOCAD FROM CADAM FILE: V3C.223.31.0101.021-.240P
REVISION 10 OF THIS DRAWING WAS REDRAWN FROM GE 137E871, REV. 9 & PART OF GE 237E487 REV 34
REVISION 13 OF THIS DRAWING INCORPORATED PARTS OF GE 237E487 SH1 REV44 & GE 237E487 SH2 REV 41

THIS IS A COMPUTER GENERATED DRAWING DO NOT REVISE IT MANUALLY

DRAWN	NAME	DATE
	NANCY A CARLSON	9-28-2000
CHECKED		
ESTIMATED NET		10-05-2000
ESTIMATED GROSS		
DESIGN ENGINEER		
DESIGN ENGINEER		
DRAWING NO. T		
DRAWING MANAGER		
SCREENING ASSESSMENT		

AmerGen

SCRAM DISCHARGE VOLUME SYS
CONTROL ROD DRIVE HYDRAULIC SYS
AND NITROGEN CHARGING SYS
FLOW DIAGRAM

OYSTER CREEK | DWG. NO. GE 137E871 | SH. 1 of | REV. 28 | SCALE: NONE

PMS # N/A

REVISIONS		
REV.	ZONE	DESCRIPTION
25	VARIES	ECDC208562

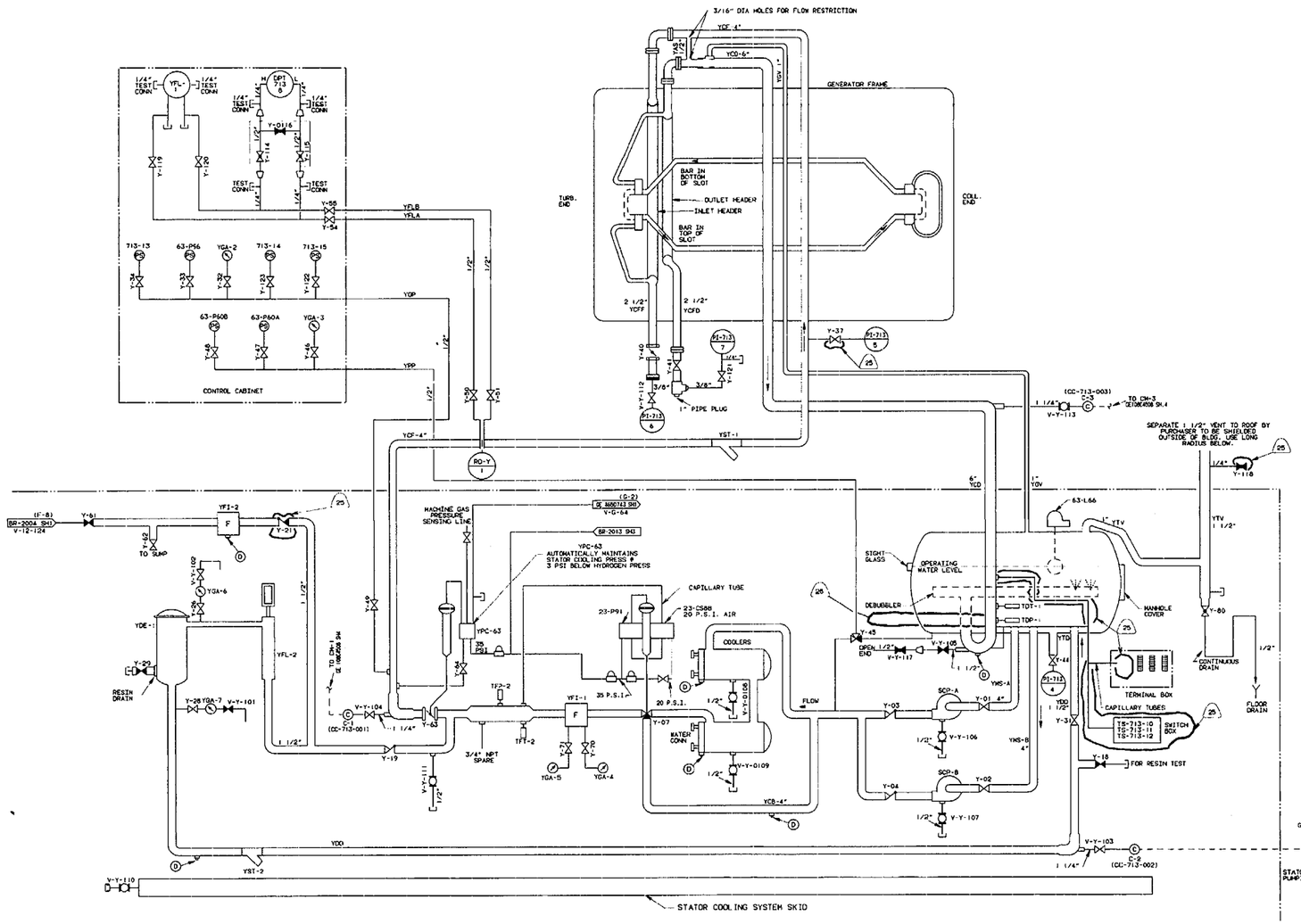

INSTRUMENT LEGEND

23-CS65....CONTROLLER FOR Y-07 WITH TEMPERATURE METER-(SENSES INLET WATER TEMP.) (10 SCFH MAX.)
23-P91....VALVE POSITIONER FOR Y-07. (10 SCFH MAX.)
63-L66....HIGH-LOW LEVEL SWITCH-ALARMS AT 4" ABOVE 4" BELOW OPERATING WATER LEVEL.
63-P60 A..PUMP PRESSURE SWITCH-STARTS RESERVE PUMP ON DECREASE OF 10 P.S.I.
63-P60 B..PUMP PRESSURE SWITCH-STARTS RESERVE PUMP ON DECREASE OF 20 P.S.I.
PS-713-13 PS-713-14 PS-713-15 PRESSURE SWITCH (INLET WATER) TURBINE RUNBACK SET AT A FLOW OF 223 GPM +11-0.
63-P96....PRESSURE SWITCH (INLET WATER) SET TO ALARM @ A FLOW OF 234 GPM +12-0
TS-713-10 TS-713-11 TS-713-12 THERMOSTAT (OUTLET WATER) TURBINE RUNBACK AT 69° C (INCREASING)
C-1.....GENERATOR INLET CONDUCTIVITY CELL AND TEMPERATURE COMPENSATOR FOR CCR-1
C-2.....DEIONIZER OUTLET CONDUCTIVITY CELL AND TEMPERATURE COMPENSATOR FOR CCR-1
C-3.....GENERATOR OUTLET CONDUCTIVITY CELL AND TEMPERATURE COMPENSATOR FOR CCR-1
SCP-A,B...STATOR COOLANT PUMP MAIN AND RESERVE
TCP-1.....100 OHM TEMPERATURE DETECTOR FOR PURCHASER'S USE (OUTLET)
TCT-1.....TEMPERATURE DETECTOR FOR T-1 (METER IN CABINET)
TFP-2.....100 OHM TEMPERATURE DETECTOR FOR PURCHASER'S USE (INLET)
TFT-2.....TEMPERATURE DETECTOR FOR T-2 (METER IN CABINET)
Y-07.....PROPORTIONING VALVE FOR CONSTANT INLET WATER TEMPERATURE
Y-37.....GAUGE CONNECTION FOR SETTING CONTROLS (APPROX. 1 FT. BELOW GENERATOR CASING)
Y-63.....PRESSURE REDUCING VALVE

YDE-1.....DEIONIZER
YFL-1.....INLET FLOWMETER AND SWITCH-ALARM AT FLOW 234 GPM +12-0

YFL-2.....DEIONIZER FLOWMETER
YFI-1.....FILTER GENERATOR INLET
YFI-2.....FILTER FOR MAKE-UP WATER
YGA-2.....PRESSURE GAUGE (GENERATOR INLET) (0-100 P.S.I.)
YGA-3.....PRESSURE GAUGE (PUMP DISCHARGE) (0-200 P.S.I.)
YGA-4.....PRESSURE GAUGE (YFI-1 INLET) (0-100 P.S.I.)
YGA-5.....PRESSURE GAUGE (YFI-1 OUTLET) (0-100 P.S.I.)
YGA-6.....PRESSURE GAUGE (YDE-1 INLET) (0-30 P.S.I.)
YGA-7.....PRESSURE GAUGE (YDE-1 OUTLET) (0-30 P.S.I.)
YST-1.....STRAINER GENERATOR INLET
YST-2.....STRAINER DEIONIZER OUTLET

YPC-63....DIFFERENTIAL PRESSURE CONTROLLER FOR VALVE Y-63 (25 SCFH MAX.)
Y-19.....STOP CHECK VALVE-ALLOWS MAKE-UP WATER FLOW ONLY THROUGH DEIONIZER ALSO USED TO THROTTLE NORMAL FLOW THROUGH DEIONIZER TO 50 G.P.M.

NOTES:

LEGEND

Ⓓ DRAIN CONNECTION
Ⓒ CONDUCTIVITY CELL

CAD FILE: V3E.713.21.0100.001-.2501
THIS IS A COMPUTER GENERATED DWG. DO NOT REVISE IT MANUALLY

REVISION 11 OF THIS DRAWING WAS REDRAWN FROM GE 234R166, REV. 9.

NO.	DWG. NO.	TITLE
3	BR-2001 SH3	MECHANICAL DRAWING INDEX
2	BR-2001 SH2	ABBREVIATIONS
1	BR-2001 SH1	MECHANICAL SYMBOLS

REFERENCES

NANCY A. CARLSON 1-30-97 DRAWN DATE
CHECKED DATE
DESIGN LEADER N/A DATE
ENGINEER DATE
MANAGER APPROVAL 7/11/97 DATE

GPU NUCLEAR

GENERATOR STATOR COOLING SYSTEM
FLOW DIAGRAM

OYSTER CREEK | DWG. NO. GE 234R166 | SH. 1 OF 1 | REV. 25
SCALE: NONE
ENG.MECH. | BA | W.C.

GE 234R166 REV. 25 SH. 1 OF 1

REVISIONS		
REV.	ZONE	REFERENCES
63	ALL	ISI BOUNDARY INFO INCORPORATED

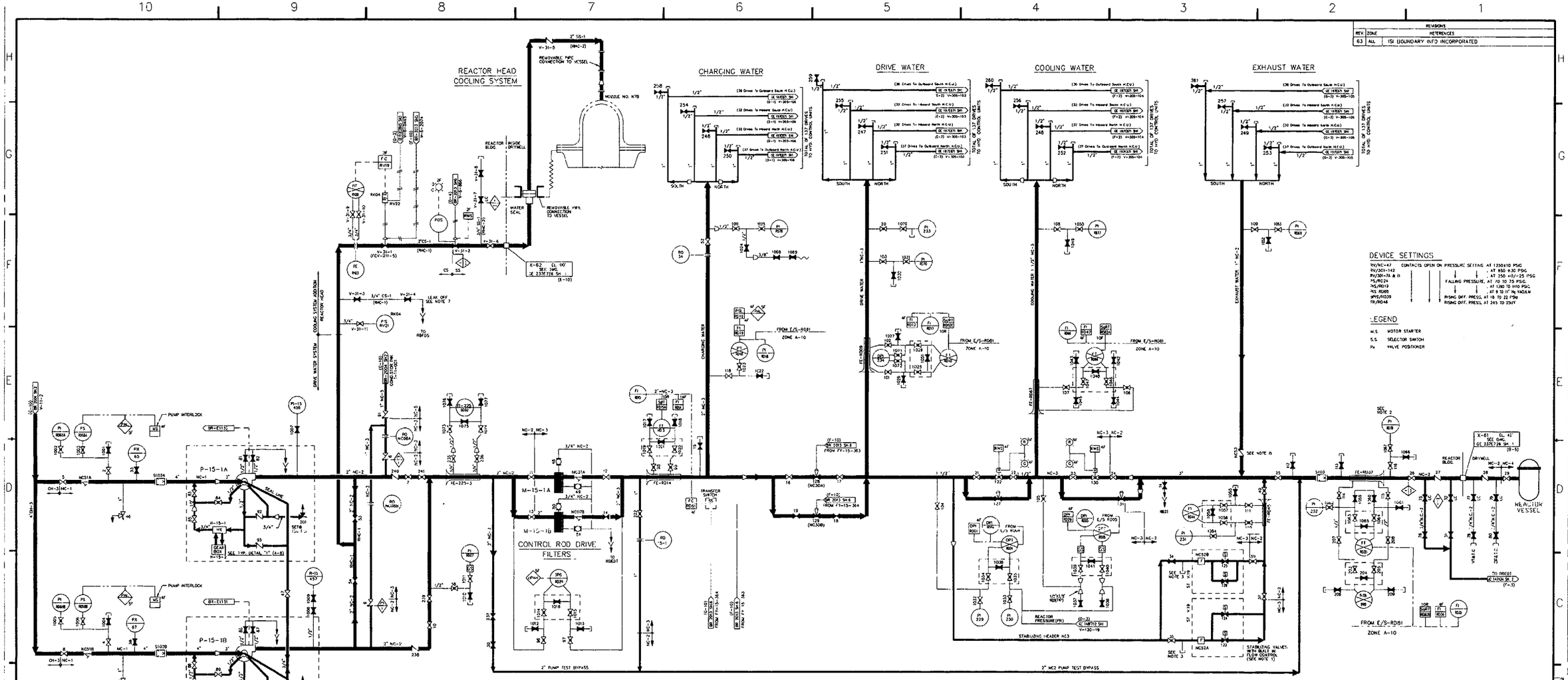

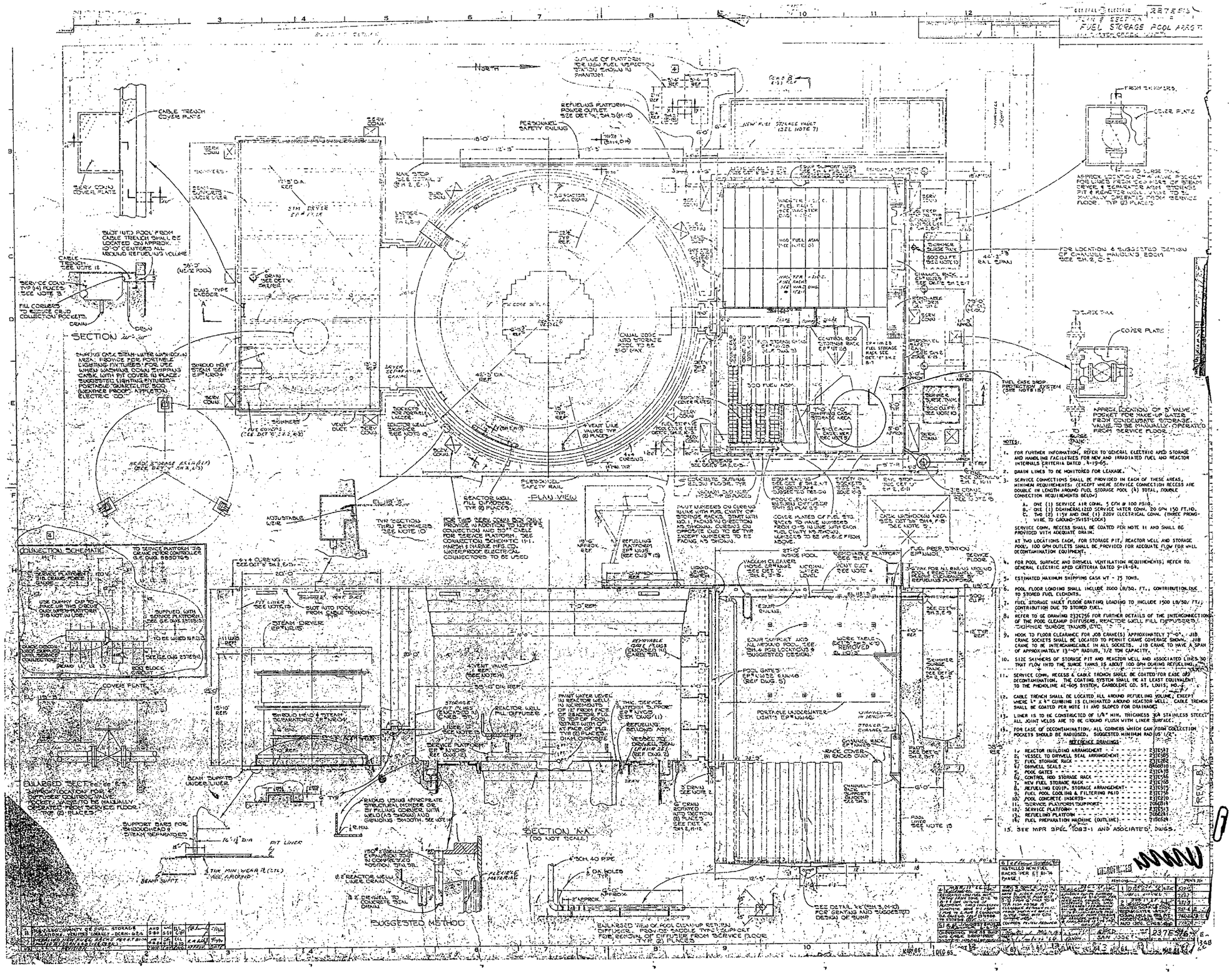
FUEL STORAGE POOL AREA
PLAN VIEW
SECTION
SECTION AA
(DO NOT SCALE)
SUGGESTED METHOD
CONNECTION SCHEMATIC
NORTH
NOTES:
1. FOR FURTHER INFORMATION, REFER TO GENERAL ELECTRIC APED STORAGE AND HANDLING FACILITIES FOR NEW AND IRRADIATED FUEL AND REACTOR INTERNALS CRITERIA DATED 4-19-65.
2. DRAIN LINES TO BE MONITORED FOR LEAKAGE.
3. SERVICE CONNECTIONS SHALL BE PROVIDED IN EACH OF THESE AREAS, MINIMUM REQUIREMENTS: (EXCEPT WHERE SERVICE CONNECTION RECESS ARE DOUBLE IN LENGTH AROUND FUEL STORAGE POOL (A) TOTAL, DOUBLE CONNECTION REQUIREMENTS BELOW)
A. ONE (1) SERVICE AIR CONN. 5 CFM @ 100 PSIG.
B. ONE (1) DEMINERALIZED SERVICE WATER CONN. 20 GPM 150 FT.HD.
C. TWO (2) 115V AND ONE (1) 220V ELECTRICAL CONN. (THREE PRONG-WIRE TO GROUND-TWIST-LOCK)
SERVICE CONN. RECESS SHALL BE COATED PER NOTE 11 AND SHALL BE PROVIDED WITH ADEQUATE DRAIN.
AT TWO LOCATIONS EACH, FOR STORAGE PIT, REACTOR WELL AND STORAGE POOL, 100 GPM OUTLETS SHALL BE PROVIDED FOR ADEQUATE FLOW FOR WALL DECONTAMINATION EQUIPMENT.
4. FOR POOL SURFACE AND DRYWELL VENTILATION REQUIREMENTS, REFER TO GENERAL ELECTRIC APED CRITERIA DATED 9-14-64.
5. ESTIMATED MAXIMUM SHIPPING CASK WT - 75 TONS.
6. POOL FLOOR LOADING SHALL INCLUDE 2000 LB/SQ. FT., CONTRIBUTION DUE TO STORED FUEL ELEMENTS.
7. FUEL STORAGE VAULT FLOOR GRATING LOADING TO INCLUDE 1500 LB/SQ. FT., CONTRIBUTION DUE TO STORED FUEL.
8. REFER TO GE DRAWING 2372756 FOR FURTHER DETAILS OF THE INTERCONNECTIONS OF THE POOL CLEANUP DIFFUSERS, REACTOR WELL FILL DIFFUSERS, SKIMMER SURGE TANKS, ETC.
9. HOOK TO FLOOR CLEARANCE FOR JOB CRANE(S) APPROXIMATELY 7'-0". JIB CRANE SOCKETS SHALL BE LOCATED TO PERMIT CRANE COVERAGE SHOWN. JIB CRANE TO BE INTERCHANGEABLE IN ALL SOCKETS. JIB CRANE TO HAVE A SPAN OF APPROXIMATELY 13'-0" RADIUS, 1/2 TON CAPACITY.
10. SIZE SKIMMERS OF STORAGE PIT AND REACTOR WELL AND ASSOCIATED LINES SO THAT FLOW INTO THE SURGE TANKS IS ABOUT 100 GPM DURING REFUELING.
11. SERVICE CONN. RECESS & CABLE TRENCH SHALL BE COATED FOR EASE OF DECONTAMINATION. THE COATING SYSTEM SHALL BE AT LEAST EQUIVALENT TO THE PHENOLINE AE-605 SYSTEM, CAROLINE CO. ST. LOUIS, MO.
12. CABLE TRENCH SHALL BE LOCATED ALL AROUND REFUELING VOLUME, EXCEPT WHERE 4" x 4" CURBING IS ELIMINATED AROUND REACTOR WELL. CABLE TRENCH SHALL BE COATED PER NOTE 11 AND SLOPED FOR DRAINAGE.
13. LINER IS TO BE CONSTRUCTED OF 1/8" MIN. THICKNESS 304 STAINLESS STEEL. ALL JOINT WELDS ARE TO BE GROUND FLUSH WITH LINER SURFACE.
14. FOR EASE OF DECONTAMINATION, ALL CORNERS WHICH CAN FORM COLLECTION POCKETS SHOULD BE RADIUSED. SUGGESTED MINIMUM RAD US 1/2".
REFERENCE DRAWINGS
1. REACTOR BUILDING ARRANGEMENT - - - - - - - - 2376547
2. VESSEL TO DRYWELL SEAL ARRANGEMENT - - - - - 2376685
3. FUEL STORAGE RACK - - - - - - - - - - - - - 2376286
4. DRYWELL SEALS - - - - - - - - - - - - - - - 6460916
5. POOL GATES - - - - - - - - - - - - - - - - 2376418
6. CONTROL ROD STORAGE RACK - - - - - - - - - 2376456
7. NEW FUEL STORAGE RACK - - - - - - - - - - - 2376768
8. REFUELING EQUIP. STORAGE ARRANGEMENT - - - - 2376572
9. FUEL POOL COOLING & FILTERING PATH - - - - - 2376758
10. POOL CONCRETE INSERTS - - - - - - - - - - - 2376210
11. SERVICE PLATFORM SUPPORT - - - - - - - - - 7086814
12. SERVICE PLATFORM - - - - - - - - - - - - - 2376513
13. REFUELING PLATFORM - - - - - - - - - - - - 7086541
14. FUEL PREPARATION MACHINE (OUTLINE) - - - - 7186628
15. SEE MPR SPEC. 1083-1 AND ASSOCIATED DWGS.
GENERAL ELECTRIC
SAN JOSE
2376596

WALL MOUNT DETAIL
FUEL STORAGE POOL ARRG'T.
FOR USE WITH OYSTER CREEK UNIT #1

ENLARGED SECTION
SHOWING SUGGESTED DESIGN OF MANUALLY OPERATED CHANNEL HANDLING BOOM. ASM. TO BE REMOVABLE

DETAIL "b"
SHOWING CURBING DETAIL AND STUD LOCATION FOR LIQ. LEVEL SWITCH 100 LB. VERTICAL LOAD PER STUD

ENLARGED DET. "a" (6-5)
SHOWING STUD ON LOWER PLATE ONLY. (TYP FOR (2) FREP STATION)
NOTE: AFTER FUEL PREP STATION IS LOCATED IN PLACE, SEAT NUT AGAINST BEARING PAD AND BACK OFF ONE FULL TURN THEN WELD NUT IN PLACE.

DETAIL "c"
100 LB VERT. LOAD PER STUD
VACUUM CLEANER HOSE STUDS IN REFUELING STORAGE POOL CORNER

DETAIL "V"
HEAD HOLDING PEDESTAL (DWG 107C5349)
SH.1, F-2
SCALE: 1½"=12"

ENLARGED SECT. Y-Y (6-5)
TYP FOR (2) FUEL PREP STATION.

SECTION F-F SHEET 7
DRYWELL FILL DIFFUSER.
(TYP 2 PLACES)
SIMILAR TO POOL CLEAN-UP RETURN DIFFUSER. SH.1, L-8 EXCEPT DIFFUSER MAY BE PERMANENTLY ATTACHED TO SUPPORTS.

ENLARGED SECT. "hh-hh"

DETAIL "S"
SHOWING LOCATION OF EQUIP. SUPPORT RAILING.

DETAIL "W"
SHOWING SUGGESTED RAIL INSTALLATION (TYP)
DESIGN RAIL FOR 10,000 LB/WHEEL

DETAIL "K"
(2) IN REACTOR WELL
(1) IN STORAGE PIT

DET. "n"
REMOVABLE LADDER (ALUMINUM)
(SUGGESTED INSTALLATION)
IF CODE PERMITS, LOWER (8'-0") PORTION OF LADDER MAY BE PERMANENTLY INSTALLED.

DET. "d" SURGE TANK
(TYP. OF 2 TANKS)
MAY BE MADE OF CARBON STEEL
NOTE: ONLY PROVIDED FOR 1 TANK ONLY.

ENLARGED SECT. X-X SH.1 (6-5)
SHOWING MTG PLATE FOR NEW FUEL INSPECTION STATION

DET. "n"
SHOWING POWER OUTLET & GUIDES FOR REFUELING PLATFORM
POWER REQUIREMENT
480V, 60HZ, 3φ, 15 AMPS
SEE DWG. 4E103E168T SH.4

ENLARGED SECT. "ff" (6-6 & 6-8)
SHOWING SUGGESTED DESIGN OF REMOVABLE PLATFORM, NO PERMANENT SUPPORT OR REINFORCEMENT TO BE IN POOL.
DESIGN PLATFORM TO BE SUPPORTED FROM 4" HIGH CURBING.
DESIGN LOAD = 50#/SQ.FT.

APPD. 237E516
SAN. HOUSE

GENERAL ELECTRIC 237E516

UNLESS OTHERWISE SPECIFIED USE THE FOLLOWING — AREAS PRACTICES | LIMITATIONS

FUEL STORAGE POOL ARRGT

FIRST MADE FOR OYSTER CREEK UNIT #1

PLAN VIEW
NEW FUEL STORAGE VAULT
SCALE 1/4 = 1'-0"

ENLARGED VIEW
DET "A"
SCALE 3"/12
THE DESIGN OF EACH HOLD DOWN BOLT SHALL WITHSTAND 500 LBS. HORIZONTAL SHEAR

SUGGESTED DESIGN OF BEARING SPOOL

DETAIL "B" TYP
SUGGESTED METHOD OF INSTALLING GUIDE ANGLES OF FUEL RACKS
SCALE 3"/12

DET "M" SH. 1, 3-11
SHOWING WEIR HEIGHT & OPENING
SCALE 1"=12

DETAIL "C"
SCALE 1/2"=12"

DETAIL "L"
POOL GATE LUG PLACEMENT & GASKET SURFACES
SCALE 1/2"=12"
(EST WT OF POOL GATE 1200 LBS)

SECT BB
SCALE 1/2"=12"

SECT CC

SECT DD

LOCATION OF GATE STORAGE LUGS
SCALE 1/2"=12"

GATE STORAGE LUGS
(TYP 6)
SCALE 6"=12"

STN STL LUG DETAIL (TYP 12)
*-DESIGN LUG INSERT TO WITHSTAND FORCE OF 1500 LBS IN THE DIRECTION & AT POINT SHOWN
SCALE 6"=12"

DETAIL "S"
SUGGESTED DETAIL & LOCATION OF TABLE & SUPPORT GUIDES

TABLE TO BE DESIGNED TO SUPPORT A UNIFORMLY DISTRIBUTED LOAD OF 300 LB PER SQUARE FOOT. TABLE TOP IS TO BE READILY REMOVABLE FROM ABOVE FOR INSTALLATION OF TOOLS, JIGS OR OTHER FIXTURES. TABLE TO BE READILY MOVED TO WORKING AREA FOR MAX OPERATOR EFFICIENCY. FRAME TO BE OF WELDED ALUMINUM CONSTRUCTION.

DETAIL "U"
SHOWING GRATING OVER POOL SUMP GRATING TO BE STN STL OR ALUM
LOAD REQ'D 300 LBS FT

SECTION "W-W"

GRATING OVER SUMP TO BE REMOVABLE FROM ABOVE, DO NOT BOLT DOWN REMAINDER OF GRATING TO BE BOLTED IN PLACE.

GRATING TO BE FLUSH WITH FLOOR TYP

SLOPE SUMP SHARPLY AS SHOWN TO FACILITATE CRUD CLEAN-UP WITH VACUUM CLEANER

INTERNAL PORTION — EXTERNAL PORTION

CORRECTED AS NOTED

REVISIONS | PRINTS TO

APPR. | 237E516

GENERAL ELECTRIC 237E516

FUEL STORAGE POOL ARRGT

FOR USE ON OYSTER CREEK UNIT #1

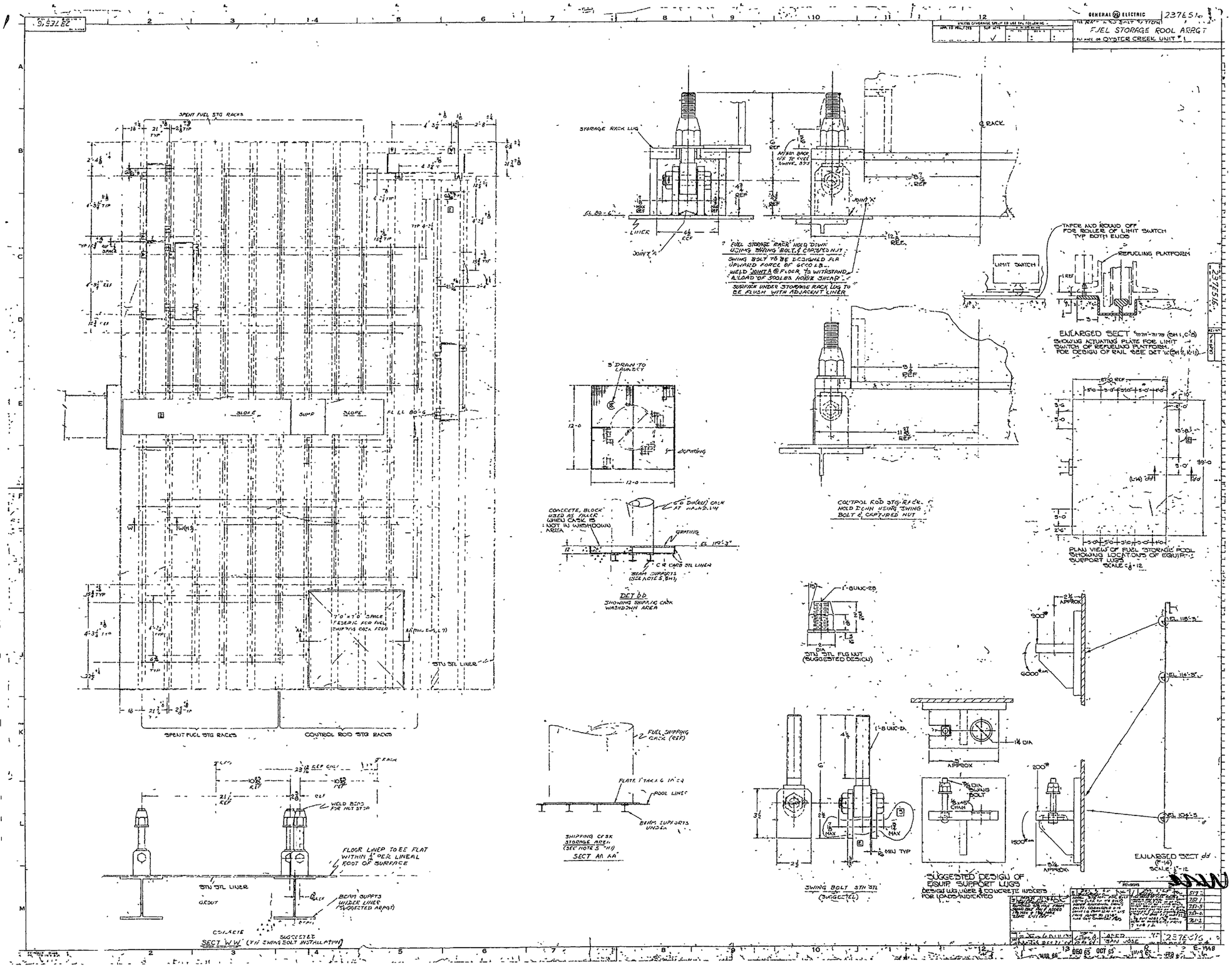

REVISIONS			
			8/7
			7/21
			7/17-8
			7/17-6
			7/11-2

APPD. SAN JOSE

237E516

MAR 66 DEC 65 OCT 65 JUN 65 FEB 65 E-1948

REVISIONS		
REV	ZONE	DESCRIPTION
42		ECO C314812

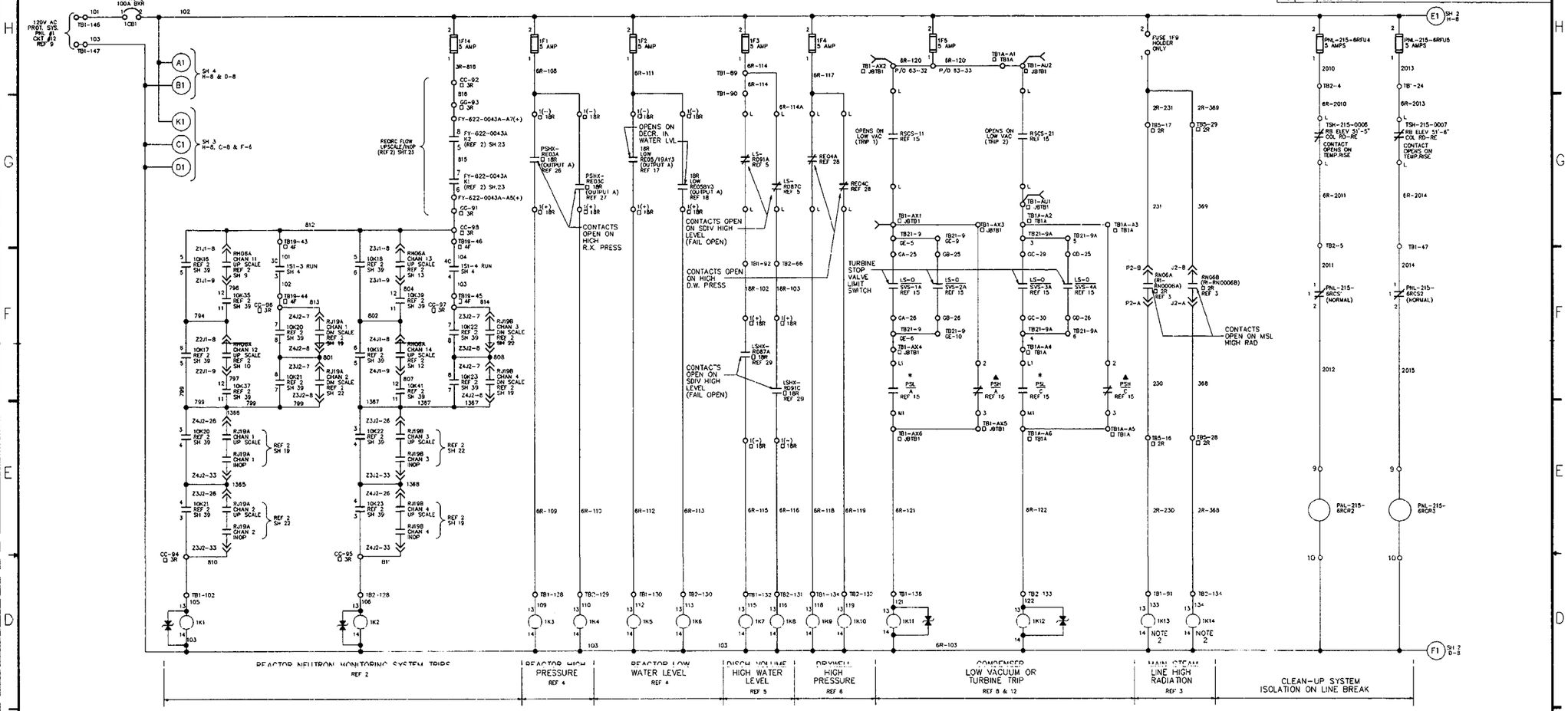

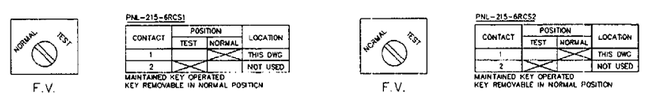

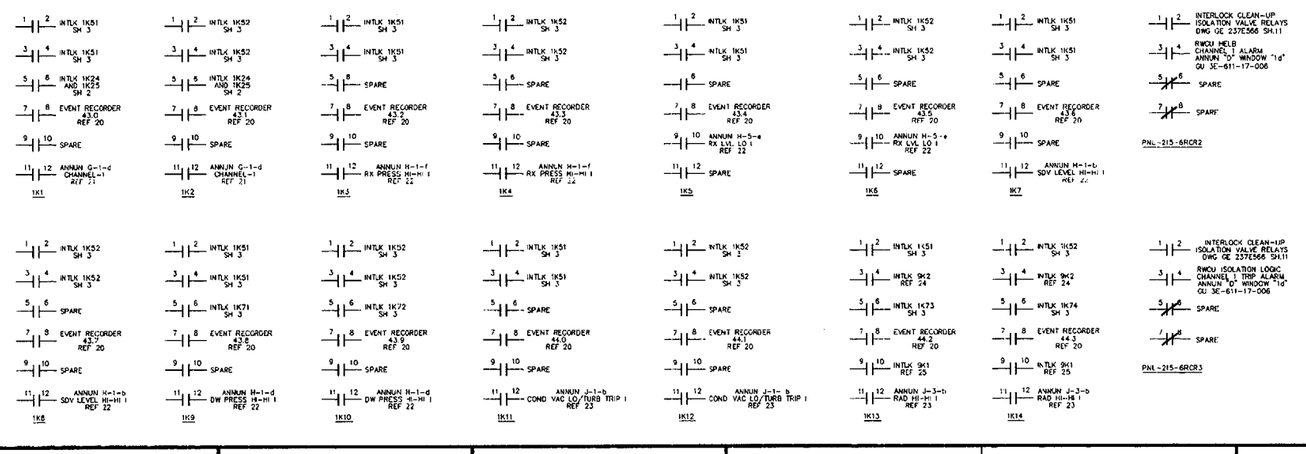

NO.	DWG. NO.	TITLE
30	GE 112C2265	CONNECTION DIAGRAM PANEL GR
29	FO 81N-46B71-A1-CD05	SCRAM DISCHARGE VOLUME PANEL 18R REAR
28	GE 112C2827 SH 2	RACK (RH03,RC01C PUMP REACTOR PROT. & MSS SYS
27	FO 88N-42B54-CD-0005 & 0007	LOOP DIAG RE03C & RE03D PANEL 18R REAR
26	FO 88N-42B54-CD-0001 & 0003	LOOP DIAG RE03A & RE03B PANEL 18R FRONT
25	BR E713 SH 101	MISC ELEM & BLOCK DIAG VALVES V-7-29 & V-7-3 (11-E-15 & 11-E-19)
24	GE 148F742	ELEM DIAG OFF GAS & STACK GAS MONITORS
23	GU 3E-611-17-011	ELEC ELEM DIAG CONTROL PANEL 3F/6F-ANNUN J
22	GU 3E-611-17-010	ELEC ELEM DIAG CONTROL PANEL 3F/6F-ANNUN H
21	GU 3E-611-17-009 SH 1	ELEC ELEM DIAG CONTROL PANEL 3F-ANNUN C
20	GE 886D301	ELEM DIAG SELECTED INPUTS TO PLANT COMPUTER
19	GE 112C2864	CONNECTION DIAGRAM PANEL 2R
18	FO 86N36864-A2-C001	LOOP DIAG RE05B PNL 18R REAR
17	FO 86N36864-A3-C001	LOOP DIAG RE05/19A PNL 18R FRONT
16	GE 112C2247	CONNECTION DIAGRAM PANEL 4F
15	BR 3024	TURBINE CONTROL CONN DIAGRAM SH 1
14	BR 3025	TURBINE CONTROL CONN DIAGRAM SH 2
13	BR 3026	TURBINE CONTROL CONN DIAGRAM SH 3
12	GE 233A309 SH 1&2	TURBINE CONTROL DIAGRAM
11	GU 3E-662-18-1002	CONNECTION DIAGRAM PANEL 18R
10	GE 237E699	CONNECTION DIAGRAM PANEL 3R
9	GU 3C-733-11-010	PANEL SCHEDULE PROTECTION SYS PANEL NO. 1 (PSP-1)
8	GE 108C5456 SH 2,3,6 & 10	G.E. TURBINE WIRING DIAGRAM
7	GE 237E798	REACTOR AND RECIRC LOOP P&ID
6	GE 237E726	DRYWELL & SUPPRESSION P&ID
5	GE 137E811	CRD HYDRAULIC SYSTEM P&ID
4	GE 148F712	REACTOR VESSEL LEVEL/PRESS/TEMP P&ID
3	GE 886D757	STEAM LINE RADIATION MONITOR ELEM
2	GE 706E812	NEUTRON MONITORING SYSTEM ELEM
1	GE 237E912	REACTOR MANUAL CONTROL SYSTEM ELEM

REFERENCES

LEGEND:

- * - INDICATES ACCELERATION RELAY OUTPUT PRESSURE SWITCH.
- ▲ - INDICATES THIRD STAGE TURBINE PRESSURE SWITCH.
- ☐ 3R - INDICATES DEVICE LOCATED IN CONTROL PANEL 3R.
- ☐ 2R - INDICATES DEVICE LOCATED IN CONTROL PANEL 2R.
- ☐ 4F - INDICATES DEVICE LOCATED IN CONTROL PANEL 4F.
- ☐ 18R - INDICATES DEVICE LOCATED IN CONTROL PANEL 18R.
- ☐ JBTB1 - JUNCTION BOX TB1 AT TURBINE STANDARD.
- ☐ TB1A - TERMINAL BOX-1A.
- L - LOCAL TERMINAL
- O—< - INDICATES BANANA TEST JACKS

NOTE:

1. FOR CMS 2 INFORMATION RETRIEVAL "0" DIGIT MAY BE REQUIRED TO BE ADDED TO COMPONENT TAG NO.
   EXAMPLE:
   COMPONENT TAG NO. - LSHX-RD91C
   CMS2 - LSHX-R00091C
   (THIS NOTE ALSO APPLIES TO SH 2 THRU SH 2C)
2. RELAYS 1K13 & 1K14 ABANDONED IN PLACE & CONTACT TERMINALS ENERGIZED.
3. UNLESS OTHERWISE NOTED ALL DEVICES ARE LOCATED IN CONTROL PANEL GR

CAD FILE NAME: GE 237E566 S1 R42

REVISION 29 OF THIS DRAWING WAS REDRAWN FROM GE 237E566 SH 1A REV 37. REVISION 37 OF THIS DRAWING WAS TRANSLATED TO AUTOCAD FROM CADIAN FILE: V36,641,17,0005,C01-,3701

NUCLEAR SAFETY RELATED USE

THIS IS A COMPUTER GENERATED DRAWING DO NOT REVISE IT MANUALLY

		DATE
DRAWN	E.BRENNAN	11/08/99
SUPERVISOR		
PROJECT ENGINEER		
DESIGN ENGINEER		
DESIGN ENGINEER		

GPU NUCLEAR

REACTOR PROTECTION SYS ELECTRICAL ELEMENTARY DIAGRAM

CHANNEL 1

OYSTER CREEK

DWG. NO. GE 237E566 | SH. 1 | REV. 42

SCALE : NONE

PIMS #

DWG. NO. GE 237E566 SH 1

STCK #7

REVISIONS		
REV	ZONE	DESCRIPTION
38		ECO 03X6530

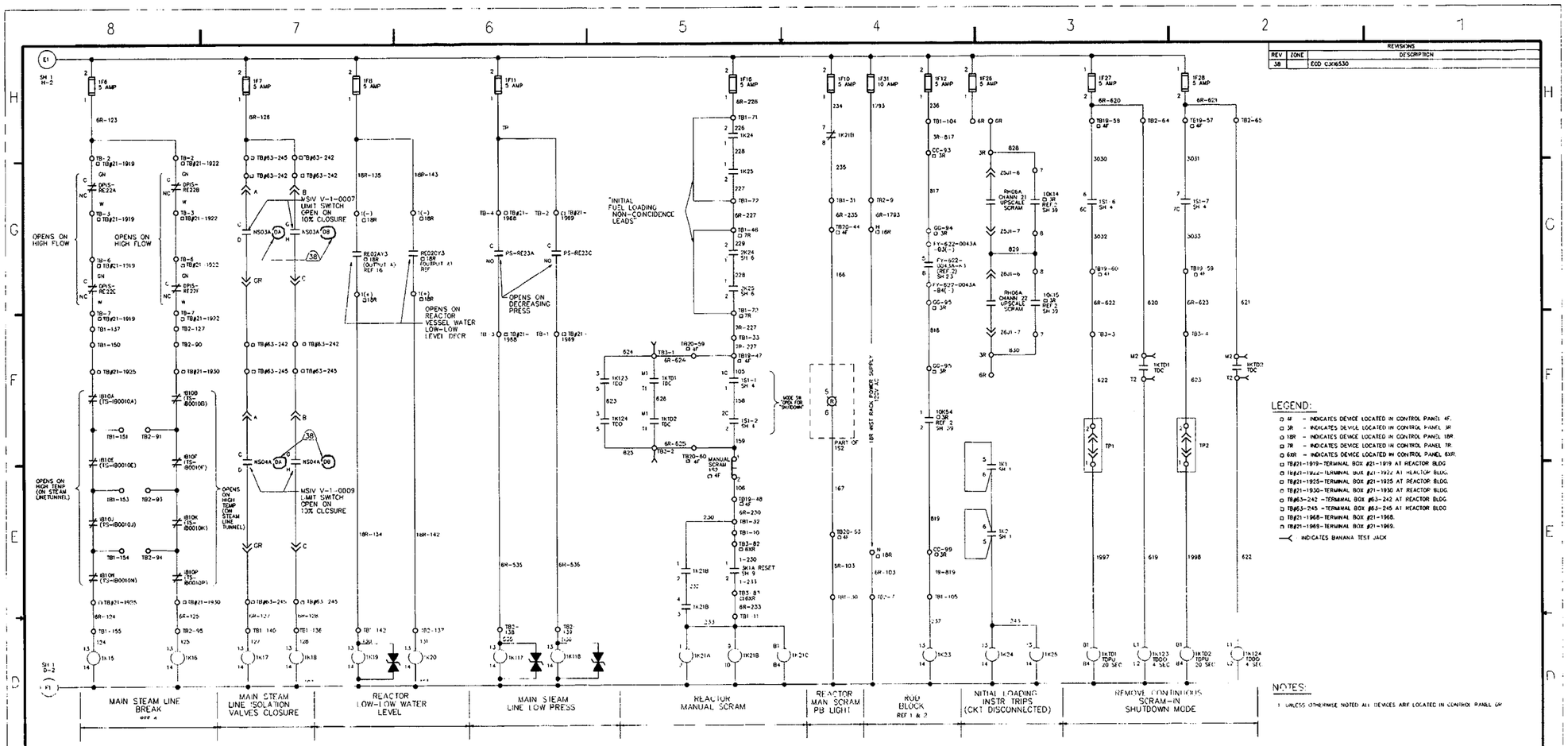

LEGEND:

- 4F - INDICATES DEVICE LOCATED IN CONTROL PANEL 4F.
- 3R - INDICATES DEVICE LOCATED IN CONTROL PANEL 3R
- 18R - INDICATES DEVICE LOCATED IN CONTROL PANEL 18R
- 7R - INDICATES DEVICE LOCATED IN CONTROL PANEL 7R.
- 6XR - INDICATES DEVICE LOCATED IN CONTROL PANEL 6XR.
- TB#21-1919- TERMINAL BOX #21-1919 AT REACTOR BLDG.
- TB#21-1922- TERMINAL BOX #21-1922 AT REACTOR BLDG.
- TB#21-1925- TERMINAL BOX #21-1925 AT REACTOR BLDG.
- TB#21-1930- TERMINAL BOX #21-1930 AT REACTOR BLDG.
- TB#63-242 -TERMINAL BOX #63-242 AT REACTOR BLDG.
- TB#63-245 -TERMINAL BOX #63-245 AT REACTOR BLDG.
- TB#21-1968- TERMINAL BOX #21-1968.
- TB#21-1969- TERMINAL BOX #21-1969.
- INDICATES BANANA TEST JACK

NOTES:

1. UNLESS OTHERWISE NOTED ALL DEVICES ARE LOCATED IN CONTROL PANEL 6R

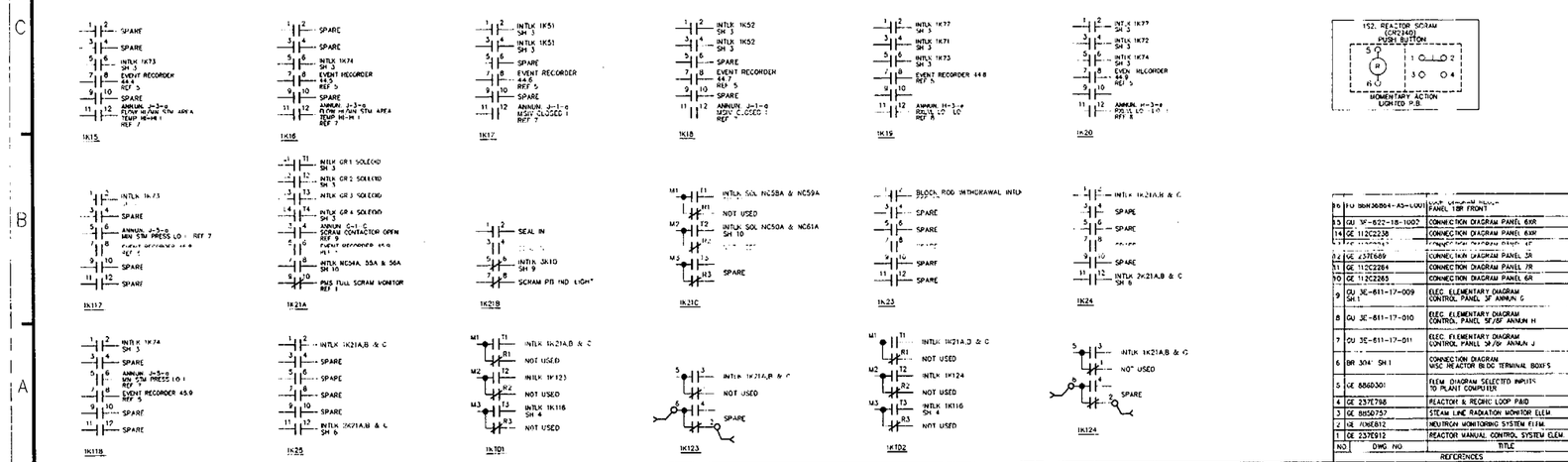

NO	DWG NO	TITLE
16	GU 06N36864-A3-LOU1	LOOP [illegible] PANEL 18R FRONT
13	GU 3F-822-18-1002	CONNECTION DIAGRAM PANEL 6XR
14	GE 112C2238	CONNECTION DIAGRAM PANEL 6XR
12	GE 237E689	CONNECTION DIAGRAM PANEL 3R
11	GE 112C2284	CONNECTION DIAGRAM PANEL 7R
10	GE 112C2265	CONNECTION DIAGRAM PANEL 6R
9	GU 3E-811-17-009 SH 1	ELEC. ELEMENTARY DIAGRAM CONTROL PANEL 3F ANNUN G
8	GU 3E-811-17-010	ELEC. ELEMENTARY DIAGRAM CONTROL PANEL 3F/8F ANNUN H
7	GU 3E-811-17-011	ELEC. ELEMENTARY DIAGRAM CONTROL PANEL 3F/8F ANNUN J
6	BR 304 SH 1	CONNECTION DIAGRAM MISC REACTOR BLDG TERMINAL BOXES
5	GE 886D301	ELEM DIAGRAM SELECTED INPUTS TO PLANT COMPUTER
4	GE 237E798	REACTOR & RECIRC LOOP PAID
3	GE 885D757	STEAM LINE RADIATION MONITOR ELEM.
2	GE 106E812	NEUTRON MONITORING SYSTEM ELEM.
1	GE 237E912	REACTOR MANUAL CONTROL SYSTEM ELEM.

REFERENCES

CAD FILE NAME GE 237E566 S2 R38

REVISION 34 OF THIS DRAWING WAS TRANSLATED TO AUTOCAD FROM CADAM FILE V3E.641.17.0005.002-3401

NUCLEAR SAFETY RELATED USE

THIS IS A COMPUTER GENERATED DRAWING. DO NOT REVISE IT MANUALLY

DRAWN G BARBY 08/29/2000

AmerGen

REACTOR PROTECTION SYS
ELECTRICAL ELEMENTARY DIAGRAM
CHANNEL 1

OYSTER CREEK | DWG NO GE 237E566 | SH 2 | REV 38 | SCALE NONE

PIMS #

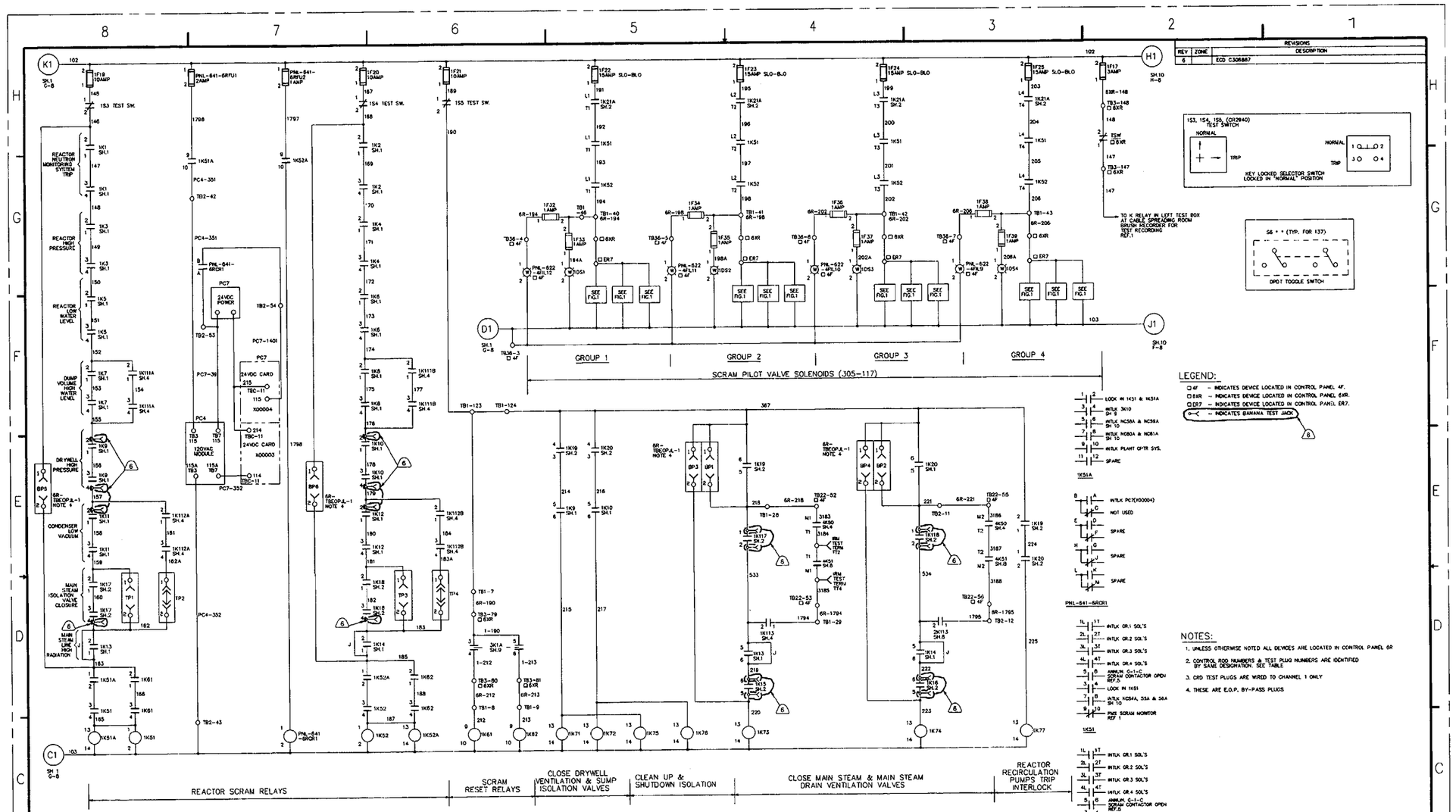
REACTOR SCRAM RELAYS
SCRAM RESET RELAYS
CLOSE DRYWELL VENTILATION & SUMP ISOLATION VALVES
CLEAN UP & SHUTDOWN ISOLATION
CLOSE MAIN STEAM & MAIN STEAM DRAIN VENTILATION VALVES
REACTOR RECIRCULATION PUMPS TRIP INTERLOCK
GROUP 1
GROUP 2
GROUP 3
GROUP 4
SCRAM PILOT VALVE SOLENOIDS (305-117)
REACTOR NEUTRON MONITORING SYSTEM TRIP
REACTOR HIGH PRESSURE
REACTOR LOW WATER LEVEL
DUMP VOLUME HIGH WATER LEVEL
DRYWELL HIGH PRESSURE
CONDENSER LOW VACUUM
MAIN STEAM ISOLATION VALVE CLOSURE
MAIN STEAM LINE HIGH RADIATION
TO K RELAY IN LEFT TEST BOX AT CABLE SPREADING ROOM BRUSH RECORDER FOR TEST RECORDING REF.1
153, 154, 155 (CH12940) TEST SWITCH
NORMAL
TRIP
KEY LOCKED SELECTOR SWITCH LOCKED IN "NORMAL" POSITION
S6 * * (TYP. FOR 137)
DPDT TOGGLE SWITCH
LEGEND:
□ 4F - INDICATES DEVICE LOCATED IN CONTROL PANEL 4F.
□ 6XR - INDICATES DEVICE LOCATED IN CONTROL PANEL 6XR.
□ ER7 - INDICATES DEVICE LOCATED IN CONTROL PANEL ER7.
-⊂ - INDICATES BANANA TEST JACK
NOTES:
1. UNLESS OTHERWISE NOTED ALL DEVICES ARE LOCATED IN CONTROL PANEL 6R
2. CONTROL ROD NUMBERS & TEST PLUG NUMBERS ARE IDENTIFIED BY SAME DESIGNATION. SEE TABLE
3. CRD TEST PLUGS ARE WIRED TO CHANNEL 1 ONLY
4. THESE ARE E.O.P. BY-PASS PLUGS
CHANNEL 1
CHANNEL 2
TO OTHER FUSES FOR 305-117** SOLENOIDS
TO OTHER FUSES FOR 305-118** SOLENOIDS
THYPECTOR (TYP.) FOR DISTRIBUTION OF WIRES TO ERC7 PANELS SEE DWG. GE238E558
TEST PLUG XK-32 NOTE 2&3
TOGGLE SW. TEST (DPST)
WIRE IS COMMON TO ALL TEST PLUG TERMINAL NO. 1
REFER TO COMM. DIAG FOR WIRE NO'S WIRE FROM TEST SWITCH TO TERMINALS SHALL BE NO'S 18 AWG.
** ADD ROD DESIGNATION FROM TABLE AT RIGHT
FIGURE-1
TYP. FOR EACH ROD
TEST PLUG ROD DESIGNATION NUMBER
GROUP 1 | GROUP 2 | GROUP 3 | GROUP 4
18-03 | 22-03 | 14-07 | 10-07
26-03 | 30-03 | 22-07 | 18-07
34-03 | 10-11 | 30-07 | 26-07
06-11 | 18-11 | 38-07 | 34-07
14-11 | 26-11 | 10-15 | 42-07
22-11 | 34-11 | 18-15 | 06-15
30-11 | 42-11 | 26-15 | 14-15
38-11 | 06-19 | 34-15 | 22-15
46-11 | 14-19 | 42-15 | 30-15
02-19 | 22-19 | 50-15 | 38-15
10-19 | 30-19 | 06-23 | 46-15
18-19 | 38-19 | 14-23 | 02-23
26-19 | 46-19 | 22-23 | 10-23
34-19 | 03-27 | 30-23 | 18-23
42-19 | 10-27 | 38-23 | 26-23
06-27 | 18-27 | 46-23 | 34-23
14-27 | 26-27 | 02-31 | 42-23
22-27 | 34-27 | 10-31 | 50-23
30-27 | 42-27 | 18-31 | 06-31
38-27 | 50-27 | 26-31 | 14-31
46-27 | 06-35 | 34-31 | 22-31
02-35 | 14-35 | 42-31 | 30-31
10-35 | 22-35 | 50-31 | 38-31
18-35 | 30-35 | 06-39 | 46-31
26-35 | 38-35 | 14-39 | 10-38
34-35 | 46-35 | 22-39 | 18-38
42-35 | 10-43 | 30-39 | 26-38
50-35 | 18-43 | 38-39 | 34-38
14-43 | 26-43 | 46-39 | 42-38
22-43 | 34-43 | 10-47 | 06-43
30-43 | 42-43 | 18-47 | 14-47
38-43 | 50-47 | 26-47 | 22-47
46-43 | 22-51 | 34-47 | 30-47
18-51 | 30-51 | 42-47 | 34-51
26-51
GROUP 1
GROUP 2
GROUP 3
LOCK IN 1K51 & 1K51A
INTLK 3K10 SH 9
INTLK NC58A & NC59A SH 10
INTLK NC60A & NC61A SH 10
INTLK PLANT OPTR SYS.
SPARE
1K52A
INTLK 1K51
1K61
INTLK 6K37 & (V22-28/22-1) SH 15
INTLK V22-29/22-2 SH 15
INTLK 6K46 & (V22-28/22-1) SH 18
INTLK V28-18/23-22 SH 18
ANNUN C-7-C RPS ISOLATION I REF 5
CLEAN UP & SHUTDOWN SH 11
1K82
1K71
1K78
1K77
1K74
1K75
1K72
1K73
INTLK 6K25 SH 12
INTLK 6K26 SH 14
INTLK 6K27 SH 13
INTLK 6K28 SH 14
INTLK 6K33 SH 12
INTLK 6K34 SH 14
INTLK 6K35 SH 13
INTLK 6K36 SH 14
LOCK IN 1K51 & 1K51A
INTLK 3K10 SH 9
INTLK NC58A & NC59A SH 10
INTLK NC60A & NC61A SH 10
INTLK PLANT OPTR SYS.
SPARE
1K51A
INTLK PC7(X00004)
NOT USED
PNL-641-6RCR1
INTLK CR.1 SOL'S
INTLK CR.2 SOL'S
INTLK CR.3 SOL'S
INTLK CR.4 SOL'S
ANNUN. G-1-C SCRAM CONTACTOR OPEN REF.5
LOCK IN 1K51
INTLK NC54A, 55A & 56A SH 10
PNS SCRAM MONITOR REF 1
1K51
LOCK IN 1K52
1K52
CAD FILE NAME: GE 237E566 S3 R6
REVISION 5 OF THIS DRAWING WAS TRANSLATED TO AUTOCAD FROM CADAM FILE VZ.641.17.0000.003-0001
NUCLEAR SAFETY RELATED USE
THIS IS A COMPUTER GENERATED DRAWING DO NOT REVISE IT MANUALLY
GPU NUCLEAR
REACTOR PROTECTION SYSTEM
ELECTRICAL ELEMENTARY DIAGRAM
CHANNEL 1
OYSTER CREEK
DWG. NO. GE 237E566
SH. 3
REV. 6
SCALE : NONE
W.A.NO.
STICK #7
7 | GE 886D338 | PANEL ER7
6 | GE 148F961 SH.2 | VARIABLE SPEED REDRC PUMP & MG SET ELDN
5 | GE 3E-811-17-009 SH. 1, 2 & 3 | ELEC. ELEMENTARY DIAGRAM CONTROL PANEL 3F ANNUN G
4 | GE 113C2338 | CONNECTION DIAGRAM PANEL 6XR
3 | GE 113C2265 | CONNECTION DIAGRAM PANEL 6R
2 | GE 113C2247 | CONNECTION DIAGRAM PANEL 4F
1 | GE 237E912 SH.8 | REACTOR MANUAL CONTROL SYSTEM ELEM.
NO. | DWG. NO. | TITLE
REFERENCES

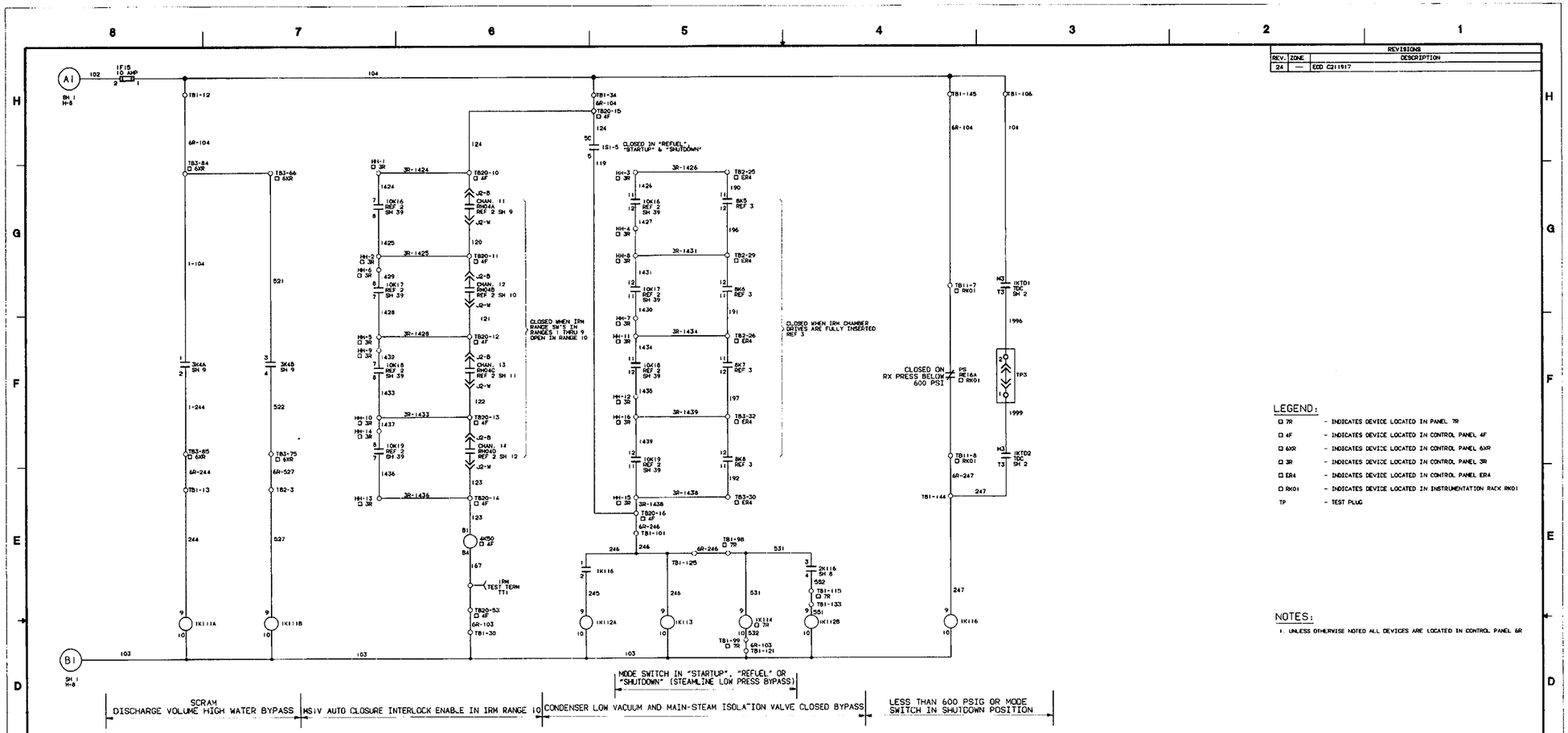

REVISIONS		
REV.	ZONE	DESCRIPTION
24	—	ECO C211917

LEGEND:

- □ 7R - INDICATES DEVICE LOCATED IN PANEL 7R
- □ 4F - INDICATES DEVICE LOCATED IN CONTROL PANEL 4F
- □ 6XR - INDICATES DEVICE LOCATED IN CONTROL PANEL 6XR
- □ 3R - INDICATES DEVICE LOCATED IN CONTROL PANEL 3R
- □ ER4 - INDICATES DEVICE LOCATED IN CONTROL PANEL ER4
- □ RK01 - INDICATES DEVICE LOCATED IN INSTRUMENTATION RACK RK01
- TP - TEST PLUG

NOTES:

1. UNLESS OTHERWISE NOTED ALL DEVICES ARE LOCATED IN CONTROL PANEL 6R

1S1 □ 4F
REACTOR MODE SWITCH (S81)

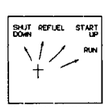

PISTOL GRIP HANDLE-KEY LOCKED TO ANY POSITION

CONTACTS HANDLE END		POSITIONS: RUN	INTER	START-UP	INTER	REFUEL	INTER	SHUTDOWN	FUNCTION	
	1	X	X	X	X	X			1K21A, B & C, RX MANUAL SCRAM (CHANNEL 1)	SH 2
	2	X	X	X	X	X			1K21A, B & C, RX MANUAL SCRAM (CHANNEL 1)	SH 2
	3	X							1K1, NMS TRIP CKT (CHANNEL 1)	SH 1
	4	X							1K2, NMS TRIP CKT (CHANNEL 1)	SH 1
	5			X	X	X	X	X	1K112A, 1K113-6R, 1K114 & 1K112B (CHANNEL 1)	THIS DWG.
	6							X	1KTD1, REMOVE SCRAM-IN (CHANNEL 1)	SH 2
	7							X	1KTD2, REMOVE SCRAM-IN (CHANNEL 1)	SH 2
	8	X	X							
	9	X	X						SRM HI HI & SRM HI/INOP ALARM BYPASS	REF 3
	10									
	11									
	12					X	X	X	3K4A & B DISCH. VOL. HI LEVEL BYPASS	SH 9
	13									
	14									
	15	X	X	X	X	X	X		REACTOR MANUAL CONTROL SYSTEM	REF 1 SH 1
	16	X	X	X	X	X	X		REACTOR MANUAL CONTROL SYSTEM	REF 1 SH 2
	17	X							REACTOR MANUAL CONTROL SYSTEM	REF 1 SH 2
	18			X	X	X	X		REACTOR MANUAL CONTROL SYSTEM	REF 1 SH 2
	19	X							NEUTRON MON. SYSTEM	REF 2 SH 39
	20			X	X	X	X	X	INTLK PERMISSIVE TO OPEN PENETRATION ISO. VLV.	SH 18
	21									
	22									
	23	X	X	X	X	X	X		2K21A, B & C, RX MANUAL SCRAM (CHANNEL 2)	SH 6
	24	X	X	X	X	X	X		2K21A, B & C, RX MANUAL SCRAM (CHANNEL 2)	SH 6
	25	X							2K1, NEUTRON MON. SYSTEM TRIP CKT (CHANNEL 2)	SH 5
	26	X							2K2, NEUTRON MON. SYSTEM TRIP CKT (CHANNEL 2)	SH 5
	27			X	X	X	X	X	2K112A, 2K113, 2K114 & 2K112B (CHANNEL 2)	SH 8
	28							X	2KTD1, REMOVE SCRAM-IN (CHANNEL 2)	SH 6
	29							X	2KTD2, REMOVE SCRAM-IN (CHANNEL 2)	SH 6
	30	X	X							
	31	X	X							
	32									

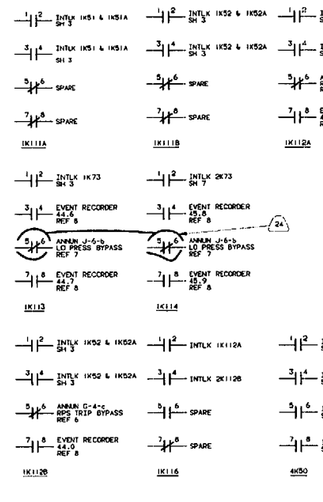

REFERENCES			
NO.	DWG. NO.	TITLE	
11	GE 112C2247	CONNECTION DIAGRAM PANEL 4F	
10	GE 112C2264	CONNECTION DIAGRAM PANEL 7R	
9	GE 112C2265	CONNECTION DIAGRAM PANEL 6R	
8	GE 886D301	ELEMENTARY DIAGRAM SELECTO INPUT TO PLANT COMPUTER	
7	GU 3E-611-17-011	ELEC ELEMENTARY DIAGRAM CONTROL PNL 6F/6F ANNUN. J	
6	GU 3E-611-17-009 SH1	ELEC ELEMENTARY DIAGRAM CONTROL PNL 3F ANNUN. G	
5	GE 112C2241	CONNECTION DIAGRAM PANEL ER4	
4	GE 112C2808 SH 3	CONNECTION DIAGRAM RK01	
3	GE 704E807	ELEMENTARY DIAGRAM SRM-IRM DRIVE CONTROL	
2	GE 704E812	NEUTRON MONITORING SYSTEM ELEMENTARY	
1	GE 237E912	ELEMENTARY DIAGRAM REACTOR MANUAL CONTROL SYSMTEM	

CADAM FILE NAME: V3E.641.17.0005.004-.2401
THIS IS A COMPUTER GENERATED DWG. DO NOT REVISE IT MANUALLY

REVISION 22 OF THIS DRAWING WAS REDRAWN FROM GE 237E566, SH. 2, REV. 27.

NUCLEAR SAFETY RELATED USE

GPU NUCLEAR

BRENNAN	10/07/97	
DRAWN	DATE	
CHECKED	DATE	
DESIGN LEADER	DATE	
ENGINEER	DATE	
MANAGER APPROVAL	DATE	

REACTOR PROTECTION SYSTEM
ELECTRICAL ELEMENTARY DIAGRAM
CHANNEL 1

OYSTER CREEK

DWG. NO.	SH.	REV.
GE 237E566	4	24

SCALE: NONE

ENG. MECH. | BA 328318 | V.D.

8T10K87

DWG-NO GE 237E566 SH. 4

REVISIONS		
REV	ZONE	DESCRIPTION
45		ECO C314612

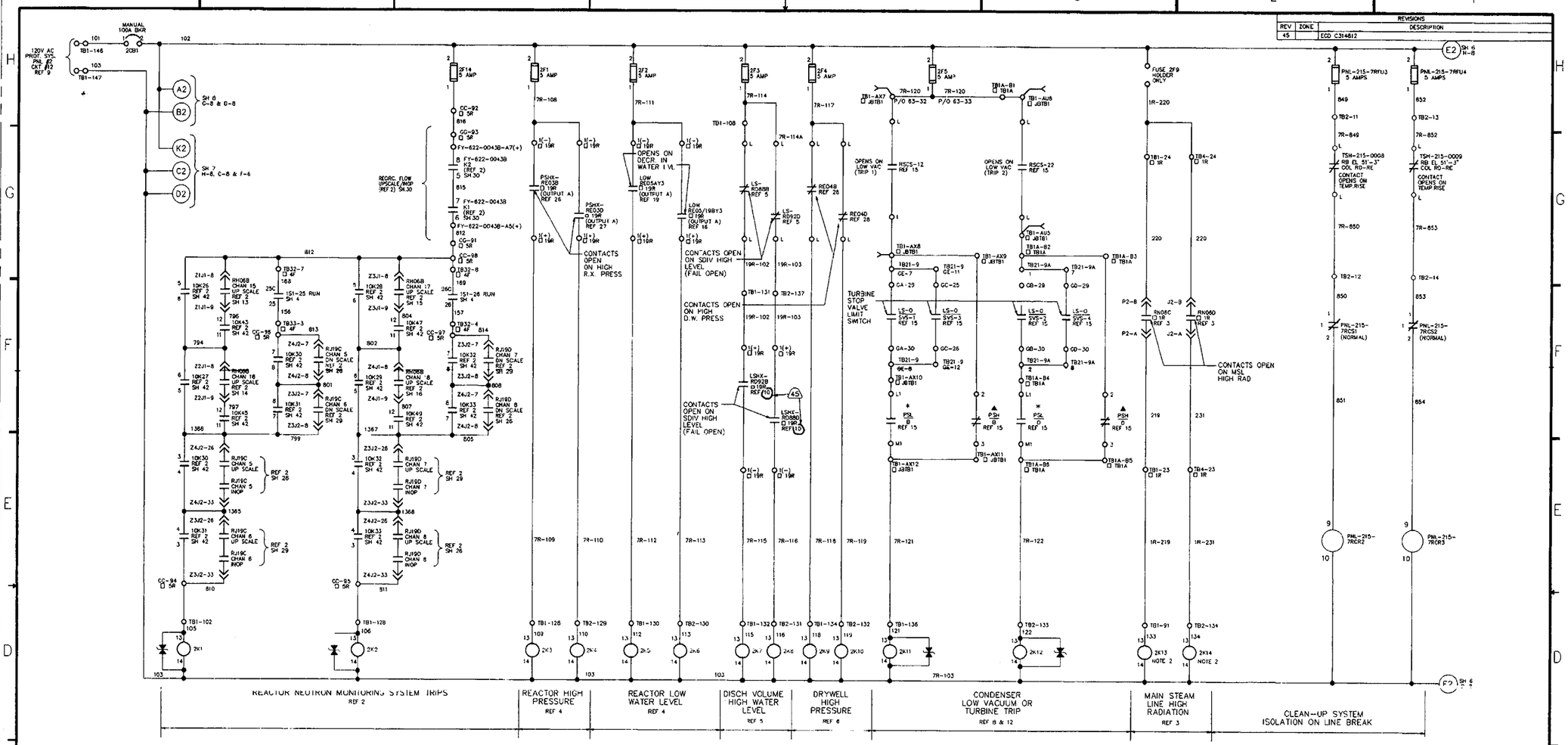

PNL-215-7RCS1

CONTACT	POSITION TEST	POSITION NORMAL	LOCATION
1			THIS DWG
2			NOT USED

MAINTAINED KEY OPERATED
KEY REMOVABLE IN NORMAL POSITION

PNL-215-7RCS2

CONTACT	POSITION TEST	POSITION NORMAL	LOCATION
1			THIS DWG
2			NOT USED

MAINTAINED KEY OPERATED
KEY REMOVABLE IN NORMAL POSITION

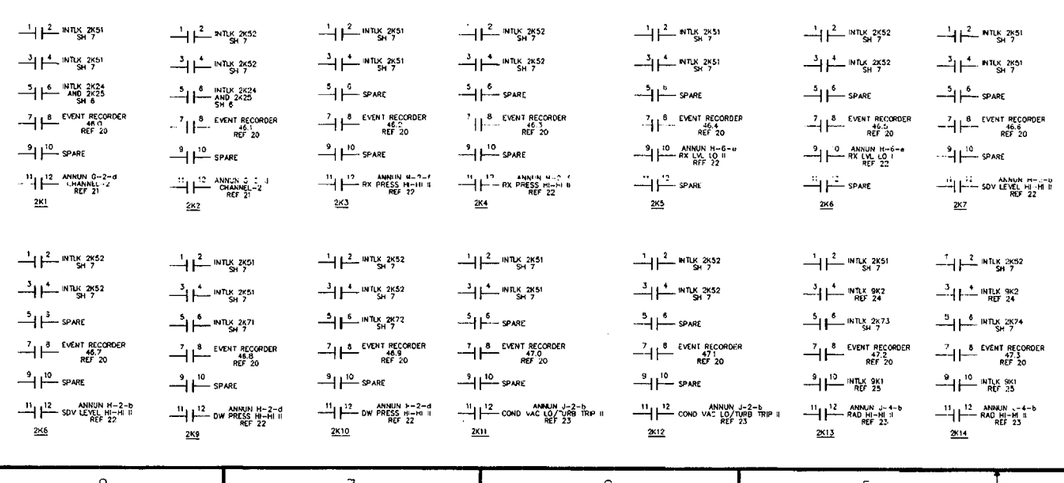

NO.	DWG. NO.	TITLE
30	GU 3E-611-17-006	ELEC ELEM DIAG CONTROL PANEL 3F-ANNUN D
29	GE 112C2264	CONNECTION DIAGRAM PANEL 7R
28	GE 112C2827 SH 2	RAOC (RX03, RECIRC PUMP REACTOR PROT. & NSS SYS
27	FO 86N-42654-CD-0005 & 0007	LOOP DIAG RE03C & RE03D PANEL 19R REAR
26	FO 86N-42654-CD-0001 & 0003	LOOP DIAG RE03A & RE03B PANEL 19R FRONT
25	BR 2713 SH 101	MISC ELEM & BLOCK DIAG VALVES V-7-29 & V-7-3 (E-E-15 & N-E-19)
24	GE 148F742	ELEM DIAG OFF GAS & STACK GAS MONITORS
23	GU 3E-611-17-011	ELEC ELEM DIAG CONTROL PANEL 3F/6F-ANNUN J
22	GU 3E-611-17-010	ELEC ELEM DIAG CONTROL PANEL 3F/6F-ANNUN H
21	GU 3E-611-17-009 SH 1	ELEC ELEM DIAG CONTROL PANEL 3F-ANNUN G
20	[illegible]	ELEM DIAG SELECTED INPUTS TO PLANT COMPUTER
19	FO 86N36864-A1-C001	LOOP DIAG RE05A PNL 19R FRONT
18	GE 112C2269	CONNECTION DIAGRAM PANEL 1R
17	GE 237E690	CONNECTION DIAGRAM PANEL 5R
16	GE 112C2241	CONNECTION DIAGRAM PANEL 4F
15	BR 3024	TURBINE CONTROL CONN DIAGRAM
14	BR 3025	TURBINE CONTROL CONN DIAGRAM
13	BR 3026	TURBINE CONTROL CONN DIAGRAM
12	GE 233R309 SH 1&2	TURBINE CONTROL DIAGRAM
11	GU 3E-862-18-1003	CONNECTION DIAGRAM PANEL 19R
10	FO 81N-46871-B1 (45) CONN	SCRAM DISCHARGE VOLUME PANEL 19R/REAR
9	GU 3C-733-11-011	PANEL GOLDSMLE PROTECTION SYS PANEL NO. 2 (PSP-2)
8	GE 108C5456 SH 2,3,6 & 10 (45)	G.E. TURBINE WIRING DIAGRAM
7	GE 237E798	REACTOR AND RECIRC LOOP P&ID
6	GE 237E726	DRYWELL & SUPPRESSION P&ID
5	GE 107E871	CRD HYDRAULIC SYSTEM P&ID
4	GE 148F712	REACTOR VESSEL LEVEL/PRESS/TEMP P&ID
3	GE 885D757	STEAM LINE RADIATION MONITOR ELEM
2	GE 706E812	NEUTRON MONITORING SYSTEM ELEM
1	GE 237E912	REACTOR MANUAL CONTROL SYSTEM ELEM

REFERENCES

LEGEND:

- * - INDICATES ACCELERATION RELAY OUTPUT PRESSURE SWITCH.
- ▲ - INDICATES THIRD STAGE TURBINE PRESSURE SWITCH.
- □ 1R - INDICATES DEVICE LOCATED IN CONTROL PANEL 1R.
- □ 5R - INDICATES DEVICE LOCATED IN CONTROL PANEL 5R.
- □ 4F - INDICATES DEVICE LOCATED IN CONTROL PANEL 4F.
- □ 19R - INDICATES DEVICE LOCATED IN CONTROL PANEL 19R.
- □ JBTB1- JUNCTION BOX TB1 AT TURBINE STANDARD.
- □ TB1A - TERMINAL BOX-1A.
- L - LOCAL TERMINAL.
- O-< - INDICATES BANANNA TEST JACK

NOTE:

1. UNLESS OTHERWISE NOTED ALL DEVICES ARE LOCATED IN CONTROL PANEL 7R
2. RELAYS 2K13 & 2K14 ABANDONED IN PLACE & CONTACT TERMINALS ENERGIZED.

CAD FILE NAME: GE 237E566 SS R45

REVISION 33 OF THIS DRAWING WAS REDRAWN FROM GE 237E566 SH 1A REV 37.
REVISION 38 OF THIS DRAWING WAS TRANSLATED TO AUTOCAD FROM CADAM FILE: V3E.641.17.0005.005-.3801

NUCLEAR SAFETY RELATED USE

THIS IS A COMPUTER GENERATED DRAWING DO NOT REVISE IT MANUALLY

GPU NUCLEAR

DRAWN: E BRENNAN 11/11/90
CHECKED: 2/8/2000
APPROVED: 2/8/00
SUPERVISOR: N/A
SCHEDULE MANAGER: N/A

REACTOR PROTECTION SYS
ELECTRICAL ELEMENTARY DIAGRAM
CHANNEL 2

OYSTER CREEK | DWG NO. GE 237E566 | SH. 5 | REV. 45
SCALE : NONE
BA | W.O.

DWG NO. GE 237E566 SH. 5

STICK#7

REVISIONS		
REV	ZONE	DESCRIPTION
36		ECO C306530

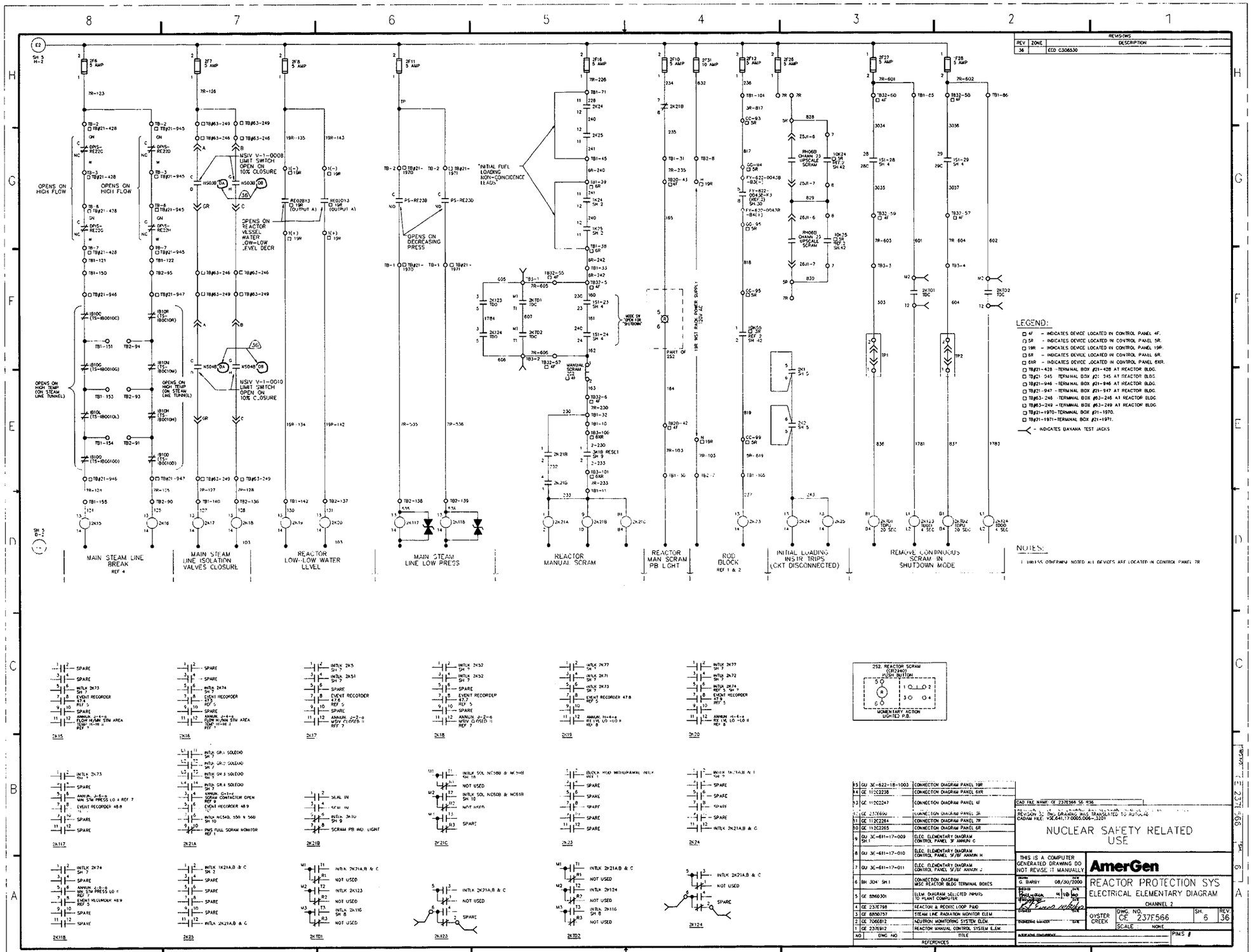

LEGEND:

- 4F - INDICATES DEVICE LOCATED IN CONTROL PANEL 4F.
- 5R - INDICATES DEVICE LOCATED IN CONTROL PANEL 5R.
- 19R - INDICATES DEVICE LOCATED IN CONTROL PANEL 19R.
- 6R - INDICATES DEVICE LOCATED IN CONTROL PANEL 6R.
- 6XR - INDICATES DEVICE LOCATED IN CONTROL PANEL 6XR.
- TB#21-428 - TERMINAL BOX #21-428 AT REACTOR BLDG.
- TB#21-945 - TERMINAL BOX #21-945 AT REACTOR BLDG.
- TB#21-946 - TERMINAL BOX #21-946 AT REACTOR BLDG.
- TB#21-947 - TERMINAL BOX #21-947 AT REACTOR BLDG.
- TB#63-246 - TERMINAL BOX #63-246 AT REACTOR BLDG.
- TB#63-249 - TERMINAL BOX #63-249 AT REACTOR BLDG.
- TB#21-1970 - TERMINAL BOX #21-1970.
- TB#21-1971 - TERMINAL BOX #21-1971.
- - INDICATES BANANA TEST JACKS

NOTES:

1. UNLESS OTHERWISE NOTED ALL DEVICES ARE LOCATED IN CONTROL PANEL 7R

NO	DWG NO	TITLE
15	GU 3E-622-18-1003	CONNECTION DIAGRAM PANEL 19R
14	GE 11C02238	CONNECTION DIAGRAM PANEL 6XR
13	GE 11C02247	CONNECTION DIAGRAM PANEL 4F
12	GE 237E690	CONNECTION DIAGRAM PANEL 5R
11	GE 11C02284	CONNECTION DIAGRAM PANEL 7R
10	GE 11C02265	CONNECTION DIAGRAM PANEL 6R
9	GU 3E-611-17-009 SH 1	ELEC. ELEMENTARY DIAGRAM CONTROL PANEL 9F ANNUN C
8	GU 3E-611-17-010	ELEC. ELEMENTARY DIAGRAM CONTROL PANEL 9F/8F ANNUN H
7	GU 3E-611-17-011	ELEC. ELEMENTARY DIAGRAM CONTROL PANEL 9F/8F ANNUN J
6	BH 304 SH 1	CONNECTION DIAGRAM MSC REACTOR BLDG TERMINAL BOXES
5	GE 8566301	ELEM. DIAGRAM SELECTED INPUTS TO PLANT COMPUTER
4	GE 237E798	REACTOR & RECIRC LOOP PUMP
3	GE 8850757	STEAM LINE RADIATION MONITOR ELEM
2	GE 7066812	NEUTRON MONITORING SYSTEM ELEM
1	GE 237E912	REACTOR MANUAL CONTROL SYSTEM E.E.M.

REFERENCES

CAD FILE NAME: GE 237E566 SE 436.
REVISION 32 THIS DRAWING WAS TRANSLATED TO AUTOCAD
CADAM FILE: V2E241.17.0005.006-13201

NUCLEAR SAFETY RELATED USE

THIS IS A COMPUTER GENERATED DRAWING DO NOT REVISE IT MANUALLY

DRAWN G. BARBY 08/30/2000

AmerGen

REACTOR PROTECTION SYS
ELECTRICAL ELEMENTARY DIAGRAM
CHANNEL 2

OYSTER CREEK | DWG. NO. GE 237E566 | SH. 6 | REV. 36
SCALE NONE
PIMS #

STICK #7

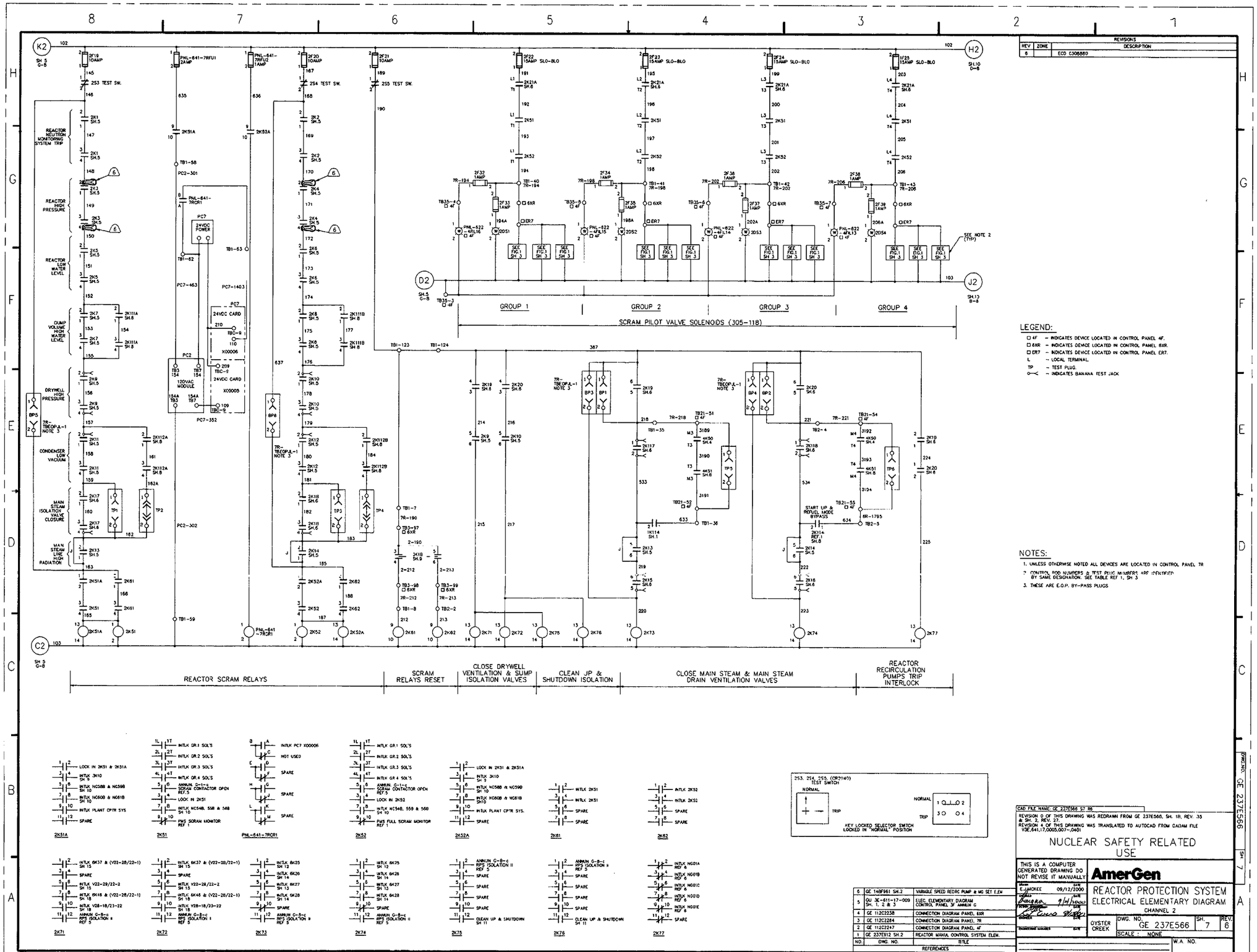

REV	ZONE	REVISIONS DESCRIPTION
6		ECD C306880

LEGEND:

- □ 4F – INDICATES DEVICE LOCATED IN CONTROL PANEL 4F.
- □ 6XR – INDICATES DEVICE LOCATED IN CONTROL PANEL 6XR.
- □ ER7 – INDICATES DEVICE LOCATED IN CONTROL PANEL ER7.
- L – LOCAL TERMINAL.
- TP – TEST PLUG.
- ○—< – INDICATES BANANA TEST JACK

NOTES:

1. UNLESS OTHERWISE NOTED ALL DEVICES ARE LOCATED IN CONTROL PANEL 7R
2. CONTROL ROD NUMBERS & TEST PLUG NUMBERS ARE IDENTIFIED BY SAME DESIGNATION. SEE TABLE REF 1, SH 3
3. THESE ARE E.O.P. BY-PASS PLUGS

NO.	DWG. NO.	TITLE
6	GE 148F961 SH.2	VARIABLE SPEED RECIRC PUMP & MG SET ELEM
5	GU 3E-611-17-009 SH. 1, 2 & 3	ELEC. ELEMENTARY DIAGRAM CONTROL PANEL 3F ANNUN G
4	GE 112C2238	CONNECTION DIAGRAM PANEL 6XR
3	GE 112C2284	CONNECTION DIAGRAM PANEL 7R
2	GE 112C2247	CONNECTION DIAGRAM PANEL 4F
1	GE 237E912 SH.2	REACTOR MANUL CONTROL SYSTEM ELEM.

REFERENCES

CAD FILE NAME: GE 237E566 S7 R6

REVISION 0 OF THIS DRAWING WAS REDRAWN FROM GE 237E566, SH. 1B, REV. 35 & SH. 2, REV. 27.
REVISION 4 OF THIS DRAWING WAS TRANSLATED TO AUTOCAD FROM CADAM FILE V3E,641,17,0005,007-,0401

NUCLEAR SAFETY RELATED USE

THIS IS A COMPUTER GENERATED DRAWING DO NOT REVISE IT MANUALLY

DRAWN E.J.MCKEE DATE 09/12/2000
CHECKED Bangra DATE 9/14/2000
DESIGN ENGINEER DATE
CHECKER DATE
ENGINEERING MANAGER DATE

AmerGen

REACTOR PROTECTION SYSTEM
ELECTRICAL ELEMENTARY DIAGRAM
CHANNEL 2

OYSTER CREEK | DWG. NO. GE 237E566 | SH. 7 | REV. 6
SCALE : NONE
W.A. NO.

STICK #7

DWG. NO. GE 237E566 SH. 7

REVISIONS		
REV.	ZONE	DESCRIPTION
2	—	ECO C211917

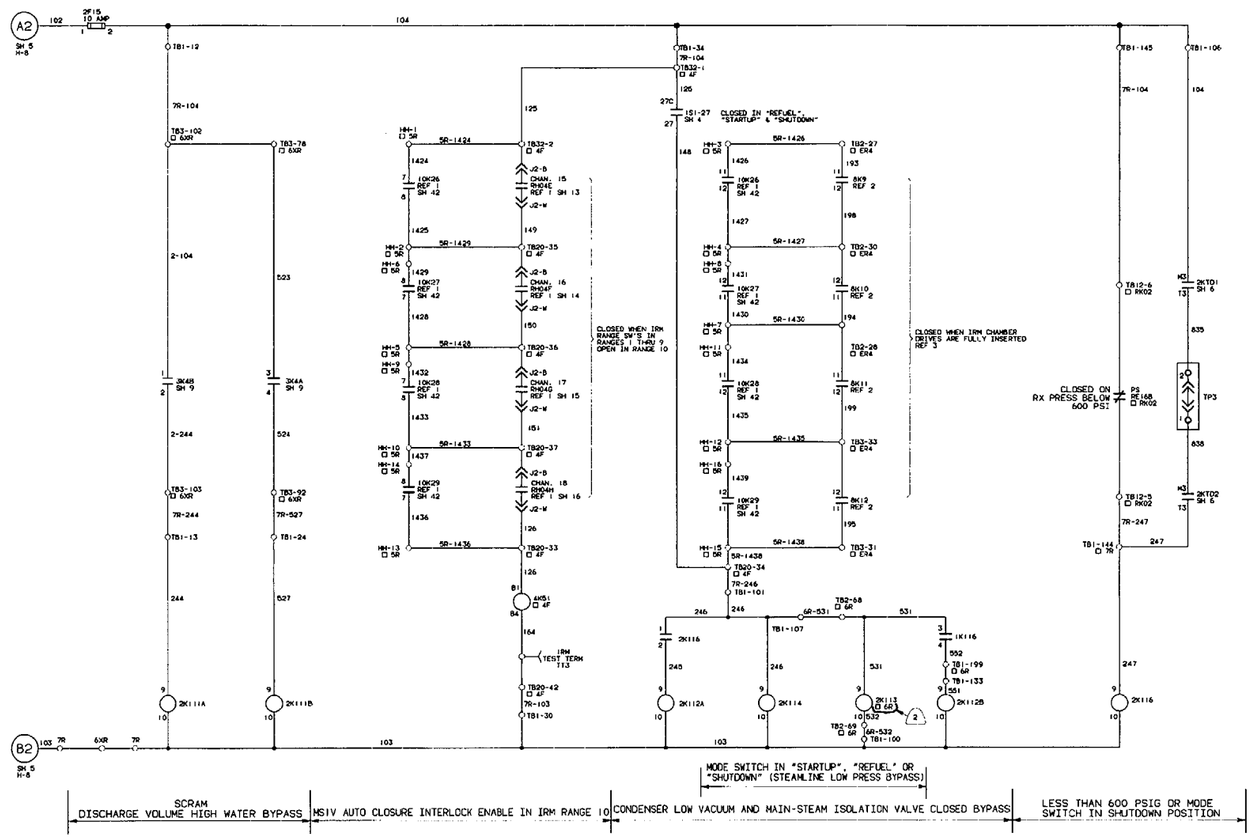

LEGEND:

□ 6R	- INDICATES DEVICE LOCATED IN PANEL 6R
□ 4F	- INDICATES DEVICE LOCATED IN CONTROL PANEL 4F
□ 6XR	- INDICATES DEVICE LOCATED IN CONTROL PANEL 6XR
□ 5R	- INDICATES DEVICE LOCATED IN CONTROL PANEL 5R
□ ER4	- INDICATES DEVICE LOCATED IN CONTROL PANEL ER4
□ RK02	- INDICATES DEVICE LOCATED IN INSTRUMENTATION RACK RK02
TP	- TEST PLUG RK02

NOTES:

1. UNLESS OTHERWISE NOTED ALL DEVICES ARE LOCATED IN CONTROL PANEL 7R

NO.	DWG. NO.	TITLE
10	GE 112C2247	CONNECTION DIAGRAM PANEL 4F
9	GE 112C2264	CONNECTION DIAGRAM PANEL 7R
8	GE 112C2265	CONNECTION DIAGRAM PANEL 6R
7	GE 886D361	ELEMENTARY DIAGRAM SELECTO INPUT TO PLANT COMPUTER
6	GU 3E-611-17-011	ELEC ELEMENTARY DIAGRAM CONTROL PNL 5F/6F ANNUN. J
5	GU 3E-611-17-009 SH1	ELEC ELEMENTARY DIAGRAM CONTROL PNL 3F ANNUN. G
4	GE 112C2241	CONNECTION DIAGRAM PANEL EN4
3	GE 112C2819	CONNECTION DIAGRAM RK02
2	GE 706E807	ELEMENTARY DIAGRAM SRM-IRM DRIVE CONTROL
1	GE 706E812	NEUTRON MONITORING SYSTEM ELEMENTARY

REFERENCES

CADAM FILE NAME: V3E.641.17.0005.008-.0201
THIS IS A COMPUTER GENERATED DWG. DO NOT REVISE IT MANUALLY

REVISION 0 OF THIS DRAWING WAS REDRAWN FROM GE 237E566, SH. 2, REV. 27.

NUCLEAR SAFETY RELATED
AS BUILT

DRAWN	BRENNAN	10/07/97
CHECKED		DATE
DESIGN LEADER		DATE
ENGINEER		DATE
MANAGER APPROVAL		DATE

GPU NUCLEAR

REACTOR PROTECTION SYSTEM
ELECTRICAL ELEMENTARY DIAGRAM
CHANNEL 2

OYSTER CREEK	DWG. NO. GE 237E566	SH. 8	REV. 2
	SCALE: NONE		
ENG.MECH.		BA 328318	W.O.

STICK #7

DWG-GE 237E566 SH. 8

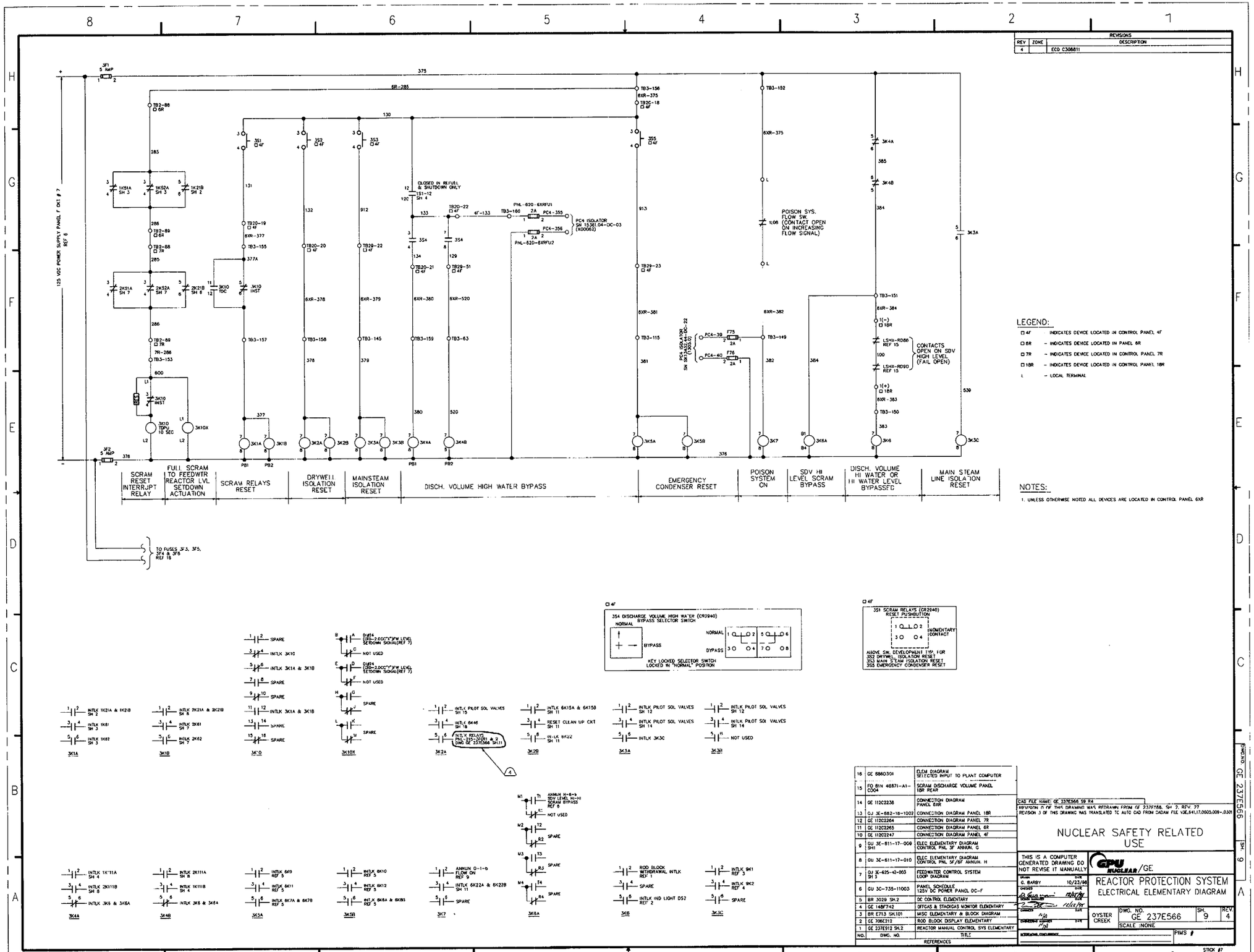

LEGEND:

- □ 4F – INDICATES DEVICE LOCATED IN CONTROL PANEL 4F
- □ 6R – INDICATES DEVICE LOCATED IN PANEL 6R
- □ 7R – INDICATES DEVICE LOCATED IN CONTROL PANEL 7R
- □ 18R – INDICATES DEVICE LOCATED IN CONTROL PANEL 18R
- L – LOCAL TERMINAL

NOTES:

1. UNLESS OTHERWISE NOTED ALL DEVICES ARE LOCATED IN CONTROL PANEL 6XR

REV	ZONE	DESCRIPTION
4		ECO C308811

NO.	DWG. NO.	TITLE
16	GE 8860301	ELEM DIAGRAM SELECTED INPUT TO PLANT COMPUTER
15	FO 81N 46871-A1-C004	SCRAM DISCHARGE VOLUME PANEL 18R REAR
14	GE 112C2238	CONNECTION DIAGRAM PANEL 6XR
13	GU 3E-882-18-1002	CONNECTION DIAGRAM PANEL 18R
12	GE 112C2264	CONNECTION DIAGRAM PANEL 7R
11	GE 112C2265	CONNECTION DIAGRAM PANEL 6R
10	GE 112C2247	CONNECTION DIAGRAM PANEL 4F
9	GU 3E-611-17-009 SH1	ELEC ELEMENTARY DIAGRAM CONTROL PNL 3F ANNUN. G
8	GU 3E-611-17-010	ELEC ELEMENTARY DIAGRAM CONTROL PNL 3F/6F ANNUN. H
7	GU 3E-625-42-003 SH 3	FEEDWATER CONTROL SYSTEM LOOP DIAGRAM
6	GU 3C-735-11003	PANEL SCHEDULE 125V DC POWER PANEL DC-F
5	BR 3029 SH.2	DC CONTROL ELEMENTARY
4	GE 148F742	OFFGAS & STACKGAS MONITOR ELEMENTARY
3	BR E713 SH.101	MISC ELEMENTARY & BLOCK DIAGRAM
2	GE 706E212	ROD BLOCK DISPLAY ELEMENTARY
1	GE 237E912 SH.2	REACTOR MANUAL CONTROL SYS ELEMENTARY

REFERENCES

CAD FILE NAME: GE 237E566 S9 R4
REVISION 0 OF THIS DRAWING WAS REDRAWN FROM GE 237E566, SH 2, REV. 27
REVISION 3 OF THIS DRAWING WAS TRANSLATED TO AUTO CAD FROM CADAM FILE V3E,641,17,0003,009-,0301

NUCLEAR SAFETY RELATED USE

THIS IS A COMPUTER GENERATED DRAWING DO NOT REVISE IT MANUALLY

DRAWN G. BARBY 10/23/96
CHECKED 12/25/96
DESIGN MANAGER 12/25/96
ENGINEER 12/25/96
CHARGEABLE MANAGER 12/25/96
SCREENING CONCURRENCE

GPU NUCLEAR/GE

REACTOR PROTECTION SYSTEM
ELECTRICAL ELEMENTARY DIAGRAM

OYSTER CREEK | DWG. NO. GE 237E566 | SH. 9 | REV. 4
SCALE :NONE
PIMS #

DWG.NO. GE 237E566 SH. 9

STICK #7

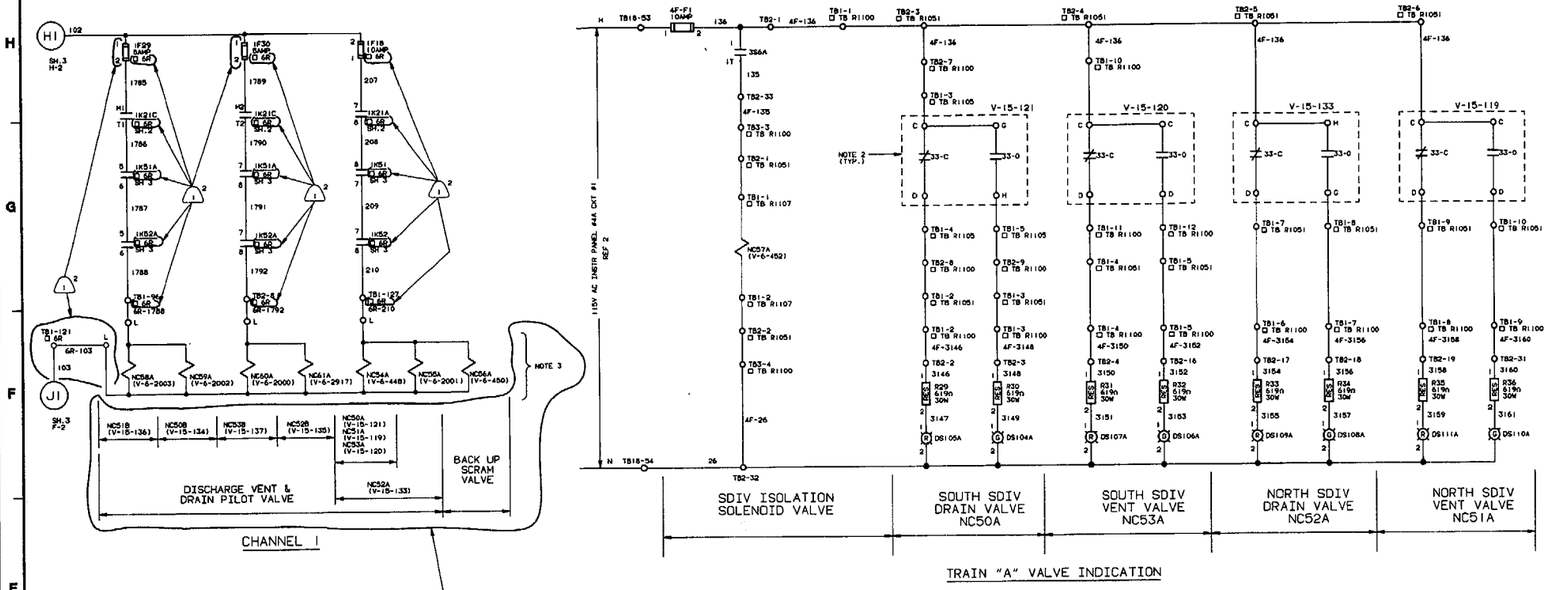

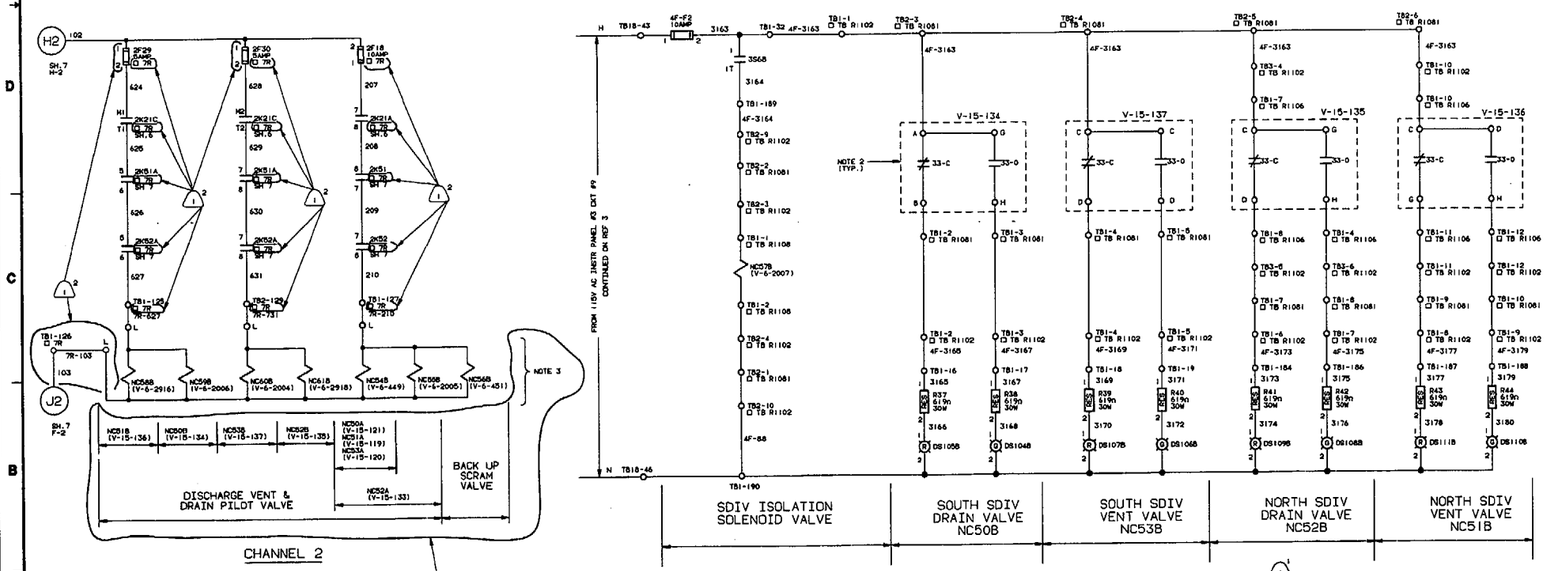

REVISIONS		
REV.	ZONE	DESCRIPTION
1		1. FCN C112801 2. FCN C119019

LEGEND:

TB R1100 - TERMINAL BOX # R1100
TB R1102 - TERMINAL BOX # R1102
TB R1105 - TERMINAL BOX # R1105
TB R1106 - TERMINAL BOX # R1106
TB R1107 - TERMINAL BOX # R1107
TB R1108 - TERMINAL BOX # R1108
TB R1051 - TERMINAL BOX # R1051
TB R1081 - TERMINAL BOX # R1081
33 - VALVE POSITION SWITCH
L - LOCAL TERMINAL
6R - INDICATES DEVICE LOCATED IN CONT PNL. 6R
7R - INDICATES DEVICE LOCATED IN CONT PNL. 7R

NOTES:

1. UNLESS OTHERWISE NOTED ALL DEVICES ARE LOCATED IN CONTROL ROOM PANEL 4F
2. VALVE LIMIT SWITCHES ARE SHOWN WITH THE VALVE IN THE FULL CLOSED POSITION.
3. ENERGIZE TO OPEN VALVES.

TYP LIMIT SWITCH CONTACT DEV			
LEGEND		VALVE POSITION	
		FULL OPEN	INTERMEDIATE	FULL CLOSED
OPEN LIMIT SWITCH	33-O			
	33-C			
CLOSE LIMIT SWITCH	33-C			
	33-O			

LIMIT SWITCH DEVELOPMENT DOES NOT SHOW THE ACTUAL NUMBER OF SWITCH CONTACTS SHOWN FOR CONTACT OPERATION ONLY!

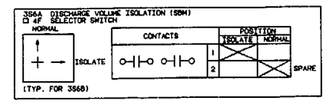

NO.	DWG. NO.	TITLE
8	BR 2013 SH. 6	CONTROL AIR SYS FLOW DIAGRAM
7	GE 112C2264	CONNECTION DIAGRAM PANEL 7R
6	GE 112C2265	CONNECTION DIAGRAM PANEL 6R
5	GU 3E-225-18-1000	WIRING DIAGRAM SCRAM DISCHARGE
4	GE 112C2247	CONNECTION DIAGRAM PANEL 4F
3	GE 237E912 SH 6	REACTOR MANUAL CONTROL ELEC ELEMENTARY DIAGRAM
2	GU 3C-733-11-007	PANEL SCHEDULE INSTRUMENT PANLE NO. 4A (IP-4A1)
1	GE 237E487 SH 1	FLOW DIAGRAM
		REFERENCES

CAD FILE: V3E.641.17.0005.010-.0101
THIS IS A COMPUTER GENERATED DWG. DO NOT REVISE IT MANUALLY

REVISION 0 OF THIS DRAWING WAS REDRAWN FROM GE 237E566. SH. 2. REV. 27.

NUCLEAR SAFETY RELATED (USE)

D.GURNANI 1/23/96	GPU Nuclear /GE	
DRAWN DATE	REACTOR PROTECTION SYSTEM ELECTRICAL ELEMENTARY DIAGRAM	
REVIEWED DATE		
DESIGN LEADER DATE		
ENGINEER DATE		
MANAGER APPROVAL DATE	OYSTER CREEK	DWG. NO. GE 237E566 SH. 10 REV. 1
		SCALE: NONE
DWG.MECH.		BA 328318 W.O.

GE 237E566 SH. 10

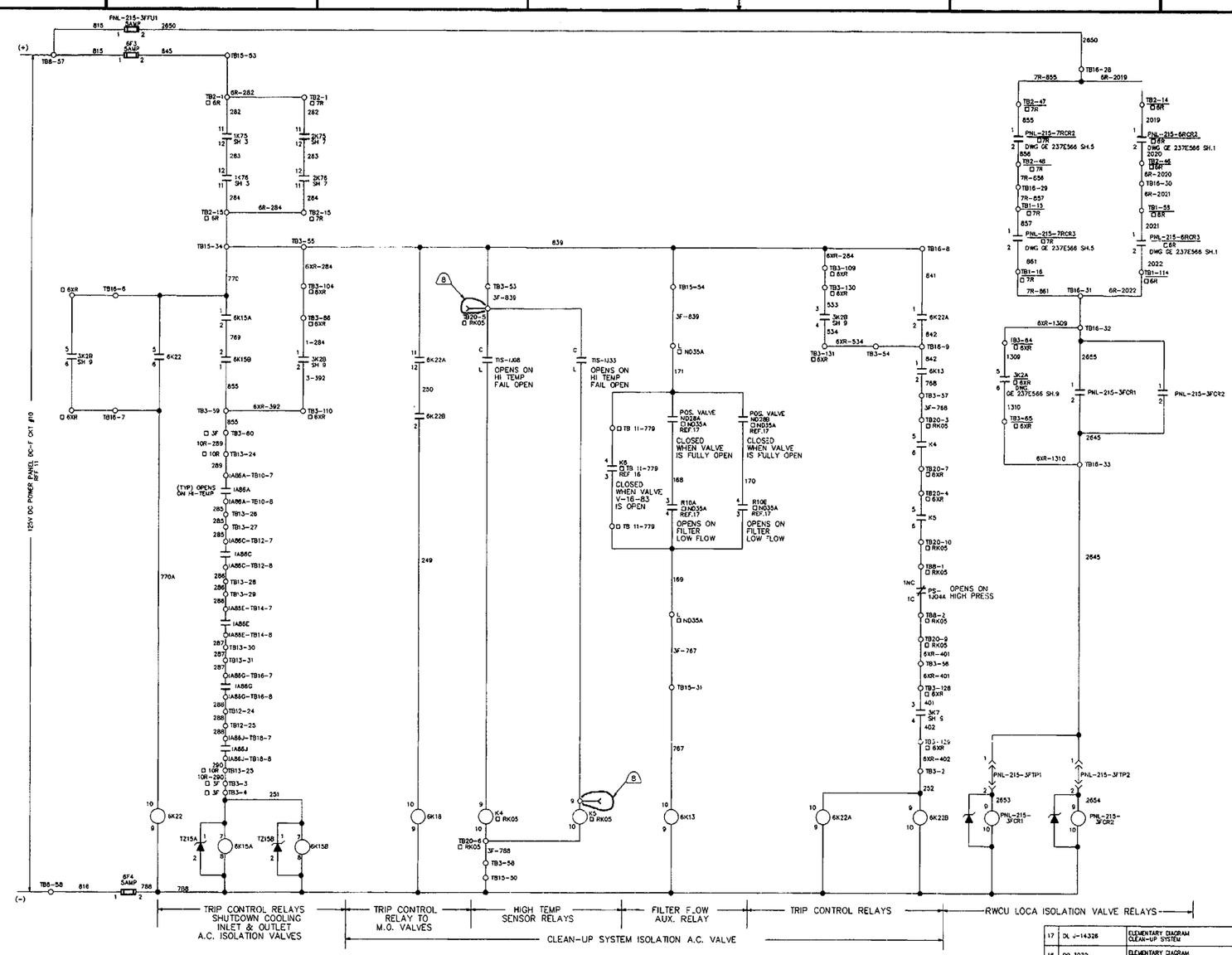

REVISIONS		
REV	ZONE	DESCRIPTION
8		ECO C308875

LEGEND:

- 6R – INDICATES DEVICE LOCATED IN PANEL 6R
- 7R – INDICATES DEVICE LOCATED IN PANEL 7R
- 6XR – INDICATES DEVICE LOCATED IN PANEL 6XR
- 10R – INDICATES DEVICE LOCATED IN PANEL 10R
- RK05 – INDICATES DEVICE LOCATED IN CONTROL RACK RK05 (CLEAN UP DEMIN. SYS.)
- ND35A – INDICATES DEVICE LOCATED IN PANEL ND35A
- TB 11-779 – INDICATES DEVICE LOCATED IN TB 11-779
- INDICATES BANANA TEST JACK.

NOTES:

1. UNLESS OTHERWISE NOTED ALL DEVICES ARE LOCATED IN CONTROL PANEL 3F.

K9: 1–2 ANNUN D-8-b NRMK OUTLET TEMP HI REF.5; 3–4 SPARE; 5–6 INTLK 6K22A & 6K22B; 7–8 SPARE

6K13: 1–2 INTLK 6K22A & 6K22B; 3–4 ANNUN D-7-c FILTER FLOW LO REF.3; 5–6 SPARE; 7–8 SPARE

6K15A: 1–2 SEAL IN 6K15A; 3–4 INTLK OPEN VALVE V-17-19 REF.2; 5–6 INTLK CLOSE VALVE V-17-19 REF.2; 9–10 SPARE; 11–12 INTLK CLOSE VALVE V-17-19 REF.2

6K15B: 1–2 SEAL IN 6K15B; 3–4 INTLK OPEN VALVE V-17-54 REF.3; 5–6 INTLK CLOSE VALVE V-17-54 REF.3; 9–10 SPARE; 11–12 INTLK CLOSE VALVE V-17-54 REF.3

6K18: 1–2 INTLK OPEN VALVE V-16-1 REF.4; 3–4 INTLK CLOSE VALVE V-16-1 REF.4; 5–6 INTLK CLOSE VALVE V-16-1 REF.4; 7–8 SPARE

PNL-215-3FCR1: 1–2 SEAL IN PNL-215-3FCR1 & 2 (THIS DWG); 3–4 INTLK CLOSE CKT V-16-1 REF.4; 5–6 INTLK OPEN CKT V-16-1 REF.4; 7–8 INTLK CLOSE CKT V-16-1 REF.4; 11–12 INTLK CLOSE VALVE V-16-14 REF.6; 13–14 INTLK CLOSE V-16-2 REF.7; 15–16 INTLK OPEN CKT V-16-1 REF.5; 17–18 SPARE

PNL-215-3FCR2: 1–2 SEAL-IN PNL-215-3FCR1 & 2 (THIS DWG); 3–4 INTLK CLOSE CKT V-16-1 REF.4; 5–6 INTLK OPEN CKT V-16-61 REF.1; 7–8 INTLK CLOSE CKT V-16-61 REF.1; 11–12 INTN CLOSE VALVE V-16-14 REF.6; 13–14 INTLK CLOSE V-16-2 REF.7; 15–16 INTLK OPEN CKT V-16-2 REF.5; 17–18 SPARE

6K22: 1–2 INTLK CLOSE VALVE V-16-61 REF.1; 3–4 INTLK OPEN VALVE V-16-61 REF.1; 5–6 SEAL IN 6K22; 7–8 INTLK CLOSE VALVE V-16-2 REF.7

6K22A: 1–2 SEAL IN (CLEANUP SYSTEM CKT); 3–4 INTLK OPEN VALVE V-16-14 REF.6; 5–6 INTLK CLOSE VALVE V-16-14 REF.6; 7–8 SPARE; 11–12 INTLK 6K18; 13–14 INTLK 6K23 (V-16-61) REF. 1

6K22B: 1–2 INTLK 6K18; 3–4 INTLK OPEN VALVE V-16-2 REF.7; 5–6 SPARE; 7–8 SPARE; 11–12 INTLK CLOSE VALVE V-16-2 REF.7; 13–14 SPARE

K4: 1–2 ANNUN D-8-c AUX PUMP CCW TEMP HI REF.5; 3–4 SPARE; 5–6 INTLK 6K22A & 6K22B; 7–8 SPARE

TYP LIMIT SWITCH CONTACT DEV				
LEGEND		VALVE POSITION		
		FULL OPEN	INTERMEDIATE	FULL CLOSED
OPEN LIMIT SWITCH	POS D 20-O			
	POS B 20-IC			
CLOSE LIMIT SWITCH	POS C 20-C			
	POS A 20-IO			

LIMIT SWITCH DEVELOPMENT DOES NOT SHOW THE ACTUAL NUMBER OF SWITCH CONTACTS (SHOWN FOR CONTACT OPERATION ONLY)

NO.	DWG. NO.	TITLE
17	DL J-14326	ELEMENTARY DIAGRAM CLEAN-UP SYSTEM
16	BR 3032	ELEMENTARY DIAGRAM REACTOR CONTROL
15	GE 112C3701	CONNECTION DIAGRAM PANEL 10R
14	GE 112C2238	CONNECTION DIAGRAM PANEL 6XR
13	GE 112C2264	CONNECTION DIAGRAM PANEL 7R
12	GE 112C2285	CONNECTION DIAGRAM PANEL 6R
11	GU 3C-735-11-003	PANEL SCHEDULE 125V DC POWER PANEL DC-F
10	GE 112C2356	RACK RK05-CLEAN UP DEMIN. SYS.
9	GE 112C2299	CONNECTION DIAGRAM PANEL 3F
8	DL-J-3070	CONNECTION DIAGRAM
7	BR E1183	ELEMENTARY DIAGRAM MOL-215-007 CLEANUP SYS ISOLATION VLV V-16-2
6	BR E1184	ELEMENTARY DIAGRAM MOL-215-007 CLEANUP SYS ISOLATION VLV V-16-14
5	GU 3E-611-17-008	ELEC. ELEMENTARY DIAGRAM CONTROL PANEL 3F ANNUN D
4	GE 15786350 SH 153A	ELEC. ELEMENTARY DIAGRAM MCC 1A82 UNIT 003
3	GE 15786350 SH 157B	ELEC. ELEMENTARY DIAGRAM MCC 1A82 UNIT C02
2	GE 15786350 SH 157A	ELEC. ELEMENTARY DIAGRAM MCC 1A82 UNIT C01
1	GE 15786350 SH 153B	ELEC. ELEMENTARY DIAGRAM MCC 1A82 UNIT B04

REFERENCES

CAD FILE NAME: GE 237E566 S11 R8

REVISION 0 OF THIS DRAWING WAS REDRAWN FROM GE 237E566, SH. 4, REV. 21.
REVISION 4 OF THIS DRAWING WAS TRANSLATED TO AUTOCAD FROM CADAM FILE V3E.841.17.0005.011-.0401

NUCLEAR SAFETY RELATED USE

THIS IS A COMPUTER GENERATED DRAWING DO NOT REVISE IT MANUALLY

DRAWN: G. BARBY 11/10/2000
DESIGN MANAGER: 12/4/00
CHECKED: 12/6/00
MANAGER: 12/6/00

AmerGen

REACTOR PROTECTION SYSTEM
ELEC. ELEMENTARY DIAGRAM

OYSTER CREEK | DWG. NO. GE 237E566 | SH 11 | REV. 8 | SCALE: NONE | BA | W.O.

DRAWING GE 237E566 SH 11

STOCK # 7

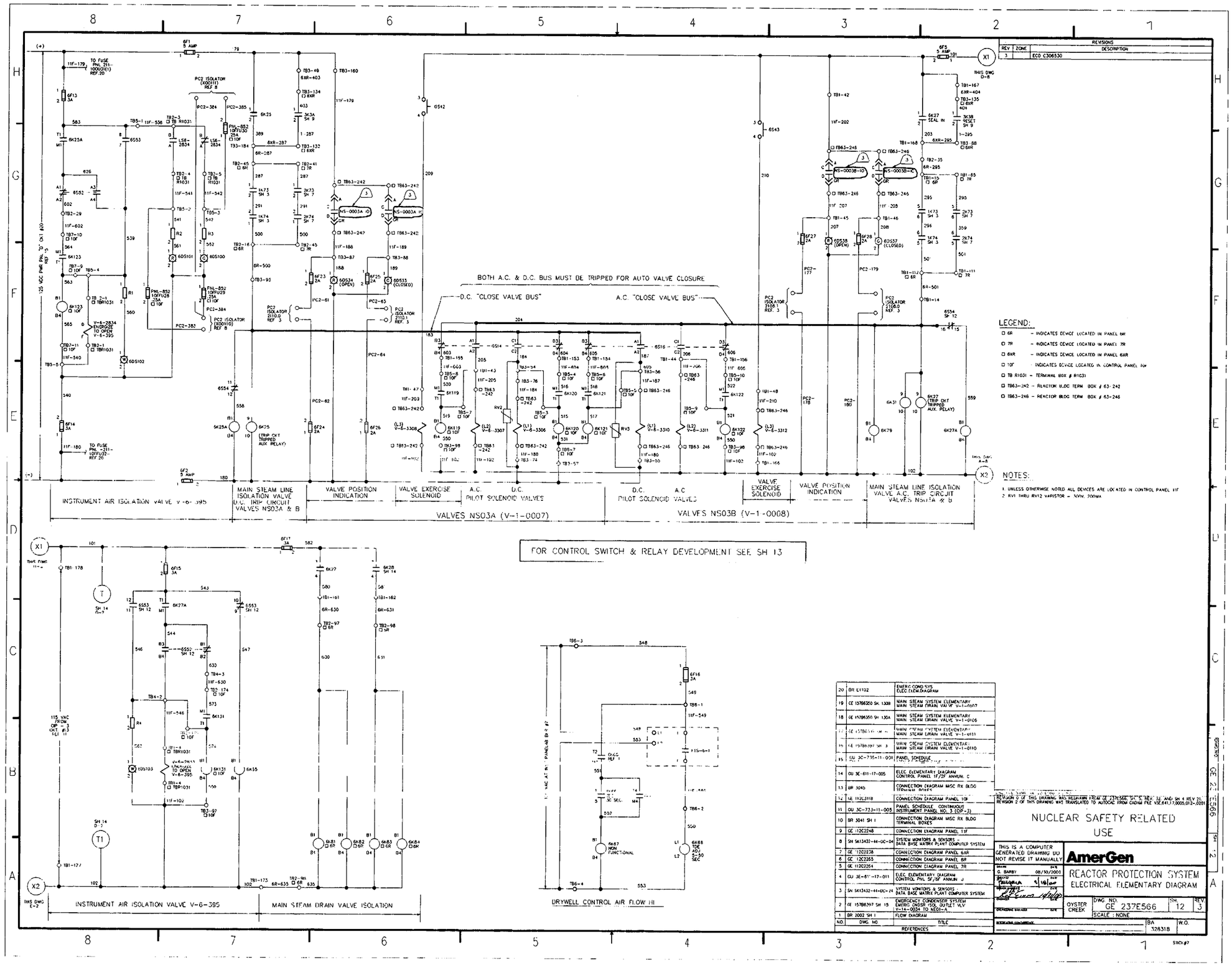

REVISIONS		
REV	ZONE	DESCRIPTION
3		ECO C306530

LEGEND:

- □ 6R – INDICATES DEVICE LOCATED IN PANEL 6R
- □ 7R – INDICATES DEVICE LOCATED IN PANEL 7R
- □ 6XR – INDICATES DEVICE LOCATED IN PANEL 6XR
- □ 10F – INDICATES DEVICE LOCATED IN CONTROL PANEL 10F
- □ TB R1031 – TERMINAL BOX # R1031
- □ TB63-242 – REACTOR BLDG TERM BOX # 63-242
- □ TB63-246 – REACTOR BLDG TERM BOX # 63-246

NOTES:

1. UNLESS OTHERWISE NOTED ALL DEVICES ARE LOCATED IN CONTROL PANEL 11F
2. RV1 THRU RV12 VARISTOR – 300V, 200MA

NO.	DWG. NO.	TITLE
20	BR E1102	EMERG.COND SYS ELEC.ELEM.DIAGRAM
19	GE 15786350 SH. 130B	MAIN STEAM SYSTEM ELEMENTARY MAIN STEAM DRAIN VALVE V-1-0107
18	GE 15786350 SH 130A	MAIN STEAM SYSTEM ELEMENTARY MAIN STEAM DRAIN VALVE V-1-0106
17	GE 15786397 SH 3	MAIN STEAM SYSTEM ELEMENTARY MAIN STEAM DRAIN VALVE V-1-0111
16	GE 15786397 SH 3	MAIN STEAM SYSTEM ELEMENTARY MAIN STEAM DRAIN VALVE V-1-0110
15	GU 3C-735-11-001	PANEL SCHEDULE
14	GU 3E-611-17-005	ELEC. ELEMENTARY DIAGRAM CONTROL PANEL 1F/2F ANNUN. C
13	BR 3045	CONNECTION DIAGRAM MISC RX BLDG TERMINAL BOXES
12	GE 112C3118	CONNECTION DIAGRAM PANEL 10F
11	GU 3C-733-11-005	PANEL SCHEDULE CONTINUOUS INSTRUMENT PANEL NO. 3 (CIP-3)
10	BR 3041 SH 1	CONNECTION DIAGRAM MISC RX BLDG TERMINAL BOXES
9	GE 112C2248	CONNECTION DIAGRAM PANEL 11F
8	SN SK13432-44-DC-04	SYSTEM MONITORS & SENSORS - DATA BASE MATRIX PLANT COMPUTER SYSTEM
7	GE 112C2238	CONNECTION DIAGRAM PANEL 6XR
6	GE 112C2265	CONNECTION DIAGRAM PANEL 6R
5	GE 112C2264	CONNECTION DIAGRAM PANEL 7R
4	GU 3E-611-17-011	ELEC. ELEMENTARY DIAGRAM CONTROL PNL 5F/6F ANNUN. J
3	SN SK13432-44-DC-24	SYSTEM MONITORS & SENSORS - DATA BASE MATRIX PLANT COMPUTER SYSTEM
2	GE 15786397 SH 15	EMERGENCY CONDENSER SYSTEM EMERG CNDSR ISOL OUTLET VLV V-14-0034 TO NEO1-A
1	BR 2002 SH 1	FLOW DIAGRAM

REFERENCES

REVISION 0 OF THIS DRAWING WAS REDRAWN FROM GE 237E566, SH. 5, REV. 32, AND SH. 4 REV 21. REVISION 2 OF THIS DRAWING WAS TRANSLATED TO AUTOCAD FROM CADAM FILE VOE.641.17.0005.012-0201

NUCLEAR SAFETY RELATED USE

THIS IS A COMPUTER GENERATED DRAWING DO NOT REVISE IT MANUALLY

DRAWN: G. BARBY DATE: 08/30/2000

AmerGen

REACTOR PROTECTION SYSTEM
ELECTRICAL ELEMENTARY DIAGRAM

OYSTER CREEK | DWG NO. GE 237E566 | SH. 12 | REV. 3
SCALE : NONE

BA 328318 | W.O.

GE 237E566 SH 12

STICK #7

REVISIONS		
REV.	ZONE	DESCRIPTION
1		ECO C206949

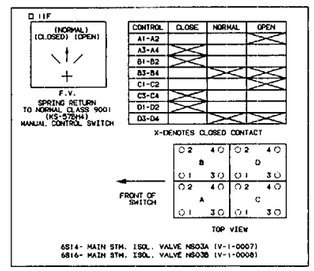

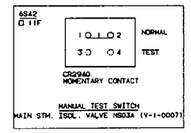

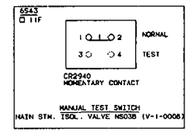

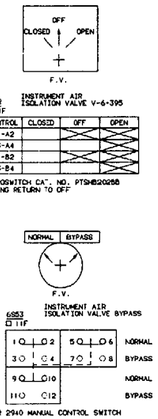

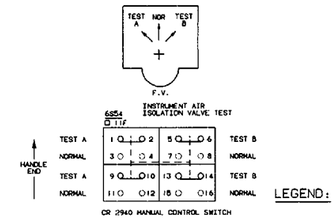

LEGEND:

TYP LIMIT SWITCH CONTACT DEV			
LEGEND		VALVE POSITION	
		FULL OPEN	INTERMEDIATE	FULL CLOSED
OPEN LIMIT SWITCH	POS D 20-D			
	POS B 20-IC			
CLOSE LIMIT SWITCH	POS C 20-C			
	POS A 20-IO			

LIMIT SWITCH DEVELOPMENT DOES NOT SHOW THE ACTUAL NUMBER OF SWITCH CONTACTS (SHOWN FOR CONTACT OPERATION ONLY)

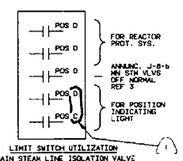

LIMIT SWITCH UTILIZATION
MAIN STEAM LINE ISOLATION VALVE
MS03A, MS03B, MS04A & MS04B
(V-1-0007, 0008, 0009,0010)

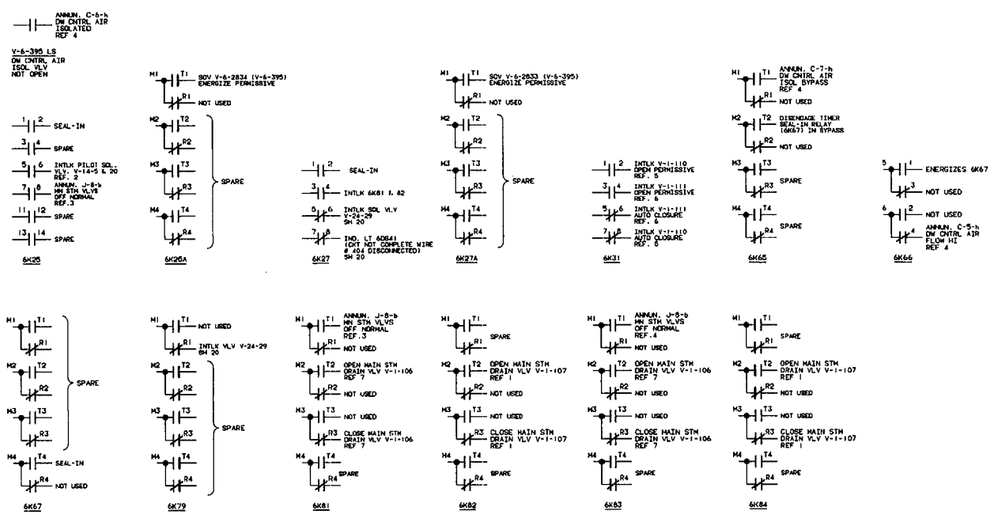

NOTES:

1. FOR RELAY COILS SEE SH 12.

NO.	DWG. NO.	TITLE
7	GE 15786350 SH. 13DA	MAIN STEAM SYSTEM ELEMENTARY MAIN STEAM DRAIN VALVE V-1-0106
6	GE 15786397 SH. 6	MAIN STEAM SYSTEM ELEMENTARY MAIN STEAM DRAIN VALVE V-1-0111
5	GE 15786397 SH. 3	MAIN STEAM SYSTEM ELEMENTARY MAIN STEAM DRAIN VALVE V-1-0110
4	GU 3E-611-17-005	ELEC ELEMENTARY DIAGRAM CONTROL PNL 1F/2F ANNUN. C
3	GU 3E-611-17-011	ELEC ELEMENTARY DIAGRAM CONTROL PNL 5F/6F ANNUN. J
2	GE 15786397 SH. 15	EMERGENCY CONDENSER SYSTEM EMERG CNDSR ISOL OUTLET VLV V-14-0034 TO NED1-A
1	GE 15786350 SH. 13DB	MAIN STEAM SYSTEM ELEMENTARY MAIN STEAM DRAIN VALVE V-1-0107

REFERENCES

CADAM FILE NAME: V3E.641.17.0005.013-.0101
THIS IS A COMPUTER GENERATED DWG. DO NOT REVISE IT MANUALLY

REVISION 0 OF THIS DRAWING WAS REDRAWN FROM GE 237E566 SH. 4, REV21.

NUCLEAR SAFETY RELATED USE

E.J.MCKEE	9/17/96	GPU Nuclear /GE
DRAWN	DATE	REACTOR PROTECTION SYSTEM
CHECKED	DATE	ELECTRICAL ELEMENTARY DIAGRAM
DESIGN LEADER	DATE	
ENGINEER	DATE	OYSTER CREEK
MANAGER APPROVAL	DATE	DWG. NO. GE 237E566 SH. 13 REV. 1
		SCALE: NONE
ENG.MECH.		BA 328318 W.O.

DWG.NO. GE 237E566 SH. 13

STICK67

REVISIONS		
REV	ZONE	DESCRIPTION
3		ECO C306530

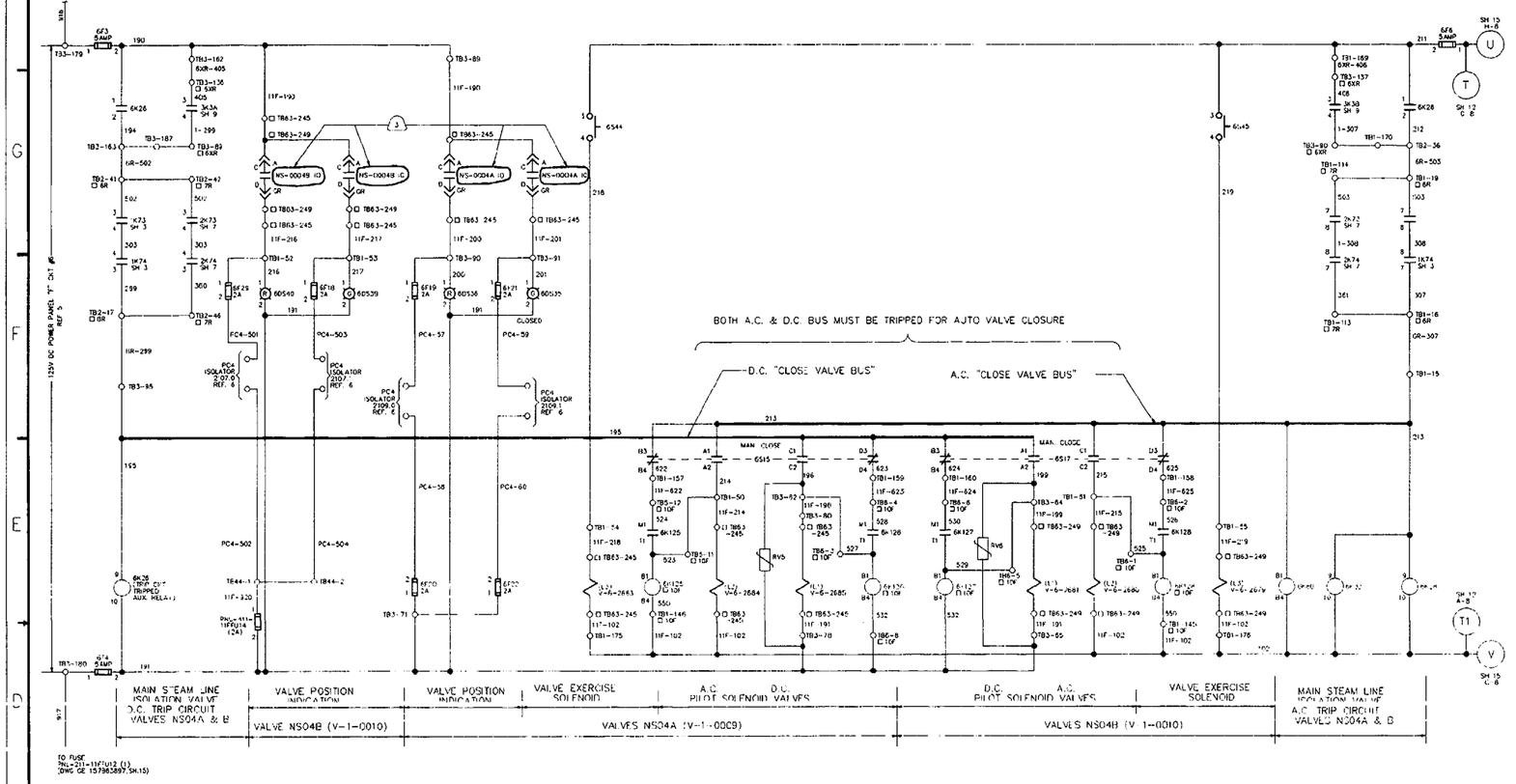

LEGEND:

- 6R - INDICATES DEVICE LOCATED IN PANEL 6R
- 7R - INDICATES DEVICE LOCATED IN PANEL 7R
- 6XR - INDICATES DEVICE LOCATED IN PANEL 6XR
- 10F - INDICATES DEVICE LOCATED IN CONTROL PANEL 10F
- TB63-245 - REACTOR BLDG TERMINAL BOX # 63-245
- TB63-249 - REACTOR BLDG TERMINAL BOX # 63-249

NOTES:

1. UNLESS OTHERWISE NOTED ALL DEVICES ARE LOCATED IN CONTROL PANEL 11F
2. RV1 THRU RV12 VARISTOR = 300V, 200MA

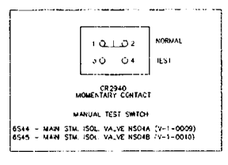

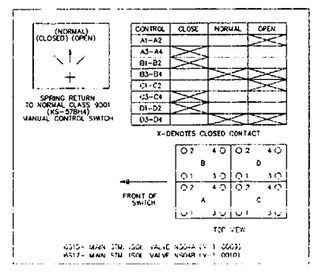

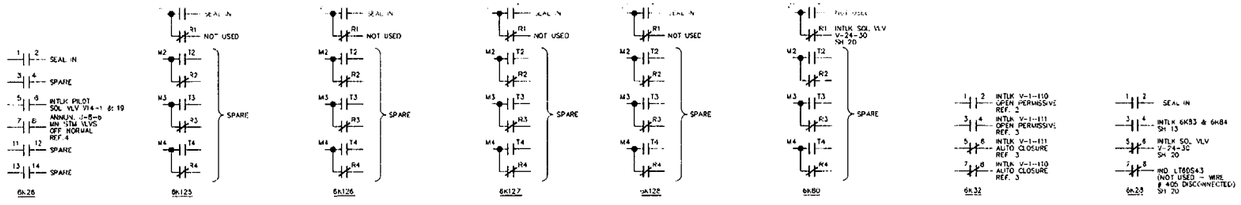

NO.	DWG. NO.	TITLE
11	GE 112C2248	CONNECTION DIAGRAM PANEL 11F
10	GE 112C3118	CONNECTION DIAGRAM PANEL 10F
9	GE 112C2238	CONNECTION DIAGRAM PANEL 6XR
8	GE 112C2235	CONNECTION DIAGRAM PANEL 6R
7	GE 112C2254	CONNECTION DIAGRAM PANEL 7R
6	SN 5913437-44-DC-24	SYSTEM MONITORS & SENSORS - DATA BASE MATRIX PLANT COMPUTER SYSTEM
5	CU 3G-735-11-003	PANEL SCHEDULE 125V DC POWER PANEL DC-7
4	CU 3E-611-17-011	ELEC ELEMENTARY DIAGRAM CONTROL PNL 5F/6F ANNUN. J
3	GE 157B6397 SH. 10	MAIN STEAM SYSTEM ELEMENTARY MAIN STEAM DRAIN VALVE V-1-011
2	GE 157B6397 SH. 3	MAIN STEAM SYSTEM ELEMENTARY MAIN STEAM DRAIN VALVE V-1-010
1	BR 2002 SH. 2	FLOW DIAGRAM

REFERENCES

CAD FILE NAME: GE 237E566 SH. R3

NUCLEAR SAFETY RELATED USE

THIS IS A COMPUTER GENERATED DRAWING DO NOT REVISE IT MANUALLY

AmerGen

REACTOR PROTECTION SYSTEM ELECTRICAL ELEMENTARY DIAGRAM

DRAWN: C. BARBY 09/13/2000

OYSTER CREEK

DWG. NO. GE 237E566 | SH. 14 | REV. 3

SCALE: NONE

BA 403005 | W.O.

STICK #7

REVISIONS		
REV.	ZONE	DESCRIPTION
5		C118753

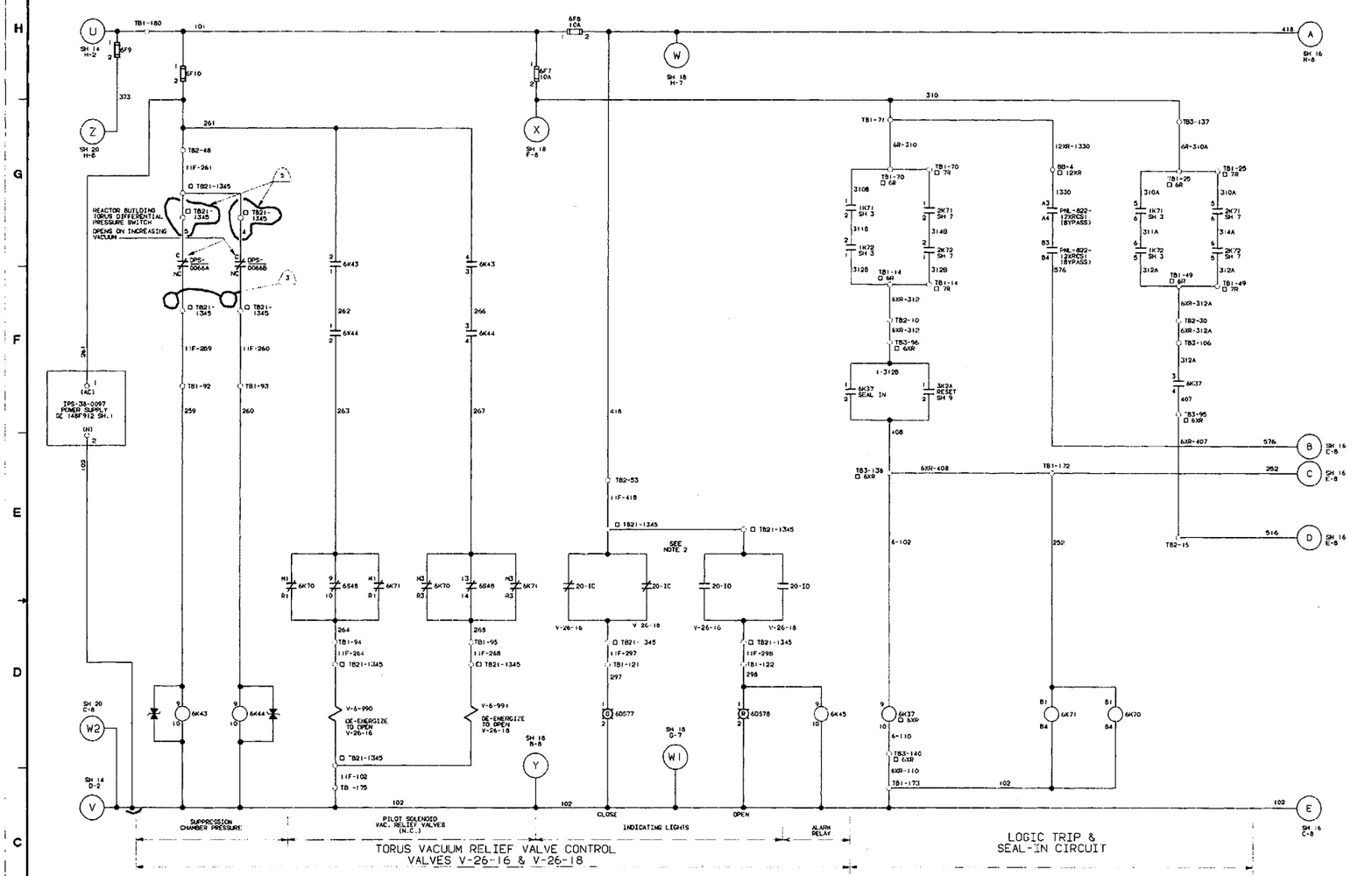

LEGEND:

- 6R - INDICATES DEVICE LOCATED IN PANEL 6R
- 6XR - INDICATES DEVICE LOCATED IN PANEL 6XR
- 7R - INDICATES DEVICE LOCATED IN PANEL 7R
- 10F - INDICATES DEVICE LOCATED IN CONTROL PANEL 10F
- 12XR - INDICATES DEVICE LOCATED IN PANEL 12XR
- TB21-1345 - REACTOR BLDG TERM BOX # 21-1345

NOTES:

1. UNLESS OTHERWISE NOTED ALL DEVICES ARE LOCATED IN CONTROL PANEL 11F
2. VALVES V-26-16 & V-26-18 ARE SHOWN IN THE NORMALLY CLOSED POSITION.

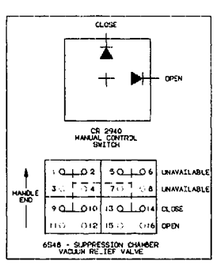

PNL-822-12XRCS1 ☐ 12XR

CONTACTS	NORMAL	BYPASS	LOCATION
A1-A2			SH 16
A3-A4			THIS DWG
B1-B2			REF 3
B3-B4			THIS DWG

2-POSITION MAINTAINED CONTACTS
KEYLOCK SWITCH SO "D" CO CA" #KS11K1H2
KEY REMOVABLE IN NORMAL POSITION ONLY

TYP LIMIT SWITCH CONTACT DEV

LEGEND		VALVE POSITION		
		FULL OPEN	INTERMEDIATE	FULL CLOSED
OPEN LIMIT SWITCH	POS D 20-D			
	POS B 20-IC			
CLOSE LIMIT SWITCH	POS C 20-C			
	POS A 20-ID			

LIMIT SWITCH DEVELOPMENT (DOES NOT SHOW THE ACTUAL NUMBER OF SWITCH CONTACTS (SHOWN FOR CONTACT OPERATION ONLY)

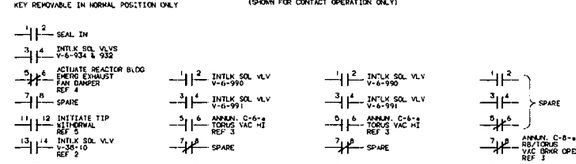

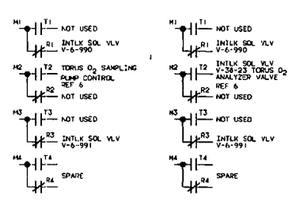

NO.	DWG. NO.	TITLE
8	BR 3041 SH.4	CONNECTION DIAGRAM DRYWELL & SUPP. SYS.
7	GE 112C0248	CONNECTION DIAGRAM PANEL 11F
6	BR E0280	TORUS O_2 SAMPLING PUMP VALVES ELEM
5	GE 237E697	TRAVERSING IN-CORE & CALIBRATION SYS ELEM
4	GU 3D-662-17-1002	STANDBY GAS TREATMENT SYS ELEM EXHAUST FANS EF-1-8 & EF-1-9 DAMPER CONTROL
3	GU 3E-611-17-005	ELEC ELEMENTARY DIAGRAM CONTROL PNL 1F/2F ANNUN. C
2	BR E0734	CONTAINMENT PARTICULATE MON SYS ELEM
1	BU 2E-243-21-1000 SH 1	FLOW DIAGRAM

REFERENCES

CAD FILE: V3E.641.17.0005.015-.2501
THIS IS A COMPUTER GENERATED DWG. DO NOT REVISE IT MANUALLY

REVISION 0 OF THIS DRAWING WAS REDRAWN FROM GE 237E566, SH. 6, REV. 24, AND SH 9 REV 32.

NUCLEAR SAFETY RELATED USE

J.GIDZINSKI 04/23/96

GPU Nuclear /GE

REACTOR PROTECTION SYSTEM
ELECTRICAL ELEMENTARY DIAGRAM

DRAWN / CHECKED / DESIGN LEADER / ENGINEER / MANAGER APPROVAL — DATE

OYSTER CREEK | DWG. NO. GE 237E566 | SH. 15 | REV. 5 | SCALE: NONE

ENG.MECH. | BA 328318 | W.O.

STICK #7

GE 237E566 SH. 15

REVISIONS		
REV.	ZONE	DESCRIPTION
1		FCN C096232

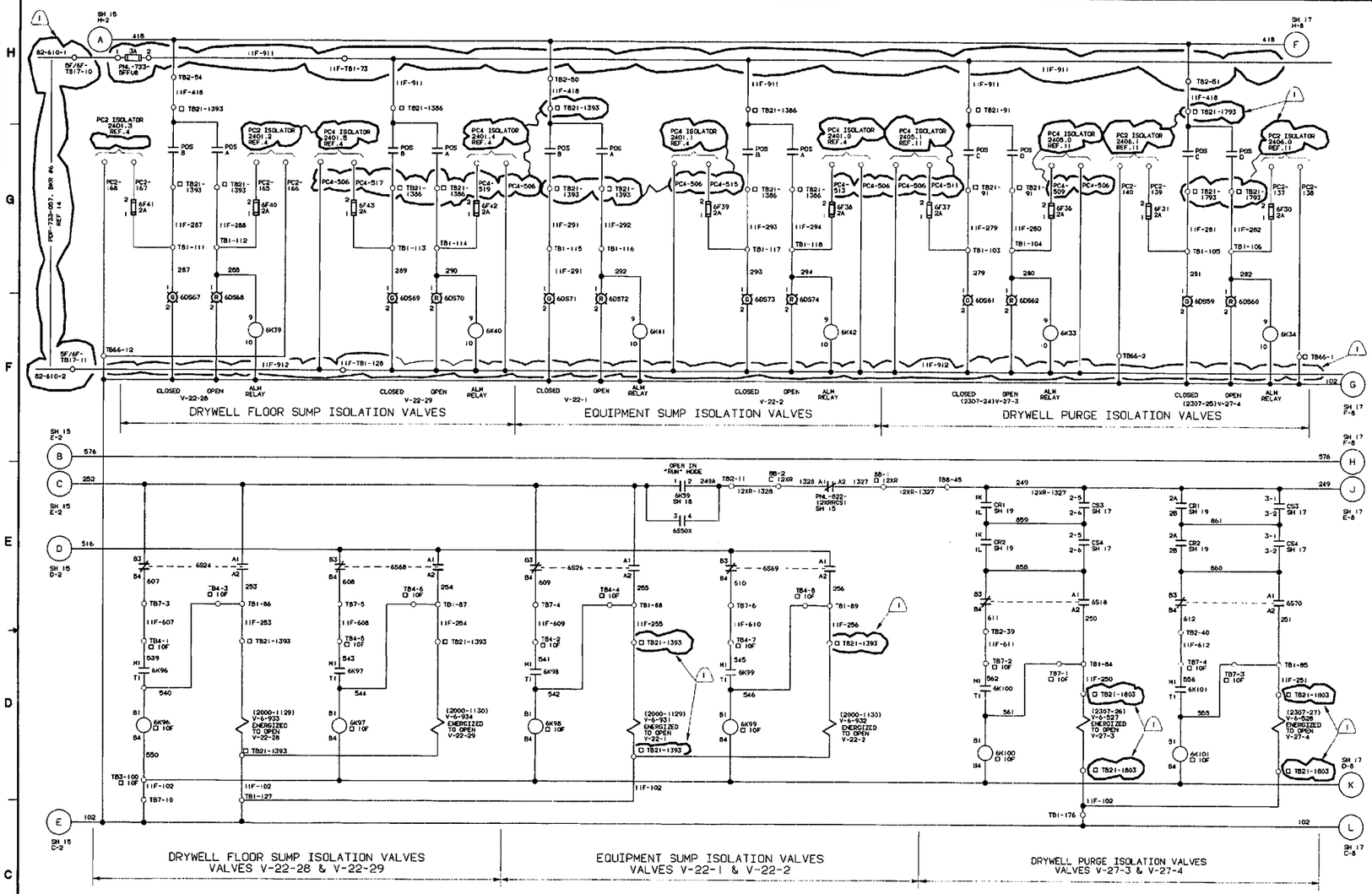

LEGEND:

- 12XR - INDICATES DEVICE LOCATED IN PANEL 12XR
- 10F - INDICATES DEVICE LOCATED IN CONTROL PANEL 10F
- TB21-1393 - REACTOR BLDG TERM BOX # 21-1393
- TB21-1386 - REACTOR BLDG TERM BOX # 21-1386
- TB21-91 - TERM BOX # 21-91
- TB21-1793 - TERM BOX # 21-1793
- TB21-1803 - TERM BOX # 21-1503

NOTES:

1. UNLESS OTHERWISE NOTED ALL DEVICES ARE LOCATED IN CONTROL PANEL 11F

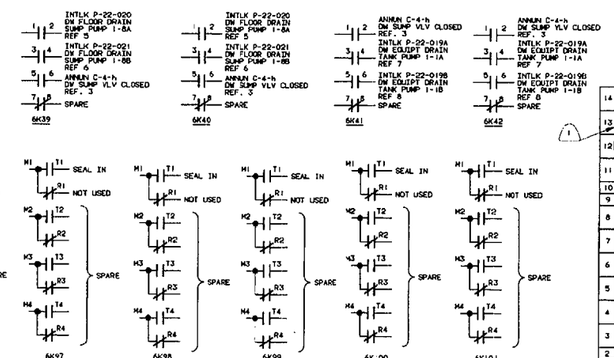

TYP LIMIT SWITCH CONTACT DEV

LEGEND		VALVE POSITION		
		FULL OPEN	INTERMEDIATE	FULL CLOSED
OPEN LIMIT SWITCH	POS D	20-O		
	POS B	20-IC		
CLOSE LIMIT SWITCH	POS C	20-C		
	POS A	20-IO		

LIMIT SWITCH DEVELOPMENT DOES NOT SHOW THE ACTUAL NUMBER OF SWITCH CONTACTS (SHOWN FOR CONTACT OPERATION ONLY)

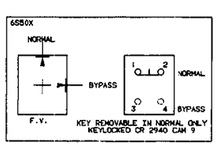

SPRING RETURN TO NORMAL
SQUARE D CAT. NO KD-5T2RG
MANUAL VALVE CONTROL SWITCH

CONTROL	CLOSE	NORMAL	OPEN
A1-A2			
A3-A4			
B1-B2			
B3-B4			

X-DENOTES CLOSED CONTACT

SWITCH	VALVE
6518	V-27-3
6524	V-22-28
6526	V-22-1
6568	V-22-29
6569	V-22-2
6570	V-27-4

NO.	DWG. NO.	TITLE
14	GU 3C-733-11-013	120V AC VITAL POWER SYSTEM PANEL PDP-733-057
13	BR 3041.SH.4	ELECTRICAL CONN. DIAG.
12	BR 3041.SH.2	ELECTRICAL CONNECTION DIAGRAM
11	SN SK13432-44-DC-26	SYSTEM MONITORS SENSORS -DATA BASE MATRIX PLANT COMPUTER SYS
10	GE 112C3115	CONNECTION DIAGRAM PANEL 10F
9	GE 719E276	CONNECTION DIAGRAM PANEL 12XR
8	GE 15786350 SH 590	DRYWELL FLR & EQUIPT DRAIN ELEM DRYWELL FLR DRN SUMP PUMP 1-1B. P-22-019B
7	GE 15786350 SH 590	DRYWELL FLR & EQUIPT DRAIN ELEM DRYWELL FLR DRN SUMP PUMP 1-1A. P-22-019A
6	GE 15786350 SH 598	DRYWELL FLR & EQUIPT DRAIN ELEM DRYWELL FLR DRN SUMP PUMP 1-8B. P-22-021
5	GE 15786350 SH 598	DRYWELL FLR & EQUIPT DRAIN ELEM DRYWELL FLR DRN SUMP PUMP 1-8A. P-22-020
4	SN SK13432-44-DC-25	SYSTEM MONITORS & SENSORS - DATA BASE MATRIX PLANT COMPUTER SYSTEM
3	GU 3E-611-17-005	ELEC ELEMENTARY DIAGRAM CONTROL PNL 1F/2F ANNUN. C
2	GE 112C2248	CONNECTION DIAGRAM PANEL 11F
1	JC 14734 SH 3 & 2 BR 2011 SH 2	FLOW DIAGRAM

REFERENCES

CAD FILE: VSE.641.17.0005.016-.0101
THIS IS A COMPUTER GENERATED DWG. DO NOT REVISE IT MANUALLY

REVISION 0 OF THIS DRAWING WAS REDRAWN FROM GE 237E566, SH.6, REV.24

NUCLEAR SAFETY RELATED USE

DRAWN: M. ROSS	DATE 11/29/94	GPU Nuclear/GE
CHECKED:	DATE 12/1/94	REACTOR PROTECTION SYSTEM ELECTRICAL ELEMENTARY DIAGRAM
DESIGN LEADER	DATE 12/6/94	
ENGINEER	DATE	OYSTER CREEK — DWG. NO. GE 237E566 — SH. 16 — REV. 1
MANAGER APPROVAL	DATE	SCALE: NONE
ENG.MECH.		BA 403005 — TASK

DWG NO. GE 237E566 SH. 16

REVISIONS		
REV.	ZONE	DESCRIPTION
1		FCN C09823L

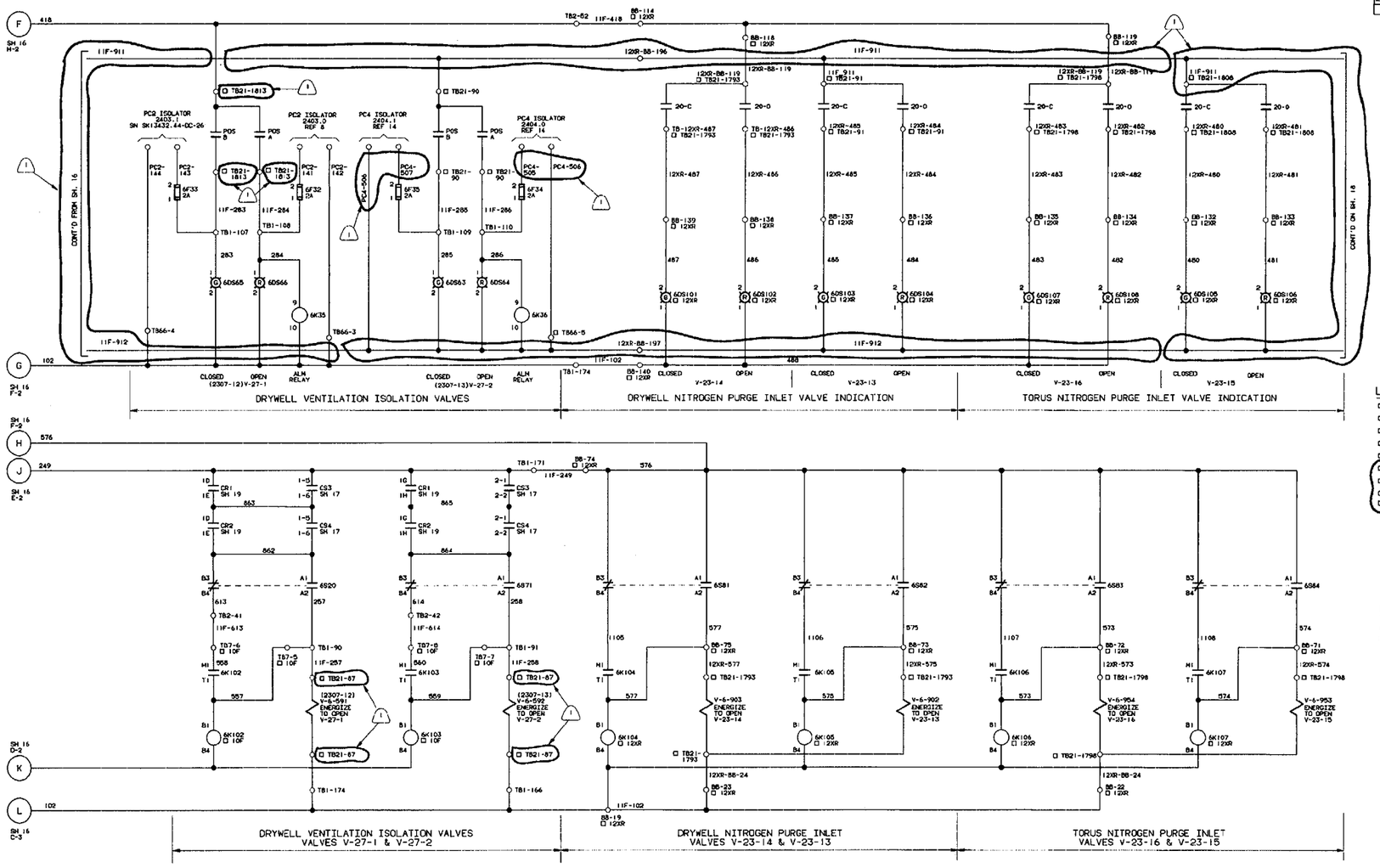

LEGEND:

- □ 12XR - INDICATES DEVICE LOCATED IN PANEL 12XR
- □ 10F - INDICATES DEVICE LOCATED IN CONTROL PANEL 10F
- □ TB21-90 - TERMINAL BOX # 21-90
- □ TB21-1793 - TERMINAL BOX # 21-1793
- □ TB21-1798 - TERMINAL BOX # 21-1798
- □ TB21-1813 - TERMINAL BOX # 21-1813
- □ TB21-1806 - TERMINAL BOX # 21-1806
- □ TB21-87 - TERMINAL BOX # 21-87
- □ TB21-91 - TERMINAL BOX # 21-91

NOTES:

1. UNLESS OTHERWISE NOTED ALL DEVICES ARE LOCATED IN CONTROL PANEL 11F
2. CONTROL SWITCHES CS3 AND CS4 ARE PREFIXED BY PNL. 622-11F.

TYP LIMIT SWITCH CONTACT DEV				
LEGEND		VALVE POSITION		
		FULL OPEN	INTERMEDIATE	FULL CLOSED
OPEN LIMIT SWITCH	POS D 20-0			
	POS B 20-1C			
CLOSE LIMIT SWITCH	POS C 20-C			
	POS A 20-1O			

LIMIT SWITCH DEVELOPMENT DOES NOT SHOW THE ACTUAL NUMBER OF SWITCH CONTACTS (SHOWN FOR CONTACT OPERATION ONLY)

NORM. BYP.

BLOCK	CONTACT NUMBERS	NORMAL	BYPASS	USE FOR:
1 O__O 2	1-2		X	SPARE
5 O__O 6	5-6		X	V-27-1
1 O__O 2	1-2		X	V-27-2
5 O__O 6	5-6		X	V-27-3
1 O__O 2	1-2		X	V-27-4
5 O__O 6	5-6		X	V-28-17
1 O__O 2	1-2		X	V-28-18
5 O__O 6	5-6		X	SPARE

CS3 (CS4 IDENTICAL) MAINTAINED CONTACTS. TWO POSITION MICROSWITCH CAT. NO. PTS-B-C2-02-GF. SEE NOTE 2

(NORMAL) (CLOSE) (OPEN) F.V.

CONTACT	CLOSE	NORMAL	OPEN
A1-A2			X
A3-A4	X		
B1-B2	X		
B3-B4		X	X

X-DENOTES CONTACT CLOSED
SPRING RETURN TO NORMAL SQUARED CAT. NO KS57BH2
MANUAL VALVE CONTROL SWITCH

SWITCH	VALVE
6S20	V-27-1
6S71	V-27-2
6S81	V-23-14
6S82	V-23-13
6S83	V-23-16
6S84	V-23-15

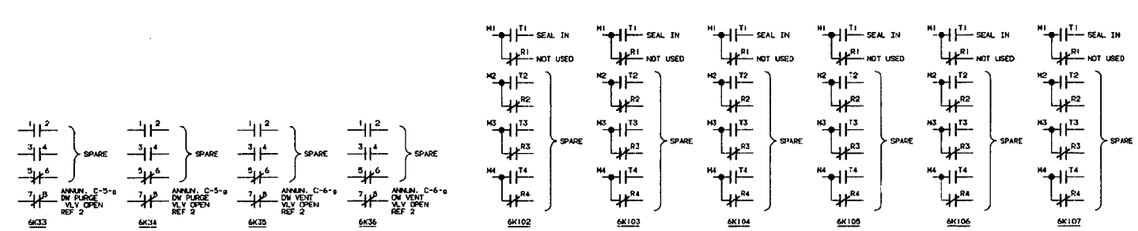

NO.	DWG. NO.	TITLE
10	SN SK13432.44-DC-26	SYSTEM MONITORS AND SENSORS DATA BASE MATRIX PLANT COMPUTER SYS
9	GE 719E276 SH 2,2A,3	CONNECTION DIAGRAM - PANEL 12XR
8	SN SK13432.44-DC-25	SYSTEM MONITORS AND SENSORS DATA BASE MATRIX PLANT COMPUTER SYS
7	GE 112C2248	CONNECTION DIAGRAM PANEL 11F
6	GE 112C3118	CONNECTION DIAGRAM PANEL 10F
5	GE 719E276	CONNECTION DIAGRAM PANEL 12XR
4	BR 3041	RB VENTILATION SYS CONNECTION DIAG MISC REACTOR BLDG TERMINAL BOXES
3	BR 3044 SH 1	MISC. CONNECTION DIAGRAM
2	GU 3E-611-17-005	ELEC ELEMENTARY DIAGRAM CONTROL PNL 1F/2F ANNUN. C
1	BR 2011 SH 3 SN 13432.19-1 SH. 1	FLOW DIAGRAM

REFERENCES

CAD FILE: V3E.641.17.0005.017-.0101
THIS IS A COMPUTER GENERATED DWG. DO NOT REVISE IT MANUALLY

REVISION 0 OF THIS DRAWING REDRAWN FROM GE 237E566. SH.6. REV.24

NUCLEAR SAFETY RELATED
USE

BRENNAN	10/6/94	DATE
DRAWN		DATE
CHECKED	12/1/94	DATE
DESIGN LEADER	12/8/94	DATE
ENGINEER		DATE
MANAGER APPROVAL	12-13-94	DATE

GPU Nuclear /GE

REACTOR PROTECTION SYSTEM ELECTRICAL ELEMENTARY DIAGRAM

OYSTER CREEK	DWG. NO. GE 237E566	SH. 17	REV. 1
	SCALE: NONE		

ENG.MECH. | BA 403005 | TASK

DWG.NO. GE 237E566 SH. 17

REVISIONS		
REV	ZONE	DESCRIPTION
2		ECO C306744

TYP LIMIT SWITCH CONTACT DEV					
LEGEND			VALVE POSITION		
			FULL OPEN	INTERMEDIATE	FULL CLOSED
OPEN LIMIT SWITCH	POS D	20-D			
	POS B	20-3C			
CLOSE LIMIT SWITCH	POS C	20-C			
	POS A	20-10			

LIMIT SWITCH DEVELOPMENT DOES NOT SHOW THE ACTUAL NUMBER OF SWITCH CONTACTS (SHOWN FOR CONTACT OPERATION ONLY)

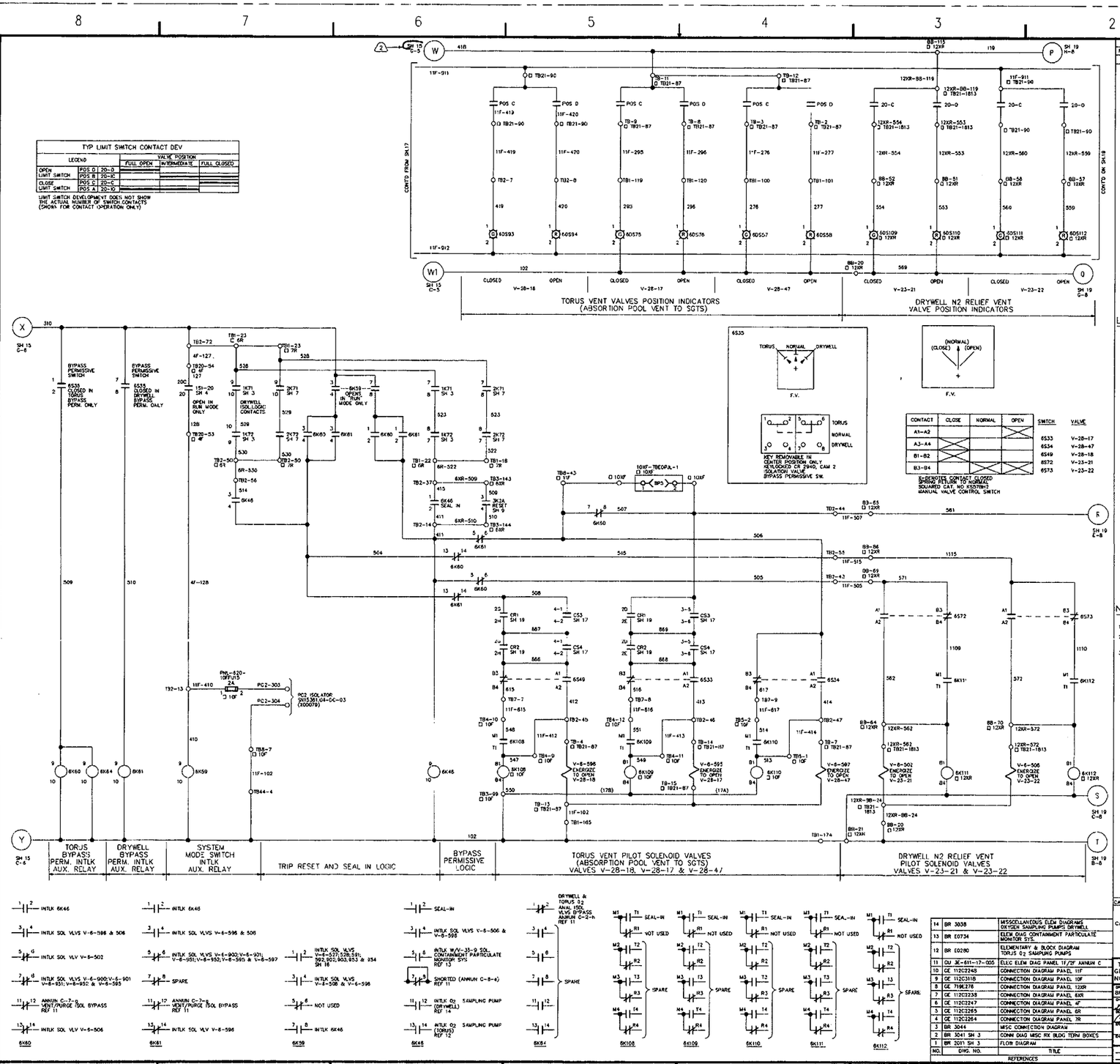

LEGEND:

- ☐ 4F – INDICATES DEVICE LOCATED IN PANEL 4F
- ☐ 6R – INDICATES DEVICE LOCATED IN PANEL 6R
- ☐ 7R – INDICATES DEVICE LOCATED IN PANEL 7R
- ☐ 6XR – INDICATES DEVICE LOCATED IN PANEL 6XR
- ☐ 12XR – INDICATES DEVICE LOCATED IN PANEL 12XR
- ☐ 10F – INDICATES DEVICE LOCATED IN CONTROL PANEL 10F
- ☐ TB21-87 – REACTOR BLDG TERMINAL BOX #21-87
- ☐ TB21-1813 – TERMINAL BOX #21-1813.
- BP – EOP BYPASS PLUG

NOTES:

1. UNLESS OTHERWISE NOTED ALL DEVICES ARE LOCATED IN CONTROL PANEL 11F
2. CONTROL SWITCHES CS1, CS2, CS3, CS4 AND RELAYS CR1 AND CR2 ARE PROTECTED BY PNL. 822-11F.
3. FOR TIP VALVE POSITION INDICATOR CONTACTS DWG GE 237E697 VPF#1679-33

CONTACT	CLOSE	NORMAL	OPEN	SWITCH	VALVE
A1-A2			X	6533	V-28-17
A3-A4	X			6534	V-28-47
B1-B2	X			6549	V-28-18
B3-B4			X	6572	V-23-21
				6573	V-23-22

X-DENOTES CONTACT CLOSED
SHOWN AS ON TOP HOUSING
SQUARED CAT. NO K5070H1
MANUAL VALVE CONTROL SWITCH

NO.	DWG. NO.	TITLE
14	BR 3038	MISSCELLANEOUS ELEM DIAGRAMS OXYGEN SAMPLING PUMPS DRYWELL
13	BR E0734	ELEM DIAG CONTAINMENT PARTICULATE MONITOR SYS.
12	BR E0280	ELEMENTARY & BLOCK DIAGRAM TORUS O2 SAMPLING PUMPS
11	GU 3E-611-17-005	ELEC ELEM DIAG PANEL 11F/3F ANNUN C
10	GE 112C2248	CONNECTION DIAGRAM PANEL 11F
9	GE 112C3118	CONNECTION DIAGRAM PANEL 10F
8	GE 719E276	CONNECTION DIAGRAM PANEL 12XR
7	GE 112C2238	CONNECTION DIAGRAM PANEL 6XR
6	GE 112C2247	CONNECTION DIAGRAM PANEL 4F
5	GE 112C2265	CONNECTION DIAGRAM PANEL 6R
4	GE 112C2264	CONNECTION DIAGRAM PANEL 7R
3	BR 3044	MISC CONNECTION DIAGRAM
2	BR 3041 SH 3	CONN DIAG MISC RX BLDG TERM BOXES
1	BR 2011 SH 3	FLOW DIAGRAM

REFERENCES

CAD FILE NAME: GE 237E566 SH#18

REVISION 0 OF THIS DRAWING WAS REDRAWN FROM GE 237E566, SH.6. REV.24
REVISION 1 OF THIS DRAWING WAS TRANSLATED TO AUTOCAD FROM
CADAM FILE: V3E.841.17.0005.018-.0101

NUCLEAR SAFETY RELATED USE

THIS IS A COMPUTER GENERATED DRAWING DO NOT REVISE IT MANUALLY

GPU NUCLEAR

DRAWN BRENNAN DATE 01/21/99
CHECKED DATE 2/4/99
DESIGN ENGINEER DATE 2-4-99
DESIGN ENGINEER MANAGER DATE

REACTOR PROTECTION SYSTEM ELECTRICAL ELEMENTARY DIAGRAM

OYSTER CREEK | DWG. NO. GE 237E566 | SH. 18 | REV 2

SCALE : NONE

B.A. | TASK

STICK #1

3E-169-17-004 SH. 18

REVISIONS		
REV.	ZONE	DESCRIPTION
2		FCN C098232

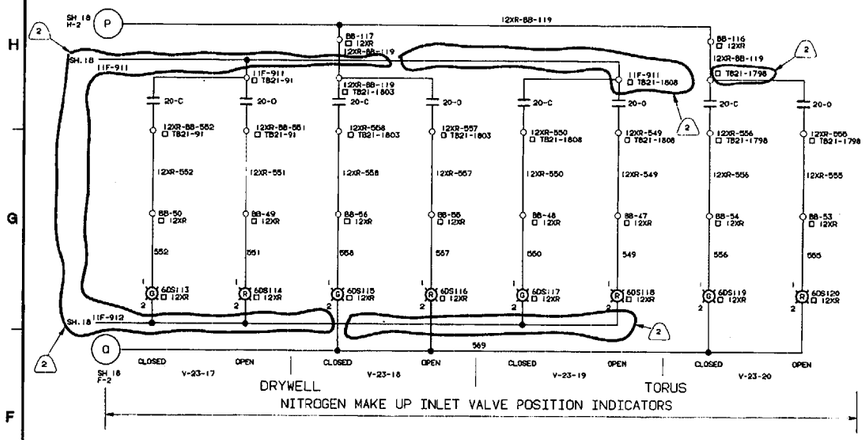

TYP LIMIT SWITCH CONTACT DEV				
LEGEND		VALVE POSITION		
		FULL OPEN	INTERMEDIATE	FULL CLOSED
OPEN LIMIT SWITCH	POS D 20-0			
	POS B 20-IC			
CLOSE LIMIT SWITCH	POS C 20-C			
	POS A 20-IO			

LIMIT SWITCH DEVELOPMENT DOES NOT SHOW THE ACTUAL NUMBER OF SWITCH CONTACTS (SHOWN FOR CONTACT OPERATION ONLY)

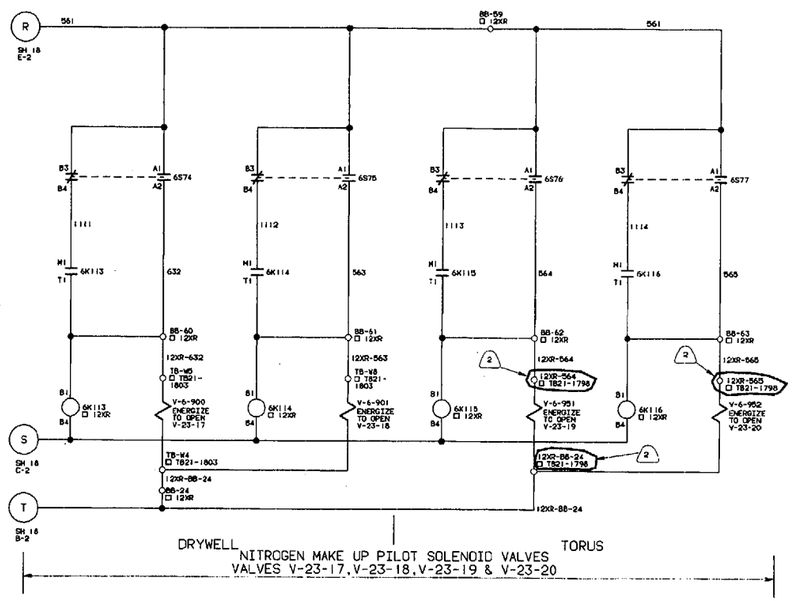

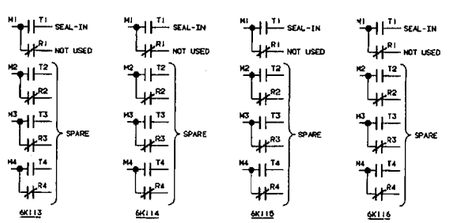

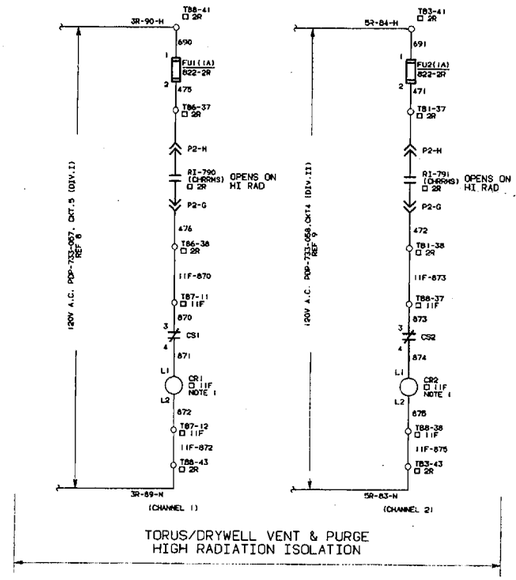

NORM. TEST	BLOCK	CONTACT NUMBERS	NORMAL	TEST	USE FOR:
	1 2	1-2		X	SPARE
	3 4	3-4	X	X	CR1(CS1) CR2(CS2)
	5 6	5-6	X	X	SPARE
	7 8	7-8	X		SPARE

CS1 (CS2 IDENTICAL) MAINTAINED CONTACTS, TWO POSITION KEYLOCK MICROSWITCH CAT. NO. PTK-B-C2-222-GGGG. SEE NOTE 1

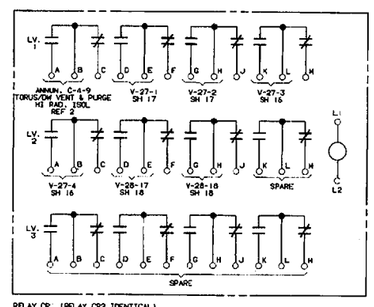

RELAY CR (RELAY CR2 IDENTICAL) POTTER-BRUMFIELD CAT. NO. MDR-163-1 NOTE 1

LEGEND:

- □ 11F - INDICATES DEVICE LOCATED IN CONTROL PANEL 11F
- □ 12XR - INDICATES DEVICE LOCATED IN PANEL 12XR
- □ 2R - INDICATES DEVICE LOCATED IN CONTROL PANEL 2R
- □ TB21-1803 - TERMINAL BOX # 21-1803
- □ TB21-1808 - TERMINAL BOX # 21-1808

NOTES:

1. CONTROL SWITCHES CS1, CS2, AND RELAYS CR1 AND CR2 ARE PREFIXED BY PNL. 822-11F.

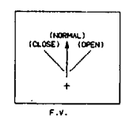

CONTACT	CLOSE	NORMAL	OPEN
A1-A2			X
A3-A4	X		
B1-B2	X		
B3-B4		X	X

X-DENOTES CONTACT CLOSED
SPRING RETURN TO NORMAL
SQUARE D CAT. NO KS5YBHG
MANUAL VALVE CONTROL SWITCH

SWITCH	VALVE
6S74	V-23-17
6S75	V-23-18
6S76	V-23-19
6S77	V-23-20

NO.	DWG. NO.	TITLE
10	GE 719E276 SH 2,2A,3	CONNECTION DIAGRAM - PANEL 12XR
9	GU 3C-733-11-014	PANEL SCHEDULE PDP-733-058
8	GU 3C-733-11-013	PANEL SCHEDULE PDP-733-057
7	GE 112C2248	CONNECTION DIAGRAM PANEL 11F
6	GE 112C2654	CONNECTION DIAGRAM PANEL 2R
5	GE 112C2284	CONNECTION DIAGRAM PANEL 12XR
4	BR 3041	RB VENTILATION SYS CONNECTION DIAG MISC REACTOR BLDG TERMINAL BOXES
3	BR 3044 SH 4	MISC. CONNECTION DIAGRAM
2	GU 3E-611-17-006	ELEC ELEMENTARY DIAGRAM CONTROL PNL 11F/2R ANNUN. C
1	BR 20-3 SH 9	FLOW DIAGRAM

REFERENCES

CADAM FILE NAME: V3E.641.17.0005.019-.0201
THIS IS A COMPUTER GENERATED DWG. DO NOT REVISE IT MANUALLY

REVISION 0 OF THIS DRAWING WAS REDRAWN FROM GE 237E566, SH. 6, REV. 24

NUCLEAR SAFETY RELATED USE

BRENNAN 12/07/94	GPU Nuclear /GE	
DRAWN DATE	REACTOR PROTECTION SYSTEM ELECTRICAL ELEMENTARY DIAGRAM	
CHECKED DATE		
DESIGN LEADER DATE		
ENGINEER DATE	OYSTER CREEK	DWG. NO. GE 237E566 SH. 19 REV. 2
MANAGER APPROVAL DATE		SCALE: NONE
ENG.MECH.	BA 326318	TASK

DWG. NO. GE 237E566 SH. 19

STICK #7

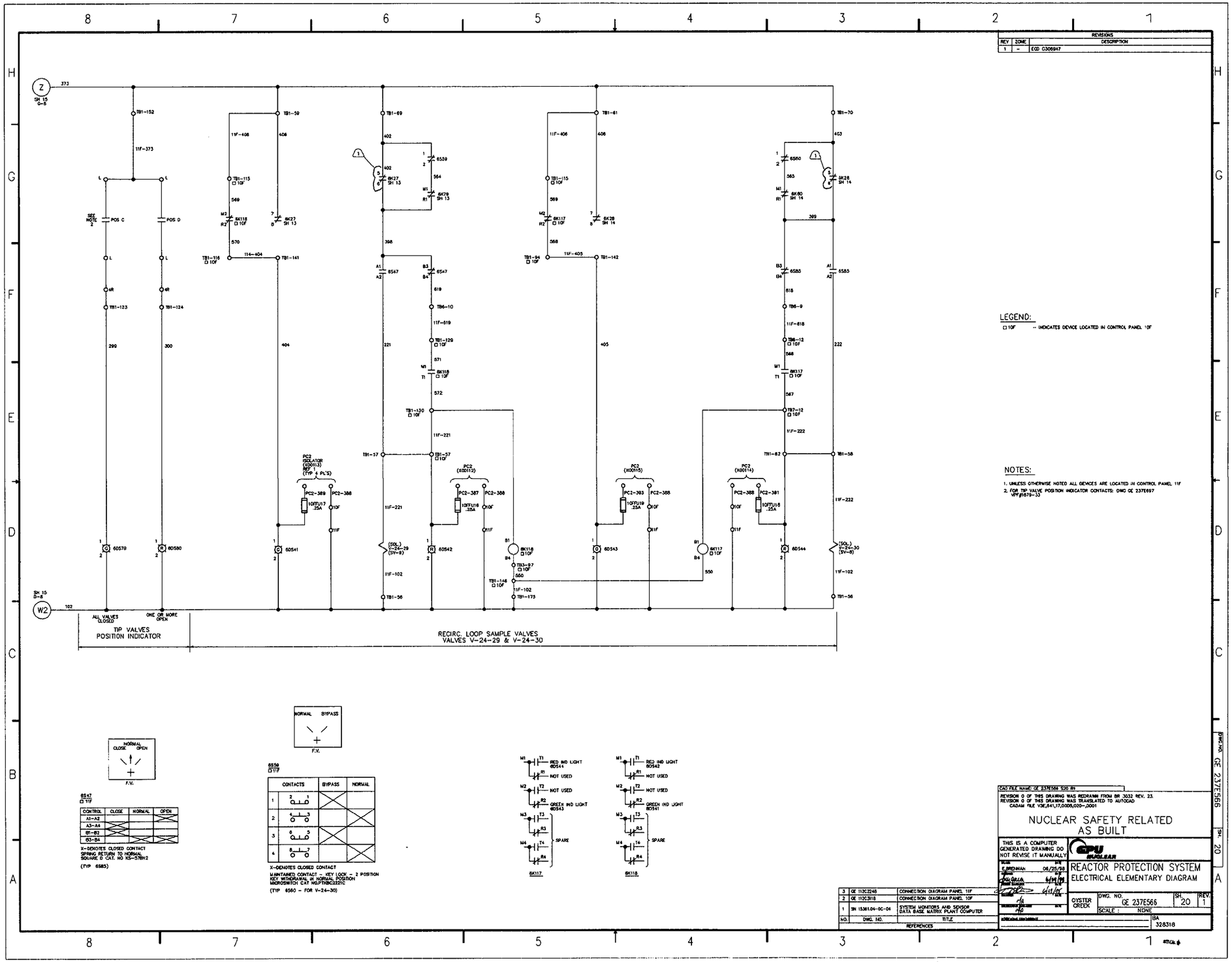

REVISIONS		
REV	ZONE	DESCRIPTION
1	–	ECD C306947

LEGEND:

□ 10F -- INDICATES DEVICE LOCATED IN CONTROL PANEL 10F

NOTES:

1. UNLESS OTHERWISE NOTED ALL DEVICES ARE LOCATED IN CONTROL PANEL 11F
2. FOR TIP VALVE POSITION INDICATOR CONTACTS: DWG GE 237E697 VPF#1679-33

CONTROL	CLOSE	NORMAL	OPEN
A1-A2			X
A3-A4	X		
B1-B2			X
B3-B4	X		

X-DENOTES CLOSED CONTACT
SPRING RETURN TO NORMAL
SQUARE D CAT. NO KS-578H2
(TYP 6S83)

CONTACTS	BYPASS	NORMAL
1	X	
2		X
3	X	
4		X

X-DENOTES CLOSED CONTACT
MAINTAINED CONTACT – KEY LOCK – 2 POSITION
KEY WITHDRAWAL IN NORMAL POSITION
MICROSWITCH CAT NO.PTKBC2221C
(TYP 6S60 – FOR V-24-30)

NO.	DWG. NO.	TITLE
3	GE 112C2248	CONNECTION DIAGRAM PANEL 11F
2	GE 112C3118	CONNECTION DIAGRAM PANEL 10F
1	SN 15381.04-0C-04	SYSTEM MONITORS AND SENSOR DATA BASE MATRIX PLANT COMPUTER

REFERENCES

CAD FILE NAME: GE 237E566 S20 R1

REVISION 0 OF THIS DRAWING WAS REDRAWN FROM BR 3032 REV. 23.
REVISION 0 OF THIS DRAWING WAS TRANSLATED TO AUTOCAD
CADAM FILE V3E,841,17,0005,020-,0001

NUCLEAR SAFETY RELATED
AS BUILT

THIS IS A COMPUTER GENERATED DRAWING DO NOT REVISE IT MANUALLY

GPU NUCLEAR

REACTOR PROTECTION SYSTEM
ELECTRICAL ELEMENTARY DIAGRAM

OYSTER CREEK

DWG. NO. GE 237E566 | SH. 20 | REV. 1
SCALE : NONE
BA 328318

DWG. NO. GE 237E566 | SH. 20

REV	ZONE	REVISIONS DESCRIPTION
70	NOTED	ECO C306524

NOTES

1. FOR LOCATION OF TEMPERATURE ELEMENT– SEE CONSAT PLAN FOR REACTOR BUILDING BR 3130.
2. FOR INSTRUMENT WIRING FROM TEMPERATURE ELEMENT TO PANELS–SEE ELECTRICAL DRAWING EB CPUN–7069–IC–1001

NOTE:

THIS DRAWING IS AN OVERALL SIMPLIFIED VIEW OF PIPING SYSTEMS PENETRATING THE DRYWELL AND IS TO BE USED AS SUCH. FOR ACTUAL PIPING SYSTEMS, VALVES, LINES, INSTRUMENTATION, ETC. SEE APPROPRIATE SYSTEM FLOW DIAGRAMS.

CAD FILE NAME : GE 237E726 S1 P70

REVISION R6 OF THIS DRAWING WAS TRANSLATED TO AUTOCAD FROM CADAM FILE V3E.243.31.01DG.001-.0601

NO.	DWG. NO.	TITLE
3	BR-2001 SH3	MECHANICAL DRAWING INDEX
2	BR-2001 SH2	ABBREVIATIONS
1	BR-2001 SH1	MECHANICAL SYMBOLS

REFERENCES

THIS IS A COMPUTER GENERATED DRAWING DO NOT REVISE IT MANUALLY

DRAWN	T.RUSZKOUR	12-01-95
DESIGNED	B.STANKIEWICZ	12-22-95
DESIGN CHECKED		10-23-97
DESIGN APPROVED	N/A	
DESIGN CHANGE	N/A	

GPU NUCLEAR

DRYWELL AND SUPPRESSION SYSTEM

FLOW DIAGRAM

OYSTER CREEK

DWG. NO. GE 237E726 | SH. 1 | REV. 70

SCALE : NONE

PIMS # N/A

DOCUMENT GE 237E726 SH. 1 A

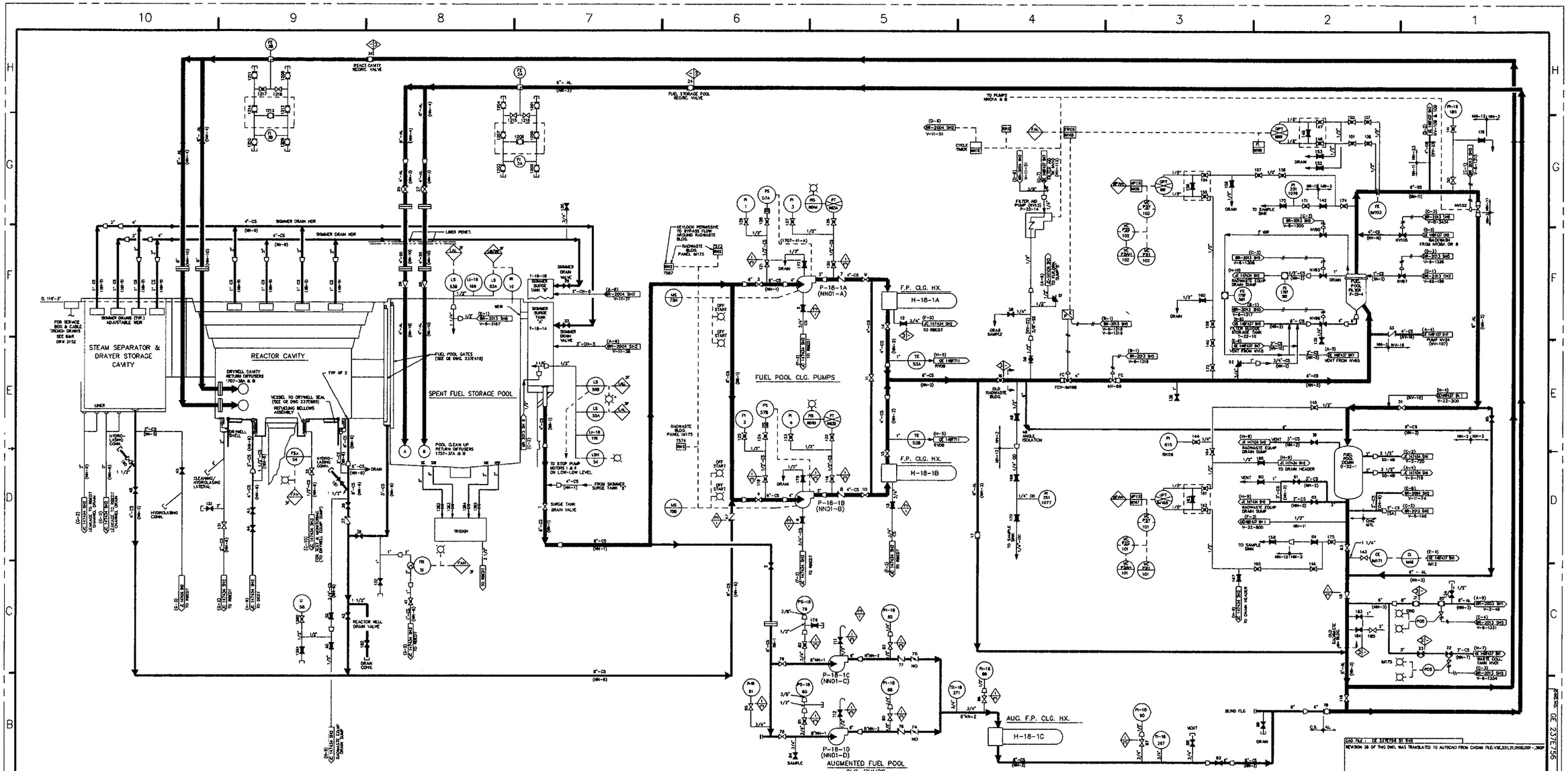
STEAM SEPARATOR & DRAYER STORAGE CAVITY
REACTOR CAVITY
SPENT FUEL STORAGE POOL
FUEL POOL CLG. PUMPS
F.P. CLG. HX.
H-18-1A
H-18-1B
P-18-1A (NN01-A)
P-18-1B (NN01-B)
P-18-1C (NN01-C)
P-18-1D (NN01-D)
AUGMENTED FUEL POOL CLG. PUMPS
AUG. F.P. CLG. HX.
H-18-1C
FUEL POOL FILTER DRAIN SUMP
FUEL POOL FILTER STORAGE TANK
SKIMMER SURGE TANK "B"
SKIMMER SURGE TANK "A"
TROUGH
REACTOR WELL DRAIN VALVE
SKIMMER DRAIN HDR
LINER PENET.
FUEL STORAGE POOL REGRIG. VALVE
REACT.CAVITY REGRIG. VALVE
TO PUMPS NN01A & B
TO SAMPLE SINK
TO DRAIN HEADER
OLD RADWASTE BLDG
RADWASTE BLDG PANEL IM175
KEYLOCK PERMISSIVE TO BYPASS FLOW TO OLD RADWASTE BLDG
FILTER AID PUMP (NV12)
F-22-16
CYCLE TIMER
GRAB SAMPLE
ANGLE ISOLATION
BLIND FLG
VENT
DRAIN
SAMPLE
OFF START
ON START
TO STOP PUMP MOTORS I & II ON LOW-LOW LEVEL
FROM SKIMMER SURGE TANK "B"
SURGE TANK DRAIN VALVE
SKIMMER DRAIN VALVE
DRYWELL CAVITY RETURN DIFFUSERS 1707-38A & B
VESSEL TO DRYWELL SEAL (SEE GE DWG 237E985)
REFUELING BELLOWS ASSEMBLY
POOL CLEAN UP RETAIN DIFFUSERS 1737-37A & B
FUEL POOL GATES (SEE GE DWG 237E478)
CLEANING/ HYDROLASING LATERAL
HYDROLASING CONN.
DRAIN CONN.
FOR SERVICE BOX & CABLE TRENCH DRAINS SEE B&R DR# 2152
SKIMMER DRAINS (TYP.) ADJUSTABLE WDR
LINER
DRYWELL SHELL
TYP OF 2
6'-11F-3"
6"-AL (NN-3)
6"-CS (NN-1)
8"-CS (NN-8)
4"-CS (NN-2)
3"-CS (NN-2)
1"-CS (NN-9)
1/2"-CS (NN-9)
6"-SS (NN-11)
8"-AL (NN-3)
COLOR LEGEND
CLASS 3 - GREEN
NON CLASS (-) - BLACK
GENERAL NOTES:
1. ALL VALVES FAIL CLOSED UNLESS OTHERWISE DESIGNATED.
2. ALL RADWASTE ALARMS WILL BE ON AN ANNUNCIATOR ON THE RADWASTE PANEL. A COMMON TROUBLE ALARM WILL ANNUNCIATE IN THE MAIN CONTROL ROOM.
3. NUMBERS IN PARENTHESES ARE A.E. IDENTIFICATION NUMBERS.
4. FOR EQUIPMENT MARKED NNXX & NVXX SEE 191X697. FOR EQUIPMENT MARKED NXX & NVXX SEE 194X559 & 194X556.
LABELING NOTE:
ALL VALVES ON THIS SHEET ARE PREFIXED BY V-18 UNLESS OTHERWISE NOTED.
45 ALL ISI BOUNDARY INFORMATION INCORPORATED
REV. ZONE REVISIONS
3 BR-2001 SH3 MECHANICAL DRAWING INDEX
2 BR-2001 SH2 ABBREVIATIONS
1 BR-2001 SH1 MECHANICAL SYMBOLS
NO. DWG. NO. TITLE REFERENCES
CAD FILE: GE 237E756 S1 R45
REVISION 36 OF THIS DWG. WAS TRANSLATED TO AUTOCAD FROM CADAM FILE:V3E,23,L21,D100,D01-,280F
THIS IS A COMPUTER GENERATED DRAWING DO NOT REVISE IT MANUALLY
NANCY A. CARLSON 9-29-00
CLARENCE CAO 9-29-00
AmerGen
SPENT FUEL POOL COOLING FLOW DIAGRAM
OYSTER CREEK
DWG. NO. GE 237E756
SH. 1
REV. 45
SCALE : NONE
PHMS #
REFERS: GE 237E756 SH. 1

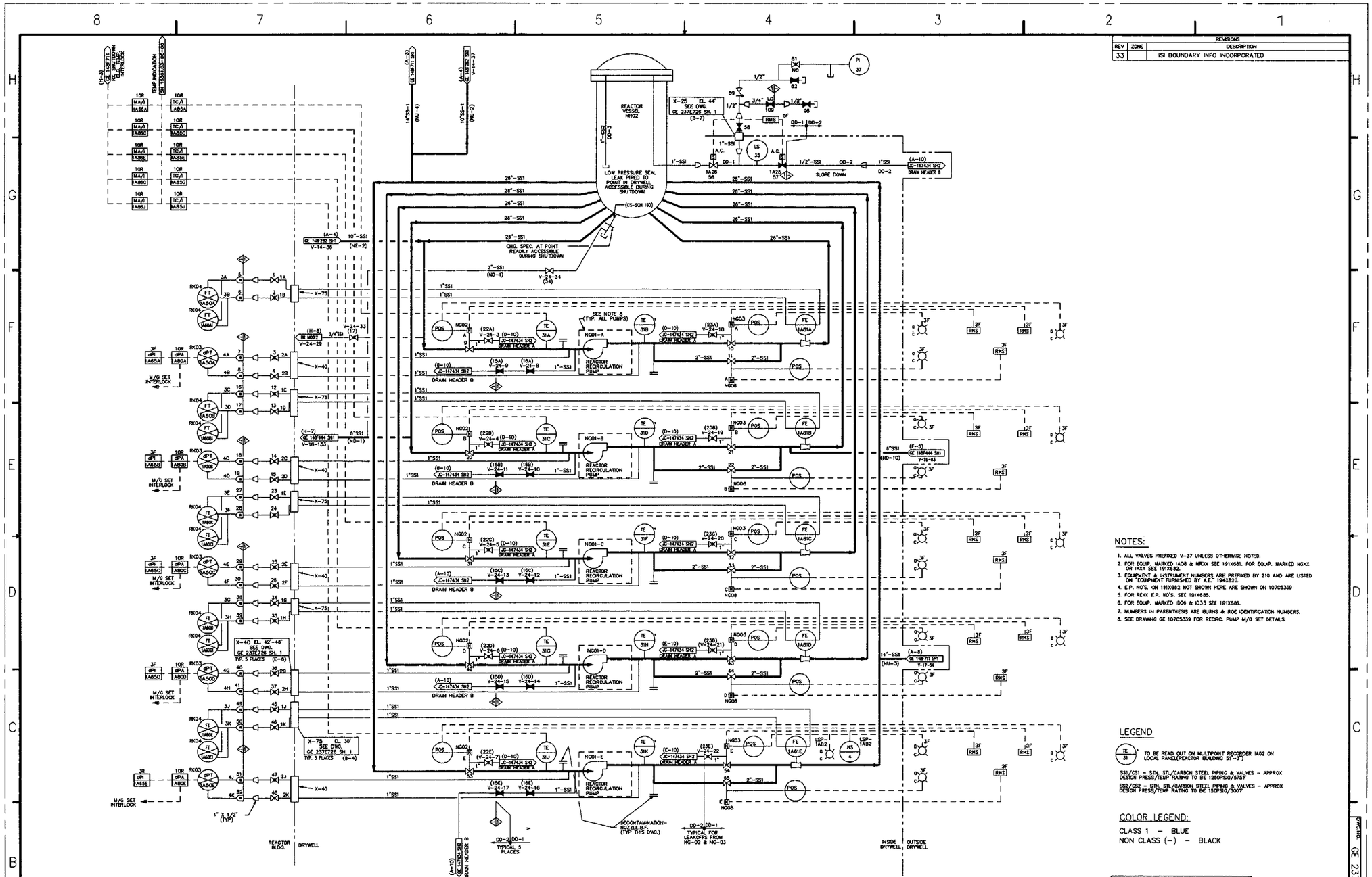

REVISIONS		
REV	ZONE	DESCRIPTION
33		ISI BOUNDARY INFO INCORPORATED

NOTES:

1. ALL VALVES PREFIXED V-37 UNLESS OTHERWISE NOTED.
2. FOR EQUIP. MARKED IA08 & NRXX SEE 191X681. FOR EQUIP. MARKED NGXX OR IAXX SEE 191X682.
3. EQUIPMENT & INSTRUMENT NUMBERS ARE PREFIXED BY 210 AND ARE LISTED ON "EQUIPMENT FURNISHED BY A.E." 194X820.
4. E.P. NO'S. ON 191X682 NOT SHOWN HERE ARE SHOWN ON 107C5339
5. FOR REXX E.P. NO'S. SEE 191X685.
6. FOR EQUIP. MARKED ID06 & ID33 SEE 191X686.
7. NUMBERS IN PARENTHESIS ARE BURNS & ROE IDENTIFICATION NUMBERS.
8. SEE DRAWING GE 107C5339 FOR RECIRC. PUMP M/G SET DETAILS.

LEGEND

TE 31 — TO BE READ OUT ON MULTIPOINT RECORDER IA02 ON LOCAL PANEL(REACTOR BUILDING 51'-3")

SS1/CS1 - STN. STL/CARBON STEEL PIPING & VALVES - APPROX DESIGN PRESS/TEMP RATING TO BE 1250PSIG/575°F

SS2/CS2 - STN. STL/CARBON STEEL PIPING & VALVES - APPROX DESIGN PRESS/TEMP RATING TO BE 150PSIG/300°F

COLOR LEGEND:

CLASS 1 - BLUE
NON CLASS (-) - BLACK

CAD FILE NAME: GE 237E798 S1 R33

REVISION 21 OF THIS DRAWING WAS REDRAWN FROM PART OF GE 237E798, REV20
REVISION 32 OF THIS DRAWING WAS TRANSLATED TO AUTOCAD FROM CADAM FILE: V3E.223.21.0100.001-.3201

REGULATORY REQUIRED USE

THIS IS A COMPUTER GENERATED DRAWING DO NOT REVISE IT MANUALLY

DRAWN	N. CARLSON	10/06/2000
CHECKED	B. VERGARA	10/09/2000
REVIEWED		
APPROVED		
ENGINEERING MANAGER		

AmerGen

RECIRCULATION SYSTEM
FLOW DIAGRAM

OYSTER CREEK — DWG. NO. GE 237E798 — SH. 1 OF 1 — REV. 33
SCALE : NONE
WA. NO.

NO.	DWG. NO.	TITLE
3	BR-2001 SH3	MECHANICAL DRAWING INDEX
2	BR-2001 SH2	ABBREVIATIONS
1	BR-2001 SH1	MECHANICAL SYMBOLS

REFERENCES

DWG.NO. GE 237E798 SH. 1 OF 1

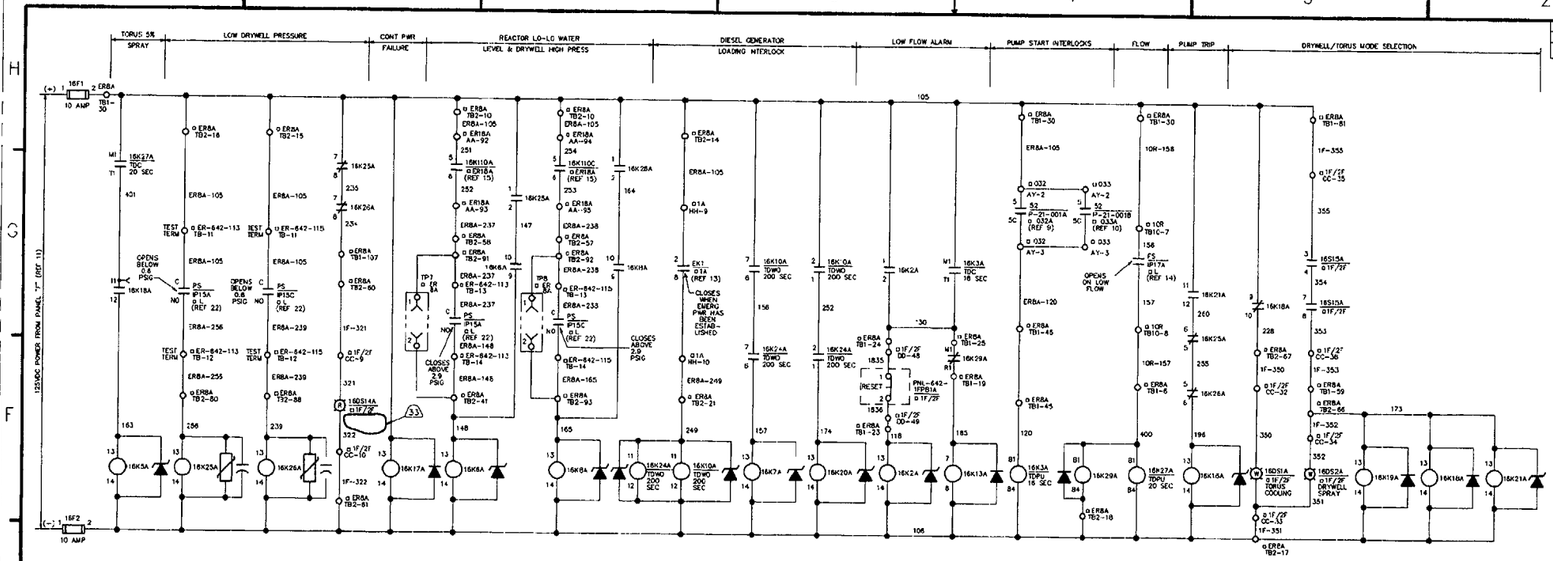

REVISIONS		
REV	ZONE	DESCRIPTION
33		ECO C306744

LEGEND:

- ▭ 1OR – INDICATES DEVICE LOCATED ON PANEL 1OR
- ▭ 1A – INDICATES DEVICE LOCATED ON 4160V SWITCHGEAR 1A, UNIT A1
- ▭ 032A – INDICATES DEVICE LOCATED ON UNIT SUB-STATION 1A2 UNIT 032A
- ▭ 033A – INDICATES DEVICE LOCATED ON UNIT SUB-STATION 1A2 UNIT 033A
- ▭ ERBA – INDICATES DEVICE LOCATED ON PANEL ERBA
- ▭ ER-642-113 – INDICATES DEVICE LOCATED ON AUX RELAY PANEL ER-642-113
- ▭ L – INDICATES SWITCH MTD IN REACTOR BLDG
- ▭ 1F/2F – INDICATES DEVICE LOCATED ON PANEL 1F/2F
- ▭ ER-642-115 – INDICATES DEVICE LOCATED ON AUX RELAY PANEL ER-642-115
- ▭ 032 – INDICATES DEVICE LOCATED ON USS1A2, UNIT 032
- ▭ 033 – INDICATES DEVICE LOCATED ON USS1A2, UNIT 033
- ▭ ERIBA – INDICATES DEVICE LOCATED ON PANEL ERIBA
- ⊸ –INDICATES BANANA TEST JACK

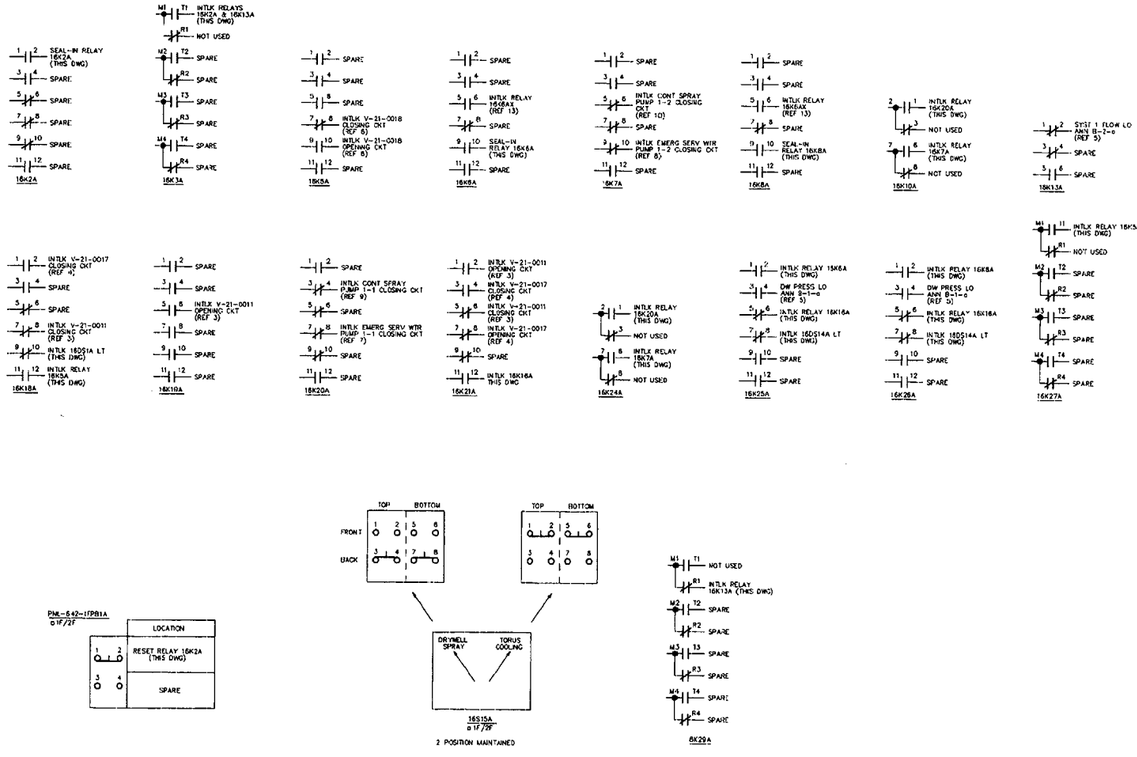

NO.	DWG. NO.	TITLE
23	MPR 1083-88-01 SHT. 1	CONTROL ROOM RELABELING & DEMARCATION 1F/2F BENCHBD
22	GE 112C2827 SH 2	SPEC CONTROL RACK RK03 REACTOR PROT & NSS SYSTEM
21	GE 719E231	CONNECTION DIAG CONTROL PANEL 1F/2F
20	GE 148E740	P & ID CONTAINMENT SPRAY SYSTEM
19	GU 3D-775-18-1001	MISC CONNECTION DIAG
18	NH 7023-56795-330	WIRING DIAG AUX RELAY PANEL ER-642-115
17	NH 7023-56795-338	WIRING DIAG AUX RELAY PANEL ER-642-113
16	GE 719E202	CONNECTION DIAG RELAY PANEL ERBA
15	GE 718E644	ELEC ELEM DIAG CORE SPRAY CONTROL
14	GE 148F912	PROCESS INSTRUMENTATION
13	GE 223R0173 SH.1A	ELECTRICAL ELEMENTARY DIAGRAM NORMAL EMERGENCY POWER INTERLOCKS
12	GE 237E728	P & ID DRYWELL SUPPRESSION SYSTEM
11	GU 3C-733-11-003	125VDC STATION DC SYSTEM PANEL SCHEDULE, POWER PANEL DC-F
10	GE 116B6328 SH.11A	ELECTRICAL ELEMENTARY DIAGRAM CONTAINMENT SPRAY PUMP 1-2 (P-21-0018)
9	GE 116B6328 SH.1'	ELECTRICAL ELEMENTARY DIAGRAM CONTAINMENT SPRAY PUMP 1-1 (P-21-0016)
8	GE 223R0173 SH.16A	ELECTRICAL ELEMENTARY DIAGRAM EMER SERVICE WATER PUMP -2 (P-3-0038)
7	GE 223R0173 SH.16	ELECTRICAL ELEMENTARY DIAGRAM EMER SERVICE WATER PUMP 1-1 (P-3-0036)
6	GE 157B6350 SH 157A	ELECTRICAL ELEMENTARY DIAGRAM PRESSURE SUPPRESSION VLV V-21-0018
5	GE 3C-611-17-004 SH.1&2	ELECTRICAL ELEMENTARY DIAGRAM CONTROL PANEL 1F/2F ANNUN "B"
4	GE 157B6350 SH.167B	ELECTRICAL ELEMENTARY DIAGRAM CONT SPRAY VALVE V-21-0017
3	GE 157B6350 SH.167B	ELECTRICAL ELEMENTARY DIAGRAM CONT SPRAY VALVE V-21-0011
2	GE 719E231SH 1	CONNECTION DIAG PANEL ERIBA
1	GE 112C3701	CONNECTION DIAG CONTROL PANEL 1OR

REFERENCES

CAD FILE NAME: GE 237E901 S1 R32

REVISION 31 OF THIS DRAWING WAS TRANSLATED TO AUTOCAD FROM CADAM FILE V3E.642.17.0003.001-.3101

NUCLEAR SAFETY RELATED USE

THIS IS A COMPUTER GENERATED DRAWING DO NOT REVISE IT MANUALLY

GPU NUCLEAR

DRAWN E.BRENNAN 2/9/89

CONTAINMENT SPRAY LOGIC
ELECTRICAL ELEMENTARY DIAGRAM
CONTAINMENT SPRAY SYSTEM 1

OYSTER CREEK | DWG. NO. GE 237E901 | SH. 1 | REV. 33 | SCALE: NONE | BA | TASK

SROK87

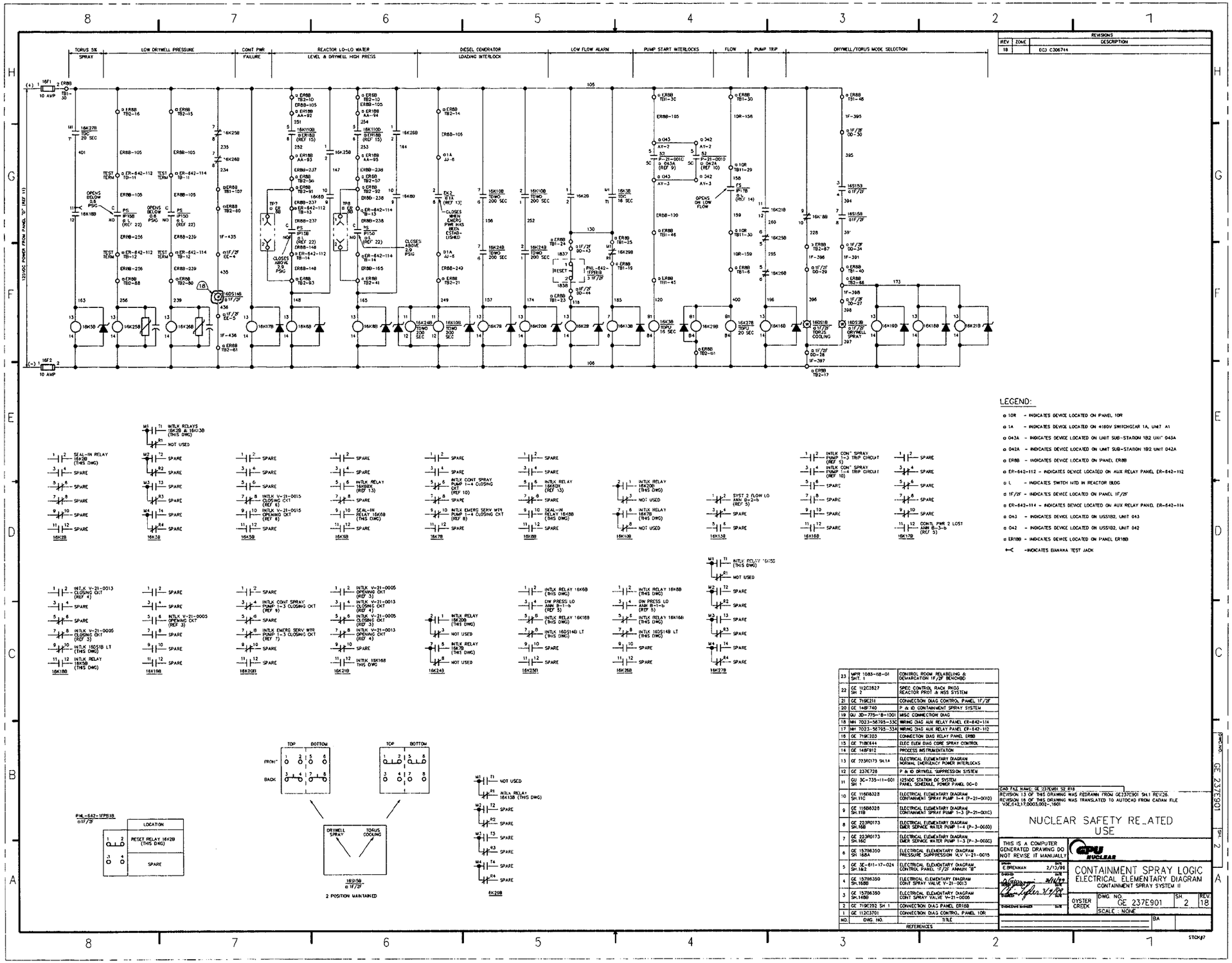

REV	ZONE	DESCRIPTION
18		ECO C306744

NO.	DWG. NO.	TITLE
23	MPR 1083-88-01 SHT. 1	CONTROL ROOM RELABELING & DEMARCATION 1F/2F BENCHBD
22	GE 112C2827 SH 2	SPEC CONTROL RACK PK03 REACTOR PROT & NSS SYSTEM
21	GE 719E211	CONNECTION DIAG CONTROL PANEL 1F/2F
20	GE 148-740	P & ID CONTAINMENT SPRAY SYSTEM
19	GU 3D-775-"B-1001	MISC CONNECTION DIAG
18	NH 7023-56795-33C	WIRING DIAG AUX RELAY PANEL ER-642-114
17	NH 7023-56795-33A	WIRING DIAG AUX RELAY PANEL ER-642-112
16	GE 719E203	CONNECTION DIAG RELAY PANEL ER88
15	GE 718E444	ELEC ELEM DIAG CORE SPRAY CONTROL
14	GE 148F912	PROCESS INSTRUMENTATION
13	GE 223R173 SH.1A	ELECTRICAL ELEMENTARY DIAGRAM NORMAL EMERGENCY POWER INTERLOCKS
12	GE 237E726	P & ID DRYWELL SUPPRESSION SYSTEM
11	GU 3C-735-11-001 SH 1	125VDC STATION DC SYSTEM PANEL SCHEDULE, POWER PANEL DC-D
10	GE 116B6328 SH.11C	ELECTRICAL ELEMENTARY DIAGRAM CONTAINMENT SPRAY PUMP 1-4 (P-21-0010)
9	GE 116B6328 SH.11B	ELECTRICAL ELEMENTARY DIAGRAM CONTAINMENT SPRAY PUMP 1-3 (P-21-0010)
8	GE 223R0173 SH.16B	ELECTRICAL ELEMENTARY DIAGRAM EMER SERVICE WATER PUMP 1-4 (P-3-0030)
7	GE 223R0173 SH.16C	ELECTRICAL ELEMENTARY DIAGRAM EMER SERVICE WATER PUMP 1-3 (P-3-0030)
6	GE 157H6350 SH 16BA	ELECTRICAL ELEMENTARY DIAGRAM PRESSURE SUPPRESSION VLV V-21-0015
5	GE 3C-611-17-024 SH 1&2	ELECTRICAL ELEMENTARY DIAGRAM CONTROL PANEL "F/2F ANNUNC "B"
4	GE 157H6350 SH.16BB	ELECTRICAL ELEMENTARY DIAGRAM CONT SPRAY VALVE V-21-0013
3	GE 157H6350 SH.16BD	ELECTRICAL ELEMENTARY DIAGRAM CONT SPRAY VALVE V-21-0005
2	GE 719E292 SH 1	CONNECTION DIAG PANEL ER18B
1	GE 112C3701	CONNECTION DIAG CONTROL PANEL 10R

REFERENCES

CAD FILE NAME: GE 237E901 S2 R18
REVISION 13 OF THIS DRAWING WAS REDRAWN FROM GE237E901 SH.1 REV.26.
REVISION 18 OF THIS DRAWING WAS TRANSLATED TO AUTOCAD FROM CADAM FILE VOE.0127.0003.002-.1901

NUCLEAR SAFETY RELATED USE

THIS IS A COMPUTER GENERATED DRAWING DO NOT REVISE IT MANUALLY

GPU NUCLEAR

DRAWN E.BRENNAN DATE 2/13/96
CHECKED DATE
DATE
DATE
DATE

CONTAINMENT SPRAY LOGIC ELECTRICAL ELEMENTARY DIAGRAM

CONTAINMENT SPRAY SYSTEM II

OYSTER CREEK

DWG NO. GE 237E901 SH 2 REV 18

SCALE : NONE

BA

STCKg7

REVISIONS		
REV	ZONE	DESCRIPTION
32		ECO C307706

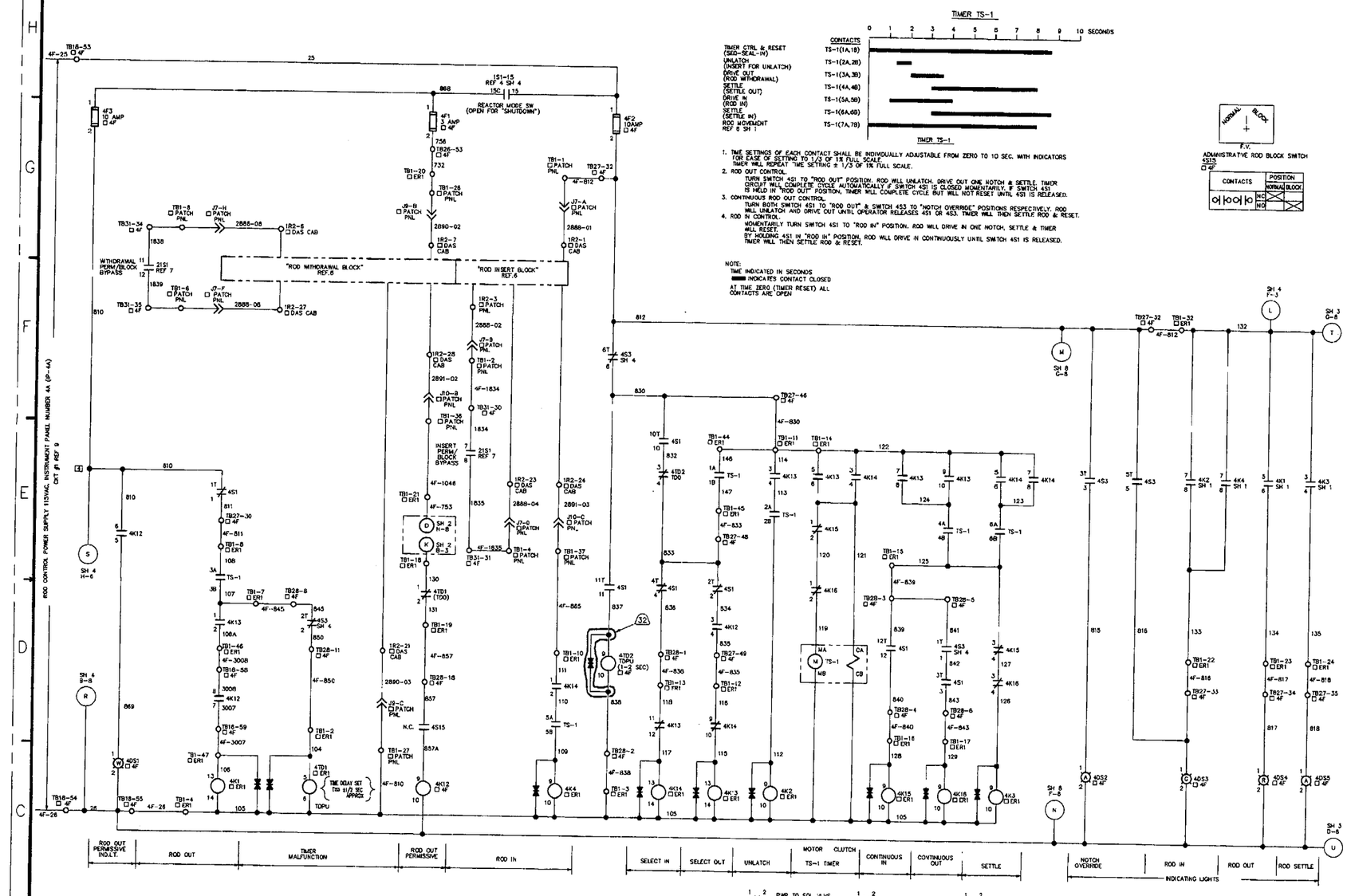

LEGEND:

- ER1 – INDICATES DEVICE LOCATED IN PANEL ER1
- 4F – INDICATES DEVICE LOCATED IN PANEL 4F
- PATCH PNL – INDICATES DEVICE LOCATED IN PATCH PANEL ER-653-089
- DAS CAB – INDICATES DEVICE LOCATED IN DAS CABINET CP-653-002

GENERAL NOTES:

1. FOR GMS 2 INFORMATION RETRIEVAL "0" DIGIT MAY BE REQUIRED TO BE ADDED TO COMPONENT TAG NO.

   EXAMPLE:

   COMPONENT TAG NO. V-15-128

   GMS 2 V-15-0128

   (THIS GENERAL NOTE ALSO APPLIES SH 2 THRU SH 8)

2. SWITCHES 4S1 & 4S3 ARE SHOWN IN "OFF" POSITION UNLESS OTHERWISE NOTED.

NO.	DWG. NO.	TITLE
10	GE 706E212	RODBLOCK DISPLAY ELEMENTARY DIAGRAM
9	GU 3C-733-11-007	PANEL SCHEDULE INSTRUMENT PANEL NO. 4A (P-4A)
8	BR E0515	RODWORTH MINIMIZER PATCH PANEL ER-653-089 ASSY & CONNECTION
7	GU 3C-653-18-1000	RODWORTH MINIMIZER CAB CP-653-002 CONNECTION DIAGRAM
6	GE 729E838	ELECTRICAL ELEMENTARY DIAGRAM RWM SYSTEM
5	GE 112C3732	CONNECTION DIAGRAM PANEL ER1
4	GE 237E566	REACTOR PROTECTION SYS ELEMENTARY DIAGRAM
3	GE 112C2247	CONNECTION DIAGRAM PANEL 4F
2	GE 237E698	ELECTRICAL CONNECTION DIAGRAM PANEL ER1
1	GU 3E-811-17-010	ELEC ELEM DIAGRAM CONTROL PANEL SF/BF ANNUN. H

REFERENCES

CAD FILE NAME: GE 237E912 S1 R32

REVISION 29 OF THIS DWG WAS REDRAWN FROM GE 237E912 SH 1 REV 28

REVISION 31 OF THIS DRAWING WAS TRANSLATED TO AUTOCAD FROM CADAM FILE V3E,628,17,0001,001-,3101

REGULATORY REQUIRED USE

THIS IS A COMPUTER GENERATED DRAWING DO NOT REVISE IT MANUALLY

GPU NUCLEAR/GE

		DATE
DRAWN	G. BARBY	12/04/86
CHECKED	D. Gunn	12/04/86
PROJ. ENGINEER		
CHANGE		12/18/86
ENGINEERING MANAGER		

REACTOR MANUAL CONTROL SYS
ELECTRICAL ELEMENTARY DIAGRAM

OYSTER CREEK | DWG. NO. GE 237E912 | SH. 1 | REV. 32

SCALE : NONE

DWG. NO. GE 237E912 SH. 1

STICK #7

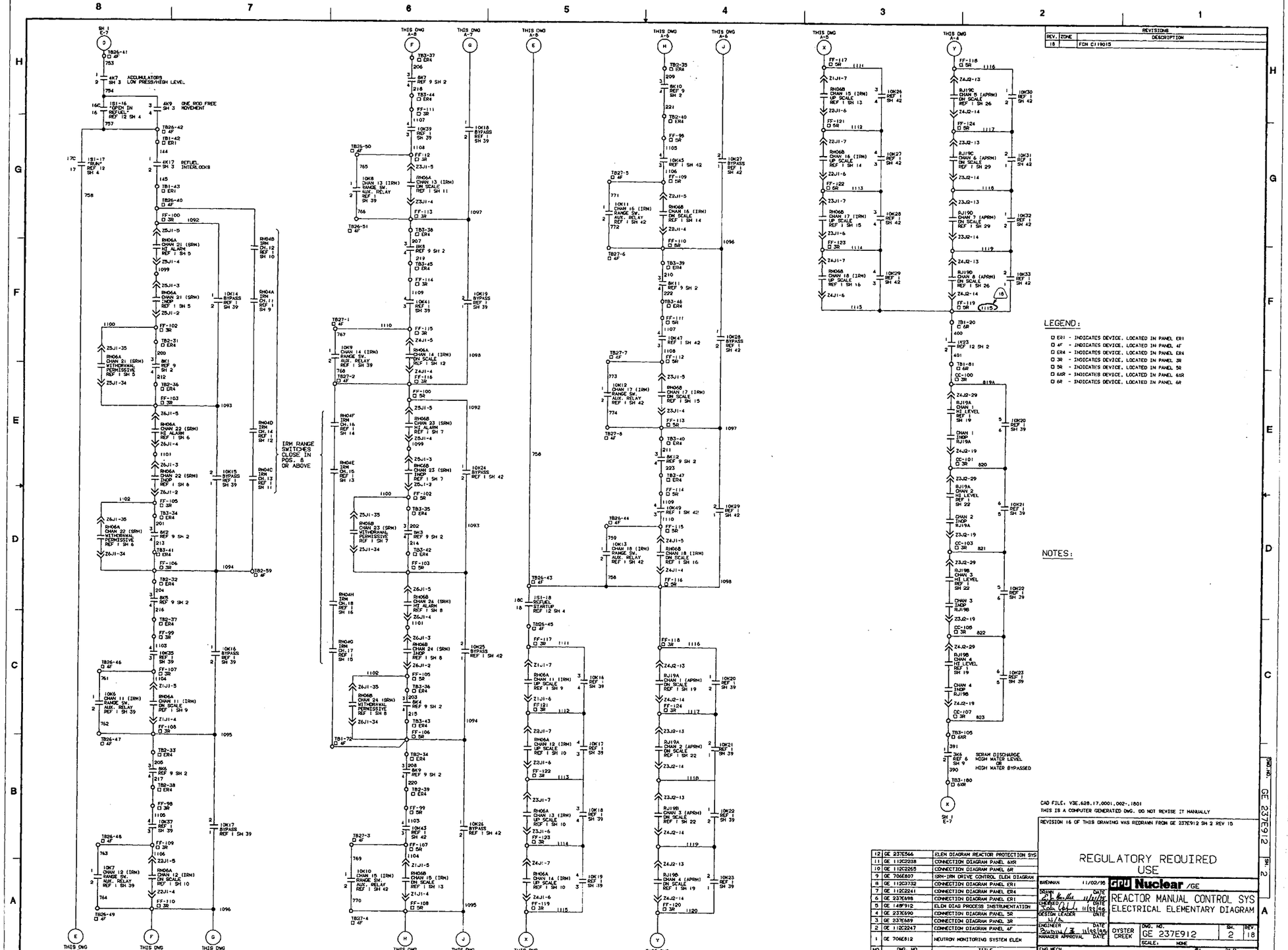

REVISIONS		
REV.	ZONE	DESCRIPTION
18		FCN C119015

LEGEND:

- ER1 - INDICATES DEVICE, LOCATED IN PANEL ER1
- 4F - INDICATES DEVICE, LOCATED IN PANEL 4F
- ER4 - INDICATES DEVICE, LOCATED IN PANEL ER4
- 3R - INDICATES DEVICE, LOCATED IN PANEL 3R
- 5R - INDICATES DEVICE, LOCATED IN PANEL 5R
- 6XR - INDICATES DEVICE, LOCATED IN PANEL 6XR
- 6R - INDICATES DEVICE, LOCATED IN PANEL 6R

NOTES:

CAD FILE: V3E.528.17.0001.002-.1801
THIS IS A COMPUTER GENERATED DWG. DO NOT REVISE IT MANUALLY

REVISION 16 OF THIS DRAWING WAS REDRAWN FROM GE 237E912 SH 2 REV 15

NO.	DWG. NO.	TITLE
12	GE 237E566	ELEM DIAGRAM REACTOR PROTECTION SYS
11	GE 112C2238	CONNECTION DIAGRAM PANEL 6XR
10	GE 112C2265	CONNECTION DIAGRAM PANEL 6R
9	GE 706E807	SRM-IRM DRIVE CONTROL ELEM DIAGRAM
8	GE 112C3732	CONNECTION DIAGRAM PANEL ER1
7	GE 112C2241	CONNECTION DIAGRAM PANEL ER4
6	GE 237E698	CONNECTION DIAGRAM PANEL ER1
5	GE 148F912	ELEM DIAG PROCESS INSTRUMENTATION
4	GE 237E690	CONNECTION DIAGRAM PANEL 5R
3	GE 237E689	CONNECTION DIAGRAM PANEL 3R
2	GE 112C2247	CONNECTION DIAGRAM PANEL 4F
1	GE 706E812	NEUTRON MONITORING SYSTEM ELEM

REFERENCES

REGULATORY REQUIRED USE

BRENNAN 11/02/95 — DRAWN
DATE 11/11/95 — CHECKED
DATE 11/22/95 — DESIGN LEADER
DATE 11/6 — ENGINEER
DATE 11/29/95 — MANAGER APPROVAL
DATE

GPU Nuclear /GE

REACTOR MANUAL CONTROL SYS
ELECTRICAL ELEMENTARY DIAGRAM

OYSTER CREEK — DWG. NO. GE 237E912 — SH. 2 — REV. 18
SCALE: NONE
ENG.MECH. — JOB 326318 — W.O.

STIOX47

GE 237E912 SH. 2 REV. 18

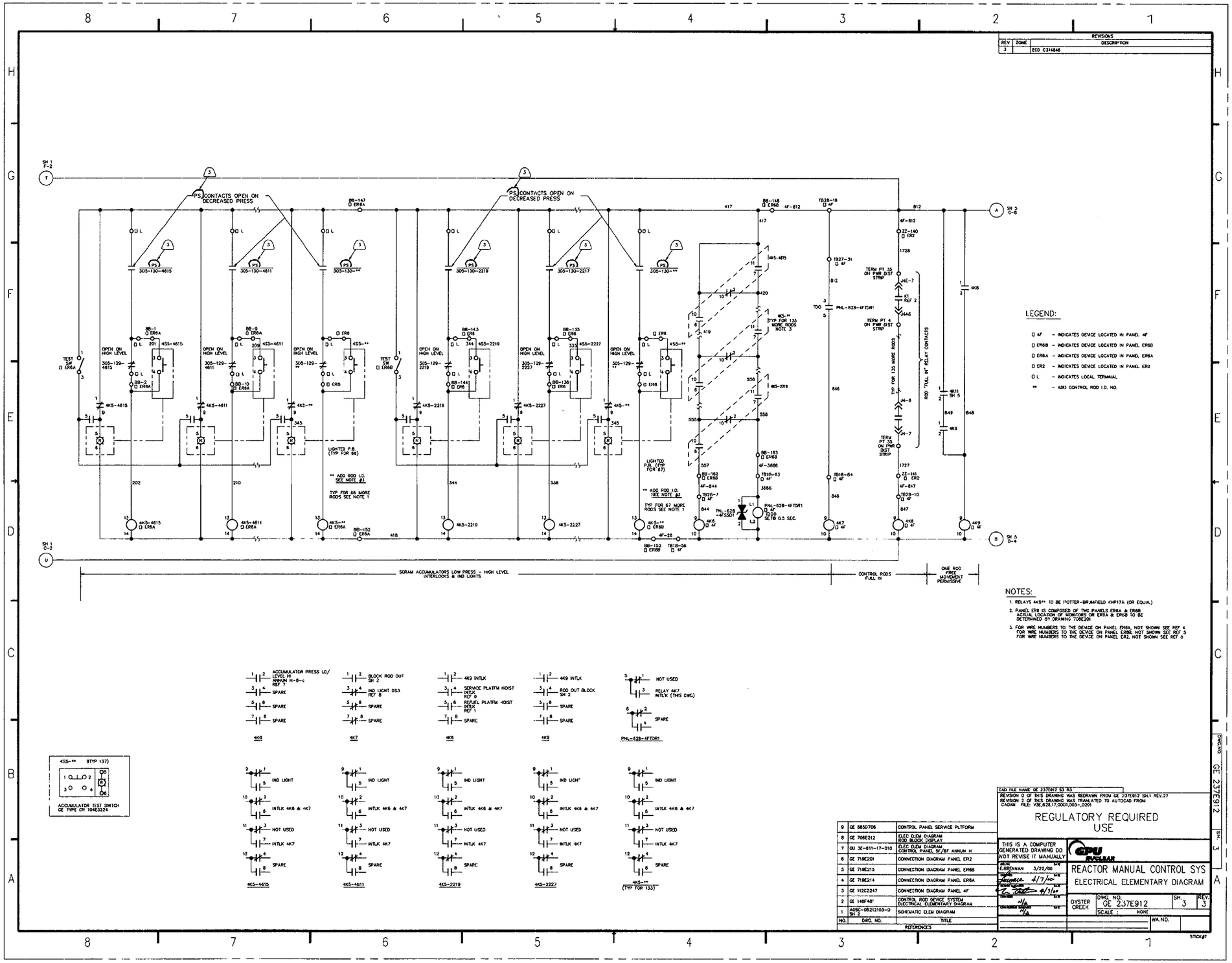

LEGEND:

- □ 4F – INDICATES DEVICE LOCATED IN PANEL 4F
- □ ER6B – INDICATES DEVICE LOCATED IN PANEL ER6B
- □ ER6A – INDICATES DEVICE LOCATED IN PANEL ER6A
- □ ER2 – INDICATES DEVICE LOCATED IN PANEL ER2
- □ L – INDICATES LOCAL TERMINAL
- ** – ADD CONTROL ROD I.D. NO.

NOTES:

1. RELAYS 4K5** TO BE POTTER-BRUMFIELD KHP17A (OR EQUAL)
2. PANEL ER8 IS COMPOSED OF TWO PANELS ER6A & ER6B ACTUAL LOCATION OF MONITORS OR ER6A & ER6B TO BE DETERMINED BY DRAWING 706E201
3. FOR WIRE NUMBERS TO THE DEVICE ON PANEL ER6A, NOT SHOWN SEE REF 4 FOR WIRE NUMBERS TO THE DEVICE ON PANEL ER6B, NOT SHOWN SEE REF 5 FOR WIRE NUMBERS TO THE DEVICE ON PANEL ER2, NOT SHOWN SEE REF 6

REV	ZONE	DESCRIPTION
3		ECO C314846

NO.	DWG. NO.	TITLE
9	GE 8850706	CONTROL PANEL SERVICE PLTFORM
8	GE 706E212	ELEC ELEM DIAGRAM ROD BLOCK DISPLAY
7	GU 3E-611-17-010	ELEC ELEM DIAGRAM CONTROL PANEL 5F/6F ANNUN H
6	GE 719E201	CONNECTION DIAGRAM PANEL ER2
5	GE 719E215	CONNECTION DIAGRAM PANEL ER6B
4	GE 719E214	CONNECTION DIAGRAM PANEL ER6A
3	GE 112C2247	CONNECTION DIAGRAM PANEL 4F
2	GE 146F48*	CONTROL ROD DEVICE SYSTEM ELECTRICAL ELEMENTARY DIAGRAM
1	AOSC-0B212103-0 SH 2	SCHEMATIC ELEM DIAGRAM

REFERENCES

CAD FILE NAME GE 237E912 S3 R3
REVISION 0 OF THIS DRAWING WAS REDRAWN FROM GE 237E912 SH.1 REV.27
REVISION 2 OF THIS DRAWING WAS TRANSLATED TO AUTOCAD FROM CADAM FILE: V3E,628,17,0001,003-,0201

REGULATORY REQUIRED USE

THIS IS A COMPUTER GENERATED DRAWING DO NOT REVISE IT MANUALLY

GPU NUCLEAR

REACTOR MANUAL CONTROL SYS
ELECTRICAL ELEMENTARY DIAGRAM

DRAWN E.BRENNAN 3/22/00			
CHECKED 4/7/00			
REVIEWED 4/3/00			
CHECKED N/A			
ENGINEERING MANAGER N/A			

OYSTER CREEK | DWG. NO. GE 237E912 | SH. 3 | REV. 3
SCALE : NONE
WA.NO.

DWG.NO. GE 237E912 SH. 3

STICK#7

REVISIONS		
REV.	ZONE	DESCRIPTION
1	F7	FCM C101603

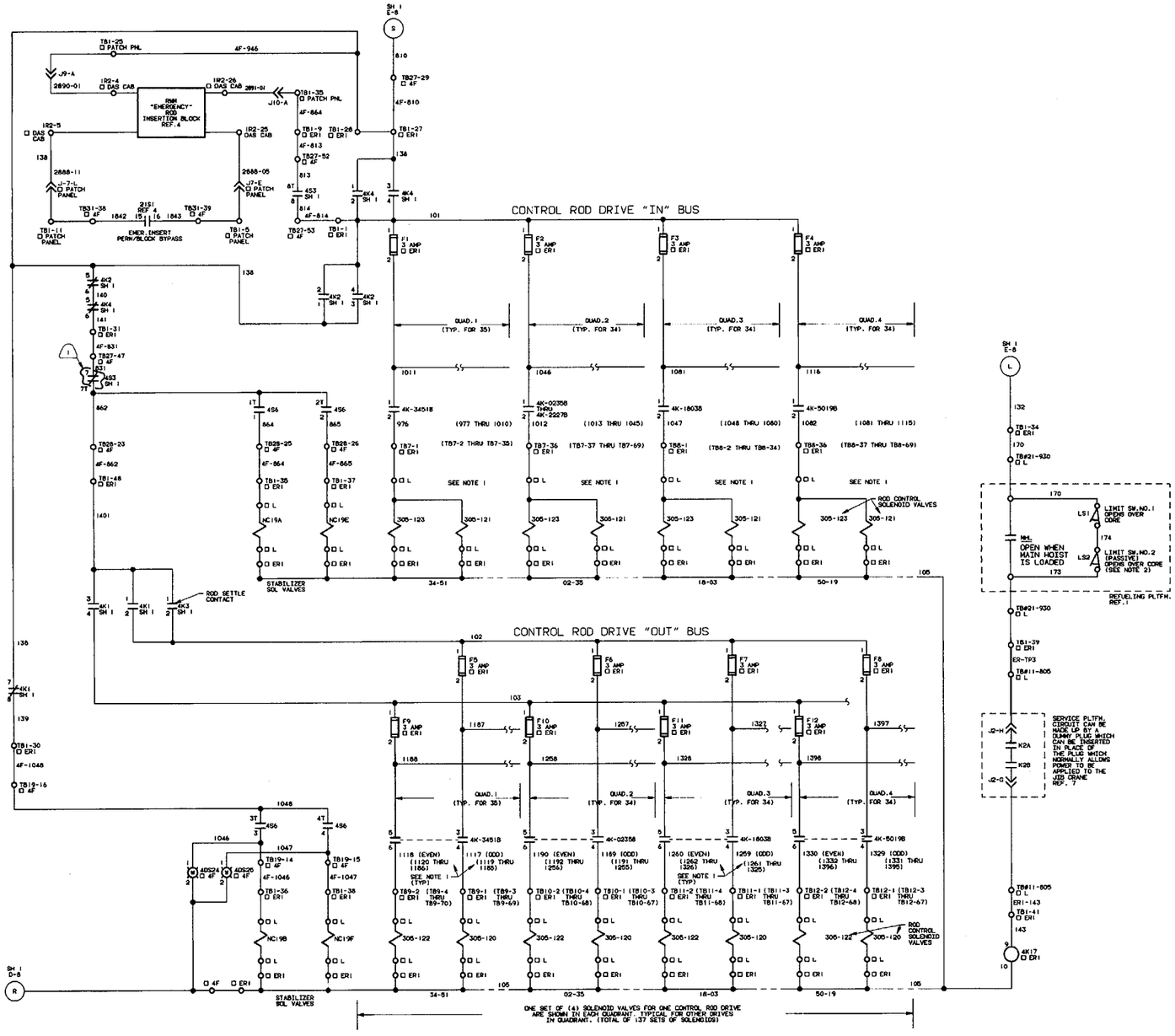

LEGEND:

- □ ERI - INDICATES DEVICE LOCATED IN PANEL ERI
- □ 4F - INDICATES DEVICE LOCATED IN PANEL 4F
- □ PATCH PANEL - INDICATES DEVICE LOCATED IN PATCH PANEL ER-653-089
- □ DAS CABINET - INDICATES DEVICE LOCATED IN DAS CABINET CP-653-002
- □ L - INDICATES LOCAL TERMINAL

NOTES:

1. FOR WIRE NUMBERS FOR DEVICES ON PANEL ERI NOT SHOWN
2. LS2 IS NORMALLY PASSIVE INSTALLED SPARE. ARM ROTATED OR REMOVED TO PREVENT OPERATION UNTIL NEEDED.

F.V.

4S6 □ 4F STABILIZER VALVE SELECTION SWITCH

CONTACTS	POSITIONS			FUNCTION
		E&F	A&B	
o|o o|o	1	X		INTLK NC19A
	2		X	INTLK NC19E
o|o o|o	3	X		INTLK NC19B
	4		X	INTLK NC19F

G.E. TYPE SBM MAINTAINED POSITIONS

1-2 REFUEL INTLKS SH 2
3-4 SPARE
5-6 SEL BLOCK SH 5
7-8 SPARE

4K17

NO.	DWG. NO.	TITLE
8	GE 112C3732	CONNECTION DIAGRAM PANEL ERI
7	GU 8880706	CONTROL PANEL SERVICE PLATFORM
6	GU 3E-653-18-1000	ROD WORTH MINIMIZER CONNECTION DIAGRAM DAS CAB CP-653-002
5	BR E0515	ROD WORTH MINIMIZER PATCH PANEL ER-653-089
4	GE 729E838	ELEMENTARY DIAGRAM RWM SYSTEM
3	GE 112C5247	CONNECTION DIAGRAM PANEL 4F
2	GE 237E698	ELECTRICAL CONNECTION DIAG PNL ERI
1	ADBC-06212103-D SH 13	SCHEMATIC ELEMENTARY DIAGRAM

REFERENCES

CAD FILE: V3E,628,17,00011,004-,0101
THIS IS A COMPUTER GENERATED DWG. DO NOT REVISE IT MANUALLY

REVISION 0 OF THIS DRAWING WAS REDRAWN FROM GE 237E912 SH 1 REV 27

REGULATORY REQUIRED
AS BUILT

MALLY DUDEK/ST 04/14/94

GPU Nuclear /GE

DRAWN: J.J. VIRGI 4-21-94
CHECKED: 4/26/94
DESIGN LEADER
ENGINEER: 4/28/94
MANAGER APPROVAL

REACTOR MANUAL CONT SYS
ELECTRICAL ELEMENTARY DIAGRAM

OYSTER CREEK | DWG. NO. GE 237E912 | SH. 4 | REV. 1
SCALE: NONE
ENG. MECH.
BA 326318
TASK

DWG. NO. GE 237E912 SH. 4

REVISIONS		
REV.	ZONE	DESCRIPTION
0	ALL	ADMINISTRATIVE REVISION

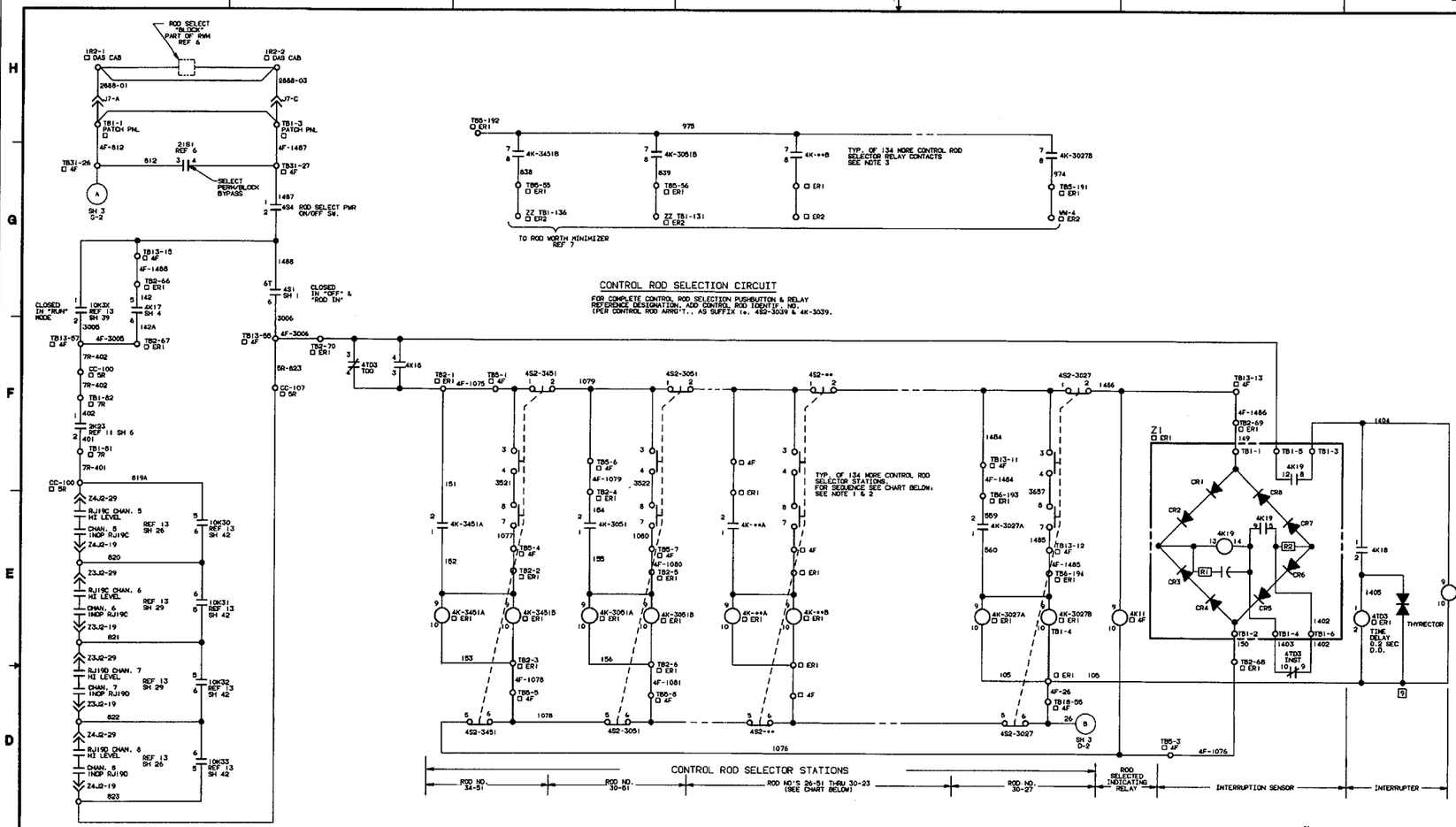

CONTROL ROD SELECTION CIRCUIT

FOR COMPLETE CONTROL ROD SELECTION PUSHBUTTON & RELAY REFERENCE DESIGNATION, ADD CONTROL ROD IDENTIF. NO. (PER CONTROL ROD ARRG'T., AS SUFFIX to. 452-3039 & 4K-3039.

CONTROL ROD SELECTOR STATIONS

LEGEND:

- ☐ ERI - INDICATES DEVICE LOCATED IN PANEL ERI
- ☐ 4F - INDICATES DEVICE LOCATED IN PANEL 4F
- ☐ ER2 - INDICATES DEVICE LOCATED IN PANEL ER2
- ☐ 5R - INDICATES DEVICE LOCATED IN PANEL 5R
- ☐ 7R - INDICATES DEVICE LOCATED IN PANEL 7R
- ☐ DAS CAB - INDICATES DEVICE LOCATED IN DAS CABNET CP-653-002
- ☐ PATCH PNL. - INDICATES DEVICE LOCATED IN PATCH PANEL ER-653-089
- ** - ADD CONTROL ROD I.D. NO.

NOTES:

1. FOR WIRE NUMBERS TO DEVICES ON PNL ERI NOT SHOWN, SEE REF 2
2. FOR WIRE NUMBERS TO DEVICES ON 4F NOT SHOWN SEE REF 5 & 8

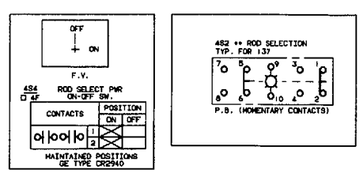

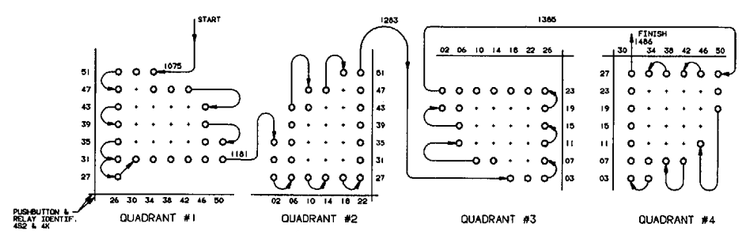

CHART SHOWING SEQUENCE OF CONT. ROD SELECTOR STATIONS IN CONT. ROD SELECTION CIRCUITS ABOVE

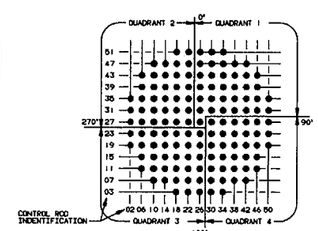

COTROL ROD ARRGT. PLAN VIEW

1/2 SEAL IN	1/2 POWER TO 305-121 & 305-123 SH 4	1/2 SEAL IN	1/2 POWER TO 305-121 & 305-123 SH 4
3/4 CONTROL ROD SELECT INDICATING LT 452-3451 SH 6	3/4 POWER TO 305-120 SH 4	3/4 CONTROL ROD SELECT INDICATING LT 452-3061 SH 6	3/4 POWER TO 305-120 SH 4
5/6 ROD DRIFT ANN BYPASS REF 14 SH 2	5/6 POWER TO 305-122 SH 4	5/6 ROD DRIFT ANN BYPASS REF 14 SH 2	5/6 POWER TO 305-122 SH 4
7/8 SPARE	7/8 INTLK 20K201 REF 7	7/8 SPARE	7/8 INTLK 20K200 REF 7
4K-3451A	4K-3451B	4K-3061A	4K-3061B

1/2 SEAL IN	1/2 POWER TO 305-121 & 305-123 SH 4	1/2 SEAL IN	1/2 POWER TO 305-121 & 305-123 SH 4	1/2 INTLK 4TD3	1/2 INTLK 4K9 ONE ROD FREE MOV SH 3
3/4 CONTROL ROD SELECT INDICATING LT 452-** SH 6/7	3/4 POWER TO 305-120 SH 4	3/4 CONTROL ROD SELECT INDICATING LT 452-3027 SH 7	3/4 POWER TO 305-120 SH 4	3/4 INTLK CONTROL ROD SELECTOR STATIONS	3/4 SPARE
5/6 ROD DRIFT ANN BYPASS REF 14 SH 2	5/6 POWER TO 305-122 SH 4	5/6 ROD DRIFT ANN BYPASS REF 14 SH 2	5/6 POWER TO 305-122 SH 4	5/6 SPARE	5/6 SPARE
7/8 SPARE	7/8 INTLK 20KXX REF 7	7/8 SPARE	7/8 INTLK 20K104 REF 7	7/8 SPARE	7/8 SPARE
4K-**A	4K-**B	4K-3027A	4K-3027B	4K18	4K11

3/4 A INTLK CONTROL ROD SELECTOR STATIONS
9/10 A TO INTERRUP SENSOR REF 10
4T03

NO.	DWG. NO.	TITLE
14	GE 148F481	CONTROL ROD DRIVE SYSTEM ELECTRICAL ELEMENTARY DIAGRAM
13	GE 706E812	NEUTRON MONITORING SYSTEM ELEMENTARY DIAGRAM
12	GE 719E201	CONNECTION DIAGRAM PANEL ER2
11	GE 237E566	REACTOR PROTECTION SYS ELEM
10	GU 3E-653-18-1000	CONNECTION DIAGRAM DAS CABINET CP-653-002
9	GE 112C3658	ELEM DIAGRAM INTERUPTION MONITOR
8	GE 237E698	ELECT CONNECTION DIAGRAM PANEL ERI
7	GE 719E417	ELEMENTARY DIAGRAM RWM INPUT BUFFER
6	GE 729E638	ELEMENTARY DIAGRAM RWM SYSTEM
5	GE 112C2247	CONNECTION DIAGRAM PANEL 4F
4	GE 112C2264	CONNECTION DIAGRAM PANEL 7R
3	GE 237E690	CONNECTION DIAGRAM PANEL 5R
2	GE 112C3732	CONNECTION DIAGRAM PANEL ERI
1	BH E0516	CONNECTION DIAGRAM PATCH PANEL ER-653-089

REFERENCES

CAD FILE: V3E.628.17.0001.005-.0001
THIS IS A COMPUTER GENERATED DWG. DO NOT REVISE IT MANUALLY

REVISION 0 OF THIS DRAWING WAS REDRAWN FROM GE 237E912 SH 1 REV 27 AND GE 112C3658 REV 3

REGULATORY REQUIRED
AS BUILT

PERRY/BV	7/20/93	GPU Nuclear /GE
DRAWN	DATE	REACTOR MANUAL CONTROL SYS
CHECKED	DATE	ELECTRICAL ELEMENTARY DIAGRAM
DESIGN LEADER	DATE	
ENGINEER	DATE	OYSTER CREEK — DWG. NO. GE 237E912 — SH. 5 — REV. 0
MANAGER APPROVAL	DATE	SCALE: NONE
ENG.MECH.		BA 326318 — TASK

DWG NO. GE 237E912 SH. 5

COMMENTS: ERRATA: NONE. REFERENCED: NONE. SCALE: 1.000 DRAWN:PERRY:TOOL100:RM-001 LAST FILE:PERT3 14:53 ERRATA: NONE. LAST: 5-5-2007 USER: 5-5-2007

REVISIONS		
REV	ZONE	DESCRIPTION
2		ECO C314846

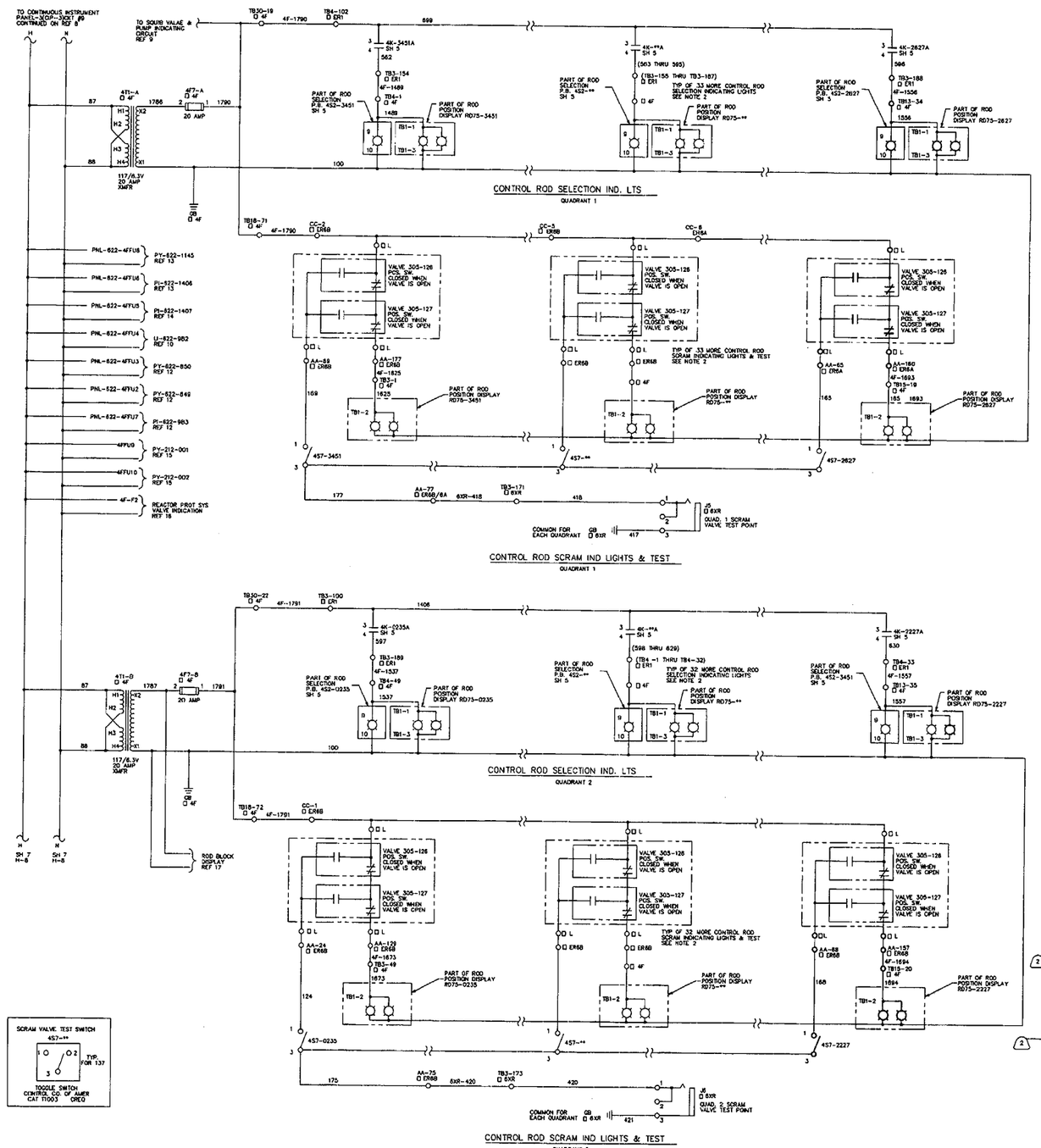

LEGEND:

- ☐ ER1 – INDICATES DEVICE, LOCATED IN PANEL ER1
- ☐ 4F – INDICATES DEVICE, LOCATED IN PANEL 4F
- ☐ ER8A – INDICATES DEVICE, LOCATED IN PANEL ER8A
- ☐ ER8B – INDICATES DEVICE, LOCATED IN PANEL ER8B
- ☐ 6XR – INDICATES DEVICE, LOCATED IN PANEL 6XR
- ** – ADD CONTROL ROD I.D. NO.
- ☐ L – LOCAL TERMINAL

NOTES:

1. PANEL ER8 IS COMPOSED OF TWO PANELS ER8A & ER8B. ACTUAL LOCATIONS OF MONITORS OR ER5A & ER8B TO BE DETERMINED BY DWG.GE 706E201
2. FOR WIRE NUMBERS TO DEVICES ON ER8A SEE CONN DIAG REF 4
   FOR WIRE NUMBERS TO DEVICES ON ER8B SEE CONN DIAG REF 5
   FOR WIRE NUMBERS TO DEVICES ON 4F SEE CONN DIAG REF 3
   FOR WIRE NUMBERS TO DEVICES ON ER1, SEE CONN DIAG REF 2 & 7

NO.	DWG. NO.	TITLE
17	GE 706E212 SH 1	CORE MONITORING SYSTEM ELEC ELEMENTARY DIAGRAM
16	GE 237E566 SH 10	REACTOR PROTECTION SYSTEM ELEC ELEMENTARY DIAGRAM
15	GE 148F912 SH 1	ELEMENTARY DIAGRAM PROCESS INSTRUMENTATION
14	SH 1508102-ETLD-007	REACTOR PROTECTION SYSTEM ELEMENTARY CORE COOLING SYSTEM
13	SH 1508102-ETLD-006	REACTOR PROTECTION SYSTEM ELEMENTARY CORE COOLING SYSTEM
12	SH 1508102-ETLD-005	REACTOR PROTECTION SYSTEM ELEMENTARY CORE COOLING SYSTEM
11	SH 1508102-ETLD-002	REACTOR PROTECTION SYSTEM ELEMENTARY CORE COOLING SYSTEM
10	SH 1508102-ETLD-001	REACTOR PROTECTION SYSTEM ELEMENTARY CORE COOLING SYSTEM
9	GE 157M4330 SHEETS 188 & 189	LIQUID POISON SYSTEM ELEMENTARY DIAGRAM
8	GE 706E812 SH 3	NEUTRON MONITORING SYSTEM ELEC ELEMENTARY DIAGRAM
7	GE 112C3732	CONNECTION DIAGRAM PANEL ER1
6	GE 112C2238	CONNECTION DIAGRAM PANEL 6XR
5	GE 719E215	CONNECTION DIAGRAM PANEL ER8B
4	GE 719E214	CONNECTION DIAGRAM PANEL ER8A
3	GE 112C2247	CONNECTION DIAGRAM PANEL 4F
2	GE 237E598	ELEC CONN DIAG PANEL ER1
1	GE 12B92752	CONNECTION DIAGRAM HYDRAULIC CONTROL UNIT

REFERENCES

CAD FILE NAME: GE 237E912 S6 R2

REVISION 0 OF THIS DRAWING WAS REDRAWN FROM GE 237E912 SH 1 REV 27
REVISION 1 OF THIS DRAWING WAS TRANSLATED TO AUTOCAD FROM CADAM FILE: V3E.028.17.0001.006-.0101

REGULATORY REQUIRED USE

THIS IS A COMPUTER GENERATED DRAWING DO NOT REVISE IT MANUALLY

DRAWN	E.BRENNAN	2/04/00
DESIGN ENGINEER		4/7/00
PROJECT ENGINEER		4/7/00
CHEMISTRY	N/A	
RADIOLOGICAL CONTROL	N/A	

GPU NUCLEAR

REACTOR MANUAL CONTROL SYS
ELECTRICAL ELEMENTARY DIAGRAM

OYSTER CREEK | DWG. NO. GE 237E912 | SH. 6 | REV. 2 | SCALE : NONE | W.A.NO.

PROJ. NO. GE 237E912 SH. 6

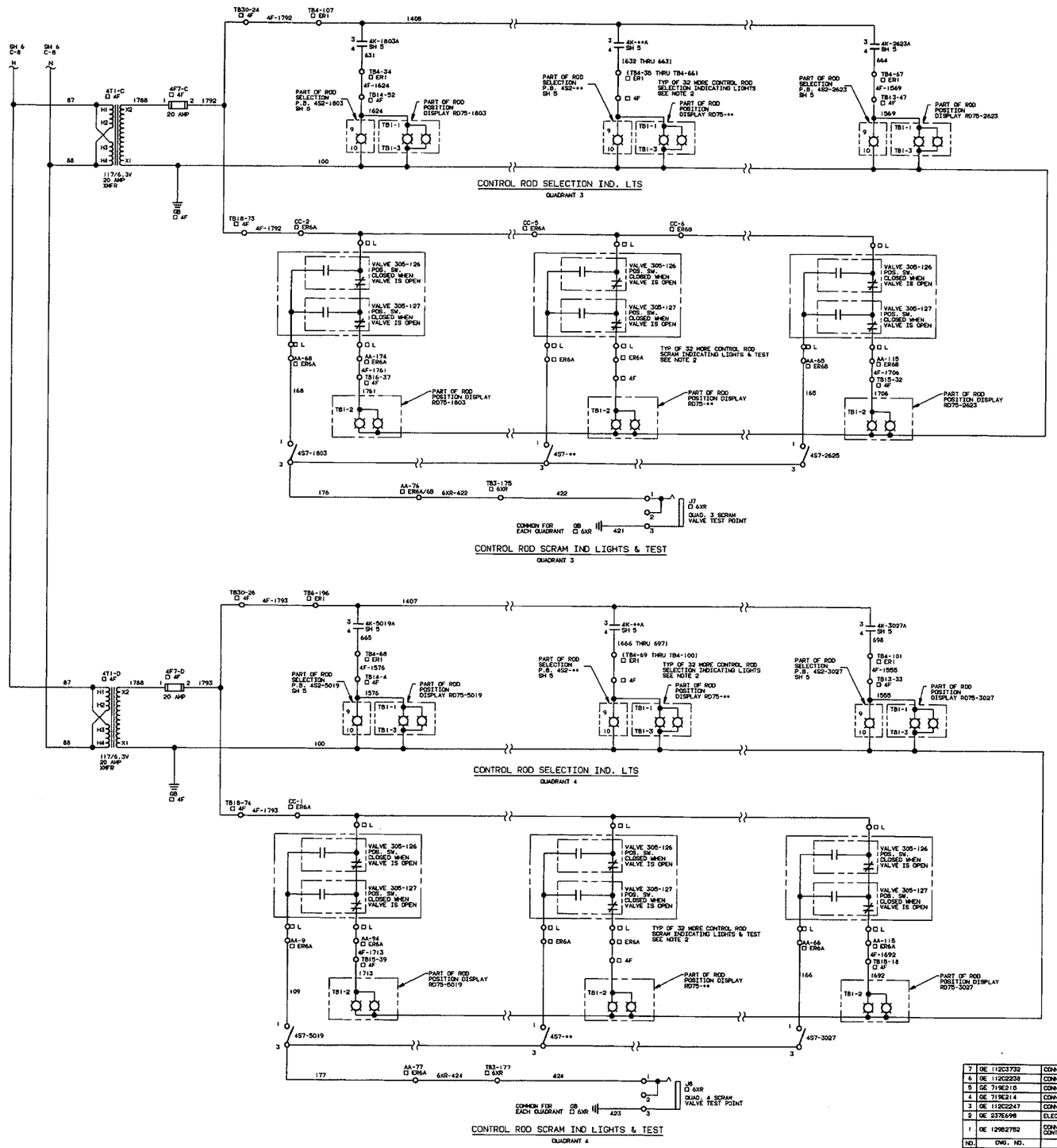

REVISIONS		
REV.	ZONE	DESCRIPTION
0	ALL	ADMINISTRATIVE REVISION

LEGEND:

- ☐ ER1 - INDICATES DEVICE, LOCATED IN PANEL ER1
- ☐ 4F - INDICATES DEVICE, LOCATED IN PANEL 4F
- ☐ ER6A - INDICATES DEVICE, LOCATED IN PANEL ER6A
- ☐ ER6B - INDICATES DEVICE, LOCATED IN PANEL ER6B
- ☐ 6XR - INDICATES DEVICE, LOCATED IN PANEL 6XR
- ** - ADD CONTROL ROD I.D. NO.
- ☐ L - LOCAL TERMINAL

NOTES:

1. PANEL ER6 IS COMPOSED OF TWO PANELS ER6A & ER6B, ACTUAL LOCATIONS OF MONITORS OR ER6A & ER6B TO BE DETERMINED BY DWG.GE 706E201
2. FOR WIRE NUMBERS TO DEVICES ON ER6A SEE CONN DIAG REF 4
   FOR WIRE NUMBERS TO DEVICES ON ER6B SEE CONN DIAG REF 5
   FOR WIRE NUMBERS TO DEVICES ON 4F, SEE CONN DIAG REF 3
   FOR WIRE NUMBERS TO DEVICES ON ER1, SEE CONN DIAG REF 2 & 7

CAD FILE: V3E,628,17,0001,007-,0001

THIS IS A COMPUTER GENERATED DWG. DO NOT REVISE IT MANUALLY

REVISION 0 OF THIS DRAWING WAS REDRAWN FROM GE 237E912 SH 1 REV 27

REGULATORY REQUIRED
AS BUILT

NO.	DWG. NO.	TITLE
7	GE 112C3732	CONNECTION DIAGRAM PANEL ER1
6	GE 112C2238	CONNECTION DIAGRAM PANEL 6XR
5	GE 719E215	CONNECTION DIAGRAM PANEL ER6B
4	GE 719E214	CONNECTION DIAGRAM PANEL ER6A
3	GE 112C2247	CONNECTION DIAGRAM PANEL 4F
2	GE 237E698	ELEC CONN DIAG PANEL ER1
1	GE 12982752	CONNECTION DIAGRAM HYDRAULIC CONTROL UNIT

REFERENCES

PERRY/BV 7/20/93

DRAWN M.G. Asch DATE 10/5/93
CHECKED J. Jahn DATE 10/5/93
DESIGN LEADER DATE
ENGINEER DATE
MANAGER APPROVAL DATE
ENG.MECH.

GPU Nuclear /GE

REACTOR MANUAL CONTROL SYS
ELECTRICAL ELEMENTARY DIAGRAM

OYSTER CREEK

DWG. NO. GE 237E912 SH. 7 REV. 0

SCALE: NONE

BA 326318 TASK

DWG. NO. GE 237E912 SH. 7

REVISIONS		
REV.	ZONE	DESCRIPTION
3	—	1 ECO C208210 2 ECO C208590

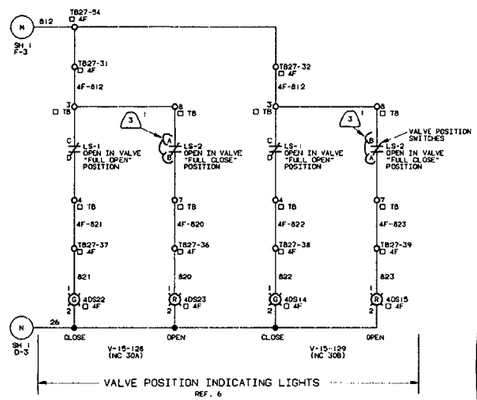

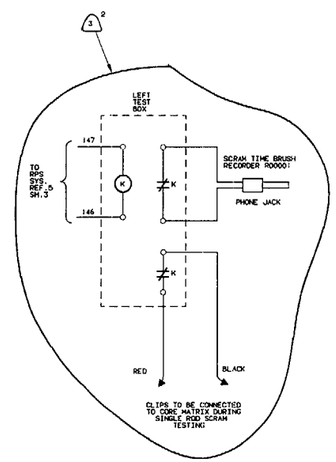

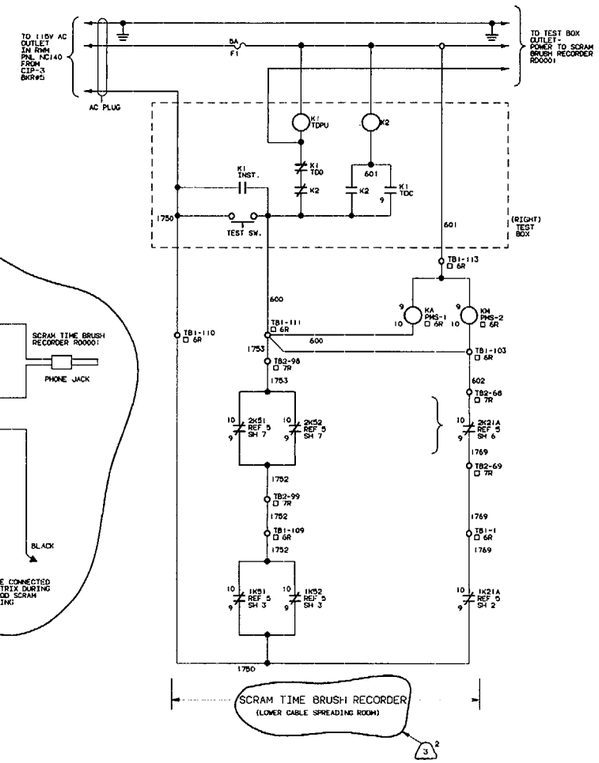

LEGEND:

- □ 4F - INDICATES DEVICE, LOCATED IN PANEL 4F
- □ ER4 - INDICATES DEVICE, LOCATED IN PANEL 7R
- □ 6R - INDICATES DEVICE, LOCATED IN PANEL 6R
- □ 7R - INDICATES DEVICE, LOCATED IN PANEL 7R
- □ TB - INDICATES TERMINAL LOCATED IN VALVE CONNECTION BOX

NOTES:

SEE VM-OC-5187 FOR RD0001 DETAIL

TYP LIMIT SWITCH CONTACT DEV					
LEGEND			VALVE POSITION		
			FULL OPEN	INTERMEDIATE	FULL CLOSED
OPEN LIMIT SWITCH	LS-2	20-O			
		20-IC			
CLOSE LIMIT SWITCH	LS-1	20-C			
		20-IO			

LIMIT SWITCH DEVELOPMENT DOES NOT SHOW THE ACTUAL NUMBER OF SWITCH CONTACTS (SHOWN FOR CONTACT OPERATION ONLY)

F.V.
CRD FLOW CONTROL VALVE SELECT
4S14
□ 4F

CONTACTS	POSITIONS B	POSITIONS A	FUNCTION
1		X	V-15-128 & RD51 (REF 6)
2	X		V-15-129 & RD51 (REF 6)
3		X	V-15-128 & RD51 (REF 6)
4	X		V-15-129 & RD51 (REF 6)

MAINTAINED POSITIONS
G.E. TYPE CR2940

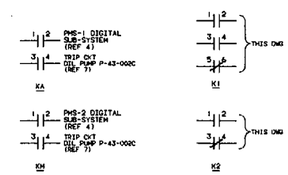

CAD FILE: V3E.628.17.0001.008-.0301
THIS IS A COMPUTER GENERATED DWG. DO NOT REVISE IT MANUALLY

REVISION 0 OF THIS DRAWING WAS RECRAWN FROM GE 237E912 SH 2 REV 15

REGULATORY REQUIRED USE

NO.	DWG. NO.	TITLE
7	GE 223R0287 SH 4	ELEC ELEM DIAGRAM 4160V OIL PLANT SWGR UNIT 3
6	GE 148F912 SH 3	ELEM DIAG PROCESS INSTRUMENTATION
5	GE 237E566	REACTOR PROTECTION SYS ELEM DIAGRAM
4	GE 112C2265	CONNECTION DIAGRAM PANEL 6R
3	GE 112C2264	CONNECTION DIAGRAM PANEL 7R
2	GE 112C2247	CONNECTION DIAGRAM PANEL 4F
1	BR 3041 SH 7	ELEC CONNECTION DIAGRAM MISC REACTOR BLDG TERMINAL BOX

REFERENCES

BRENNAN	5/12/97	DATE
DRAWN		DATE
CHECKED	5/16/97	DATE
DESIGN LEADER	N/A	DATE
ENGINEER		DATE
MANAGER APPROVAL		DATE

GPU NUCLEAR /GE

REACTOR MANUAL CONTROL SYS
ELECTRICAL ELEMENTARY DIAGRAM

OYSTER CREEK | DWG. NO. GE 237E912 | SH. 8 | REV. 3
SCALE: NONE

ENG.MECH. | BA 326318 | M.O.

DWG.NO. GE 237E912 SH. 8

STICK#7

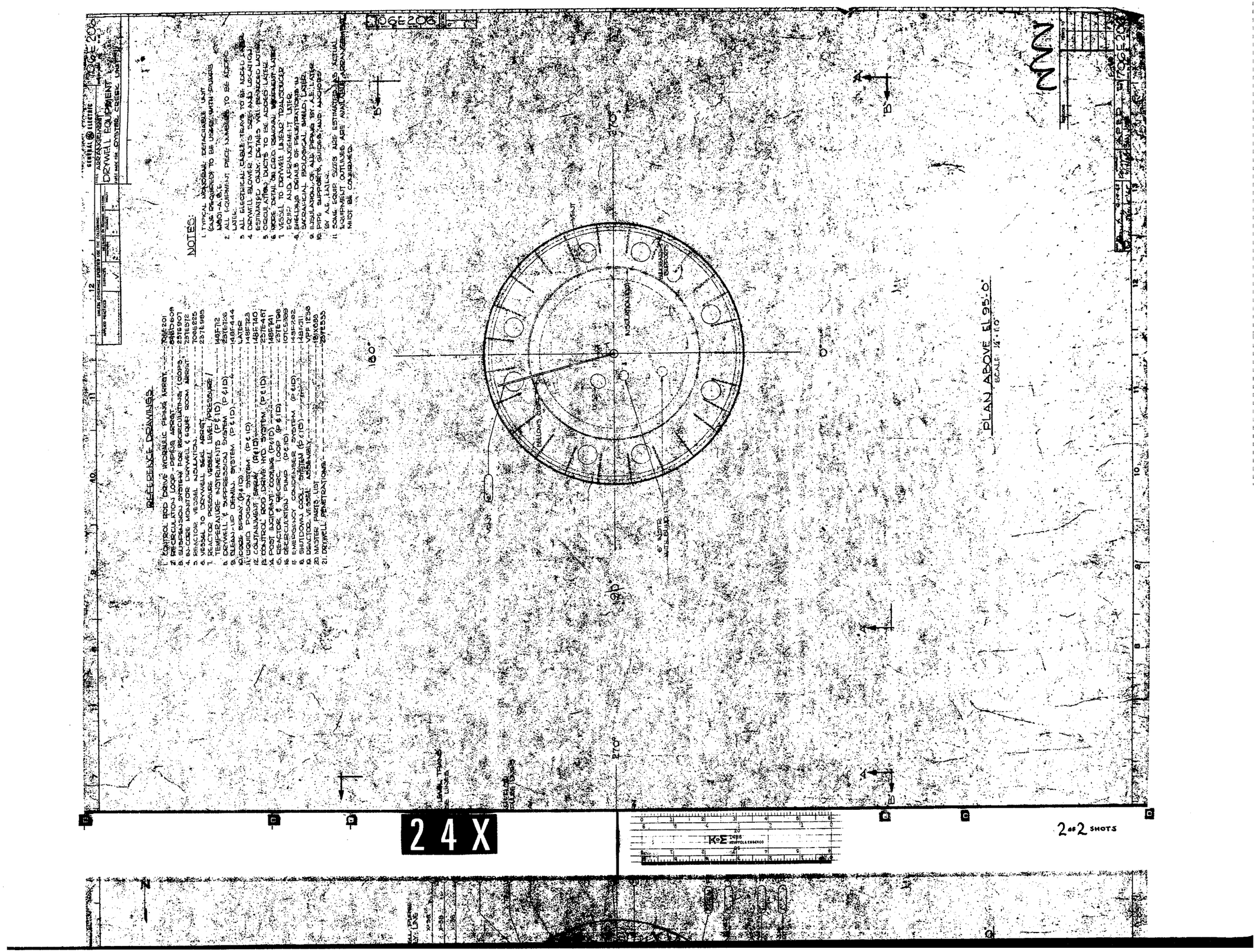

GENERAL ELECTRIC
ARRANGEMENT
DRYWELL EQUIPMENT
OYSTER CREEK UNIT
706E206
NOTES:
1. TYPICAL MONORAIL DETACHABLE UNIT (ONE REQUIRED) TO BE USED WITH PUMPS M801-A,B,C.
2. ALL EQUIPMENT PIECE NUMBERS TO BE ADDED LATER.
3. ALL ELECTRICAL CABLE TRAYS TO BE ADDED LATER.
4. DRYWELL BLOWER UNITS SIZE AND LOCATION ESTIMATED ONLY. DETAILS WILL BE ADDED LATER.
5. CIRCULATION DUCTS TO BE ADDED LATER.
6. MORE DETAIL ON CRD REMOVAL EQUIPMENT LATER.
7. VESSEL TO DRYWELL LINEAR TRANSDUCER EQUIP AND ARRANGEMENT LATER.
8. SHIELDING DETAILS OF PENETRATIONS IN SACRAFICIAL BIOLOGICAL SHIELD LATER.
9. INSULATION OF ALL PIPING BY A.E. LATER.
10. PIPE SUPPORTS, GUIDES AND ANCHORS BY A.E. LATER.
11. SOME EQUIP SIZES ARE ESTIMATED AS ACTUAL EQUIPMENT OUTLINES ARE AVAILABLE ARRANGEMENT MUST BE CONFIRMED.
REFERENCE DRAWINGS
1. CONTROL ROD DRIVE HYDRAULIC PIPING ARRGT. 706E201
2. RECIRCULATION LOOP - PIPING ARRGT. 25TE609
3. SUSPENSION SYSTEM FOR RECIRCULATING LOOPS 25TE907
4. IN-CORE MONITOR DRYWELL & EQUIP ROOM ARRGT. 23TE972
5. REACTOR VESSEL INSULATION 706E225
6. VESSEL TO DRYWELL SEAL ARRGT. 23TE985
7. REACTOR PRESSURE VESSEL LEVEL/PRESSURE/TEMPERATURE INSTRUMENTS (P&ID) 148F712
8. DRYWELL & SUPPRESSION SYSTEM (P&ID) 23TE726
9. CLEAN-UP DEMIN. SYSTEM (P&ID) 148F444
10. CORE SPRAY (P&ID) LATER
11. LIQUID POISON SYSTEM (P&ID) 148F723
12. CONTAINMENT SPRAY (P&ID) 148F740
13. CONTROL ROD DRIVE HYD. SYSTEM (P&ID) 23TE487
14. POST INCIDENT COOLING (P&ID) 148F741
15. REACTOR & RECIRC. LOOP (P&ID) 23TE798
16. RECIRCULATION PUMP (P&ID) 107C5399
17. EMERGENCY CONDENSER SYSTEM (P&ID) 148F202
18. SHUTDOWN COOL SYSTEM (P&ID) 148F211
19. REACTOR VESSEL ASSEMBLY VPF 1230
20. MASTER PARTS LIST 181X688
21. DRYWELL PENETRATIONS 23TE533
PLAN ABOVE EL 95'-0"
SCALE: 1/4" = 1'-0"
180°
270°
0°
90°
24X
2 of 2 SHOTS

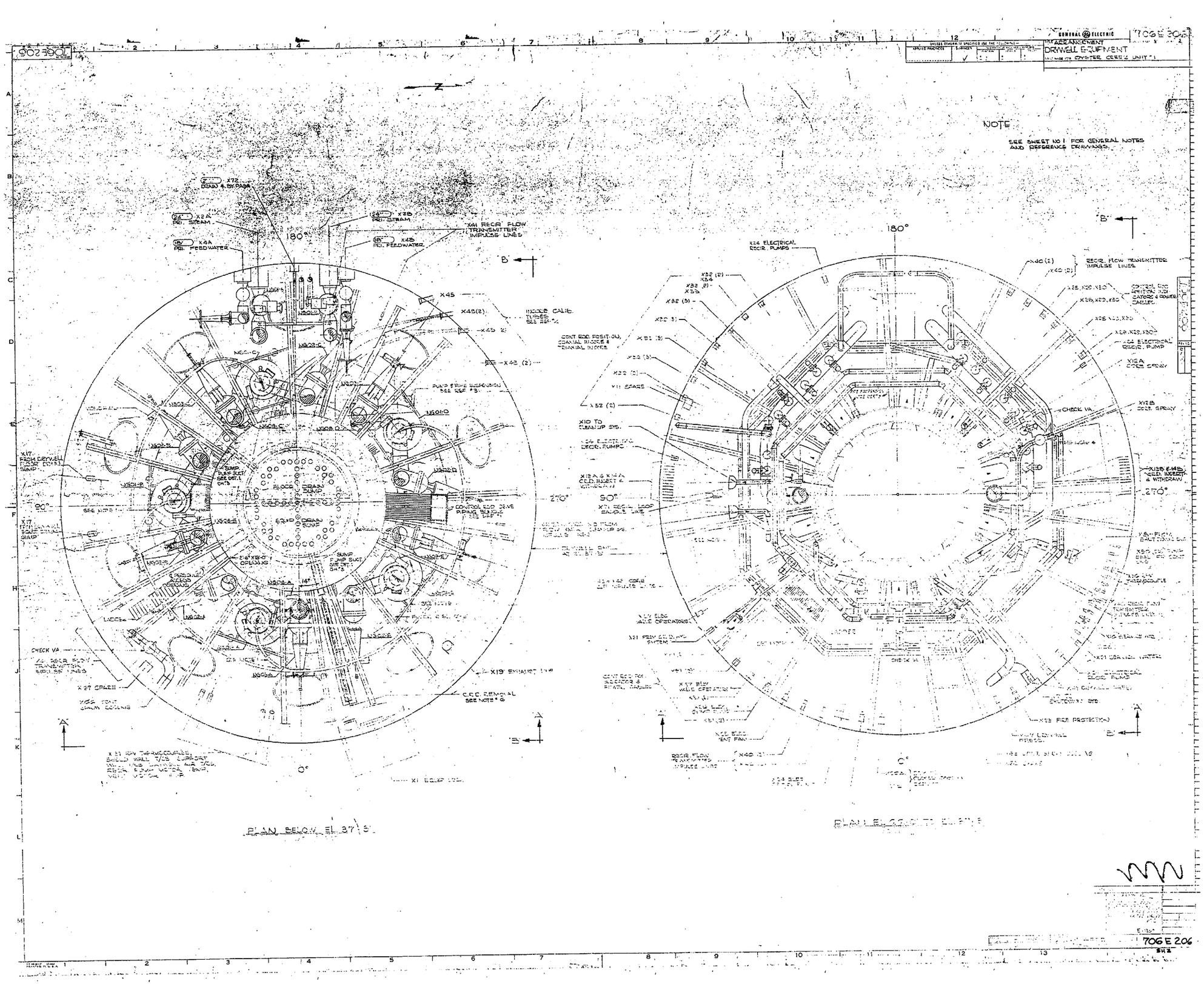
GENERAL ELECTRIC
706E206
ARRANGEMENT
DRYWELL EQUIPMENT
OYSTER CREEK UNIT 1
NOTE
SEE SHEET NO 1 FOR GENERAL NOTES AND REFERENCE DRAWINGS.
X72 DRAIN & BY-PASS
X2A PRI. STEAM
X4A PRI. FEEDWATER
X2B PRI. STEAM
X4B PRI. FEEDWATER
X41 RECIR. FLOW TRANSMITTER IMPULSE LINES
X45
X45(2)
X43 (2)
INCORE CALIB. TUBES
X17 FROM DRYWELL FLOOR DRAIN SUMP
FLOOR DRAIN SUMP
EQUIP DRAIN SUMP
CONTROL ROD DRIVE PIPING BUNDLE
X19 EXHAUST LINE
C.R.D. REMOVAL SEE NOTE # 6
X27 SPARE
CHECK VA
X24 ELECTRICAL RECIR. PUMPS
X40 (2)
RECIR. FLOW TRANSMITTER IMPULSE LINES
X12A CORE SPRAY
X12B CORE SPRAY
X10 TO CLEANUP SYS.
X11 SPARE
X52 (2)
X71 RECIR. LOOP SAMPLE LINE
X21 ELECTRICAL RECIR. PUMP
X21 SERVICE WATER
X25 FIRE PROTECTION
180°
90°
270°
0°
PLAN BELOW EL 37'-5"
706E206

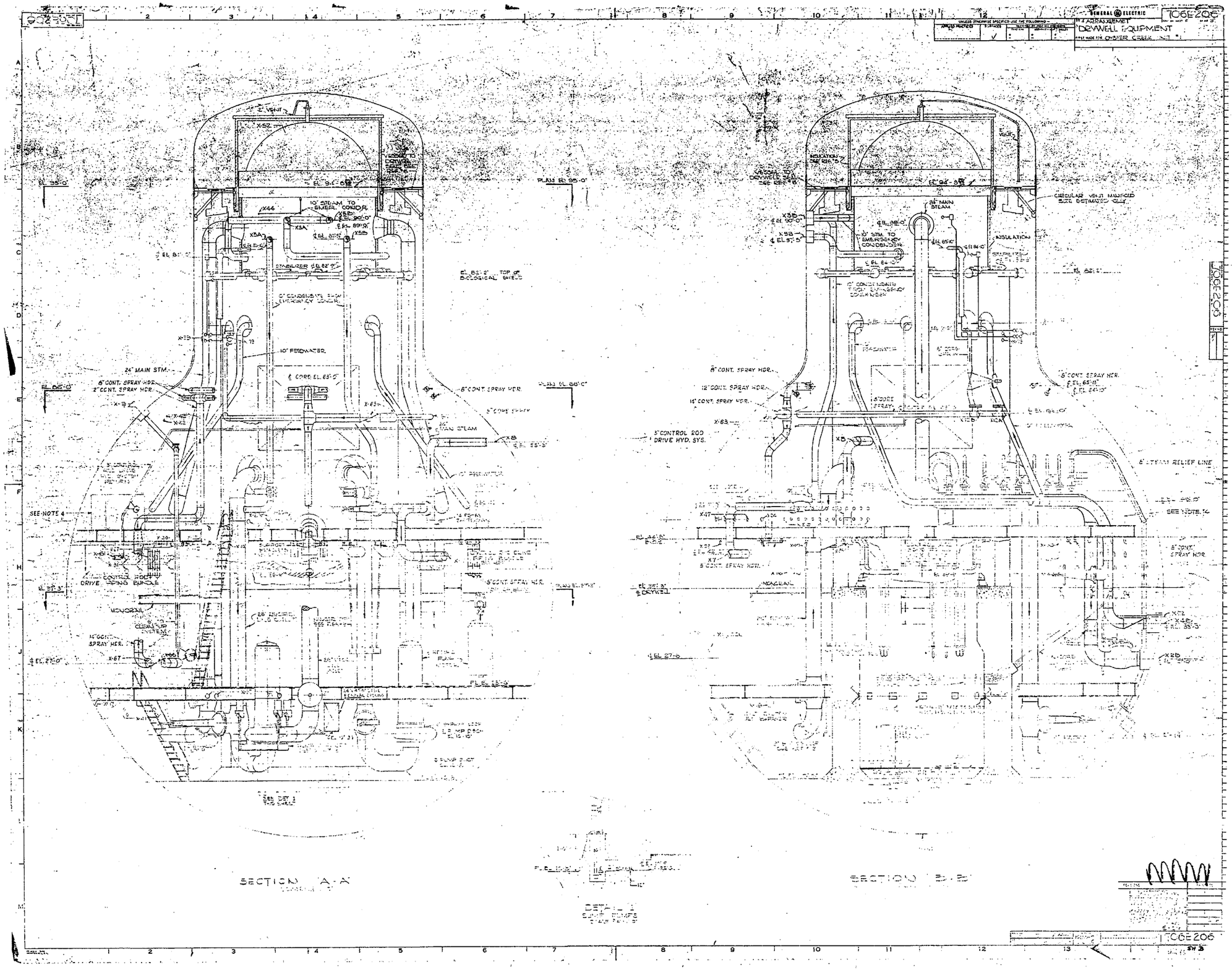
GENERAL ELECTRIC
706E206
ARRANGEMENT
DRYWELL EQUIPMENT
FIRST MADE FOR OYSTER CREEK UNIT #1
SECTION A-A
SECTION B-B
DETAIL 1
SEE NOTE 4
24" MAIN STM.
10" FEEDWATER
8" CONT. SPRAY HDR.
12" CONT. SPRAY HDR.
14" CONT. SPRAY HDR.
8" STEAM RELIEF LINE
CIRCULAR VENT MANIFOLD SIZE ESTIMATED ONLY
INSULATION
MONORAIL
CONTROL ROD DRIVE PIPING BUNDLE
10" STEAM TO EMER. CONDR.
EL. 82'-2" TOP OF BIOLOGICAL SHIELD
PLAN EL. 95'-0"
PLAN EL. 88'-0"
706E206

REVISIONS		
REV	ZONE	DESCRIPTION
18		ECO C402987

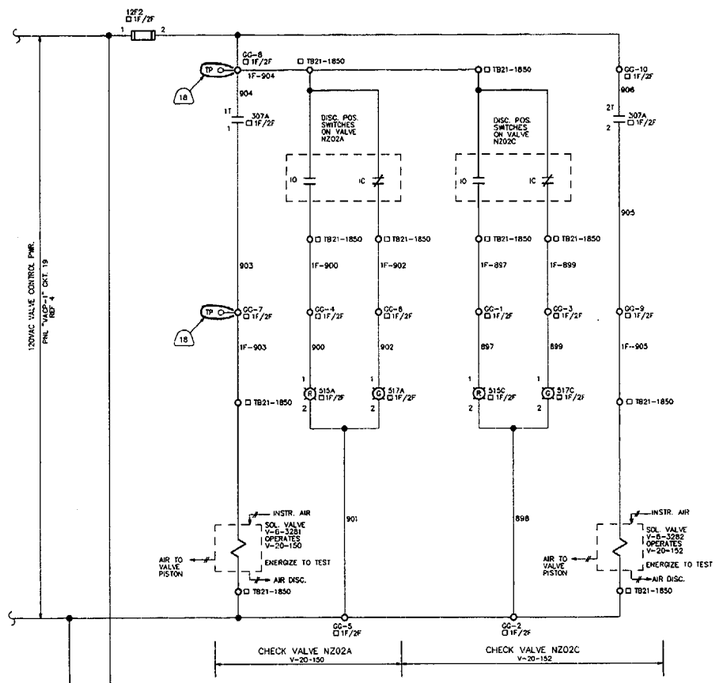

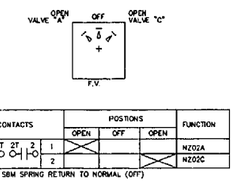

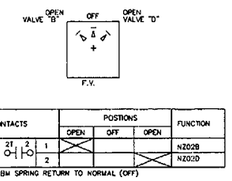

LEGEND:

- □ 1F/2F – INDICATES DEVICE LOCATED IN CONTROL PANEL 1F/2F
- □ TB21-1850 – INDICATES TERMINAL BOX 21-1850
- □ TB21-1855 – INDICATES TERMINAL BOX 21-1855
- POS – C: VALVE LIMIT SWITCH CLOSED WHEN VALVE FULLY CLOSED
- POS – O: VALVE LIMIT SWITCH CLOSED WHEN VALVE FULLY OPEN
- POS – IC: VALVE LIMIT SWITCH CLOSED WHEN VALVE NOT FULLY OPEN
- POS – IO: VALVE LIMIT SWITCH CLOSED WHEN VALVE NOT FULLY CLOSED
- TP O— – INDICATES HEX HD SETSCREW TEST POINT

NOTES:

1. GE 718E644 SH 1 OF 2 HAS BEEN REPLACED BY NU 5060E6003

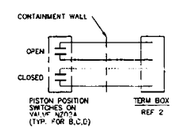

TYP LIMIT SWITCH CONTACT DEV				
LEGEND		VALVE POSITION		
		FULL OPEN	INTERMEDIATE	FULL CLOSED
OPEN LIMIT SWITCH	O			
	IC			
CLOSE LIMIT SWITCH	C			
	IO			

LIMIT SWITCH DEVELOPMENT DOES NOT SHOW THE ACTUAL NUMBER OF SWITCH CONTACTS (SHOWN FOR CONTACT OPERATION ONLY)

REFERENCES		
NO.	DWG. NO.	TITLE
4	GU 3C-733-11-004	PANEL SCHEDULE VITAL AC POWER PANEL VACP-1
3	BR 3044 SH 1	MISC. CONNECTION DIAGRAMS
2	BR 3043 SH 1	MISC. CONNECTION DIAGRAMS SH #3
1	GE 719E211 SH 2, 3, 4, 7, 11	ELEC CONNECTION DIAGRAM PANEL 1F/2F

CAD FILE NAME: GE 718E644 S2 R18

REVISION 15 OF THIS DRAWING WAS REDRAWN FROM GE 718E644 SH. 2, REV. 14 AND BR 3032 REV 23. (VALVES V-20-0017 AND V-20-0023 INDICATION SHOWN ON BR 3020 SH.2)
REVISION 16 OF THIS DRAWING WAS TRANSLATED TO AUTOCAD FROM CADAM FILE VOE.212.17.0030.002-.1601

NUCLEAR SAFETY RELATED USE

THIS IS A COMPUTER GENERATED DRAWING DO NOT REVISE IT MANUALLY

AmerGen

DRAWN	E.J.MCKEE	02/15/2001
CHECKED		
ENGINEERING		
CHANGE	N/A	
DRAWING INDEX	N/A	

CORE SPRAY SYSTEM
ELECTRICAL ELEMENTARY DIAGRAM
CORE SPRAY CONTROL

OYSTER CREEK | DWG. NO. GE 718E644 | SH. 2 | REV 18
SCALE : NONE
W.A. NO.

STICK#7

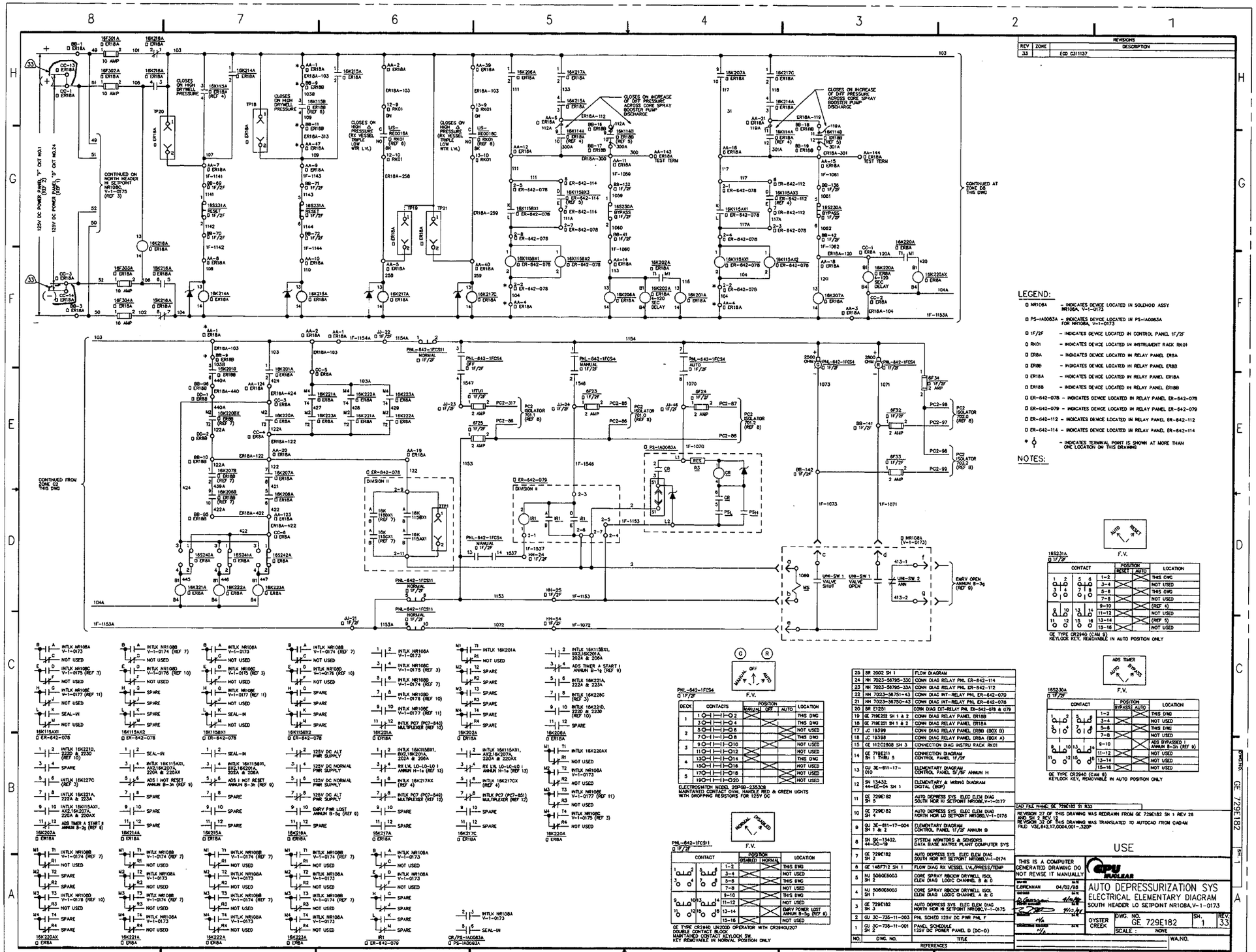
REVISIONS
REV ZONE DESCRIPTION
33 ECO C311137
CONTINUED ON NORTH HEADER HI SETPOINT NR108A, V-1-0175 (REF 3)
CONTINUED FROM ZONE C2 THIS DWG
CONTINUED AT ZONE D6 THIS DWG
CLOSES ON HIGH DRYWELL PRESSURE
CLOSES ON INCREASE OF DIFF PRESSURE ACROSS CORE SPRAY BOOSTER PUMP DISCHARGE
ENRV OPEN ANNUN B-3a (REF 9)
LEGEND:
NR108A - INDICATES DEVICE LOCATED IN SOLENOID ASSY NR108A, V-1-0173
PS-1A0083A - INDICATES DEVICE LOCATED IN PS-1A0083A FOR NR108A, V-1-0173
1F/2F - INDICATES DEVICE LOCATED IN CONTROL PANEL 1F/2F
RK01 - INDICATES DEVICE LOCATED IN INSTRUMENT RACK RK01
ER8A - INDICATES DEVICE LOCATED IN RELAY PANEL ER8A
ER8B - INDICATES DEVICE LOCATED IN RELAY PANEL ER8B
ER18A - INDICATES DEVICE LOCATED IN RELAY PANEL ER18A
ER18B - INDICATES DEVICE LOCATED IN RELAY PANEL ER18B
ER-642-078 - INDICATES DEVICE LOCATED IN RELAY PANEL ER-642-078
ER-642-079 - INDICATES DEVICE LOCATED IN RELAY PANEL ER-642-079
ER-642-112 - INDICATES DEVICE LOCATED IN RELAY PANEL ER-642-112
ER-642-114 - INDICATES DEVICE LOCATED IN RELAY PANEL ER-642-114
* - INDICATES TERMINAL POINT IS SHOWN AT MORE THAN ONE LOCATION ON THIS DRAWING
NOTES:
F.V.
CONTACT POSITION RESET AUTO LOCATION
1-2 THIS DWG
3-4 NOT USED
5-6 THIS DWG
7-8 NOT USED
9-10 (REF 4)
11-12 NOT USED
13-14 (REF 5)
15-16 NOT USED
CE TYPE CR2940 (CAM 9)
KEYLOCK KEY, REMOVABLE IN AUTO POSITION ONLY
ADS TIMER
F.V.
CONTACT POSITION BYPASS AUTO LOCATION
1-2 THIS DWG
3-4 NOT USED
5-6 THIS DWG
7-8 NOT USED
9-10 ADS BYPASSED I ANNUN B-3h (REF 9)
11-12 NOT USED
13-14 NOT USED
15-16 NOT USED
CE TYPE CR2940 (CAM 9)
KEYLOCK KEY, REMOVABLE IN AUTO POSITION ONLY
PNL-842-1FCS4
F.V.
DECK CONTACTS POSITION MANUAL OFF AUTO LOCATION
1 1-2 THIS DWG
3-4 NOT USED
5-6 THIS DWG
2 7-8 NOT USED
9-10 THIS DWG
3 11-12 NOT USED
13-14 THIS DWG
4 15-16 NOT USED
17-18 NOT USED
5 19-20 NOT USED
ELECTROSWITCH MODEL 20PGB-235X36
MAINTAINED CONTACT OVAL HANDLE RED & GREEN LIGHTS
WITH DROPPING RESISTORS FOR 125V DC
PNL-842-1FCS11
F.V.
CONTACT POSITION DISARMED NORMAL LOCATION
1-2 THIS DWG
3-4 NOT USED
5-6 THIS DWG
7-8 NOT USED
9-10 THIS DWG
11-12 NOT USED
13-14 ENRV POWER LOST ANNUN B-5g (REF 9)
15-16 NOT USED
CE TYPE CR2940 UN2000 OPERATOR WITH CR2940U207
DOUBLE CONTACT BLOCK
MAINTAINED CONTACT KEYLOCK SW.
KEY REMOVABLE IN NORMAL POSITION ONLY
25 BR 2002 SH 1 FLOW DIAGRAM
24 NH 7023-56795-33C CONN DIAG RELAY PNL ER-642-114
23 NH 7023-56795-33A CONN DIAG RELAY PNL ER-642-112
22 NH 7023-56751-43 CONN DIAG INT-RELAY PNL ER-642-079
21 NH 7023-56750-43 CONN DIAG INT-RELAY PNL ER-642-078
20 BR E12D1 CONN DIAG EXT-RELAY PNL ER-642-078 & 079
19 GE 719E253 SH 1 & 2 CONN DIAG RELAY PANEL ER18B
18 GE 719E231 SH 1 & 2 CONN DIAG RELAY PANEL ER18A
17 JC 19399 CONN DIAG RELAY PANEL ER8B (BOX B)
18 JC 19398 CONN DIAG RELAY PANEL ER8A (BOX A)
15 CE 112C2908 SH 3 CONNECTION DIAG INSTRU RACK RK01
14 GE 719E211 SH 1 THRU 5 CONNECTION DIAGRAM CONTROL PANEL 1F/2F
13 GU 3C-811-17-010 ELEMENTARY DIAGRAM CONTROL PANEL 5F/6F ANNUN H
12 SN 13432, 44-EC-06 SH 1 ELEMENTARY & WIRING DIAGRAM DIGITAL (BOP)
11 GE 729E182 SH 5 AUTO DEPRESS SYS ELEC ELEM DIAG SOUTH HDR HI SETPOINT NR108E,V-1-0177
10 GE 729E182 SH 4 AUTO DEPRESS SYS ELEC ELEM DIAG NORTH HDR LO SETPOINT NR108D,V-1-0176
9 GU 3E-811-17-004 SH 1 & 2 ELEMENTARY DIAGRAM CONTROL PANEL 1F/2F ANNUN B
8 SN SK-13432, 44-DC-19 SYSTEM MONITORS & SENSORS DATA BASE MATRIX PLANT COMPUTER SYS
7 GE 729E182 SH 2 AUTO DEPRESS SYS ELEC ELEM DIAG SOUTH HDR HI SETPOINT NR108C,V-1-0174
6 GE 146F372 SH 1 FLOW DIAG RX VESSEL LVL/PRESS/TEMP
5 NU 50B0E6003 SH 2 CORE SPRAY RBCCW DRYWELL ISOL ELEM DIAG LOGIC CHANNEL B & D
4 NU 50B0E6003 SH 1 CORE SPRAY RBCCW DRYWELL ISOL ELEM DIAG LOGIC CHANNEL A & C
3 GE 729E182 SH 3 AUTO DEPRESS SYS ELEC ELEM DIAG SOUTH HDR HI SETPOINT NR108C,V-1-0175
2 GU 3C-735-11-003 PNL SCHED 125V DC PWR PNL F
1 GU 3C-735-11-001 SH 2 PANEL SCHEDULE 125V DC POWER PANEL D (DC-D)
NO. DWG. NO. TITLE
REFERENCES
CAD FILE NAME: GE 729E182 D1 R33
REVISION 27 OF THIS DRAWING WAS REDRAWN FROM GE 729E182 SH 1 REV 26 AND SH 4 REV 12
REVISION 32 OF THIS DRAWING WAS TRANSLATED TO AUTOCAD FROM CADAM FILE: VSE_842.17.0004.001-.320P
USE
THIS IS A COMPUTER GENERATED DRAWING DO NOT REVISE IT MANUALLY
GPU NUCLEAR
AUTO DEPRESSURIZATION SYS
ELECTRICAL ELEMENTARY DIAGRAM
SOUTH HEADER LO SETPOINT NR108A,V-1-0173
OYSTER CREEK
DWG. NO. GE 729E182
SH. 1
REV. 33
SCALE: NONE
W.A.NO.
STICK #7

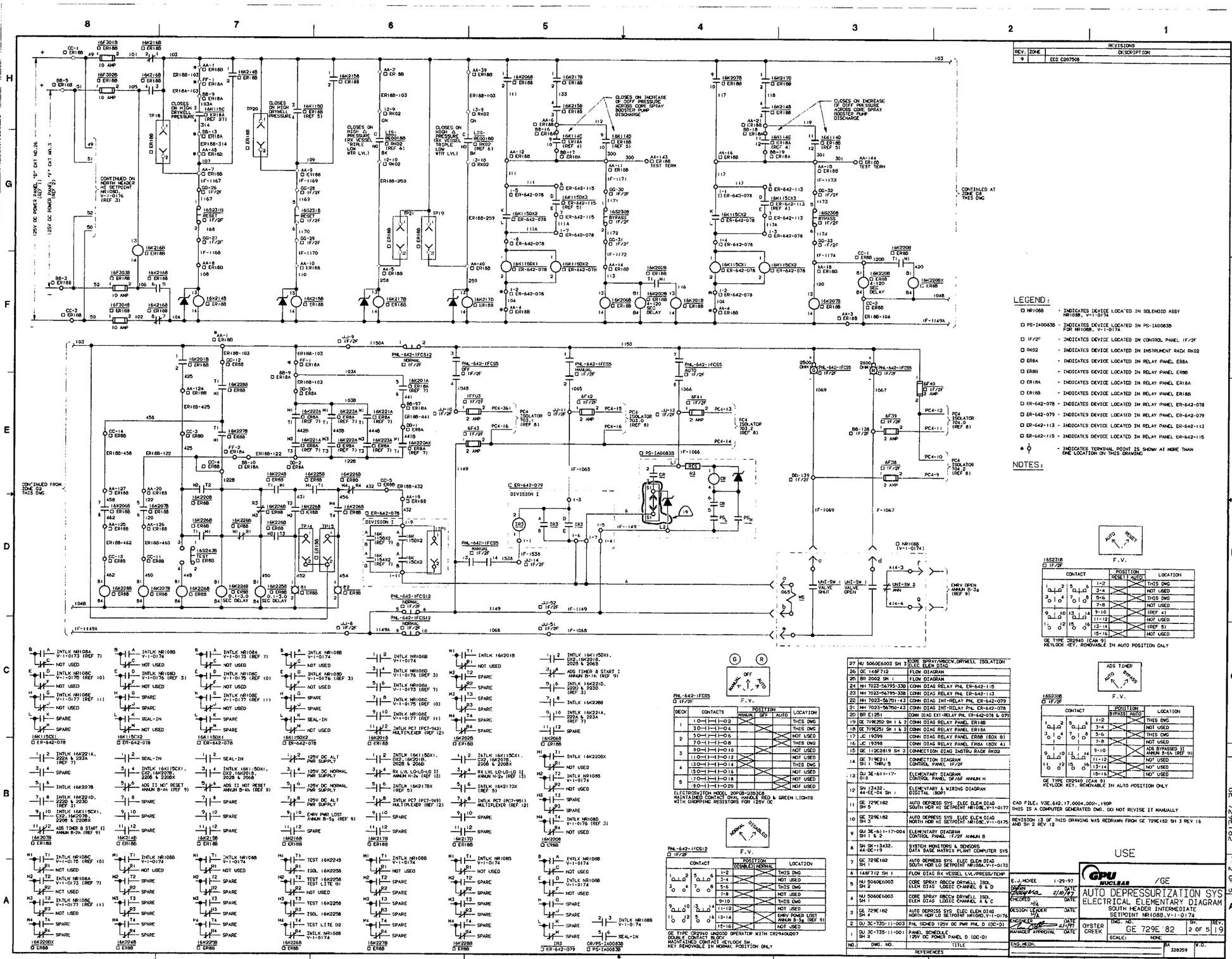

REV.	ZONE	DESCRIPTION
9		ECO C207506

LEGEND:

- NR108B - INDICATES DEVICE LOCATED IN SOLENOID ASSY NR108B, V-1-0174
- PS-IA0063B - INDICATES DEVICE LOCATED IN PS-IA0063B FOR NR108B, V-1-0174
- 1F/2F - INDICATES DEVICE LOCATED IN CONTROL PANEL 1F/2F
- RK02 - INDICATES DEVICE LOCATED IN INSTRUMENT RACK RK02
- ER8A - INDICATES DEVICE LOCATED IN RELAY PANEL ER8A
- ER8B - INDICATES DEVICE LOCATED IN RELAY PANEL ER8B
- ER18A - INDICATES DEVICE LOCATED IN RELAY PANEL ER18A
- ER18B - INDICATES DEVICE LOCATED IN RELAY PANEL ER18B
- ER-642-078 - INDICATES DEVICE LOCATED IN RELAY PANEL ER-642-078
- ER-642-079 - INDICATES DEVICE LOCATED IN RELAY PANEL ER-642-079
- ER-642-113 - INDICATES DEVICE LOCATED IN RELAY PANEL ER-642-113
- ER-642-115 - INDICATES DEVICE LOCATED IN RELAY PANEL ER-642-115
- * ϕ - INDICATES TERMINAL POINT IS SHOWN AT MORE THAN ONE LOCATION ON THIS DRAWING

NOTES:

16S231B 1F/2F — F.V. AUTO RESET

CONTACT	POSITION RESET	POSITION AUTO	LOCATION
1-2	X		THIS DWG
3-4		X	NOT USED
5-6	X		THIS DWG
7-8		X	NOT USED
9-10	X		(REF 4)
11-12		X	NOT USED
13-14	X		(REF 5)
15-16		X	NOT USED

GE TYPE CR2940 (CAM 9)
KEYLOCK KEY, REMOVABLE IN AUTO POSITION ONLY

16S230B 1F/2F — F.V. ADS TIMER AUTO BYPASS

CONTACT	POSITION BYPASS	POSITION AUTO	LOCATION
1-2	X		THIS DWG
3-4		X	NOT USED
5-6	X		THIS DWG
7-8		X	NOT USED
9-10		X	ADS BYPASSED II ANNUN B-6h (REF 9)
11-12		X	NOT USED
13-14		X	NOT USED
15-16		X	NOT USED

GE TYPE CR2940 (CAM 9)
KEYLOCK KEY, REMOVABLE IN AUTO POSITION ONLY

CAD FILE: V3E.642.17.0004.000+.190P
THIS IS A COMPUTER GENERATED DWG. DO NOT REVISE IT MANUALLY

REVISION 13 OF THIS DRAWING WAS REDRAWN FROM GE 729E182 SH 3 REV 16 AND SH 2 REV 12

PNL-642-1FCS5 1F/2F — F.V. MANUAL OFF AUTO

DECK	CONTACTS	POSITION MANUAL	POSITION OFF	POSITION AUTO	LOCATION
1	1O—I—I—I—O2	X			THIS DWG
	3O—I—I—I—O4		X		THIS DWG
2	3O—I—I—I—O6		X		NOT USED
	7O—I—I—I—O8		X		THIS DWG
3	3O—I—I—I—O10		X		NOT USED
	11O—I—I—I—O12		X		NOT USED
4	13O—I—I—I—O14		X		THIS DWG
	15O—I—I—I—O16		X		NOT USED
5	17O—I—I—I—O18		X		NOT USED
	19O—I—I—I—O20		X		NOT USED

ELECTROSWITCH MODEL 20PQB-2353CB
MAINTAINED CONTACT OVAL HANDLE RED & GREEN LIGHTS WITH DROPPING RESISTORS FOR 125V DC

PNL-642-1FCS12 1F/2F — F.V. NORMAL DISABLED

CONTACT	POSITION DISABLED	POSITION NORMAL	LOCATION
1-2	X		THIS DWG
3-4		X	NOT USED
5-6	X		THIS DWG
7-8		X	NOT USED
9-10	X		THIS DWG
11-12		X	NOT USED
13-14	X		ENRV POWER LOST ANNUN B-5g (REF 9)
15-16		X	NOT USED

GE TYPE CR2940 UN2000 OPERATOR WITH CR2940U207
DOUBLE CONTACT BLOCK
MAINTAINED CONTACT (KEYLOCK SW.
KEY REMOVABLE IN NORMAL POSITION ONLY

NO.	DWG. NO.	TITLE
27	NJ 5060E6003 SH 3	CORE SPRAY/RBCCW,DRYWELL ISOLATION ELEC ELEM DIAG
26	GE 148F712	FLOW DIAGRAM
25	BR 2002 SH 1	FLOW DIAGRAM
24	NI 7023-5795-330	CONN DIAG RELAY PNL ER-642-115
23	NI 7023-5795-338	CONN DIAG RELAY PNL ER-642-113
22	NI 7023-5751-43	CONN DIAG INT-RELAY PNL ER-642-079
21	NI 7023-5750-43	CONN DIAG INT-RELAY PNL ER-642-078
20	BR E1251	CONN DIAG EXT-RELAY PNL ER-642-078 & 079
19	GE 719E252 SH 1 & 2	CONN DIAG RELAY PANEL ER18B
18	GE 719E251 SH 1 & 2	CONN DIAG RELAY PANEL ER18A
17	JC 19399	CONN DIAG RELAY PANEL ER8B (BOX B)
16	JC 19396	CONN DIAG RELAY PANEL ER8A (BOX A)
15	GE 112C2819 SH 3	CONNECTION DIAG INSTRU RACK RK02
14	GE 719E211 SH 1 THRU 5	CONNECTION DIAGRAM CONTROL PANEL 1F/2F
13	GU 3E-611-17-010	ELEMENTARY DIAGRAM CONTROL PANEL 5F/6F ANNUN H
12	SN 13432, 44-EE-004 SH 1	ELEMENTARY & WIRING DIAGRAM DIGITAL (BOP)
11	GE 729E182 SH 5	AUTO DEPRESS SYS ELEC ELEM DIAG SOUTH HDR HI SETPOINT NR108E,V-1-0177
10	GE 729E182 SH 3	AUTO DEPRESS SYS ELEC ELEM DIAG NORTH HDR HI SETPOINT NR108C,V-1-0175
9	GU 3E-611-17-004 SH 1 & 2	ELEMENTARY DIAGRAM CONTROL PANEL 1F/2F ANNUN B
8	SN SK-13432, 44-DE-19	SYSTEM MONITORS & SENSORS DATA BASE MATRIX PLANT COMPUTER SYS
7	GE 729E182 SH 1	AUTO DEPRESS SYS ELEC ELEM DIAG SOUTH HDR LO SETPOINT NR108A,V-1-0173
6	148F712 SH 1	FLOW DIAG RX VESSEL LVL/PRESS/TEMP
5	NJ 5060E6003 SH 2	CORE SPRAY RBCCW DRYWELL ISOL ELEM DIAG LOGIC CHANNEL A & C
4	NJ 5060E6003 SH 1	CORE SPRAY RBCCW DRYWELL ISOL ELEM DIAG LOGIC CHANNEL A & C
3	GE 729E182 SH 4	AUTO DEPRESS SYS ELEC ELEM DIAG NORTH HDR LO SETPOINT NR108D,V-1-0176
2	GU 3C-735-11-003	PNL SCHED 125V DC PWR PNL D (DC-D)
1	GU 3C-735-11-001 SH 2	PANEL SCHEDULE 125V DC POWER PANEL D (DC-D)

REFERENCES

E.J. MCKEE	1-29-97	DATE
DRAWN		
CHECKED	2/10/97	DATE
N/A		DATE
DESIGN LEADER N/A		DATE
ENGINEER	2/11/97	DATE
MANAGER APPROVAL		DATE

USE

GPU NUCLEAR /GE

AUTO DEPRESSURIZATION SYS ELECTRICAL ELEMENTARY DIAGRAM

SOUTH HEADER INTERMEDIATE SETPOINT NR108B,V-1-0174

DWG. NO.	SH.	REV.
GE 729E 182	2 OF 5	19

OYSTER CREEK — SCALE: NONE

ENG. MECH. — BA 328259 — V.O.

STICK #7

GE 729E182 SH 2 OF 5

REVISIONS		
REV.	ZONE	DESCRIPTION
19		ECO C207566

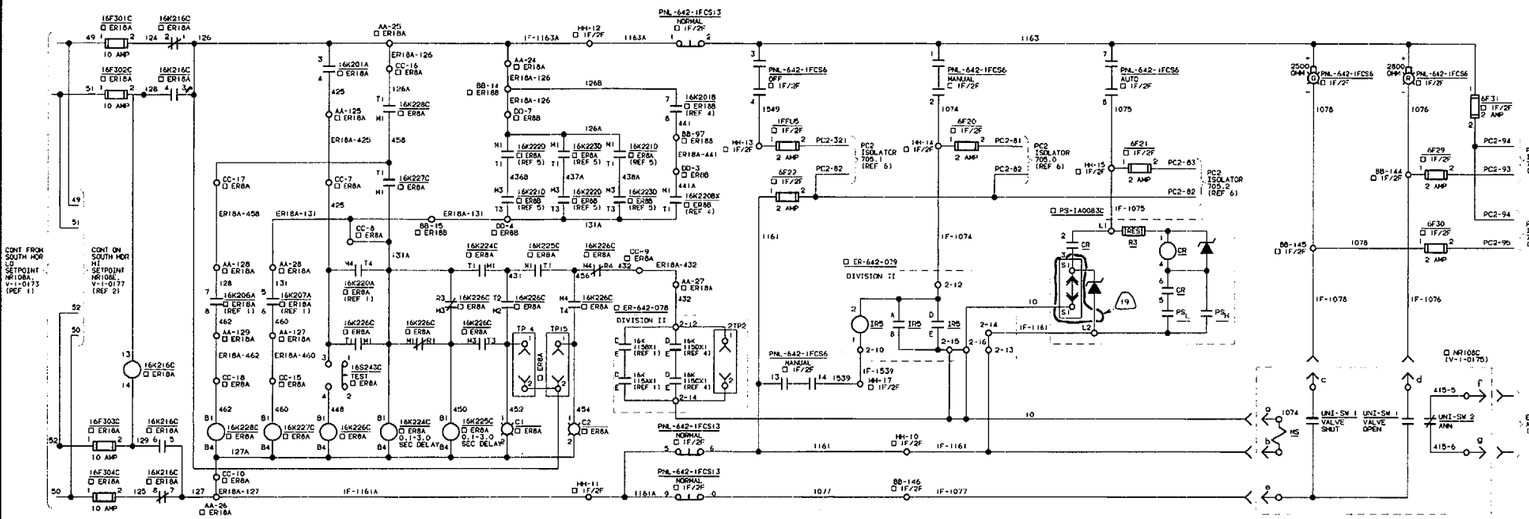

LEGEND:

- NR108C - INDICATES DEVICE LOCATED IN SOLENOID ASSY NR108C, V-1-0175
- PS-1A0083C - INDICATES DEVICE LOCATED IN PS-1A0083C FOR NR108C, V-1-0175
- 1F/2F - INDICATES DEVICE LOCATED IN CONTROL PANEL 1F/2F
- ER8A - INDICATES DEVICE LOCATED IN RELAY PANEL ER8A
- ER8B - INDICATES DEVICE LOCATED IN RELAY PANEL ER8B
- ER18A - INDICATES DEVICE LOCATED IN RELAY PANEL ER18A
- ER18B - INDICATES DEVICE LOCATED IN RELAY PANEL ER18B
- ER-642-078 - INDICATES DEVICE LOCATED IN RELAY PANEL ER-642-078
- ER-642-079 - INDICATES DEVICE LOCATED IN RELAY PANEL ER-642-079

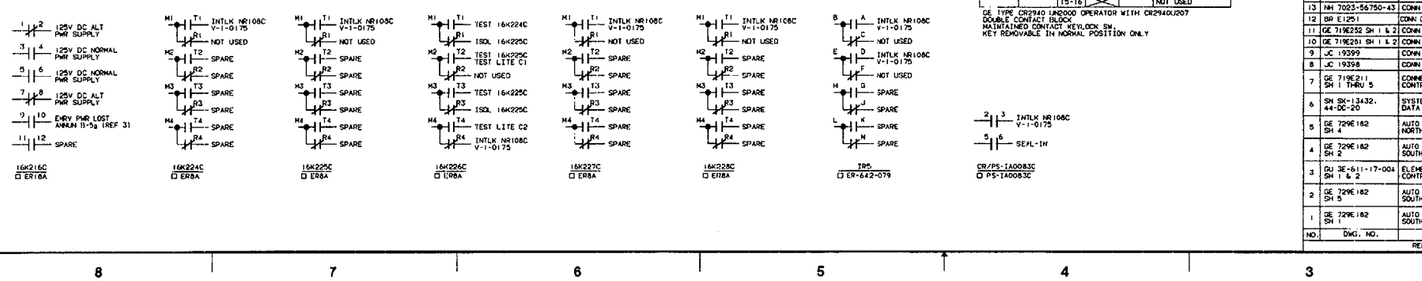

PNL-642-1FCS6
1F/2F

DECK	CONTACTS	POSITION MANUAL	POSITION OFF	POSITION AUTO	LOCATION
1	1O—|—|—O 2	X			THIS DWG
	3O—|—|—O 4			X	THIS DWG
2	5O—|—|—O 6			X	NOT USED
	7O—|—|—O 8			X	THIS DWG
3	9O—|—|—O 10		X		NOT USED
	11O—|—|—O 12	X			NOT USED
4	13O—|—|—O 14	X			THIS DWG
	15O—|—|—O 16		X		NOT USED
5	17O—|—|—O 18			X	NOT USED
	19O—|—|—O 20			X	NOT USED

ELECTROSWITCH MODEL 20PCB-2333C8
MAINTAINED CONTACT OVAL HANDLE RED & GREEN LIGHTS
WITH DROPPING RESISTORS FOR 125V DC

PNL-642-1FCS13
1F/2F

CONTACT		POSITION DISABLED	POSITION NORMAL	LOCATION
1 2 5 6	1-2		X	THIS DWG
	3-4	X		NOT USED
3 4 7 8	5-6		X	THIS DWG
	7-8	X		NOT USED
	9-10		X	THIS DWG
9 10 13 14	11-12	X		NOT USED
11 12 15 16	13-14		X	ENRV POWER LOST ANNUN B-3g (REF 3)
	15-16	X		NOT USED

GE TYPE CR2940 UNDGOO OPERATOR WITH CR2940U207
DOUBLE CONTACT BLOCK
MAINTAINED CONTACT KEYLOCK SW.
KEY REMOVABLE IN NORMAL POSITION ONLY

NOTES:

NO.	DWG. NO.	TITLE
16	GE 148F712	FLOW DIAGRAM
15	BR 2002 SH 1	FLOW DIAGRAM
14	NH 7023-56751-43	CONN DIAG INT-RELAY PNL ER-642-079
13	NH 7023-56750-43	CONN DIAG INT-RELAY PNL ER-642-078
12	BR E1251	CONN DIAG EXT-RELAY PNL ER-642-078 & 079
11	GE 719E252 SH 1 & 2	CONN DIAG RELAY PANEL ER18B
10	GE 719E251 SH 1 & 2	CONN DIAG RELAY PANEL ER18A
9	JC 19399	CONN DIAG RELAY PANEL ER8B (BOX B)
8	JC 19398	CONN DIAG RELAY PANEL ER8A (BOX A)
7	GE 719E211 SH 1 THRU 5	CONNECTION DIAGRAM CONTROL PANEL 1F/2F
6	SH SK-13432, 44-DC-20	SYSTEM MONITORS & SENSORS DATA BASE MATRIX PLANT COMPUTER SYS.
5	GE 729E182 SH 4	AUTO DEPRESS SYS. ELEC ELEM DIAG NORTH HDR LO SETPOINT NR108D,V-1-0176
4	GE 729E182 SH 2	AUTO DEPRESS SYS. ELEC ELEM DIAG SOUTH HDR INT SETPOINT NR108B,V-1-0174
3	GU 3E-611-17-004 SH 1 & 2	ELEMENTARY DIAGRAM CONTROL PANEL 1F/2F ANNUN B
2	GE 729E182 SH 5	AUTO DEPRESS SYS. ELEC ELEM DIAG SOUTH HDR HI SETPOINT NR108C,V-1-0177
1	GE 729E182 SH 1	AUTO DEPRESS SYS. ELEC ELEM DIAG SOUTH HDR LO SETPOINT NR108A,V-1-0173

REFERENCES

CAD FILE: V3E.642.17.0004.003-.1901
THIS IS A COMPUTER GENERATED DWG. DO NOT REVISE IT MANUALLY

REVISION 17 OF THIS DRAWING WAS REDRAWN FROM GE 729E182 SH 2 REV 12

USE

DRAWN	E.J.MCKEE	01/29/97
CHECKED	n/a	DATE
DESIGN LEADER	n/a	DATE
ENGINEER		DATE
MANAGER APPROVAL		DATE
ENG.MECH.		

GPU NUCLEAR /GE

AUTO DEPRESSURIZATION SYS
ELECTRICAL ELEMENTARY DIAGRAM
NORTH HEADER HI SETPOINT NR108C,V-1-0175

OYSTER CREEK | DWG. NO. GE 729E182 | SH. 3 OF 5 | REV. 19 | SCALE: NONE | B.A. 328259 | W.O.

DOC.NO. GE 729E182 SH. 3 OF 5 REV. 19

STICK#7

REVISIONS		
REV.	ZONE	DESCRIPTION
2		ECO C207508

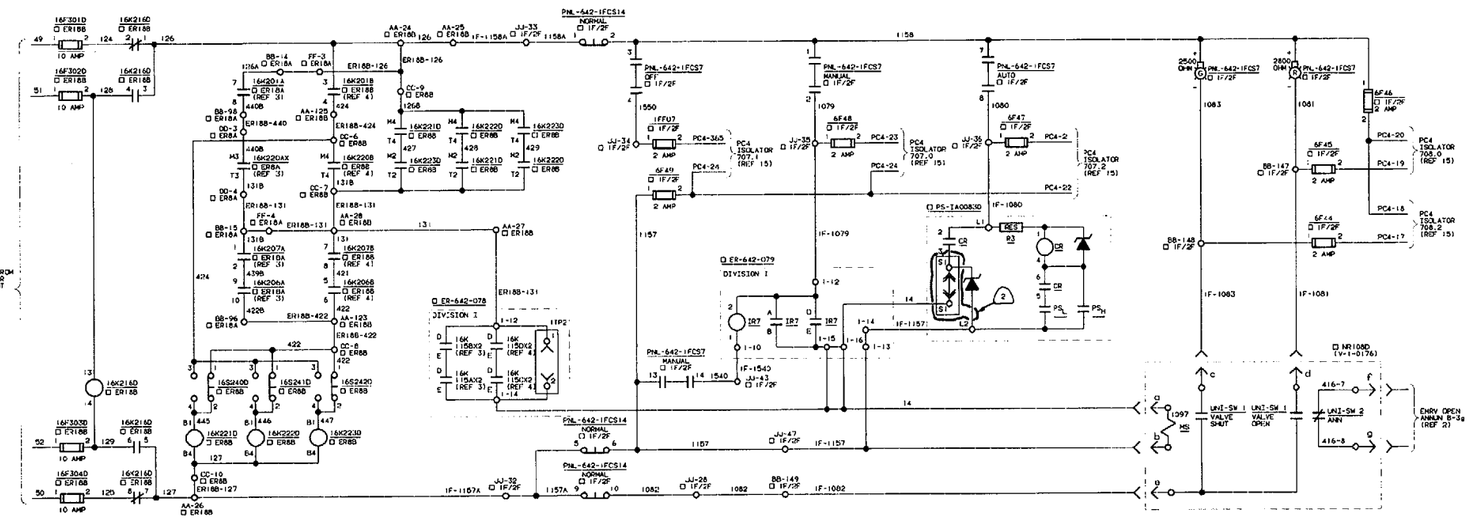

LEGEND:

- NR108D - INDICATES DEVICE LOCATED IN SOLENOID ASSY NR108D, V-1-0176
- PS-IA0083D - INDICATES DEVICE LOCATED IN PS-IA0083D FOR NR108D, V-1-0176
- IF/2F - INDICATES DEVICE LOCATED IN CONTROL PANEL IF/2F
- ER8A - INDICATES DEVICE LOCATED IN RELAY PANEL ER8A
- ER8B - INDICATES DEVICE LOCATED IN RELAY PANEL ER8B
- ER18A - INDICATES DEVICE LOCATED IN RELAY PANEL ER18A
- ER18B - INDICATES DEVICE LOCATED IN RELAY PANEL ER18B
- ER-642-078 - INDICATES DEVICE LOCATED IN RELAY PANEL ER-642-078
- ER-642-079 - INDICATES DEVICE LOCATED IN RELAY PANEL ER-642-079

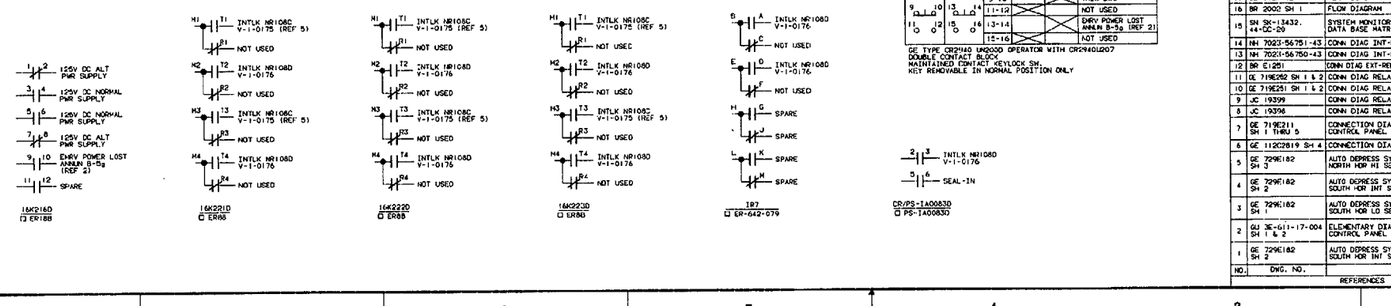

PNL-642-1FCS7 IF/2F

DECK	CONTACTS	POSITION MANUAL	OFF	AUTO	LOCATION
1	10—|—|—O2	X			THIS DWG
	30—|—|—O4		X		THIS DWG
	50—|—|—O6			X	NOT USED
2	70—|—|—O8			X	THIS DWG
3	90—|—|—O10			X	NOT USED
	110—|—|—O12	X			NOT USED
4	130—|—|—O14	X			THIS DWG
	150—|—|—O16			X	NOT USED
5	170—|—|—O18			X	NOT USED
	190—|—|—O20			X	NOT USED

ELECTROSWITCH MODEL 2DPGR-23633B
MAINTAINED CONTACT OVAL HANDLE RED & GREEN LIGHTS WITH DROPPING RESISTORS FOR 125V DC

PNL-642-1FCS14 IF/2F

CONTACT	POSITION DISABLED	NORMAL	LOCATION
1-2		X	THIS DWG
3-4	X		NOT USED
5-6		X	THIS DWG
7-8	X		NOT USED
9-10		X	THIS DWG
11-12	X		NOT USED
13-14		X	ENRV POWER LOST ANNUN B-5g (REF 2)
15-16	X		NOT USED

GE TYPE CR2940 LK2000 OPERATOR WITH CR2940L207 DOUBLE CONTACT BLOCK
MAINTAINED CONTACT KEYLOCK SW.
KEY REMOVABLE IN NORMAL POSITION ONLY

NOTES:

NO.	DWG. NO.	TITLE
17	GE 148F712	FLOW DIAGRAM
16	BR 2002 SH 1	FLOW DIAGRAM
15	SN SK-13432, 44-CC-20	SYSTEM MONITORS & SENSORS DATA BASE MATRIX PLANT COMPUTER SYS
14	NH 7023-56751-43	CONN DIAG INT-RELAY PNL ER-642-079
13	NH 7023-56750-43	CONN DIAG INT-RELAY PNL ER-642-078
12	BR E1251	CONN DIAG EXT-RELAY PNL ER-642-078 & 079
11	GE 719E252 SH 1 & 2	CONN DIAG RELAY PANEL ER18D
10	GE 719E251 SH 1 & 2	CONN DIAG RELAY PANEL ER18A
9	JC 19399	CONN DIAG RELAY PANEL ER8B (BOX B)
8	JC 19396	CONN DIAG RELAY PANEL ER8A (BOX A)
7	GE 719E211 SH 1 THRU 5	CONNECTION DIAGRAM CONTROL PANEL IF/2F
6	GE 112C2819 SH 4	CONNECTION DIAGRAM PS-IA0083D
5	GE 729E182 SH 3	AUTO DEPRESS SYS ELEC ELEM DIAG NORTH HDR HI SETPOINT NR108C,V-1-0175
4	GE 729E182 SH 2	AUTO DEPRESS SYS ELEC ELEM DIAG SOUTH HDR INT SETPOINT NR108D,V-1-0174
3	GE 729E182 SH 1	AUTO DEPRESS SYS ELEC ELEM DIAG SOUTH HDR LO SETPOINT NR108A,V-1-0173
2	GU 3E-611-17-004 SH 1 & 2	ELEMENTARY DIAGRAM CONTROL PANEL IF/2F ANNUN 13
1	GE 729E182 SH 2	AUTO DEPRESS SYS ELEC ELEM DIAG SOUTH HDR INT SETPOINT NR108D,V-1-0174

REFERENCES

CAD FILE: V3E.642.17.0004.004-.0201
THIS IS A COMPUTER GENERATED DWG. DO NOT REVISE IT MANUALLY

REVISION 0 OF THIS DRAWING WAS REDRAWN FROM GE 729E182 SH 3 REV 16 AND SH 2 REV 12

USE

DRAWN	E.J.MCKEE	1/29/97 DATE
CHECKED		2/10/97 DATE
DESIGN LEADER	N/A	DATE
ENGINEER		2/10/97 DATE
MANAGER APPROVAL		DATE

GPU NUCLEAR /GE

AUTO DEPRESSURIZATION SYS
ELECTRICAL ELEMENTARY DIAGRAM
NORTH HEADER LO SETPOINT NR108D,V-1-0176

OYSTER CREEK — DWG. NO. GE 729E182 — SH. 4 OF 5 — REV. 2 — SCALE: NONE

ENG.MECH. — BA 328259 — W.O.

STICK#7

DWG.NO. GE 729E182 SH. 4 OF 5

REVISIONS		
REV.	ZONE	DESCRIPTION
2		ECO C207508

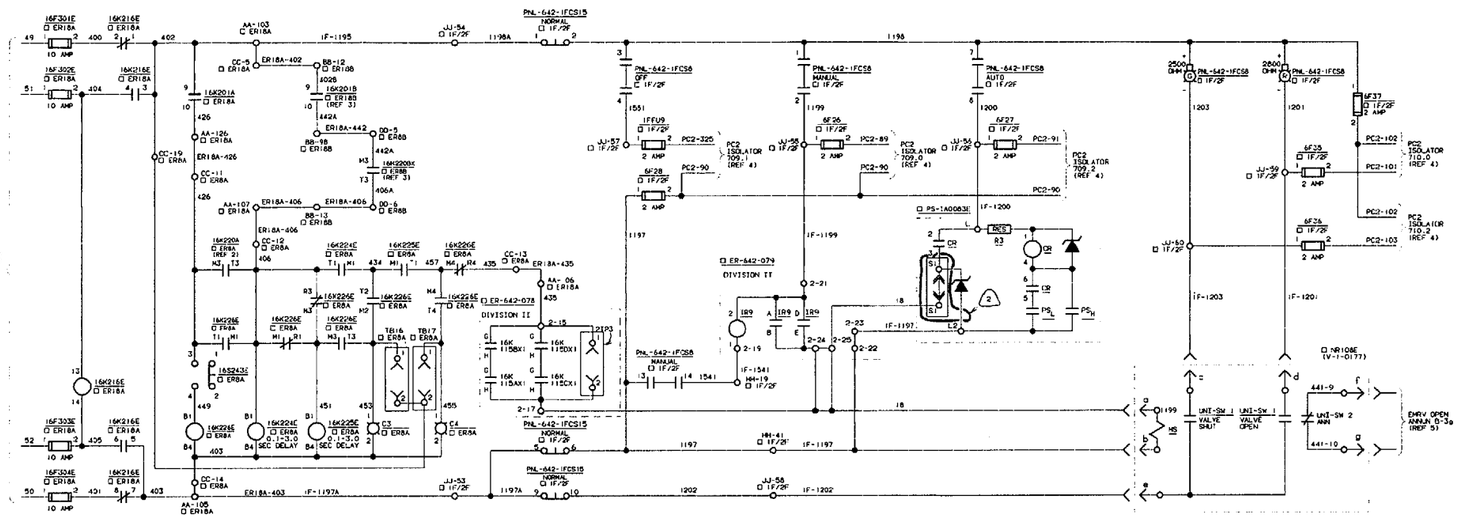

LEGEND:

- NR108E - INDICATES DEVICE LOCATED IN SOLENOID ASSY NR108E, V-1-0177
- PS-IA0063E - INDICATES DEVICE LOCATED IN PS-IA0063E FOR NR108E, V-1-0177
- IF/2F - INDICATES DEVICE LOCATED IN CONTROL PANEL IF/2F
- ER8A - INDICATES DEVICE LOCATED IN RELAY PANEL ER8A
- ER8B - INDICATES DEVICE LOCATED IN RELAY PANEL ER8B
- ER18A - INDICATES DEVICE LOCATED IN RELAY PANEL ER18A
- ER18B - INDICATES DEVICE LOCATED IN RELAY PANEL ER18B
- ER-642-078 - INDICATES DEVICE LOCATED IN RELAY PANEL ER-642-078
- ER-642-079 - INDICATES DEVICE LOCATED IN RELAY PANEL ER-642-079

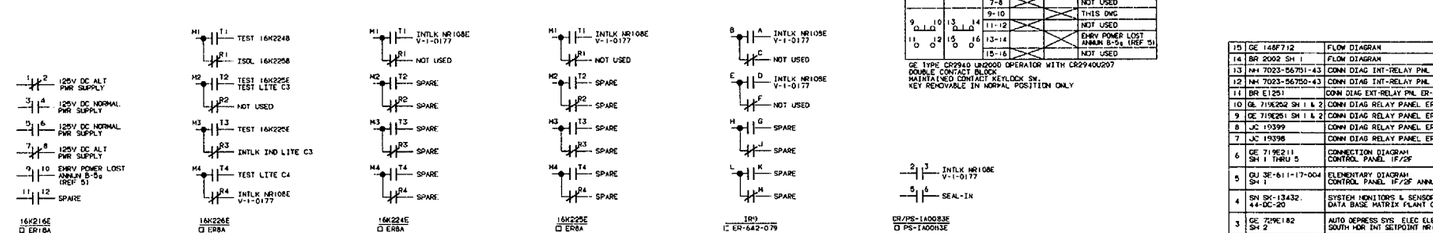

PNL-642-IFCS8
IF/2F

F.V.

DECK	CONTACTS	POSITION MANUAL	POSITION OFF	POSITION AUTO	LOCATION
1	1 O—||—O 2	X			THIS DWG
	3 O—||—O 4		X		THIS DWG
2	5 O—||—O 6			X	NOT USED
	7 O—||—O 8			X	THIS DWG
3	9 O—||—O 10		X		NOT USED
	11 O—||—O 12	X			NOT USED
4	13 O—||—O 14	X			THIS DWG
	15 O—||—O 16		X		NOT USED
5	17 O—||—O 18			X	NOT USED
	19 O—||—O 20			X	NOT USED

ELECTROSWITCH MODEL 20FGB-2353C8
MAINTAINED CONTACT OVAL HANDLE RED & GREEN LIGHTS
WITH DROPPING RESISTORS FOR 125V DC

PNL-642-IFCS15
IF/2F

F.V.

CONTACT	POSITION DISABLED	POSITION NORMAL	LOCATION
1-2		X	THIS DWG
3-4	X		NOT USED
5-6		X	THIS DWG
7-8	X		NOT USED
9-10		X	THIS DWG
11-12	X		NOT USED
13-14		X	ENRV POWER LOST ANNUN B-5s (REF 5)
15-16	X		NOT USED

GE TYPE CR2940 UN2000 OPERATOR WITH CR2940U207
DOUBLE CONTACT BLOCK
MAINTAINED CONTACT KEYLOCK SW.
KEY REMOVABLE IN NORMAL POSITION ONLY

NOTES:

NO.	DWG. NO.	TITLE
15	GE 146F712	FLOW DIAGRAM
14	BR 2002 SH 1	FLOW DIAGRAM
13	NH 7023-56751-43	CONN DIAG INT-RELAY PNL ER-642-079
12	NH 7023-56750-43	CONN DIAG INT-RELAY PNL ER-642-078
11	BR E1251	CONN DIAG EXT-RELAY PNL ER-642-078 & 079
10	GL 719E252 SH 1 & 2	CONN DIAG RELAY PANEL ER18B
9	GE 719E251 SH 1 & 2	CONN DIAG RELAY PANEL ER18A
8	JC 19399	CONN DIAG RELAY PANEL ER8B (BOX B)
7	JC 19398	CONN DIAG RELAY PANEL ER8A (BOX A)
6	GE 719E211 SH 1 THRU 5	CONNECTION DIAGRAM CONTROL PANEL IF/2F
5	GU 3E-611-17-004 SH 1	ELEMENTARY DIAGRAM CONTROL PANEL IF/2F ANNUN B
4	SN SK-13432. 44-DC-20	SYSTEM MONITORS & SENSORS DATA BASE MATRIX PLANT COMPUTER SYS
3	GE 729E182 SH 2	AUTO DEPRESS SYS ELEC ELEM DIAG SOUTH HDR INT SETPOINT NR108B,V-1-0174
2	GE 729E182 SH 1	AUTO DEPRESS SYS ELEC ELEM DIAG NORTH HDR HI SETPOINT NR108A,V-1-0173
1	GE 729E182 SH 3	AUTO DEPRESS SYS ELEC ELEM DIAG NORTH HDR HI SETPOINT NR108C,V-1-0175

REFERENCES

CAD FILE: V3E.642.17.0004.005-.0201
THIS IS A COMPUTER GENERATED DWG. DO NOT REVISE IT MANUALLY

REVISION 0 OF THIS DRAWING WAS REDRAWN FROM GE 729E182 SH 1 REV 26 AND SH 2 REV 12

USE

E.J.MCKEE	01-29-97	DATE
DRAWN	2/10/97	DATE
CHECKED	n/a	DATE
DESIGN LEADER	n/a	DATE
ENGINEER	2/11/97	DATE
MANAGER APPROVAL		DATE
ENG.MECH.		

GPU NUCLEAR /GE

AUTO DEPRESSURIZATION SYS ELECTRICAL ELEMENTARY DIAGRAM

SOUTH HEADER HI SETPOINT NR108E,V-1-0177

OYSTER CREEK | DWG. NO. GE 729E182 | SH. 5 OF 5 | REV. 2

SCALE: NONE | BA 328259 | W.O.

STICK#7

DRAWING GE 729E182 SH 5 OF 5

DRAWING NO. GE 729E182 SH 5 OF 5 REV 2 SCALE: NONE

GENERAL ELECTRIC 798D807

PLANT HEAT BALANCE

FIRST MADE FOR OYSTER CREEK

798D807

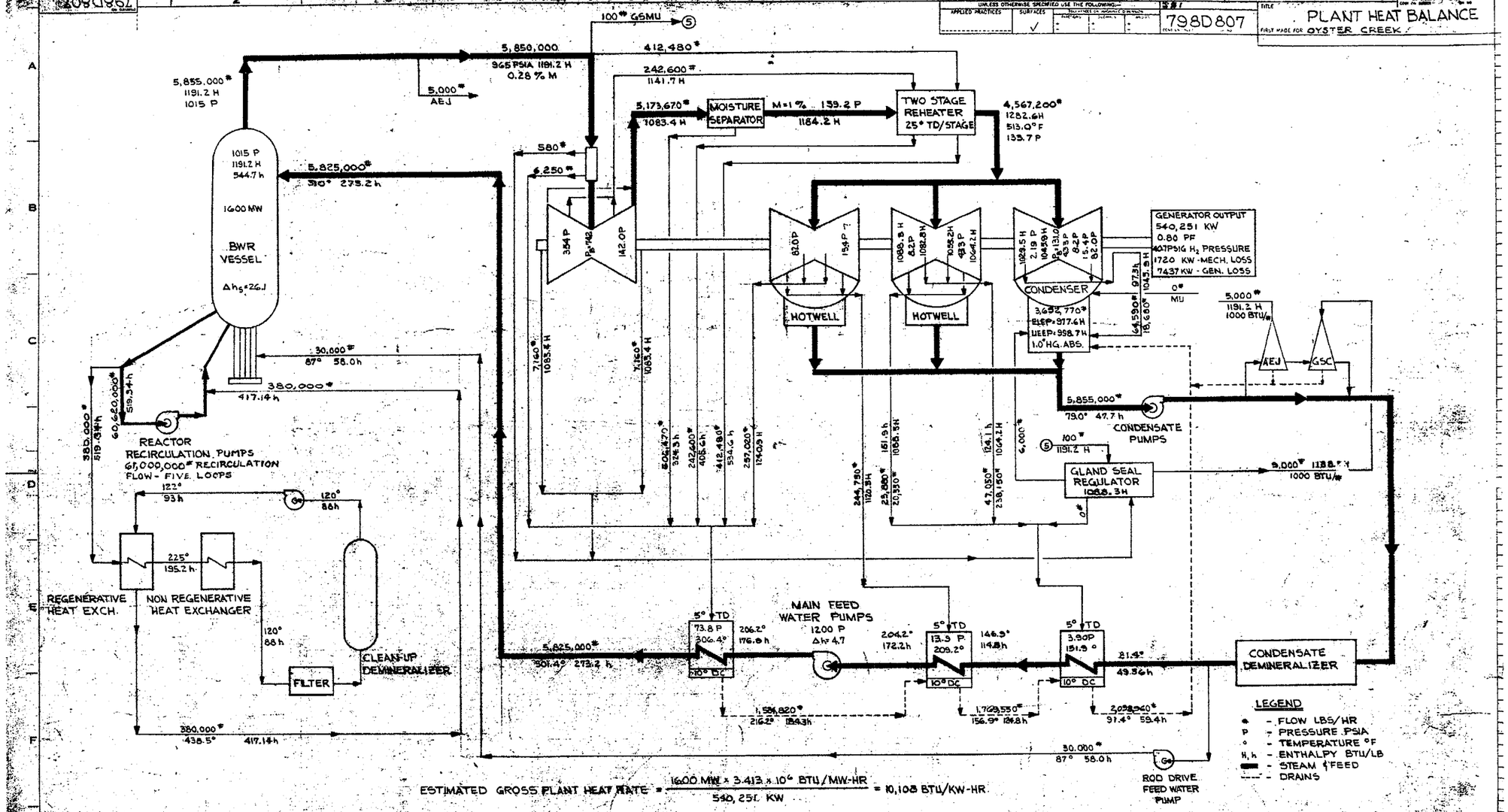

ESTIMATED GROSS PLANT HEAT RATE = $\frac{1600\ MW \times 3.413 \times 10^6\ BTU/MW\text{-}HR}{540,251\ KW}$ = 10,108 BTU/KW-HR

ESTIMATED NET PLANT HEAT RATE = $\frac{1600\ MW \times 3.413 \times 10^6\ BTU/MW\text{-}HR}{515,681\ KW}$ = 10,590 BTU/KW-HR.

DESCRIPTION OF GROUPS	REVISIONS	PRINTS TO
	1 [illegible]	5/72
	GEN. CHGS COMPLETE REVIEW	7/71
	[illegible]	7/71
	2 [illegible]	7/71
	CHANGES [illegible]	7/71

APED SAN JOSE 798D807

24X

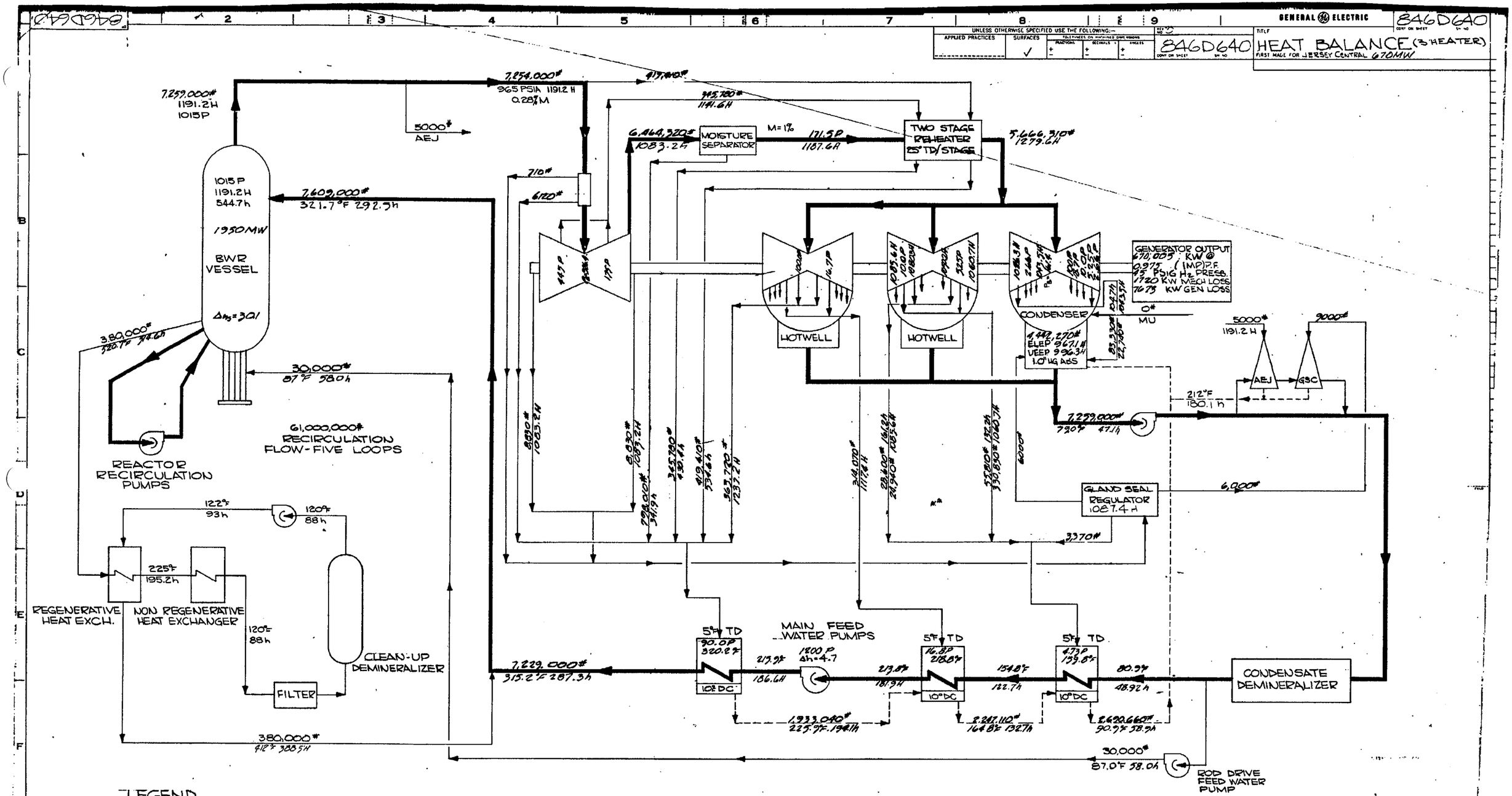
GENERAL ELECTRIC
846D640
HEAT BALANCE (3 HEATER)
FIRST MADE FOR JERSEY CENTRAL 670MW
UNLESS OTHERWISE SPECIFIED USE THE FOLLOWING:—
APPLIED PRACTICES
SURFACES
846D640
7,259,000#
1191.2H
1015P
7,254,000#
965 PSIA 1191.2 H
0.28% M
5000#
AEJ
6,464,320#
1083.2H
MOISTURE SEPARATOR
M=1%
171.5P
1187.6H
TWO STAGE REHEATER
25° TD/STAGE
5,666,310#
1279.6H
1015P
1191.2H
544.7h
1950MW
BWR VESSEL
7,609,000#
321.7°F 292.5h
710#
6120#
HOTWELL
HOTWELL
CONDENSER
GENERATOR OUTPUT
670,005 KW @
0.975 (IMP) P.F.
45 PSIG H2 PRESS.
1720 KW MECH LOSS
7673 KW GEN LOSS
0#
MU
4,442,270#
ELEP 967.1H
UEEP 996.3H
1.0" HG ABS
5000#
1191.2 H
9000#
AEJ
GSC
212°F
180.1 h
7,259,000#
79.0°F 47.1h
380,000#
520.7°F 314.6h
30,000#
87°F 58.0h
61,000,000#
RECIRCULATION
FLOW-FIVE LOOPS
REACTOR RECIRCULATION PUMPS
8,830#
1083.2H
8,830#
1083.2H
798,010#
341.9h
345,780#
430.4h
419,410#
534.6h
363,720#
1237.2H
314,070#
1117.4H
28,600#
24,940#
161.2h
1085.6H
55,810#
330,830#
132.2h
1060.7H
6000#
GLAND SEAL REGULATOR
1087.4 H
6,000#
3,370#
122°F
93h
120°F
88h
225°F
195.2h
REGENERATIVE HEAT EXCH.
NON REGENERATIVE HEAT EXCHANGER
120°F
88h
CLEAN-UP DEMINERALIZER
FILTER
5°F TD
90.0P
320.2°F
10° DC
MAIN FEED WATER PUMPS
1200 P
Δh=4.7
213.9°F
186.6H
213.8°F
181.9H
5°F TD
16.8P
218.8°F
10° DC
154.8°F
122.7h
5°F TD
4.73P
159.8°F
10° DC
80.9°F
48.92h
CONDENSATE DEMINERALIZER
7,229,000#
315.2°F 287.3h
1,933,040#
225.9°F 194.1h
2,247,110#
164.8°F 132.7h
2,690,660#
90.9°F 58.9h
380,000#
412°F 388.5H
30,000#
87.0°F 58.0h
ROD DRIVE FEED WATER PUMP
LEGEND
# = FLOW LBS/HR
P = PRESSURE, PSIA
°F = TEMPERATURE °F
H,h = ENTHALPY BTU/LB
= STEAM & FEED
---- = DRAINS
ESTIMATED GROSS PLANT HEAT RATE = 1950MW × 3.413 × 10⁶ BTU/MW.HR / 670,000 KW = 9,930 BTU/KW-HR
ESTIMATED NET PLANT HEAT RATE = 1950MW × 3.413 × 10⁶ BTU/MW.HR / 640,000 KW = 10,400 BTU/KW-HR
PROPRIETARY INFORMATION NOTICE
DESCRIPTION OF GROUPS
REVISIONS
PRINTS TO
APED
SAN JOSE
846D640
D-1008