ATTACHMENT 2

Offsite Dose Calculation Manual

FIGURE 3

FNP-0-M-011	19	20
Procedure Number	**Current Revision**	**New Revision**

New Rev./ Page #	Description Of Change	Reason For Change
20/iii	3.1.6- Added VENTILATION EXHAUST TREATMENT SYSTEM in lower case letters	To support the transition to Improved Tech specs
20/iv	7.2- Added Radioactive Effluent Release Report	
20/viii	Added References 18, 19, 20, 21, 22 &23	
20/1-1	4th bullet- Added Radioactive Effluent Release Report	
20/2-1	2.1- Added ITS Reference	
20/2-1	2.1.1 1st line- Added ITS Reference	
20/2-1	2.1.1.2 2nd para- Added Radioactive Effluent Release Report and added SOURCE CHECK in lower case letters	
20/2-5	Column Headings- Added CHANNEL OPERATIONAL TEST and added SOURCE CHECK in lower case letters	
20/2-6	a., (1) & (2)- Added CHANNEL OPERATIONAL TEST	
20/2-7	2.1.1 1st line- Added ITS Reference	
20/2-11	2.1.3 1st line- Added ITS Reference	
20/2-11	2.1.3.2- Added 10CFR 50.4 after TS Reference	
20/2-13	2.1.4 1st line- Added ITS Reference	
20/2-13	2.1.4.2- Added 10CFR 50.4 after TS Reference	
20/2-14	2.1.5.a- Added Radioactive Effluent Release Report	
20/2-14	2.1.5.b- Added FNP Quality Assurance Program	
20/3-1	3.1- Added ITS Reference	
20/3-1	3.1.1 1st line- Added ITS Reference	
20/3-1	3.1.1.2 2nd para- Added Radioactive Effluent Release Report	
20/3-1	3.1.1.3- Added CHANNEL OPERATIONAL TEST and added SOURCE CHECK in lower case letters	
20/3-5	Column Headings- Added CHANNEL OPERATIONAL TEST and added SOURCE CHECK in lower case letters	

FIGURE 3

FNP-0-M-011	19	20
Procedure Number	**Current Revision**	**New Revision**

New Rev./ Page #	Description Of Change	Reason For Change
20/3-5	a., (1), & (2)- Added CHANNEL OPERATIONAL TEST	To support the transition to Improved Tech Specs
20/3-6	3.1.2 1 1st line- Added ITS Reference	
20/3-10	3.1.3 1st line- Added ITS Reference	
20/3-10	3.1.3.2- Added 10CFR 50.4 after TS Reference	
20/3-12	3.1.4 1st line- Added ITS Reference	
20/3-12	3.1.4.2- Added 10CFR 50.4 after TS Reference	
20/3-14	3.1.5- 1st line- Added ITS Reference and added VENTILATION EXHAUST TREATMENT SYSTEM in lower case letters in two places	
20/3-14	3.1.5.2- Added 10CFR 50.4 after TS reference	
20/3-15	Added VENTILATION EXHAUST TREATMENT SYSTEM in lower case letters in five places on the page	
20/3-16	Added VENTILATION EXHAUST TREATMENT SYSTEM in lower case letters in two places	
20/3-16	3.1.6.a- Added Radioactive Effluent Release Report	
20/3-16	3.1.6.b- Added FNP Quality Assurance Program	
20/3-19	3.3.1 3rd para-Added VENTILATION EXHAUST TREATMENT SYSTEM in lower case letters	
20/3-31	3.3.5 1st bullet- Added TRM after TS Reference	
20/3-40	3.4.4 Case 1 1st line- Added 10 CFR 50.72 & 10 CFR 50.73 after TS Reference	
20/4-1	4.1.1 1st line- Added this ODCM after TS Reference	
20/4-1	4.1.1.2.2- Added 10CFR 50.4 after TS reference	

FIGURE 3

FNP-0-M-011	19	20
Procedure Number	**Current Revision**	**New Revision**

New Rev./ Page #	Description Of Change	Reason For Change
20/4-2	4.1.1.2.3- Added ITS Reference and added Radioactive Effluent Release Report	To support the transition to Improved Tech Specs
20/4-8	4.1.2 1st line- Added this ODCM after TS Reference	
20/4-8	4.1.2.2.1- Added Radioactive Effluent Release Report	
20/4-8	4.1.2.2.2- Added ITS Reference and added Radioactive Effluent Release Report	
20/4-10	4.1.3 1st line- Added this ODCM after TS Reference	
20/5-1	5.1- Added ITS Reference	
20/5-1	5.1.2- Added 10CFR 50.4 after TS reference	
20/7-1	7.1.11st line- Added ITS Reference ; added 15 after May 1	
20/7-2	Added Radioactive Effluent Release Report after Title	
20/7-2	7.2.1- Added ITS Reference and added Radioactive Effluent Release Report	
20/7-2	7.2.2- Added Radioactive Effluent Release Report	
20/7-4	7.2.2.2 1st para- Added Radioactive Effluent Release Report	
20/7-5	7.2.2.5 top para- Added Radioactive Effluent Release Report	
20/7-5	7.2.2.7- Added Radioactive Effluent Release Report	
20/7-6	Ftnt 1 at bottom of page- Added Radioactive Effluent Release Report	
20/7-7	7.4- Added 10CFR 50.4 after TS reference	
20/10-4	PGE last para- Added Radioactive Effluent Release Report	
20/10-5	10.2 1st line- Added ITS Reference	
20/10-5	Added CHANNEL OPERATIONAL TEST (COT) after CHANNEL FUNCTIONAL TEST	

FIGURE 3

FNP-0-M-011	19	20
Procedure Number	**Current Revision**	**New Revision**

New Rev./ Page #	Description Of Change	Reason For Change
20/10-6	Added Deleted after FREQUENCY NOTATION	To support the transition to Improved Tech Specs
20/10-6	MODE- Added ITS Reference after TS Reference	
20/10-6	RATED THERMAL POWER-Added 2775 MWt at end of sentence	
20/10-7	Added Deleted after SOURCE CHECK	
20/10-7	Added Deleted after VENTILATION EXHAUST TREATMENT SYSTEM	
20/10-5 thru 10-7	Added new ITS definitions where they are different from the current definition	

SOUTHERN NUCLEAR OPERATING COMPANY

JOSEPH M. FARLEY NUCLEAR PLANT

FNP-0-M-011

OFFSITE DOSE CALCULATION MANUAL

PROCEDURE USAGE REQUIREMENTS-per FNP-0-AP-6	SECTIONS
Continuous Use	
Reference Use	
Information Use	ALL

SAFETY RELATED

Approved:

Nuclear Plant - General Manager

Date Issued: 2-7-00

List of Effective Pages

Page	Rev.
i to ii, v to vi, 2-2 to 2-3, 2-8, 2-12, 2-15 to 2-48, 3-2 to 3-3, 3-7 to 3-9, 3-11, 3-13, 3-17 to 3-18, 3-20 to 3-30, 3-32 to 3-39, 3-41 to 3-53, 4-3, 4-5 to 4-7, 4-9, 4-11 to 4-12, 4-15 to 4-16, 4-18, 5-2 to 6-4, 8-1 to 10-1	13
7-2	14
4-4, 4-13, 10-2 to 10-3	15
2-9 to 2-10	16
4-14, 4-17	17
2-4, 3-4	18
iii to iv, vii to ix, 1-1, 2-1, 2-5 to 2-7, 2-11, 2-13 to 2-14, 3-1, 3-5 to 3-6, 3-10, 3-12, 3-14 to 3-16, 3-19, 3-31, 3-40, 4-1 to 4-2, 4-8, 4-10, 5-1, 7-1, 7-3 to 7-7, 10-4 to 10-9	19
	20

DISTRIBUTION LIST

For information pertaining to distribution of the ODCM, contact Farley Nuclear Plant Document Control.

TABLE OF CONTENTS

	PAGE
DISTRIBUTION LIST	i
TABLE OF CONTENTS	ii
LIST OF TABLES	v
LIST OF FIGURES	vii
REFERENCES	viii
CHAPTER 1: INTRODUCTION	1-1
CHAPTER 2: LIQUID EFFLUENTS	2-1
2.1 LIMITS OF OPERATION	2-1
2.1.1 Liquid Effluent Monitoring Instrumentation Control	2-1
2.1.2 Liquid Effluent Concentration Control	2-7
2.1.3 Liquid Effluent Dose Control	2-11
2.1.4 Liquid Radwaste Treatment System Control	2-13
2.1.5 Major Changes to Liquid Radioactive Waste Treatment Systems	2-14
2.2 LIQUID RADWASTE TREATMENT SYSTEM	2-15
2.3 LIQUID EFFLUENT MONITOR SETPOINTS	2-19
2.3.1 General Provisions Regarding Setpoints	2-19
2.3.2 Setpoints for Radwaste System Discharge Monitors	2-21
2.3.3 Setpoints for Monitors on Normally Low-Radioactivity Streams	2-29
2.4 LIQUID EFFLUENT DOSE CALCULATIONS	2-30
2.4.1 Calculation of Dose	2-30
2.4.2 Calculation of $A_{i\tau}$	2-31
2.4.3 Calculation of CF_{iv}	2-32
2.5 LIQUID EFFLUENT DOSE PROJECTIONS	2-42
2.5.1 Thirty-One Day Dose Projections	2-42
2.5.2 Dose Projections for Specific Releases	2-42
2.6 DEFINITIONS OF LIQUID EFFLUENT TERMS	2-43
CHAPTER 3: GASEOUS EFFLUENTS	3-1
3.1 LIMITS OF OPERATION	3-1
3.1.1 Gaseous Effluent Monitoring Instrumentation Control	3-1
3.1.2 Gaseous Effluent Dose Rate Control	3-6
3.1.3 Gaseous Effluent Air Dose Control	3-10
3.1.4 Control on Gaseous Effluent Dose to a Member of the Public	3-12

TABLE OF CONTENTS (Continued)

PAGE

3.1.5 Gaseous Radwaste Treatment System Control 3-14
3.1.6 MAJOR CHANGES to the GASEOUS RADIOACTIVE WASTE TREATMENT SYSTEM and the VENTILATION EXHAUST TREATMENT SYSTEM {Ventilation Exhaust Treatment System} 3-16
3.2 GASEOUS RADWASTE TREATMENT SYSTEM 3-17
3.3 GASEOUS EFFLUENT MONITOR SETPOINTS 3-19
3.3.1 General Provisions Regarding Noble Gas Monitor Setpoints 3-19
3.3.2 Setpoint for the Final Noble Gas Monitor on Each Release Pathway 3-21
3.3.3 Setpoints for Noble Gas Monitors on Effluent Source Streams 3-25
3.3.4 Determination of Allocation Factors, AG 3-28
3.3.5 Setpoints for Noble Gas Monitors with Special Requirements 3-31
3.3.6 Setpoints for Particulate and Iodine Monitors 3-31
3.4 GASEOUS EFFLUENT COMPLIANCE CALCULATIONS 3-32
3.4.1 Dose Rates at and Beyond the Site Boundary 3-32
3.4.2 Noble Gas Air Dose at or Beyond Site Boundary 3-33
3.4.3 Dose to a Member of the Public at or Beyond Site Boundary 3-37
3.4.4 Dose Calculations to Support Other Requirements 3-40
3.5 GASEOUS EFFLUENT DOSE PROJECTIONS 3-46
3.5.1 Thirty-One Day Dose Projections 3-46
3.5.2 Dose Projections for Specific Releases 3-47
3.6 DEFINITIONS OF GASEOUS EFFLUENT TERMS 3-48

CHAPTER 4: RADIOLOGICAL ENVIRONMENTAL MONITORING PROGRAM 4-1
4.1 LIMITS OF OPERATION 4-1
4.1.1 Radiological Environmental Monitoring 4-1
4.1.2 Land Use Census 4-8
4.1.3 Interlaboratory Comparison Program 4-10
4.2 RADIOLOGICAL ENVIRONMENTAL MONITORING LOCATIONS 4-11

CHAPTER 5: TOTAL DOSE DETERMINATIONS 5-1
5.1 LIMIT OF OPERATION 5-1
5.1.1 Applicability 5-1
5.1.2 Actions 5-1
5.1.3 Surveillance Requirements 5-2
5.1.4 Basis 5-2
5.2 DEMONSTRATION OF COMPLIANCE 5-3

CHAPTER 6: POTENTIAL DOSES TO MEMBERS OF THE PUBLIC DUE TO THEIR ACTIVITIES INSIDE THE SITE BOUNDARY 6-1

TABLE OF CONTENTS (Continued)

PAGE

6.1 REQUIREMENT FOR CALCULATION 6-1
6.2 CALCULATIONAL METHOD 6-1

CHAPTER 7: REPORTS 7-1
7.1 ANNUAL RADIOLOGICAL ENVIRONMENTAL OPERATING REPORT 7-1
7.1.1 Requirement for Report 7-1
7.1.2 Report Contents 7-1
7.2 ANNUAL RADIOACTIVE EFFLUENT RELEASE REPORT {RADIOACTIVE EFFLUENT RELEASE REPORT} 7-3
7.2.1 Requirement for Report 7-3
7.2.2 Report Contents 7-3
7.3 MONTHLY OPERATING REPORT 7-7
7.4 SPECIAL REPORTS 7-7

CHAPTER 8: METEOROLOGICAL MODELS 8-1
8.1 ATMOSPHERIC DISPERSION 8-1
8.1.1 Ground-Level Releases 8-1
8.1.2 Elevated Releases 8-3
8.1.3 Mixed-Mode Releases 8-5
8.2 RELATIVE DEPOSITION 8-7
8.2.1 Ground-Level Releases 8-7
8.2.2 Elevated Releases 8-7
8.2.3 Mixed-Mode Releases 8-8
8.3 ELEVATED PLUME DOSE FACTORS 8-8
8.4 METEOROLOGICAL SUMMARY 8-8

CHAPTER 9: METHODS AND PARAMETERS FOR CALCULATION OF GASEOUS EFFLUENT PATHWAY DOSE FACTORS, R_{aipj} 9-1
9.1 INHALATION PATHWAY FACTOR 9-1
9.2 GROUND PLANE PATHWAY FACTOR 9-2
9.3 GARDEN VEGETATION PATHWAY FACTOR 9-3
9.4 GRASS-COW-MILK PATHWAY FACTOR 9-6
9.5 GRASS-GOAT-MILK PATHWAY FACTOR 9-10
9.6 GRASS-COW-MEAT PATHWAY FACTOR 9-14

CHAPTER 10: DEFINITIONS OF EFFLUENT CONTROL TERMS 10-1
10.1 TERMS SPECIFIC TO THE ODCM 10-1
10.2 TERMS DEFINED IN THE TECHNICAL SPECIFICATIONS 10-5

LIST OF TABLES

		PAGE
Table 2-1.	Radioactive Liquid Effluent Monitoring Instrumentation	2-3
Table 2-2.	Radioactive Liquid Effluent Monitoring Instrumentation Surveillance Requirements	2-5
Table 2-3.	Radioactive Liquid Waste Sampling and Analysis Program	2-9
Table 2-4.	Applicability of Liquid Monitor Setpoint Methodologies	2-20
Table 2-5.	Parameters for Calculation of Doses Due to Liquid Effluent Releases	2-35
Table 2-6.	Element Transfer Factors	2-36
Table 2-7.	Adult Ingestion Dose Factors	2-37
Table 2-8.	Site-Related Ingestion Dose Factors, A_{i_T}	2-40
Table 3-1.	Radioactive Gaseous Effluent Monitoring Instrumentation	3-3
Table 3-2.	Radioactive Gaseous Effluent Monitoring Instrumentation Surveillance Requirements	3-5
Table 3-3.	Radioactive Gaseous Waste Sampling and Analysis Program	3-8
Table 3-4.	Applicability of Gaseous Monitor Setpoint Methodologies	3-20
Table 3-5.	Dose Factors for Exposure to a Semi-Infinite Cloud of Noble Gases	3-35
Table 3-6.	Dose Factors for Exposure to Direct Radiation from Noble Gases in an Elevated Finite Plume	3-36
Table 3-7.	Attributes of the Controlling Receptor	3-39
Table 3-8.	R_{aipj} for Ground Plane Pathway, All Age Groups	3-42
Table 3-9.	R_{aipj} for Inhalation Pathway, Child Age Group	3-43
Table 3-10.	R_{aipj} for Cow Meat Pathway, Child Age Group	3-44
Table 3-11.	R_{aipj} for Garden Vegetation Pathway, Child Age Group	3-45
Table 4-1.	Radiological Environmental Monitoring Program	4-4
Table 4-2.	Reporting Levels for Radioactivity Concentrations in Environmental Samples	4-6
Table 4-3.	Values for the Minimum Detectable Concentration	4-7
Table 4-4.	Radiological Environmental Monitoring Locations	4-12
Table 6-1.	Attributes of Member of the Public Receptor Locations Inside the SITE BOUNDARY	6-3
Table 8-1.	Terrain Elevation Above Plant Site Grade	8-9
Table 8-2.	Annual Average $(\bar{X}/\bar{Q})$ for Mixed Mode Releases	8-10
Table 8-3.	Annual Average $(\bar{X}/\bar{Q})$ for Ground-Level Releases	8-11
Table 8-4.	Annual Average $(\bar{D}/\bar{Q})$ for Mixed Mode Releases	8-12
Table 8-5.	Annual Average $(\bar{D}/\bar{Q})$ for Ground-Level Releases	8-13
Table 9-1.	Miscellaneous Parameters for the Garden Vegetation Pathway	9-5
Table 9-2.	Miscellaneous Parameters for the Grass-Cow-Milk Pathway	9-9

LIST OF TABLES (Continued)

		PAGE
Table 9-3.	Miscellaneous Parameters for the Grass-Goat-Milk Pathway	9-13
Table 9-4.	Miscellaneous Parameters for the Grass-Cow-Meat Pathway	9-17
Table 9-5.	Individual Usage Factors	9-18
Table 9-6.	Stable Element Transfer Data	9-19
Table 9-7.	Inhalation Dose Factors for the Infant Age Group	9-20
Table 9-8.	Inhalation Dose Factors for the Child Age Group	9-23
Table 9-9.	Inhalation Dose Factors for the Teenager Age Group	9-26
Table 9-10.	Inhalation Dose Factors for the Adult Age Group	9-29
Table 9-11.	Ingestion Dose Factors for the Infant Age Group	9-32
Table 9-12.	Ingestion Dose Factors for the Child Age Group	9-35
Table 9-13.	Ingestion Dose Factors for the Teenager Age Group	9-38
Table 9-14.	Ingestion Dose Factors for the Adult Age Group	9-41
Table 9-15.	External Dose Factors for Standing on Contaminated Ground	9-44

LIST OF FIGURES

		PAGE
Figure 2-1.	Liquid Radwaste Treatment System (Typical of Both Units)	2-16
Figure 2-2.	Steam Generator Blowdown System (Typical of Both Units)	2-17
Figure 2-3.	Liquid Discharge Pathways	2-18
Figure 3-1.	Schematic Diagram of Routine Release Sources and Release Points (Typical of Both Units)	3-18
Figure 4-1.	Airborne Sampling Locations, 0-5000 feet	4-15
Figure 4-2.	Indicator II (Community) Sampling Locations for Direct Radiation	4-16
Figure 4-3.	Airborne Sampling Locations, 0-20 miles	4-17
Figure 4-4.	Water Sampling Locations	4-18
Figure 8-1.	Vertical Standard Deviation of Material in a Plume (σ_Z)	8-14
Figure 8-2.	Terrain Recirculation Factor (K_T)	8-15
Figure 8-3.	Plume Depletion Effect for Ground Level Releases	8-16
Figure 8-4.	Plume Depletion Effect for 30-Meter Releases	8-17
Figure 8-5.	Plume Depletion Effect for 60-Meter Releases	8-18
Figure 8-6.	Plume Depletion Effect for 100-Meter Releases	8-19
Figure 8-7.	Relative Deposition for Ground-Level Releases	8-20
Figure 8-8.	Relative Deposition for 30-Meter Releases	8-21
Figure 8-9.	Relative Deposition for 60-Meter Releases	8-22
Figure 8-10.	Relative Deposition for 100-Meter (or Greater) Releases	8-23
Figure 10-1.	Site Map for Effluent Controls	10-9

REFERENCES

1. J.S. Boegli, R.R. Bellamy, W.L. Britz, and R.L. Waterfield, "Preparation of Radiological Effluent Technical Specifications for Nuclear Power Plants," NUREG-0133, October 1978.

2. "Calculation of Annual Doses to Man from Routine Releases of Reactor Effluents for the Purpose of Evaluating Compliance with 10 CFR 50, Appendix I," U.S. NRC Regulatory Guide 1.109, March 1976.

3. "Calculation of Annual Doses to Man from Routine Releases of Reactor Effluents for the Purpose of Evaluating Compliance with 10 CFR 50, Appendix I," U.S. NRC Regulatory Guide 1.109, Revision 1, October 1977.

4. "Methods for Estimating Atmospheric Transport and Dispersion of Gaseous Effluents in Routine Releases from Light-Water-Cooled Reactors," U.S. NRC Regulatory Guide 1.111, March 1976.

5. "Methods for Estimating Atmospheric Transport and Dispersion of Gaseous Effluents in Routine Releases from Light-Water-Cooled Reactors," U.S. NRC Regulatory Guide 1.111, Revision 1, July 1977.

6. "Estimating Aquatic Dispersion of Effluents from Accidental and Routine Reactor Releases for the Purpose of Implementing Appendix I," U.S. NRC Regulatory Guide 1.113, April 1977.

7. Joseph M. Farley Nuclear Plant Units 1 and 2 Final Safety Analysis Report, Alabama Power Company.

8. Joseph M. Farley Nuclear Plant Units 1 and 2 Environmental Report - Operating License Stage, Alabama Power Company.

9. T.E. Young, T.S. Bohn, and W. Serrano, "Technical Evaluation Report for the Evaluation of ODCM Revision 7 for Joseph M. Farley Nuclear Plant, Units 1 and 2," EGG-PHY.8674, dated August 1989, transmitted by NRC letter dated November 9, 1989.

10. W.M. Jackson, "Survey Report of Chattahoochee River Water Use Downstream of Farley Nuclear Plant Liquid Effluent Discharge," dated July 19, 1990.

11. J.E. Till and H.R. Meyer, eds., Radiological Assessment, U.S. NRC Report NUREG/CR-3332, 1983.

12. L.A. Currie, Lower Limit of Detection: Definition and Elaboration of a Proposed Position of Radiological Effluent and Environmental Measurements, U.S. NRC Report NUREG/CR-4007, 1984.

13. "Radiological Assessment Branch Technical Position", U.S. Nuclear Regulatory Commission, Revision 1, November 1979.

14. U.S. DOE Report PNL-5484.

15. D.C. Kocher, "Radioactive Decay Data Tables," U.S. DOE Report DOE/TIC-11026, 1981.

16. Internal Memorandum, J.E. Garlington to D.N. Morey, Alabama Power Company, June 4, 1990.

17. W. W. Meinke and T. H. Essig, "Offsite Dose Calculation Manual Guidance: Standard Radiological Effluent Controls for Pressurized Water Reactors," NUREG-1301, April 1991.

18. {Joseph M. Farley Nuclear Plant Technical Specifications, Units 1 and 2.}

REFERENCES (Continued)

19. {Code of Federal Regulations, 10 CFR 50.4, "Written Communications."}

20. {Code of Federal Regulations, 10 CFR 50.72, "Immediate Notification Requirements for Operating Nuclear Power Reactors."}

21. {Code of Federal Regulations, 10 CFR 50.73, "Licensee Event Report System."}

22. {Joseph M. Farley Nuclear Plant Technical Requirements Manual (TRM).}

23. {Joseph M. Farley Nuclear Plant Quality Assurance Program.}

CHAPTER 1
INTRODUCTION

The Offsite Dose Calculation Manual is a supporting document of the Technical Specifications. As such, it describes the methodology and parameters to be used in the calculation of offsite doses due to radioactive liquid and gaseous effluents, and in the calculation of liquid and gaseous effluent monitoring instrumentation alarm setpoints. In addition, it contains the following:

- The controls required by the Technical Specifications, governing the radioactive effluent and radiological environmental monitoring programs.
- Schematics of liquid and gaseous radwaste effluent treatment systems, which include designation of release points to UNRESTRICTED AREAS.
- A list and maps indicating the specific sample locations for the Radiological Environmental Monitoring Program.
- Specifications and descriptions of the information that must be included in the Annual Radiological Environmental Operating Report and the Annual Radioactive Effluent Release Report {Radioactive Effluent Release Report} required by the Technical Specifications.

The ODCM will be maintained at the plant for use as a reference guide and training document of accepted methodologies and calculations. Changes in the calculational methods or parameters will be incorporated into the ODCM in order to ensure that it represents current methodology in all applicable areas. Any computer software used to perform the calculations described will be maintained current with the ODCM.

Equations and methods used in the ODCM are based on those presented in NUREG-0133 (Reference 1), in Regulatory Guide 1.109 (References 2 and 3), in Regulatory Guide 1.111 (References 4 and 5), and in Regulatory Guide 1.113 (Reference 6).

CHAPTER 2
LIQUID EFFLUENTS

2.1 LIMITS OF OPERATION

The following Liquid Effluent Controls implement requirements established by Technical Specifications Section 6.0 {5.0}. Terms printed in all capital letters are defined in Chapter 10.

2.1.1 Liquid Effluent Monitoring Instrumentation Control

In accordance with Technical Specification 6.8.3.e(i) {5.5.4.a}, the radioactive liquid effluent monitoring instrumentation channels shown in Table 2-1 shall be OPERABLE with their alarm/trip setpoints set to ensure that the limits specified in Section 2.1.2 are not exceeded. The alarm/trip setpoints of these channels shall be determined in accordance with Section 2.3.

2.1.1.1 Applicability

This limit applies at all times.

2.1.1.2 Actions

With a radioactive liquid effluent monitoring instrumentation channel alarm/trip setpoint less conservative than required by the above control, immediately suspend the release of radioactive liquid effluents monitored by the affected channel, declare the channel inoperable, or change the setpoint to a conservative value.

With less than the minimum number of radioactive liquid effluent monitoring instrumentation channels OPERABLE, take the ACTION shown in Table 2-1. Restore the inoperable instrumentation to OPERABLE status within 30 days and, if unsuccessful, explain in the next Annual Radioactive Effluent Release Report {Radioactive Effluent Release Report} pursuant to Section 7.2 why this inoperablility was not corrected in a timely manner.

This control does not affect shutdown requirements or MODE changes.

2.1.1.3 Surveillance Requirements

Each radioactive liquid effluent monitoring instrumentation channel shall be demonstrated OPERABLE by performance of the CHANNEL CHECK, SOURCE CHECK {source check}, CHANNEL CALIBRATION, and CHANNEL FUNCTIONAL TEST {CHANNEL OPERATIONAL TEST (COT)} operations at the frequencies shown in Table 2-2.

2.1.1.4 Basis

The radioactive liquid effluent instrumentation is provided to monitor and control, as applicable, the releases of radioactive materials in liquid effluents during actual or potential releases of liquid effluents. The Alarm/Trip Setpoints for these instruments shall be calculated and adjusted in accordance with the methodology and parameters in Section 2.3 to ensure that the alarm/trip will occur prior to exceeding the limits of Section 2.1.2. The OPERABILITY and use of this instrumentation is consistent with the requirements of General Design Criteria 60, 63, and 64 of Appendix A to 10 CFR Part 50.

Table 2-1. Radioactive Liquid Effluent Monitoring Instrumentation

Instrument	OPERABILITY Requirements[a]	
	Minimum Channels Operable	ACTION
1. Gross Radioactivity Monitors Providing Automatic Termination of Release		
a. Liquid Radwaste Effluent Line (RE-18)	1	28
b. Steam Generator Blowdown Effluent Line (RE-23B)	1	29
2. Flowrate Measurement Devices		
a. Liquid Radwaste Effluent Line		
1) Waste Monitor Tank No. 1	1	30
2) Waste Monitor Tank No. 2	1	30
b. Discharge Canal Dilution Line (Service Water)	1	30
c. Steam Generator Blowdown Effluent Line	1	30

a. All requirements in this table apply to each unit.

Table 2-1 (contd). Notation for Table 2-1 – ACTION Statements

ACTION 28 – With the number of channels OPERABLE less than required by the Minimum Channels OPERABLE requirement, effluent releases may continue provided that prior to initiating a release:

a. At least two independent samples are analyzed in accordance with Section 2.1.2.3, and

b. At least two technically qualified members of the Facility Staff independently verify the discharge line valving and

(1) Verify the manual portion of the computer input for the release rate calculations performed on the computer, or

(2) Verify the entire release rate calculations if such calculations are performed manually.

Otherwise, suspend release of radioactive effluents via this Pathway.

ACTION 29 – With the number of channels OPERABLE less than required by the Minimum Channels OPERABLE requirement, effluent releases via this pathway may continue provided grab samples are analyzed for gross radioactivity (beta or gamma) at a MINIMUM DETECTABLE CONCENTRATION no greater than 1×10^{-7} μCi/mL:

a. At least once per 8 hours when the specific activity of the secondary coolant is greater than 0.01 μCi/gram DOSE EQUIVALENT I-131.

b. At least once per 24 hours when the specific activity of the secondary coolant is less than or equal to 0.01 μCi/gram DOSE EQUIVALENT I-131.

ACTION 30 – With the number of channels OPERABLE less than required by the Minimum Channels OPERABLE requirement, effluent releases via this pathway may continue provided the flowrate is estimated at least once per 4 hours during actual releases. Pump curves may be used to estimate flow.

Table 2-2. Radioactive Liquid Effluent Monitoring Instrumentation Surveillance Requirements

Instrument	Surveillance Requirements[d]			
	CHANNEL CHECK	{Source Check} SOURCE CHECK	CHANNEL CALIBRATION	{CHANNEL OPERATIONAL TEST} CHANNEL FUNCTIONAL TEST
1. Gross Radioactivity Monitors Providing Automatic Termination of Release				
a. Liquid Radwaste Effluent Line (RE-18)	D	P	R[b]	Q[a]
b. Steam Generator Blowdown Effluent Line (RE-23B)	D	M	R[b]	Q[a]
2. Flowrate Measurement Devices				
a. Liquid Radwaste Effluent Line 1) Waste Monitor Tank No. 1	D[c]	NA	R	NA
2) Waste Monitor Tank No. 2	D[c]	NA	R	NA
b. Discharge Canal Dilution Line (Service Water)	D[c]	NA	R	Q
c. Steam Generator Blowdown Effluent Line	D[c]	NA	R	NA

Table 2-2 (contd). Notation for Table 2-2

a. In addition to the basic functions of a CHANNEL FUNCTIONAL TEST {CHANNEL OPERATIONAL TEST} (Section 10.2):

(1) The CHANNEL FUNCTIONAL TEST {CHANNEL OPERATIONAL TEST} shall also demonstrate that automatic isolation of this pathway and control room alarm annunciation occur if any of the following conditions exists:

(a) Instrument indicates measured levels above the alarm/trip setpoint;

(b) Loss of control power; or

(c) Instrument controls loss of instrument power.

(2) The CHANNEL FUNCTIONAL TEST {CHANNEL OPERATIONAL TEST} shall also demonstrate that control room alarm annunciation occurs if any of the following conditions exist:

(a) Instrument indicates a downscale failure; or

(b) Instrument controls not set in operate mode.

b. The initial CHANNEL CALIBRATION shall be performed using one or more of the reference standards certified by the National Institute of Standards and Technology or using standards that have been obtained from suppliers that participate in measurements assurance activities with NIST. For subsequent CHANNEL CALIBRATION, sources that have been related to the initial calibration shall be used.

c. CHANNEL CHECK shall consist of verifying indication of flow during periods of release. CHANNEL CHECK shall be made at least once per 24 hours on days on which continuous, periodic, or batch releases are made.

d. All requirements in this table apply to each unit.

2.1.2 Liquid Effluent Concentration Control

In accordance with Technical Specifications 6.8.3.e(ii) {5.5.4.b} and 6.8.3.e(iii) {5.5.4.c}, the concentration of radioactive material released in liquid effluents to UNRESTRICTED AREAS (see Figure 10-1) shall be limited at all times to ten times the concentrations specified in 10 CFR 20, Appendix B, Table 2, Column 2 for radionuclides other than dissolved or entrained noble gases. For dissolved or entrained noble gases, the concentration shall be limited to 1×10^{-4} μCi/mL total activity.

2.1.2.1 Applicability

This limit applies at all times.

2.1.2.2 Actions

With the concentration of radioactive material released in liquid effluents to UNRESTRICTED AREAS exceeding the limits stated in Section 2.1.2, immediately restore the concentration to within the stated limits.

This control does not affect shutdown requirements or MODE changes.

2.1.2.3 Surveillance Requirements

The radioactivity content of each batch of radioactive liquid waste shall be determined by sampling and analysis in accordance with Table 2-3. The results of radioactive analyses shall be used with the calculational methods in Section 2.3 to assure that the concentration at the point of release is maintained within the limits of Section 2.1.2.

2.1.2.4 Basis

This control is provided to ensure that the concentration of radioactive materials released in liquid waste effluents to UNRESTRICTED AREAS will be less than ten times the concentration levels specified in 10 CFR 20, Appendix B, Table 2, Column 2. This limitation provides additional assurance that the levels of radioactive materials in bodies of water in UNRESTRICTED AREAS will result in exposures within (1) the Section II.A design objectives of Appendix I, 10 CFR 50, to a MEMBER OF THE PUBLIC, and (2) the limits of 10 CFR 20.1301 to the population. The concentration limit for dissolved or entrained noble gases is based upon the assumption that Xe-135 is the controlling radioisotope and its MPC in air (submersion) was converted to an equivalent concentration in water using the methods described in International Commission on Radiological Protection

(ICRP) Publication 2 (1959). The resulting concentration of 2×10^{-4} was then multiplied by the ratio of the effluent concentration limit for Xe-135, stated in Appendix B, Table 2, Column 1 of 10 CFR 20 (paragraphs 20.1001 to 20.2401), to the MPC for Xe-135, stated in Appendix B, Table II, Column 1 of 10 CFR 20 (paragraphs 20.1 to 20.601), to obtain the limiting concentration of 1×10^{-4} μCi/mL.

Table 2-3. Radioactive Liquid Waste Sampling and Analysis Program

Liquid Release Type	Sampling and Analysis Requirements[a,b]			
	Sampling FREQUENCY	Minimum Analysis FREQUENCY	Type of Activity Analysis	MINIMUM DETECTABLE CONCENTRATION (MDC) (μCi/mL)
A. Waste Tanks Producing BATCH RELEASES				
All	P Each BATCH	P Each BATCH	PRINCIPAL GAMMA EMITTERS I-131	5 E-7 1 E-6
	P One BATCH/M	M	Dissolved and Entrained Gases (Gamma Emitters)	1 E-5
	P Each BATCH	M COMPOSITE	H-3 Gross Alpha	1 E-5 1 E-7
	P Each BATCH	Q COMPOSITE	Sr-89, Sr-90 Fe-55	5 E-8 1 E-6
B. CONTINUOUS RELEASES[c]				
Steam Generator Blowdown	D Grab Sample	W COMPOSITE	PRINCIPAL GAMMA EMITTERS I-131	5 E-7 1 E-6
	M Grab Sample	M	Dissolved and Entrained Gases (Gamma Emitters)	1 E-5
	D Grab Sample	M COMPOSITE	H-3 Gross Alpha	1 E-5 1 E-7
	D Grab Sample	Q COMPOSITE	Sr-89, Sr-90 Fe-55	5 E-8 1 E-6
Turbine Building Sump	P[d] Grab Sample	W COMPOSITE	PRINCIPAL GAMMA EMITTERS H-3	5 E-7 1 E-5

Table 2-3 (contd). Notation for Table 2-3

a. All requirements in this table apply to each unit. Deviation from the MDC requirements of this table shall be reported in accordance with Section 7.2.

b. Terms printed in all capital letters are defined in Chapter 10.

c. Sampling will be performed only if the effluent will be discharged to the environment.

d. Samples will be taken prior to or during each discharge.

2.1.3 Liquid Effluent Dose Control

In accordance with Technical Specifications 6.8.3.e(iv) {5.5.4.d} and 6.8.3.e(v) {5.5.4.e}, the dose or dose commitment to a MEMBER OF THE PUBLIC from radioactive materials in liquid effluents released, from each unit, to UNRESTRICTED AREAS (see Figure 10-1) shall be limited:

a. During any calendar quarter to less than or equal to 1.5 mrem to the total body and to less than or equal to 5 mrem to any organ, and

b. During any calendar year to less than or equal to 3 mrem to the total body and to less than or equal to 10 mrem to any organ.

2.1.3.1 Applicability

These limits apply at all times.

2.1.3.2 Actions

With the calculated dose from the release of radioactive materials in liquid effluents exceeding any of the limits of Section 2.1.3, prepare and submit to the Nuclear Regulatory Commission within 30 days, pursuant to Technical Specification 6.9.2 {10 CFR 50.4}, a Special Report which identifies the cause(s) for exceeding the limit(s); defines the corrective actions to be taken to reduce the releases; and defines the proposed corrective actions to be taken to assure that subsequent releases will be in compliance with the limits of Section 2.1.3.

This control does not affect shutdown requirements or MODE changes.

2.1.3.3 Surveillance Requirements

At least once per 31 days, cumulative dose contributions from liquid effluents for the current calendar quarter and the current calendar year shall be determined, for each unit, in accordance with Section 2.4.

2.1.3.4 Basis

This control is provided to implement the requirements of Sections II.A, III.A and IV.A of Appendix I, 10 CFR Part 50. The limits stated in Section 2.1.3 implement the guides set forth in Section II.A of Appendix I. The ACTIONS stated in Section 2.1.3.2 provide the required operating flexibility and at the same time implement the guides set forth in Section IV.A of Appendix I to assure that the releases of radioactive material in liquid effluents will be kept "as low as

is reasonably achievable." Also, for fresh water sites with drinking water supplies that can be potentially affected by plant operations, there is reasonable assurance that the operation of the facility will not result in radionuclide concentrations in the finished drinking water that are in excess of the requirements of 40 CFR Part 141. The dose calculations in Section 2.4 implement the requirements in Section III.A of Appendix I, which state that conformance with the guides of Appendix I be shown by calculational procedures based on models and data, such that the actual exposure of a MEMBER OF THE PUBLIC through appropriate pathways is unlikely to be substantially underestimated. The equations specified in Section 2.4 for calculating the doses due to the actual release rates of radioactive materials in liquid effluents are consistent with the methodology provided in Regulatory Guide 1.109 (Reference 3) and Regulatory Guide 1.113 (Reference 6).

This control applies to the release of liquid effluents from each unit at the site. The liquid effluents from shared LIQUID RADWASTE TREATMENT SYSTEMs are to be proportioned between the units.

2.1.4 Liquid Radwaste Treatment System Control

In accordance with Technical Specification 6.8.3.e(vi) {5.5.4.f}, the LIQUID RADWASTE TREATMENT SYSTEM shall be OPERABLE. The appropriate portions of the system shall be used to reduce radioactivity in liquid wastes prior to their discharge when the projected doses due to the liquid effluent, from each unit, to UNRESTRICTED AREAS (see Figure 10-1) would exceed 0.06 mrem to the total body or 0.2 mrem to any organ of a MEMBER OF THE PUBLIC in 31 days.

2.1.4.1 Applicability

This limit applies at all times.

2.1.4.2 Actions

With radioactive liquid waste being discharged without treatment and in excess of the above limits and appropriate portions of the LIQUID RADWASTE TREATMENT SYSTEM not in operation, prepare and submit to the Nuclear Regulatory Commission within 30 days pursuant to Technical Specification 6.9.2 {10 CFR 50.4}, a Special Report which includes the following information:

a. Explanation of why liquid radwaste was being discharged without treatment, identification of any inoperable equipment or subsystems, and the reason for the inoperability,

b. Action(s) taken to restore the inoperable equipment to OPERABLE status, and

c. Summary description of action(s) taken to prevent a recurrence.

This control does not affect shutdown requirements or MODE changes.

2.1.4.3 Surveillance Requirements

Doses due to liquid releases to UNRESTRICTED AREAS shall be projected at least once per 31 days, in accordance with Section 2.5, during periods in which the LIQUID RADWASTE TREATMENT SYSTEMs are not being fully utilized.

The LIQUID RADWASTE TREATMENT SYSTEM shall be demonstrated OPERABLE:

a. by meeting the controls of Sections 2.1.2 and 2.1.3, or

b. by operating the LIQUID RADWASTE TREATMENT SYSTEM equipment for at least 15 minutes at least once per 92 days unless the LIQUID RADWASTE TREATMENT SYSTEM equipment has been utilized to process radioactive liquid effluents during the previous 92 days.

2.1.4.4 Basis

The OPERABILITY of the LIQUID RADWASTE TREATMENT SYSTEM ensures that this system will be available for use whenever liquid effluents require treatment prior to release to the UNRESTRICTED AREAS. The requirement that the appropriate portions of this system be used when specified provides assurance that the releases of radioactive materials in liquid effluents will be kept "as low as is reasonably achievable." This control implements the requirements of 10 CFR Part 50.36a, General Design Criterion 60 of Appendix A to 10 CFR Part 50, and the design objective given in Section II.D of Appendix I to 10 CFR Part 50. The specified limits governing the use of appropriate portions of the LIQUID RADWASTE TREATMENT SYSTEM were specified as a suitable fraction of the dose design objectives set forth in Section II.A of Appendix I, 10 CFR Part 50, for liquid effluents.

2.1.5 Major Changes to Liquid Radioactive Waste Treatment Systems

Licensee initiated MAJOR CHANGES TO LIQUID RADIOACTIVE WASTE TREATMENT SYSTEMS:

a. Shall be reported to the Nuclear Regulatory Commission in the Annual Radioactive Effluent Release Report {Radioactive Effluent Release Report} for the period in which the change was implemented, in accordance with Section 7.2.2.7.

b. Shall become effective upon review and approval in accordance with Technical Specification 6.5.3.1 {the FNP Quality Assurance Program}.

2.2 LIQUID RADWASTE TREATMENT SYSTEM

The Farley Nuclear Plant is located on the west bank of the Chattahoochee River approximately 35 river miles above the point where it empties into Lake Seminole. There are two pressurized water reactors on the site. Each unit is served by a completely separate LIQUID RADWASTE TREATMENT SYSTEM that is illustrated schematically in Figure 2-1. However, both units share a common demineralizer bed system for processing liquids prior to release from the site. As shown in Figure 2-2, the Steam Generator Blowdown System is a separate entity. Liquid discharge pathways are shown in Figure 2-3.

All liquid radwastes treated by the LIQUID RADWASTE TREATMENT SYSTEM are collected in 5,000-gallon Waste Monitor Tanks for sampling and analysis prior to release. Prior to sampling, each waste monitor tank is recirculated for a minimum of two tank content volumes, to ensure that a representative sample can be taken from the tank. Releases from the waste monitor tanks are routed to the Service Water discharge line (which provides dilution prior to release to the UNRESTRICTED AREA), and thence to the Chattahoochee River. The Service Water discharge line also receives input from the Cooling Tower Blowdown and the Turbine Building Sump.

Although no significant quantities of radioactivity are expected in the steam generator blowdown processing system, this effluent pathway is monitored as a precautionary measure. The monitors serving this pathway provide for automatic termination of release in the event that radioactivity is detected above predetermined levels. Like the LIQUID RADWASTE TREATMENT SYSTEMs, the Steam Generator Blowdown Systems discharge to the Service Water discharge line.

One potential release pathway, the Turbine Building Sump discharge, is not monitored during release, but is sampled regularly during discharges. Sampling and analysis of releases via this pathway must be sufficient to ensure that the liquid effluent dose limits specified in Section 2.1.3 are not exceeded.

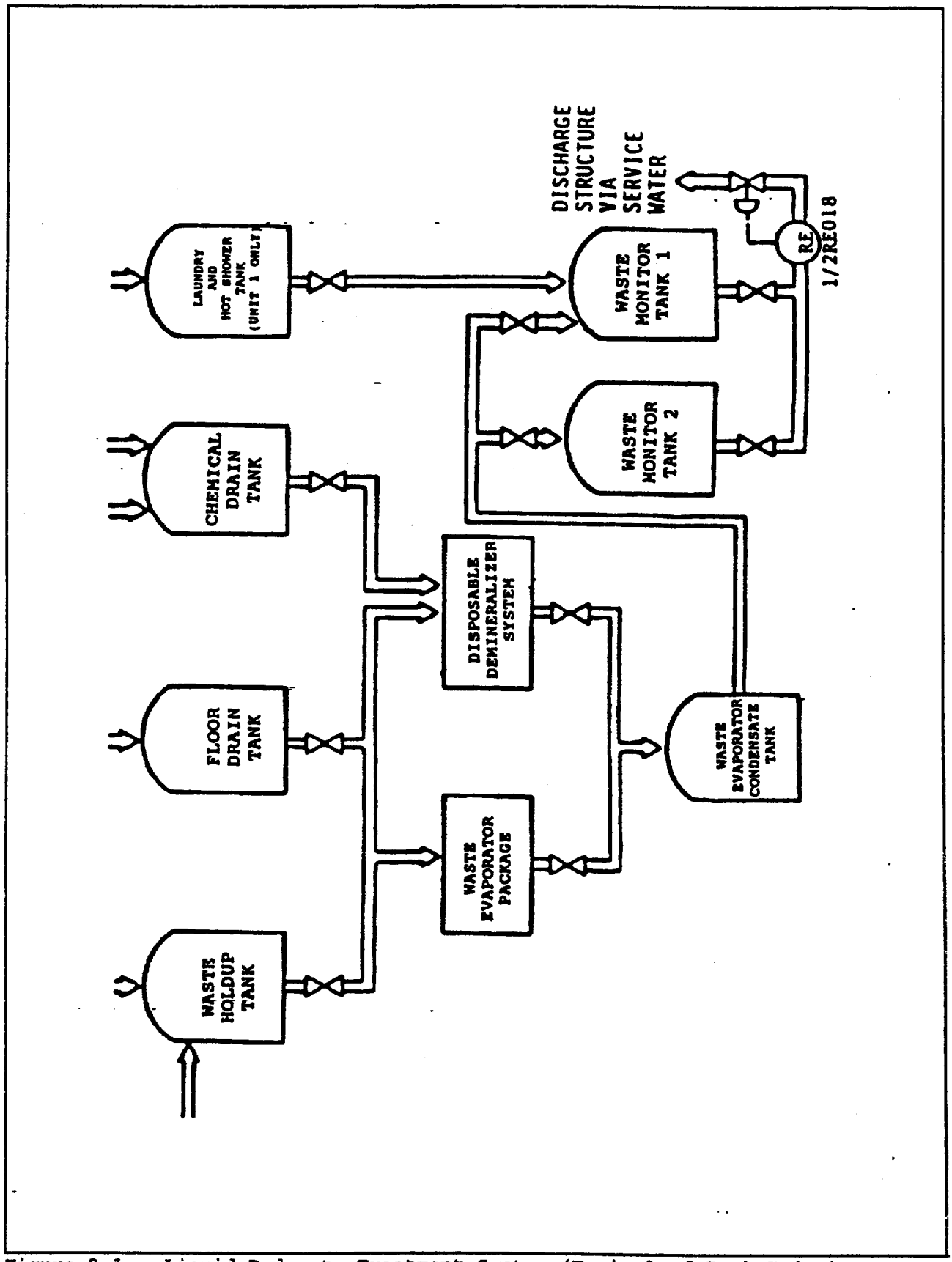

Figure 2-1. Liquid Radwaste Treatment System (Typical of Both Units)

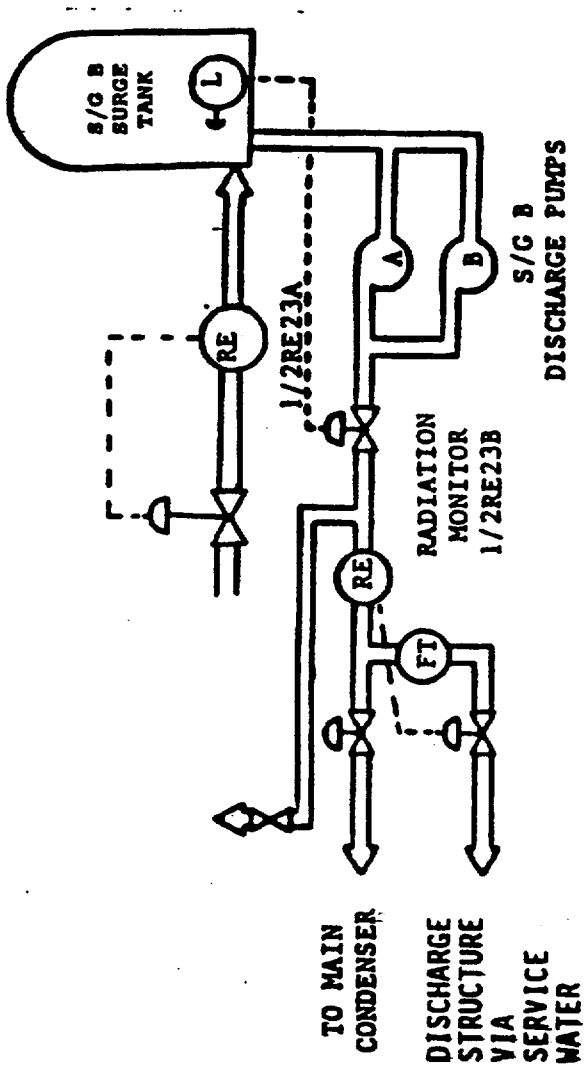

Figure 2-2. Steam Generator Blowdown System (Typical of Both Units)

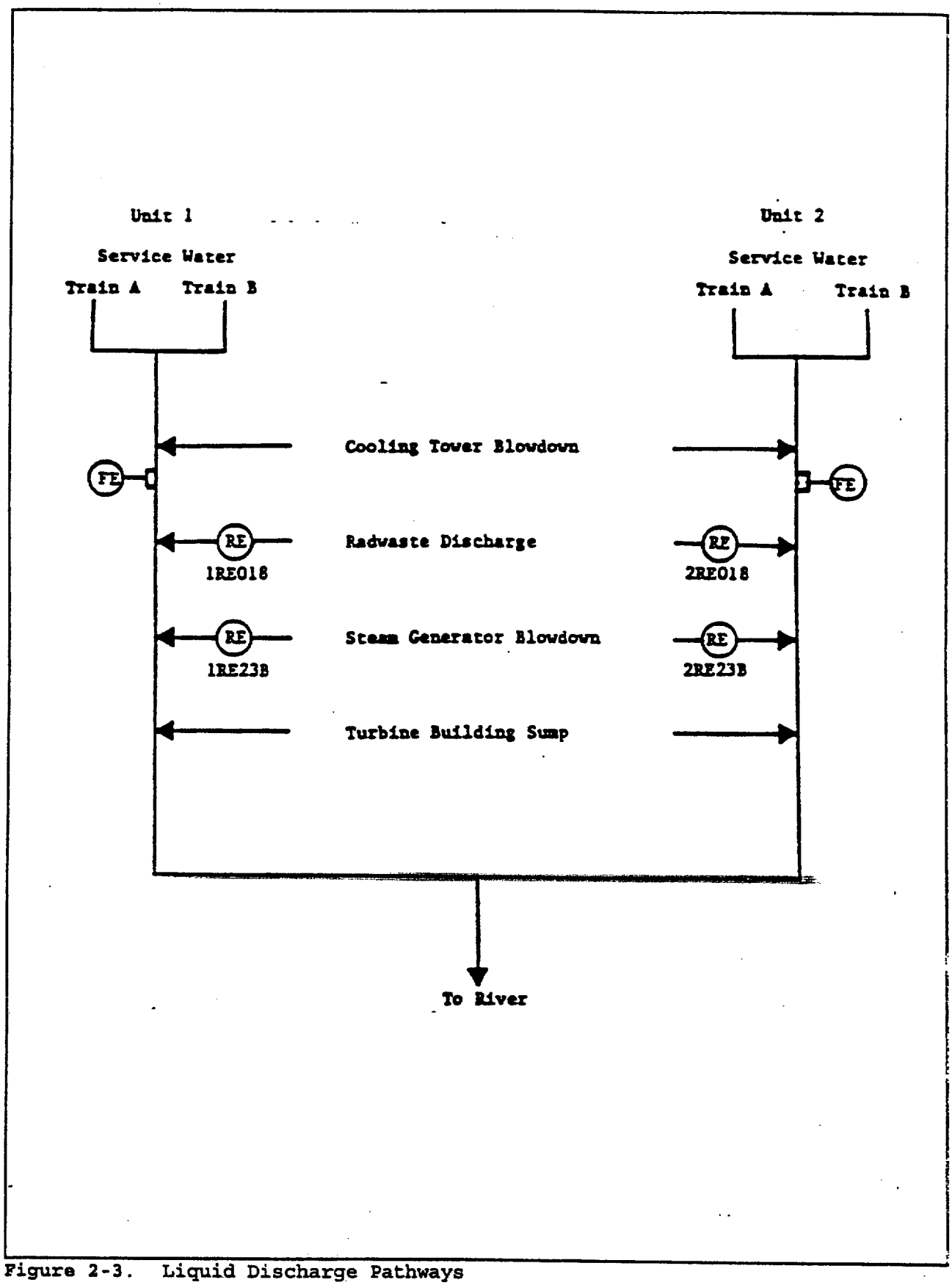

Figure 2-3. Liquid Discharge Pathways

2.3 LIQUID EFFLUENT MONITOR SETPOINTS

2.3.1 General Provisions Regarding Setpoints

Liquid monitor setpoints calculated in accordance with the methodology presented in this section will be regarded as upper bounds for the actual high alarm setpoints. That is, a lower value for the high alarm setpoint may be established or retained on the monitor, if desired. Intermediate level setpoints should be established at an appropriate level to give sufficient warning prior to reaching the high alarm setpoint. If no release is planned for a particular pathway, or if there is no detectable activity in the planned release, the monitor setpoint should be established as close to background as practical to prevent spurious alarms, and yet alarm should an inadvertent release occur.

Two basic setpoint methodologies are presented below. For radwaste system discharge monitors, setpoints are determined to assure that the limits of Section 2.1.2 are not exceeded. For monitors on streams that are not expected to contain significant radioactivity, the purpose of the monitor setpoints is to cause an alarm on low levels of radioactivity, and to terminate the release where this is possible. Section 2.1.1 establishes the requirements for liquid effluent monitoring instrumentation. Table 2-4 lists the monitors for which each of the setpoint methodologies is applicable.

Table 2-4. Applicability of Liquid Monitor Setpoint Methodologies

Liquid Radwaste Discharge Monitors

Setpoint Method: Section 2.3.2

Unit 1 or Unit 2 Waste Monitor Tanks Effluent

Release Type:	BATCH
Monitor:	1RE-018 / 2RE-018

Unit 1 or Unit 2 Steam Generator Blowdown Effluent

Release Type:	CONTINUOUS
Monitor:	1RE-023 B / 2RE-023 B

Normally Low-Radioactivity Streams with Termination or Diversion upon Alarm

Farley Nuclear Plant has no liquid effluent streams in this category.

Normally Low-Radioactivity Streams with Alarm Only

Farley Nuclear Plant has no liquid effluent streams in this category.

2.3.2 Setpoints for Radwaste System Discharge Monitors

2.3.2.1 Overview of Method

LIQUID RADWASTE TREATMENT SYSTEM effluent line radioactivity monitors are intended to provide alarm and automatic termination of release prior to exceeding the limits specified in Section 2.1.2 at the point of release of the diluted effluent into the UNRESTRICTED AREA. Therefore, their alarm/trip setpoints are established to ensure compliance with the following equation (equation adapted from Addendum to Reference 1):

$$\frac{c \cdot f}{F + f} \leq TF \cdot C_{ECL} \qquad (2.1)$$

where:

C_{ECL} = the Effluent Concentration Limit corresponding to the mix of radionuclides in the effluent being considered for discharge, in μCi/mL.

c = the setpoint, in μCi/mL, of the radioactivity monitor measuring the concentration of radioactivity in the effluent line prior to dilution and subsequent release. The setpoint represents a concentration which, if exceeded, could result in concentrations exceeding the limits of Section 2.1.2 in the UNRESTRICTED AREA.

f = the effluent flowrate at the location of the radioactivity monitor, in gpm.

F = the dilution stream flowrate which can be assured prior to the release point to the UNRESTRICTED AREA, in gpm. A predetermined dilution flowrate must be assured for use in the calculation of the radioactivity monitor setpoint.

TF = the tolerance factor selected to allow flexibility in the establishment of a practical monitor setpoint which could accommodate effluent releases at concentrations higher than the ECL values stated in 10 CFR 20, Appendix B, Table 2, Column 2; the tolerance factor must not exceed a value of 10.

While equation (2.1) shows the relationships of the critical parameters that determine the setpoint, it cannot be applied practically to a mixture of radio-

nuclides with different Effluent Concentration Limits (ECLs). For a mixture of radionuclides, equation (2.1) is satisfied in a practicable manner based on the calculated ECL fraction of the radionuclide mixture and the dilution stream flowrate that can be assured for the duration of the release (F_d), by calculating the maximum permissible effluent flowrate (f_m) and the radioactivity monitor setpoint (c).

The setpoint method presented below is applicable to the release of only one tank of liquid radwaste per reactor unit at a given time. Liquid releases must be controlled administratively to ensure that this condition is met; otherwise, the setpoint method may not ensure that the limits of Section 2.1.2 are not exceeded.

2.3.2.2 Setpoint Calculation Steps

Step 1: Determine the radionuclide concentrations in the liquid waste being considered for release in accordance with the sampling and analysis requirements of Section 2.1.2.

To ensure that sample analyses are based on samples that are representative of the waste being sampled, the liquid volume must be mixed thoroughly prior to sampling. Mixing may be accomplished by any method that has been demonstrated to achieve sufficient mixing for representative sampling. The Waste Monitor Tanks are recirculated for a minimum of two tank content volumes prior to sampling. The Service Water discharge line is assumed to be well mixed, so that no additional mixing is required prior to sampling.

The total concentration of the liquid waste is determined by the results of all required analyses on the collected sample, as follows:

$$\sum_i C_i = C_a + \sum_s C_s + C_f + C_t + \sum_g C_g \qquad (2.2)$$

where:

C_a = the gross concentration of alpha emitters in the liquid waste, not less than that measured in the most recent applicable composite sample.

C_s = the concentration of strontium radioisotope s (Sr-89 or Sr-90) in the liquid waste, not less than that measured in the most recent applicable composite sample.

C_f = the concentration of Fe-55 in the liquid waste, not less than that measured in the most recent applicable composite sample.

C_t = the concentration of H-3 in the liquid waste, not less than that measured in the most recent applicable composite sample.

C_g = the concentration of gamma emitter g in the liquid waste as measured by gamma ray spectroscopy performed on the sample for the release under consideration.

The C_g term will be included in the analysis of each waste sample; terms for gross concentrations of alpha emitters, Sr-89, Sr-90, Fe-55, and tritium will be included in accordance with the sampling and analysis program required for the waste stream (see Section 2.1.2). For each analysis, only radionuclides identified and detected above background for the given measurement should be included in the calculation. When using the alternate setpoint methodology of step 5.b, the historical maximum values of C_a, C_s, C_f, and C_t shall be used.

<u>Step 2</u>: Determine the required dilution factor for the mix of radionuclides detected in the waste.

Measured radionuclide concentrations are used to calculate ECL fractions. The ECL fractions are used along with a safety factor to calculate the required dilution factor; this is the minimum ratio of dilution flowrate to waste flowrate that must be maintained throughout the release to ensure that the Effluent Concentration Limits of Section 2.1.2 are not exceeded at the point of discharge into the UNRESTRICTED AREA. The required dilution factor, RDF, is calculated as the sum of the dilution factors required for gamma emitters (RDF_γ) and for non-gamma-emitters ($RDF_{n\gamma}$):

$$RDF = \left[\sum_i \frac{C_i}{ECL_i} \right] \div [(SF)\ (TF)] \qquad (2.3)$$

$$= RDF_\gamma + RDF_{n\gamma}$$

$$RDF_\gamma = \frac{\left[\sum_g \frac{C_g}{ECL_g} \right]}{(SF)\ (TF)} \qquad (2.4)$$

$$RDF_{n\gamma} = \frac{\left[\frac{C_a}{ECL_a} + \sum_s \frac{C_s}{ECL_s} + \frac{C_f}{ECL_f} + \frac{C_t}{ECL_t} \right]}{(SF) \quad (TF)} \tag{2.5}$$

where:

C_i = the measured concentration of radionuclide i as defined in step 1, in μCi/mL. The C_a, C_s, C_f, and C_t terms will be included in the calculation as appropriate.

ECL_i = the Effluent Concentration Limit for radionuclide i from 10 CFR Part 20, Appendix B, Table 2, Column 2 (except for noble gases as discussed below). In the absence of information regarding the solubility classification of a given radionuclide in the waste stream, the solubility class with the lowest ECL shall be assumed. For dissolved or entrained noble gases, the concentration shall be limited to 1×10^{-4} μCi/mL. For gross alpha, the ECL shall be 2×10^{-9} μCi/mL; if specific alpha-emitting radionuclides are measured, the ECL for the specific radionuclide(s) should be used.

SF = the safety factor selected to compensate for statistical fluctuations and errors of measurement. The value for the safety factor must be between 0 and 1. A value of 0.5 is reasonable for liquid releases; a more precise value may be developed if desired.

TF = the tolerance factor (as defined in Section 2.3.2.1).

Step 3: Determine the release-specific assured dilution stream flowrate.

Determine the dilution stream flowrate that can be assured during the release period, designated F_d.

If simultaneous radioactive releases are planned from the same reactor unit, the unit's dilution stream must be allocated among all the simultaneous releases, whether or not they are monitored during release. Normally, only the Waste Monitor Tank and Steam Generator Blowdown effluents need be considered, unless there is detectable radioactivity in one of the normally low-radioactivity streams (see Table 2-4), or in the Turbine Building Sump. Allocation of the dilution stream to multiple release paths is accomplished as follows:

where:

$$F_{dp} = F_d \, (AF_p) \tag{2.6}$$

F_{dp} = the dilution flowrate allocated to release pathway p, in gpm.

AF_p = the dilution allocation factor for release pathway p. AF_p may be assigned any value between 0 and 1 for each active release pathway, under the condition that the sum of the AF_p for all active release pathways for *each unit* does not exceed 1. [Note: Because the two units have separate dilution streams, the two units do not affect each other with respect to dilution allocation.]

F_d = the assured minimum dilution flowrate for the unit, in gpm.

If more precise allocation factor values are desired, they may be determined based on the relative radiological impact of each active release pathway; this may be approximated by multiplying the RDF of each effluent stream by its respective planned release flowrate, and comparing these values. If only one release pathway for a given reactor unit contains detectable radioactivity, its AF_p may be assigned the value of 1, making F_{dp} equal to F_d.

For the case where RDF ≤ 1, the planned release meets the limits of Section 2.1.2 without dilution, and may be released with any desired effluent flowrate and dilution flowrate.

<u>Step 4</u>: Determine the maximum allowable waste discharge flowrate.

For the case where RDF > 1, the maximum permissible effluent discharge flowrate for this release pathway, f_{mp} (in gpm), is calculated as follows:

$$f_{mp} = \frac{F_{dp}}{(RDF - 1)} \tag{2.7}$$

For the case RDF ≤ 1, equation (2.7) is not valid. However, as discussed above, when RDF ≤ 1, the release may be made at full discharge pump capacity; the radioactivity monitor setpoint must still be calculated in accordance with Step 5 below.

NOTE 1: Discharge flowrates are actually limited by the discharge pump capacity. When the calculated maximum permissible release flowrate exceeds the pump capacity, the release may be made at full capacity. Discharge flowrates less than the pump capacity must be

achieved by throttling if this is available; if throttling is not available, the release may not be made as planned.

NOTE 2: If, at the time of the planned release, there is detectable radioactivity due to plant operations in the dilution stream, the diluting capacity of the dilution stream is diminished. (In addition, sampling and analysis of the other radioactive effluents affecting the dilution stream must be sufficient to ensure that the liquid effluent dose limits specified in the controls of Section 2.1.3 are not exceeded.) Under these conditions, equation (2.7) must be modified to account for the radioactivity present in the dilution stream prior to the introduction of the planned release:

$$f_{mp} = \frac{F_{dp}}{(RDF - 1)} \left(1 - \sum_r \left[\frac{f_r}{F_d} \sum_i \left(\frac{C_{ir}}{ECL_i} \right) \right] \right) \qquad (2.8)$$

where:

C_{ir} = the measured concentration of radionuclide i in release pathway r that is contributing to radioactivity in the dilution stream.

f_r = the effluent discharge flowrate of release pathway r.

If the entire dilution stream contains detectable activity due to plant operations, whether or not its source is identified, $f_r = F_d$, and C_{ir} is the concentration in the total dilution system. This note does not apply: a) if the RDF of the planned release is ≤ 1; or b) if the release contributing radioactivity to the dilution stream has been accounted for by the assignment of an allocation factor.

Step 5: Determine the maximum radioactivity monitor setpoint concentration.

Based on the values determined in previous steps, the radioactivity monitor setpoint for the planned release is calculated to ensure that the limits of Section 2.1.2 will not be exceeded. Because the radioactivity monitor responds primarily to gamma radiation, the monitor setpoint c_p for release pathway p (in μCi/mL) is based on the concentration of gamma emitters in the waste stream, as follows:

$$c_p = A_p \sum_g c_g \tag{2.9}$$

where:

A_p = an adjustment factor which will allow the setpoint to be established in a practical manner to prevent spurious alarms while allowing a margin between measured concentrations and the limits of Section 2.1.2.

Step 5.a. If the concentration of gamma emitters in the effluent to be released is sufficient that the high alarm setpoint can be established at a level that will prevent spurious alarms, A_p should be calculated as follows:

$$\begin{aligned} A_p &= \frac{1}{RDF} \times ADF \\ &= \frac{1}{RDF} \times \frac{(F_{dp} + f_{ap})}{f_{ap}} \end{aligned} \tag{2.10}$$

where:

ADF = the assured dilution factor.

f_{ap} = the anticipated actual discharge flowrate for the planned release (in gpm), a value less than f_{mp}. The release must then be controlled so that the actual effluent discharge flowrate does not exceed f_{ap} at any time.

Step 5.b. Alternatively, A_p may be calculated as follows:

$$A_p = \frac{ADF - RDF_{n\gamma}}{RDF_{\gamma}} \tag{2.11}$$

Step 5.c. Evaluate the computed value of A_p as follows:

If $A_p \geq 1$, calculate the monitor setpoint, c_p. However, if c_p is within about 10 percent of C_g, it may be impractical to

use this value of c_p. This situation indicates that measured concentrations are approaching values which would cause the limits of Section 2.1.2 to be exceeded. Therefore, steps should be taken to reduce potential concentrations at the point of discharge; these steps may include decreasing the planned effluent discharge flowrate, increasing the dilution stream flowrate, postponing simultaneous releases, and/or decreasing the effluent concentrations by further processing the liquid planned for release. Alternatively, allocation factors for the active liquid release pathways may be reassigned. When one or more of these actions has been taken, repeat Steps 1-5 to calculate a new radioactivity monitor setpoint.

If $A_p < 1$, the release may not be made as planned. Consider the alternatives discussed in the paragraph above, and calculate a new setpoint based on the results of the actions taken.

2.3.2.3 Use of the Calculated Setpoint

The setpoint calculated above is in the units μCi/mL. The monitor actually measures a count rate that includes background, so that the calculated setpoint must be converted accordingly:

$$c_p^* = c_p \cdot E_p + B_p \qquad \textbf{(2.8a)}$$

where:

c_p^* = the monitor setpoint as a count rate.

E_p = the monitor calibration factor, in count rate/(μCi/mL). Monitor calibration data for conversion between count rate and concentration may include operational data obtained from determining the monitor response to stream concentrations measured by liquid sample analysis.

B_p = the monitor background count rate. In all cases, monitor background must be controlled so that the monitor is capable of responding to concentrations in the range of the setpoint value.

The count rate units of c_p^*, E_p, and B_p in equation (2.8a) must be the same (cpm or cps).

2.3.3 Setpoints for Monitors on Normally Low-Radioactivity Streams

Radioactivity in these streams (listed in Table 2-4 above) is expected to be at very low levels, generally below detection limits. Accordingly, the purpose of these monitors is to alarm upon the occurrence of significant radioactivity in these streams, and to terminate or divert the release where this is possible.

2.3.3.1 Normal Conditions

When radioactivity in one of these streams is at its normal low level, its radioactivity monitor setpoint should be established as close to background as practical to prevent spurious alarms, and yet alarm should an inadvertent release occur.

2.3.3.2 Conditions Requiring an Elevated Setpoint

Under the following conditions, radionuclide concentrations must be determined and an elevated radioactivity monitor setpoint determined for these pathways:

- For streams that can be diverted or isolated, a new monitor setpoint must be established when it is desired to discharge the stream directly to the dilution water even though the radioactivity in the stream exceeds the level which would normally be diverted or isolated.

- For streams that cannot be diverted or isolated, a new monitor setpoint must be established whenever: the radioactivity in the stream becomes detectable above the background levels of the applicable laboratory analyses; or the associated radioactivity monitor detects activity in the stream at levels above the established alarm setpoint.

When an elevated monitor setpoint is required for any of these effluent streams, it should be determined in the same manner as described in Section 2.3.2. However, special consideration must be given to Step 3. An allocation factor must be assigned to the normally low-radioactivity release pathway under consideration, and allocation factors for other release pathways discharging simultaneously must be adjusted downward (if necessary) to ensure that the sum of the allocation factors does not exceed 1. Sampling and analysis of the normally low-radioactivity streams must be sufficient to ensure that the liquid effluent dose limits specified in the controls of Section 2.1.3 are not exceeded.

2.4 LIQUID EFFLUENT DOSE CALCULATIONS

The following sub-sections present the methods required for liquid effluent dose calculations, in deepening levels of detail. Applicable site-specific pathways and parameter values for the calculation of D_τ, $A_{i\tau}$, and CF_{iv} are summarized in Table 2-5.

2.4.1 Calculation of Dose

The dose limits for a MEMBER OF THE PUBLIC specified in Section 2.1.3 are on a per-unit basis. Therefore, the doses calculated in accordance with this section must be determined and recorded on a per-unit basis, including apportionment of releases shared between the two units.

For the purpose of implementing Section 2.1.3, the dose to the maximum exposed individual due to radionuclides identified in liquid effluents released from each unit to UNRESTRICTED AREAS will be calculated as follows (equation from Reference 1, page 15):

$$D_\tau = \sum_i A_{i\tau} \left[\sum_{l=1}^{m} \left(\Delta t_l \, C_{il} \, F_l \right) \right] \qquad (2.12)$$

where:

D_τ = the cumulative dose commitment to the total body or to any organ τ, in mrem, due to radioactivity in liquid effluents released during the total of the m time periods Δt_l.

$A_{i\tau}$ = the site-related adult ingestion dose commitment factor, for the total body or for any organ τ, due to identified radionuclide i, in (mrem·mL)/(h·μCi). Methods for the calculation of $A_{i\tau}$ are presented below in Section 2.4.2. The values of $A_{i\tau}$ to be used in dose calculations for releases from the plant site are listed in Table 2-8.

Δt_l = the length of time period l, over which C_{il} and F_l are averaged for liquid releases, in h.

C_{il} = the average concentration of radionuclide i in undiluted liquid effluent during time period l, in μCi/mL. Only radionuclides

identified and detected above background in their respective samples should be included in the calculation.

F_l = the near-field average dilution factor in the receiving water of the UNRESTRICTED AREA:

$$F_l = \frac{f_t}{F_t \times Z} \qquad (2.13)$$

where:

f_t = the average undiluted liquid waste flowrate actually observed during the period of radioactivity release, in gpm.

F_t = the average dilution stream flowrate actually observed during the period of radioactivity release, in gpm.

Z = the applicable dilution factor for the receiving water body, in the near field of the discharge structure, during the period of radioactivity release, from Table 2-5.

NOTE: In equation (2.13), the product ($F_t \times Z$) is limited to 1000 cfs (= 448,000 gpm) or less. (Reference 1, Section 4.3.)

2.4.2 Calculation of $A_{i\tau}$

The site-related adult ingestion dose commitment factor, $A_{i\tau}$, is calculated as follows (equation adapted from Reference 1, page 16, by addition of the irrigated garden vegetation pathway):

$$A_{i\tau} = 1.14 \times 10^5 \left(\frac{U_w}{D_w} e^{-\lambda_i t_w} + U_f BF_i e^{-\lambda_i t_f} + U_v CF_{iv} \right) DF_{i\tau} \qquad (2.14)$$

where:

1.14×10^5 = a units conversion factor, determined by:
10^6 pCi/μCi $\times$ 10^3 mL/L $\div$ 8760 h/y.

U_w = the adult drinking water consumption rate applicable to the plant site (L/y).

D_w = the dilution factor from the near field of the discharge structure for the plant site to the potable water intake location.

λ_i = the decay constant for radionuclide i (h^{-1}). Values of λ_i used in effluent calculations should be based on decay data from a recognized and current source, such as Reference 15.

t_w = the transit time from release to receptor for potable water consumption (h).

U_f = the adult rate of fish consumption applicable to the plant site (kg/y).

BF_i = the bioaccumulation factor for radionuclide i applicable to freshwater fish in the receiving water body for the plant site, in (pCi/kg)/(pCi/L) = (L/kg). For specific values applicable to the plant site, see Table 2-6.

t_f = the transit time from release to receptor for fish consumption (h).

U_v = the adult consumption rate for irrigated garden vegetation applicable to the plant site (kg/y).

CF_{iv} = the concentration factor for radionuclide i in irrigated garden vegetation, as applicable to the vicinity of the plant site, in (pCi/kg)/(pCi/L). Methods for calculation of CF_{iv} are presented below in Section 2.4.3.

$DF_{i\tau}$ = the dose conversion factor for radionuclide i for adults, in organ τ (mrem/pCi). For specific values, see Table 2-7.

2.4.3 Calculation of CF_{iv}

The concentration factor for radionuclide i in irrigated garden vegetation, CF_{iv} in (L/kg), is calculated as follows:

- For radionuclides other than tritium (equation adapted from Reference 3, equations A-8 and A-9):

$$CF_{iv} = M \cdot I \left[\frac{r\,(1 - e^{-\lambda_{Ei}\, t_e})}{Y_v\, \lambda_{Ei}} + \frac{f_I\, B_{iv}\,(1 - e^{-\lambda_i\, t_b})}{P\, \lambda_i} \right] e^{-\lambda_i\, t_h} \qquad (2.15)$$

- For tritium (equation adapted from Reference 3, equations A-9 and A-10):

$$CF_{iv} = M \cdot L_v \qquad (2.16)$$

where:

M = the additional river dilution factor from the near field of the discharge structure for the plant site to the point of irrigation water usage.

I = the average irrigation rate during the growing season (L)/($m^2 \cdot h$).

r = the fraction of irrigation-deposited activity retained on the edible portions of leafy garden vegetation.

Y_v = the areal density (agricultural productivity) of leafy garden vegetation (kg/m^2)

f_I = the fraction of the year that garden vegetation is irrigated.

B_{iv} = the crop to soil concentration factor applicable to radionuclide i, from Table 2-6 (pCi/kg garden vegetation)/(pCi/kg soil).

P = the effective surface density of soil (kg/m^2).

λ_i = the decay constant for radionuclide i (h^{-1}). Values of λ_i used in effluent calculations should be based on decay data from a recognized and current source, such as Reference 15.

λ_w = the rate constant for removal of activity from plant leaves by weathering (h^{-1}).

λ_{Ei} = the effective removal rate for activity deposited on crop leaves (h^{-1}) calculated as: $\lambda_{Ei} = \lambda_i + \lambda_w$.

t_e = the period of leafy garden vegetation exposure during the growing season (h).

t_b = the period of long-term buildup of activity in soil (h).

t_h = the time between harvest of garden vegetation and human consumption (h).

L_v = the water content of leafy garden vegetation edible parts (L/kg).

Table 2-5. Parameters for Calculation of Doses Due to Liquid Effluent Releases

Dose Calculation Receptor Locations:

Fish:	Vicinity of plant discharge
Drinking Water:	None (Ref. 10)
Irrigated Garden Vegetation:	Farms at River Mile 26 (Ref. 10)

Numerical Parameters:

Parameter	Value	Reference
Z	5	Ref. 2, Table A-1
U_w	0 L/y *	Ref. 10
D_w	1.0 *	Based on Ref. 1, Section 4.3.1
t_w	12 h *	Ref. 3, Sec. A.2
U_f	21 kg/y	Ref. 3, Table E-5
t_f	24 h	Ref. 3, Sec. A.2
U_v	64 kg/y	Ref. 3, Table E-5
M	0.04	Ref. 16
I	0.126 $L/(m^2 \cdot h)$	Ref. 10, using pump capacity, garden size, and irrigation 10% of the time during growing season.
r	0.25	Ref. 3, Table E-15
Y_v	2.0 kg/m^2	Ref. 3, Table E-15
f_I	0.1	Ref. 10
P	240 kg/m^2	Ref. 3, Table E-15
λ_w	0.0021 h^{-1} (i.e., half-life = 14 d)	Ref. 3, Table E-15
t_e	1440 h (= 60 d)	Ref. 3, Table E-15
t_b	1.31×10^5 h (= 15 y)	Ref. 3, Table E-15
t_h	24 h	Ref. 3, Table E-15
L_v	0.92 L/kg	Based on Ref. 11, Table 5.16 (for lettuce, cabbage, etc.)

* Because there is no drinking water pathway downstream of the plant site, the consumption of drinking water is set to zero, and the default values of t_w and D_w are used.

Table 2-6. Element Transfer Factors

Element	Freshwater Fish BF_i*	Leafy Garden Vegetation B_{iv}+
H	9.0 E-01	4.8 E+00
C	4.6 E+03	5.5 E+00
Na	1.0 E+02	5.2 E-02
P	3.0 E+03	1.1 E+00
Cr	2.0 E+02	2.5 E-04
Mn	2.0 E+01	2.9 E-02
Fe	1.0 E+03	6.6 E-04
Co	1.0 E+02	9.4 E-03
Ni	1.0 E+02	1.9 E-02
Cu	1.5 E+02	1.2 E-01
Zn	1.0 E+02	4.0 E-01
Br	4.2 E+02	7.6 E-01
Rb	2.0 E+03	1.3 E-01
Sr	3.0 E+01	1.7 E-02
Y	2.5 E+01	2.6 E-03
Zr	2.0 E+02	1.7 E-04
Nb	1.0 E+02	9.4 E-03
Mo	1.0 E+02	1.2 E-01
Tc	1.5 E+01	2.5 E-01
Ru	1.0 E+01	5.0 E-02
Rh	1.0 E+01	1.3 E+01
Ag	2.3 E+00	1.5 E-01
Sb	3.0 E+02	1.1 E-02
Te	2.0 E+03	1.3 E+00
I	2.0 E+01	2.0 E-02
Cs	2.0 E+02	1.0 E-02
Ba	4.0 E+01	5.0 E-03
La	2.5 E+01	2.5 E-03
Ce	2.0 E+02	2.5 E-03
Pr	2.5 E+01	2.5 E-03
Nd	2.5 E+01	2.4 E-03
W	1.2 E+03	1.8 E-02
Np	1.0 E+01	2.5 E-03

* Bioaccumulation Factors for freshwater fish, in (pCi/kg)/(pCi/L). They are obtained from Reference 3 (Table A-1), except as follows: Reference 9 for P; Reference 2 (Table A-8) for Ag; Reference 8 for Mn, Fe, Co, Cu, Zn, Mo, Sb, Te, I, Cs, Ba, and Ce; and Reference 14 for Zr and Nb.

\+ Crop to soil concentration factors, in (pCi/kg garden vegetation) per (pCi/kg soil). They are obtained from Reference 3 (Table E-1), except as follows: Reference 2 (Table C-5) for Br and Sb.

Table 2-7. Adult Ingestion Dose Factors

Nuclide	Bone	Liver	T. Body	Thyroid	Kidney	Lung	GI-LLI
H-3	No Data	1.05E-07	1.05E-07	1.05E-07	1.05E-07	1.05E-07	1.05E-07
Na-24	1.70E-06	1.70E-06	1.70E-06	1.70E-06	1.70E-06	1.70E-06	1.70E-06
Cr-51	No Data	No Data	2.66E-09	1.59E-09	5.86E-10	3.53E-09	6.69E-07
Mn-54	No Data	4.57E-06	8.72E-07	No Data	1.36E-06	No Data	1.40E-05
Mn-56	No Data	1.15E-07	2.04E-08	No Data	1.46E-07	No Data	3.67E-06
Fe-55	2.75E-06	1.90E-06	4.43E-07	No Data	No Data	1.06E-06	1.09E-06
Fe-59	4.34E-06	1.02E-05	3.91E-06	No Data	No Data	2.85E-06	3.40E-05
Co-58	No Data	7.45E-07	1.67E-06	No Data	No Data	No Data	1.51E-05
Co-60	No Data	2.14E-06	4.72E-06	No Data	No Data	No Data	4.02E-05
Ni-63	1.30E-04	9.01E-06	4.36E-06	No Data	No Data	No Data	1.88E-06
Ni-65	5.28E-07	6.86E-08	3.13E-08	No Data	No Data	No Data	1.74E-06
Cu-64	No Data	8.33E-08	3.91E-08	No Data	2.10E-07	No Data	7.10E-06
Zn-65	4.84E-06	1.54E-05	6.96E-06	No Data	1.03E-05	No Data	9.70E-06
Zn-69	1.03E-08	1.97E-08	1.37E-09	No Data	1.28E-08	No Data	2.96E-09
Br-83	No Data	No Data	4.02E-08	No Data	No Data	No Data	5.79E-08
Br-84	No Data	No Data	5.21E-08	No Data	No Data	No Data	4.09E-13
Br-85	No Data	No Data	2.14E-09	No Data	No Data	No Data	No Data
Rb-86	No Data	2.11E-05	9.83E-06	No Data	No Data	No Data	4.16E-06
Rb-88	No Data	6.05E-08	3.21E-08	No Data	No Data	No Data	8.36E-19
Rb-89	No Data	4.01E-08	2.82E-08	No Data	No Data	No Data	2.33E-21
Sr-89	3.08E-04	No Data	8.84E-06	No Data	No Data	No Data	4.94E-05
Sr-90	7.58E-03	No Data	1.86E-03	No Data	No Data	No Data	2.19E-04
Sr-91	5.67E-06	No Data	2.29E-07	No Data	No Data	No Data	2.70E-05

All values are in (mrem/pCi ingested). They are obtained from Reference 3 (Table E-11), except as follows: Reference 2 (Table A-3) for Rh-105, Sb-124, and Sb-125.

Table 2-7 (contd). Adult Ingestion Dose Factors

Nuclide	Bone	Liver	T.Body	Thyroid	Kidney	Lung	GI-LLI
Sr-92	2.15E-06	No Data	9.30E-08	No Data	No Data	No Data	4.26E-05
Y-90	9.62E-09	No Data	2.58E-10	No Data	No Data	No Data	1.02E-04
Y-91m	9.09E-11	No Data	3.52E-12	No Data	No Data	No Data	2.67E-10
Y-91	1.41E-07	No Data	3.77E-09	No Data	No Data	No Data	7.76E-05
Y-92	8.45E-10	No Data	2.47E-11	No Data	No Data	No Data	1.48E-05
Y-93	2.68E-09	No Data	7.40E-11	No Data	No Data	No Data	8.50E-05
Zr-95	3.04E-08	9.75E-09	6.60E-09	No Data	1.53E-08	No Data	3.09E-05
Zr-97	1.68E-09	3.39E-10	1.55E-10	No Data	5.12E-10	No Data	1.05E-04
Nb-95	6.22E-09	3.46E-09	1.86E-09	No Data	3.42E-09	No Data	2.10E-05
Mo-99	No Data	4.31E-06	8.20E-07	No Data	9.76E-06	No Data	9.99E-06
Tc-99m	2.47E-10	6.98E-10	8.89E-09	No Data	1.06E-08	3.42E-10	4.13E-07
Tc-101	2.54E-10	3.66E-10	3.59E-09	No Data	6.59E-09	1.87E-10	1.10E-21
Ru-103	1.85E-07	No Data	7.97E-08	No Data	7.06E-07	No Data	2.16E-05
Ru-105	1.54E-08	No Data	6.08E-09	No Data	1.99E-07	No Data	9.42E-06
Ru-106	2.75E-06	No Data	3.48E-07	No Data	5.31E-06	No Data	1.78E-04
Rh-105	1.22E-07	8.86E-08	5.83E-08	No Data	3.76E-07	No Data	1.41E-05
Ag-110m	1.60E-07	1.48E-07	8.79E-08	No Data	2.91E-07	No Data	6.04E-05
Sb-124	2.81E-06	5.30E-08	1.11E-06	6.79E-09	No Data	2.18E-06	7.95E-05
Sb-125	2.23E-06	2.40E-08	4.48E-07	1.98E-09	No Data	2.33E-04	1.97E-05
Te-125m	2.68E-06	9.71E-07	3.59E-07	8.06E-07	1.09E-05	No Data	1.07E-05
Te-127m	6.77E-06	2.42E-06	8.25E-07	1.73E-06	2.75E-05	No Data	2.27E-05
Te-127	1.10E-07	3.95E-08	2.38E-08	8.15E-08	4.48E-07	No Data	8.68E-06
Te-129m	1.15E-05	4.29E-06	1.82E-06	3.95E-06	4.80E-05	No Data	5.79E-05
Te-129	3.14E-08	1.18E-08	7.65E-09	2.41E-08	1.32E-07	No Data	2.37E-08
Te-131m	1.73E-06	8.46E-07	7.05E-07	1.34E-06	8.57E-06	No Data	8.40E-05
Te-131	1.97E-08	8.23E-09	6.22E-09	1.62E-08	8.63E-08	No Data	2.79E-09

Table 2-7 (contd). Adult Ingestion Dose Factors

Nuclide	Bone	Liver	T.Body	Thyroid	Kidney	Lung	GI-LLI
Te-132	2.52E-06	1.63E-06	1.53E-06	1.80E-06	1.57E-05	No Data	7.71E-05
I-130	7.56E-07	2.23E-06	8.80E-07	1.89E-04	3.48E-06	No Data	1.92E-06
I-131	4.16E-06	5.95E-06	3.41E-06	1.95E-03	1.02E-05	No Data	1.57E-06
I-132	2.03E-07	5.43E-07	1.90E-07	1.90E-05	8.65E-07	No Data	1.02E-07
I-133	1.42E-06	2.47E-06	7.53E-07	3.63E-04	4.31E-06	No Data	2.22E-06
I-134	1.06E-07	2.88E-07	1.03E-07	4.99E-06	4.58E-07	No Data	2.51E-10
I-135	4.43E-07	1.16E-06	4.28E-07	7.65E-05	1.86E-06	No Data	1.31E-06
Cs-134	6.22E-05	1.48E-04	1.21E-04	No Data	4.79E-05	1.59E-05	2.59E-06
Cs-136	6.51E-06	2.57E-05	1.85E-05	No Data	1.43E-05	1.96E-06	2.92E-06
Cs-137	7.97E-05	1.09E-04	7.14E-05	No Data	3.70E-05	1.23E-05	2.11E-06
Cs-138	5.52E-08	1.09E-07	5.40E-08	No Data	8.01E-08	7.91E-09	4.65E-13
Ba-139	9.70E-08	6.91E-11	2.84E-09	No Data	6.46E-11	3.92E-11	1.72E-07
Ba-140	2.03E-05	2.55E-08	1.33E-06	No Data	8.67E-09	1.46E-08	4.18E-05
Ba-141	4.71E-08	3.56E-11	1.59E-09	No Data	3.31E-11	2.02E-11	2.22E-17
Ba-142	2.13E-08	2.19E-11	1.34E-09	No Data	1.85E-11	1.24E-11	3.00E-26
La-140	2.50E-09	1.26E-09	3.33E-10	No Data	No Data	No Data	9.25E-05
La-142	1.28E-10	5.82E-11	1.45E-11	No Data	No Data	No Data	4.25E-07
Ce-141	9.36E-09	6.33E-09	7.18E-10	No Data	2.94E-09	No Data	2.42E-05
Ce-143	1.65E-09	1.22E-06	1.35E-10	No Data	5.37E-10	No Data	4.56E-05
Ce-144	4.88E-07	2.04E-07	2.62E-08	No Data	1.21E-07	No Data	1.65E-04
Pr-143	9.20E-09	3.69E-09	4.56E-10	No Data	2.13E-09	No Data	4.03E-05
Pr-144	3.01E-11	1.25E-11	1.53E-12	No Data	7.05E-12	No Data	4.33E-18
Nd-147	6.29E-09	7.27E-09	4.35E-10	No Data	4.25E-09	No Data	3.49E-05
W-187	1.03E-07	8.61E-08	3.01E-08	No Data	No Data	No Data	2.82E-05
Np-239	1.19E-09	1.17E-10	6.45E-11	No Data	3.65E-10	No Data	2.40E-05

Table 2-8. Site-Related Ingestion Dose Factors, $A_{i\tau}$

Nuclide	Bone	Liver	T. Body	Thyroid	Kidney	Lung	GI-LLI
H-3	0.00	2.54E-01	2.54E-01	2.54E-01	2.54E-01	2.54E-01	2.54E-01
Na-24	1.34E+02	1.34E+02	1.34E+02	1.34E+02	1.34E+02	1.34E+02	1.34E+02
Cr-51	0.00	0.00	1.25E+00	7.45E-01	2.74E-01	1.65E+00	3.13E+02
Mn-54	0.00	2.28E+02	4.34E+01	0.00	6.77E+01	0.00	6.97E+02
Mn-56	0.00	8.69E-03	1.54E-03	0.00	1.10E-02	0.00	2.77E-01
Fe-55	6.58E+03	4.55E+03	1.06E+03	0.00	0.00	2.54E+03	2.61E+03
Fe-59	1.02E+04	2.41E+04	9.22E+03	0.00	0.00	6.72E+03	8.02E+04
Co-58	0.00	1.78E+02	3.99E+02	0.00	0.00	0.00	3.61E+03
Co-60	0.00	5.17E+02	1.14E+03	0.00	0.00	0.00	9.71E+03
Ni-63	3.14E+04	2.18E+03	1.05E+03	0.00	0.00	0.00	4.54E+02
Ni-65	1.72E-01	2.23E-02	1.02E-02	0.00	0.00	0.00	5.66E-01
Cu-64	0.00	8.07E+00	3.79E+00	0.00	2.04E+01	0.00	6.88E+02
Zn-65	1.17E+03	3.71E+03	1.68E+03	0.00	2.48E+03	0.00	2.34E+03
Zn-69	3.94E-08	7.54E-08	5.24E-09	0.00	4.90E-08	0.00	1.13E-08
Br-83	0.00	0.00	3.83E-02	0.00	0.00	0.00	5.52E-02
Br-84	0.00	0.00	1.22E-12	0.00	0.00	0.00	9.61E-18
Br-85	0.00	0.00	0.00	0.00	0.00	0.00	0.00
Rb-86	0.00	9.74E+04	4.54E+04	0.00	0.00	0.00	1.92E+04
Rb-88	0.00	0.00	0.00	0.00	0.00	0.00	0.00
Rb-89	0.00	0.00	0.00	0.00	0.00	0.00	0.00
Sr-89	2.23E+04	0.00	6.41E+02	0.00	0.00	0.00	3.58E+03
Sr-90	5.61E+05	0.00	1.38E+05	0.00	0.00	0.00	1.62E+04
Sr-91	7.07E+01	0.00	2.86E+00	0.00	0.00	0.00	3.37E+02
Sr-92	3.33E-01	0.00	1.44E-02	0.00	0.00	0.00	6.60E+00
Y-90	4.47E-01	0.00	1.20E-02	0.00	0.00	0.00	4.74E+03
Y-91m	1.04E-11	0.00	4.01E-13	0.00	0.00	0.00	3.04E-11
Y-91	8.58E+00	0.00	2.30E-01	0.00	0.00	0.00	4.72E+03
Y-92	4.60E-04	0.00	1.35E-05	0.00	0.00	0.00	8.07E+00
Y-93	3.09E-02	0.00	8.54E-04	0.00	0.00	0.00	9.81E+02
Zr-95	1.45E+01	4.64E+00	3.14E+00	0.00	7.27E+00	0.00	1.47E+04
Zr-97	3.01E-01	6.07E-02	2.77E-02	0.00	9.16E-02	0.00	1.88E+04
Nb-95	1.47E+00	8.17E-01	4.39E-01	0.00	8.08E-01	0.00	4.96E+03
Mo-99	0.00	8.03E+02	1.53E+02	0.00	1.82E+03	0.00	1.86E+03
Tc-99m	5.60E-04	1.58E-03	2.02E-02	0.00	2.40E-02	7.76E-04	9.37E-01

All values are in (mrem·mL)/(h·μCi). They are calculated using equation (2.14), and data from Table 2-5, Table 2-6, and Table 2-7. When "No Data" is shown for a radionuclide-organ combination in Table 2-7, $A_{i\tau}$ factors in this table are presented as zero.

Table 2-8 (contd). Site-Related Ingestion Dose Factors, $A_{i\tau}$

Nuclide	Bone	Liver	T. Body	Thyroid	Kidney	Lung	GI-LLI
Tc-101	0.00	0.00	0.00	0.00	0.00	0.00	0.00
Ru-103	4.65E+00	0.00	2.00E+00	0.00	1.77E+01	0.00	5.42E+02
Ru-105	8.71E-03	0.00	3.44E-03	0.00	1.13E-01	0.00	5.33E+00
Ru-106	7.14E+01	0.00	9.03E+00	0.00	1.38E+02	0.00	4.62E+03
Rh-105	1.84E+00	1.34E+00	8.80E-01	0.00	5.68E+00	0.00	2.13E+02
Ag-110m	1.20E+00	1.11E+00	6.61E-01	0.00	2.19E+00	0.00	4.54E+02
Sb-124	2.00E+03	3.77E+01	7.90E+02	4.83E+00	0.00	1.55E+03	5.66E+04
Sb-125	1.61E+03	1.73E+01	3.22E+02	1.43E+00	0.00	1.68E+05	1.42E+04
Te-125m	1.27E+04	4.60E+03	1.70E+03	3.81E+03	5.16E+04	0.00	5.06E+04
Te-127m	3.22E+04	1.15E+04	3.93E+03	8.23E+03	1.31E+05	0.00	1.08E+05
Te-127	8.89E+01	3.19E+01	1.92E+01	6.59E+01	3.62E+02	0.00	7.01E+03
Te-129m	5.40E+04	2.01E+04	8.54E+03	1.85E+04	2.25E+05	0.00	2.72E+05
Te-129	8.89E-05	3.34E-05	2.17E-05	6.82E-05	3.74E-04	0.00	6.71E-05
Te-131m	4.76E+03	2.33E+03	1.94E+03	3.69E+03	2.36E+04	0.00	2.31E+05
Te-131	4.32E-16	1.80E-16	1.36E-16	3.55E-16	1.89E-15	0.00	6.12E-17
Te-132	9.75E+03	6.31E+03	5.92E+03	6.97E+03	6.08E+04	0.00	2.98E+05
I-130	9.44E+00	2.78E+01	1.10E+01	2.36E+03	4.34E+01	0.00	2.40E+01
I-131	1.86E+02	2.66E+02	1.52E+02	8.71E+04	4.56E+02	0.00	7.01E+01
I-132	7.02E-03	1.88E-02	6.57E-03	6.57E-01	2.99E-02	0.00	3.53E-03
I-133	3.06E+01	5.33E+01	1.62E+01	7.83E+03	9.30E+01	0.00	4.79E+01
I-134	2.91E-08	7.92E-08	2.83E-08	1.37E-06	1.26E-07	0.00	6.90E-11
I-135	1.71E+00	4.49E+00	1.66E+00	2.96E+02	7.20E+00	0.00	5.07E+00
Cs-134	2.99E+04	7.11E+04	5.81E+04	0.00	2.30E+04	7.64E+03	1.24E+03
Cs-136	2.96E+03	1.17E+04	8.42E+03	0.00	6.51E+03	8.92E+02	1.33E+03
Cs-137	3.83E+04	5.24E+04	3.43E+04	0.00	1.78E+04	5.92E+03	1.01E+03
Cs-138	9.12E-13	1.80E-12	8.92E-13	0.00	1.32E-12	1.31E-13	7.68E-18
Ba-139	5.64E-05	4.02E-08	1.65E-06	0.00	3.76E-08	2.28E-08	1.00E-04
Ba-140	1.86E+03	2.34E+00	1.22E+02	0.00	7.95E-01	1.34E+00	3.83E+03
Ba-141	0.00	0.00	0.00	0.00	0.00	0.00	0.00
Ba-142	0.00	0.00	0.00	0.00	0.00	0.00	0.00
La-140	9.93E-02	5.01E-02	1.32E-02	0.00	0.00	0.00	3.68E+03
La-142	2.19E-07	9.96E-08	2.48E-08	0.00	0.00	0.00	7.27E-04
Ce-141	4.40E+00	2.98E+00	3.38E-01	0.00	1.38E+00	0.00	1.14E+04
Ce-143	4.77E-01	3.53E+02	3.91E-02	0.00	1.55E-01	0.00	1.32E+04
Ce-144	2.34E+02	9.79E+01	1.26E+01	0.00	5.80E+01	0.00	7.91E+04
Pr-143	5.33E-01	2.14E-01	2.64E-02	0.00	1.23E-01	0.00	2.33E+03
Pr-144	0.00	0.00	0.00	0.00	0.00	0.00	0.00
Nd-147	3.59E-01	4.15E-01	2.48E-02	0.00	2.43E-01	0.00	1.99E+03
W-187	1.47E+02	1.23E+02	4.30E+01	0.00	0.00	0.00	4.03E+04
Np-239	2.15E-02	2.11E-03	1.17E-03	0.00	6.60E-03	0.00	4.34E+02

2.5 LIQUID EFFLUENT DOSE PROJECTIONS

2.5.1 Thirty-One Day Dose Projections

In order to meet the requirements for operation of the LIQUID RADWASTE TREATMENT SYSTEM (see Section 2.1.4), dose projections must be made at least once each 31 days; this applies during periods in which a discharge to UNRESTRICTED AREAS of liquid effluents containing radioactive materials occurs or is expected.

Projected 31-day doses to individuals due to liquid effluents may be determined as follows:

$$D_{\tau p} = \left(\frac{D_{\tau c}}{t}\right) \times 31 + D_{\tau a} \qquad (2.17)$$

where:

$D_{\tau p}$ = the projected dose to the total body or organ τ, for the next 31 days of liquid releases.

$D_{\tau c}$ = the cumulative dose to the total body or organ τ, for liquid releases that have occurred in the elapsed portion of the current quarter, plus the release under consideration.

t = the number of whole or partial days elapsed into the current quarter, including the time to the end of the release under consideration (even if the release continues into the next quarter).

$D_{\tau a}$ = the anticipated dose contribution to the total body or any organ τ, due to any planned activities during the next 31-day period, if those activities will result in liquid releases that are in addition to routine liquid effluents. If only routine liquid effluents are anticipated, $D_{\tau a}$ may be set to zero.

2.5.2 Dose Projections for Specific Releases

Dose projections may be performed for a particular release by performing a pre-release dose calculation assuming that the planned release will proceed as anticipated. For individual dose projections due to liquid releases, follow the methodology of Section 2.4, using sample analysis results for the source to be released, and parameter values expected to exist during the release period.

2.6 DEFINITIONS OF LIQUID EFFLUENT TERMS

The following symbolic terms are used in the presentation of liquid effluent calculations in the sub-sections above.

Term	Definition	Section of Initial Use
A_p =	the adjustment factor used in calculating the effluent monitor setpoint for liquid release pathway p: the ratio of the assured dilution to the required dilution [unitless].	2.3.2.2
ADF =	the assured dilution factor for a planned release [unitless].	2.3.2.2
AF_p =	the dilution allocation factor for liquid release pathway p [unitless].	2.3.2.2
$A_{i\tau}$ =	the site-related adult ingestion dose commitment factor, for the total body or for any organ τ, due to identified radionuclide i [(mrem·mL)/(h·μCi)]. The values of $A_{i\tau}$ are listed in Table 2-8.	2.4.1
B_{iv} =	the crop to soil concentration factor applicable to radionuclide i, [(pCi/kg garden vegetation)/(pCi/kg soil)]. Values are listed in Table 2-6.	2.4.3
BF_i =	the bioaccumulation factor for radionuclide i for freshwater fish [(pCi/kg)/(pCi/L)]. Values are listed in Table 2-6.	2.4.2
c =	the setpoint of the radioactivity monitor measuring the concentration of radioactivity in the effluent line, prior to dilution and subsequent release [μCi/mL].	2.3.2.1
c_p =	the calculated effluent radioactivity monitor setpoint for liquid release pathway p [μCi/mL].	2.3.2.2
C_a =	the gross concentration of alpha emitters in the liquid waste as measured in the applicable composite sample [μCi/mL].	2.3.2.2

Term	Definition	Section of Initial Use
C_{ECL} =	the Effluent Concentration Limit stated in 10 CFR 20, Appendix B, Table 2, Column 2 [μCi/mL].	2.3.2.1
C_f =	the concentration of Fe-55 in the liquid waste as measured in the applicable composite sample [μCi/mL].	2.3.2.2
C_g =	the concentration of gamma emitter g in the liquid waste as measured by gamma ray spectroscopy performed on the applicable pre-release waste sample [μCi/mL].	2.3.2.2
C_i =	the measured concentration of radionuclide i in a sample of liquid effluent [μCi/mL].	2.3.2.2
C_{il} =	the average concentration of radionuclide i in undiluted liquid effluent during time period l [μCi/mL].	2.4.1
C_{ir} =	the measured concentration of radionuclide i in release pathway r that is contributing to radioactivity in the dilution stream [μCi/mL].	2.3.2.2
C_s =	the concentration of strontium radioisotope s (Sr-89 or Sr-90) in the liquid waste as measured in the applicable composite sample [μCi/mL].	2.3.2.2
C_t =	the concentration of H-3 in the liquid waste as measured in the applicable composite sample [μCi/mL].	2.3.2.2
CF_{iv} =	the concentration factor for radionuclide i in irrigated garden vegetation [(pCi/kg)/(pCi/L)].	2.4.2
D_w =	the dilution factor from the near field of the discharge structure to the potable water intake location [unitless].	2.4.2

Term	Definition	Section of Initial Use
D_τ =	the cumulative dose commitment to the total body or to any organ τ, due to radioactivity in liquid effluents released during a given time period [mrem].	2.4.1
$D_{\tau a}$ =	the anticipated dose contribution to the total body or any organ τ, due to any planned activities during the next 31-day period [mrem].	2.5.1
$D_{\tau c}$ =	the cumulative dose to the total body or organ τ, for liquid releases that have occurred in the elapsed portion of the current quarter, plus the release under consideration [mrem].	2.5.1
$D_{\tau p}$ =	the projected dose to the total body or organ τ, for the next 31 days of liquid releases [mrem].	2.5.1
$DF_{i\tau}$ =	the dose conversion factor for radionuclide i for adults, in organ τ [mrem/pCi]. Values are listed in Table 2-7.	2.4.2
ECL_i =	the liquid Effluent Concentration Limit for radionuclide i from 10 CFR Part 20, Appendix B, Table 2, Column 2 [μCi/mL].	2.3.2.2
f =	the effluent flowrate at the location of the radioactivity monitor [gpm].	2.3.2.1
f_{ap} =	the anticipated actual discharge flowrate for a planned release from liquid release pathway p [gpm].	2.3.2.2
f_I =	the fraction of the year that garden vegetation is irrigated [unitless].	2.4.3
f_{mp} =	the maximum permissible effluent discharge flowrate for release pathway p [gpm].	2.3.2.2

Term	Definition	Section of Initial Use
f_r =	the effluent discharge flowrate of release pathway r [gpm].	2.3.2.2
f_t =	the average undiluted liquid waste flowrate actually observed during the period of a liquid release [gpm].	2.4.1
F =	the dilution stream flowrate which can be assured prior to the release point to the UNRESTRICTED AREA [gpm].	2.3.2.1
F_d =	the entire assured dilution flowrate for the plant site during the release period [gpm].	2.3.2.2
F_{dp} =	the dilution flowrate allocated to release pathway p [gpm].	2.3.2.2
F_l =	the near-field average dilution factor in the receiving water of the UNRESTRICTED AREA [unitless].	2.4.1
F_t =	the average dilution stream flowrate actually observed during the period of a liquid release [gpm].	2.4.1
I =	the average irrigation rate during the growing season [$L/(m^2 \cdot h)$].	2.4.3
L_v =	the water content of leafy garden vegetation edible parts [L/kg].	2.4.3
M =	the additional river dilution factor from the near field of the discharge structure for the plant site to the point of irrigation water usage [unitless].	2.4.3
P =	the effective surface density of soil [kg/m^2].	2.4.3

Term	Definition	Section of Initial Use
r =	the fraction of irrigation-deposited activity retained on the edible portions of leafy garden vegetation.	2.4.3
RDF =	the required dilution factor: the minimum ratio by which liquid effluent must be diluted before reaching the UNRESTRICTED AREA, in order to ensure that the limits of Section 2.1.2 are not exceeded [unitless].	2.3.2.2
RDF_{γ} =	the RDF for a liquid release due only to its concentration of gamma-emitting radionuclides [unitless].	2.3.2.2
$RDF_{n\gamma}$ =	the RDF for a liquid release due only to its concentration of non-gamma-emitting radionuclides [unitless].	2.3.2.2
SF =	the safety factor selected to compensate for statistical fluctuations and errors of measurement [unitless].	2.3.2.2
t =	the number of whole or partial days elapsed into the current quarter, including the time to the end of the release under consideration.	2.5.1
t_b =	the period of long-term buildup of activity in soil [h].	2.4.3
t_e =	the period of leafy garden vegetation exposure during the growing season [h].	2.4.3
t_f =	the transit time from release to receptor for fish consumption [h].	2.4.2
t_h =	the time between harvest of garden vegetation and human consumption [h].	2.4.3
t_w =	the transit time from release to receptor for potable water consumption [h].	2.4.2

Term	Definition	Section of Initial Use
TF =	the tolerance factor selected to allow flexibility in the establishment of a practical monitor setpoint which could accommodate effluent releases at concentrations higher than the ECL values stated in 10 CFR 20, Appendix B, Table 2, Column 2 [unitless]; the tolerance factor must not exceed a value of 10.	3.3.2.2
U_f =	the adult rate of fish consumption [kg/y].	2.4.2
U_v =	the adult consumption rate for irrigated garden vegetation [kg/y].	2.4.2
U_w =	the adult drinking water consumption rate applicable to the plant site [L/y].	2.4.2
Y_v =	the areal density (agricultural productivity) of leafy garden vegetation [kg/m^2].	2.4.3
Z =	the applicable dilution factor for the receiving water body, in the near field of the discharge structure, during the period of radioactivity release [unitless].	2.4.1
Δt_l =	the length of time period l, over which C_{il} and F_l are averaged for liquid releases [h].	2.4.1
λ_{Ei} =	the effective removal rate for activity deposited on crop leaves [h^{-1}].	2.4.3
λ_i =	the decay constant for radionuclide i [h^{-1}].	2.4.2
λ_w =	the rate constant for removal of activity from plant leaves by weathering [h^{-1}].	2.4.3

CHAPTER 3
GASEOUS EFFLUENTS

3.1 LIMITS OF OPERATION

The following Limits of Operation implement requirements established by Technical Specifications Section 6.0 {5.0}. Terms printed in all capital letters are defined in Chapter 10.

3.1.1 Gaseous Effluent Monitoring Instrumentation Control

In accordance with Technical Specification 6.8.3.e(i) {5.5.4.a}, the radioactive gaseous effluent monitoring instrumentation channels shown in Table 3-1 shall be OPERABLE with their alarm/trip setpoints set to ensure that the limits of Section 3.1.2.a are not exceeded. The alarm/trip setpoints of these channels shall be determined in accordance with Section 3.3.

3.1.1.1 Applicability

These limits apply as shown in Table 3-1.

3.1.1.2 Actions

With a radioactive gaseous effluent monitoring instrumentation channel alarm/trip setpoint less conservative than required by the above control, immediately suspend the release of radioactive gaseous effluents monitored by the affected channel, declare the channel inoperable, or restore the setpoint to a value that will ensure that the limits of Section 3.1.2.a are met.

With less than the minimum number of radioactive gaseous effluent monitoring instrumentation channels OPERABLE, take the ACTION shown in Table 3-1. Restore the inoperable instrumentation to OPERABLE status within 30 days and, if unsuccessful, explain in the next Annual Radioactive Effluent Release Report {Radioactive Effluent Release Report} pursuant to Section 7.2 why this inoperability was not corrected in a timely manner.

This control does not affect shutdown requirements or MODE changes.

3.1.1.3 Surveillance Requirements

Each radioactive gaseous effluent monitoring instrumentation channel shall be demonstrated OPERABLE by performance of the CHANNEL CHECK, SOURCE CHECK {source check}, CHANNEL CALIBRATION and CHANNEL FUNCTIONAL TEST {CHANNEL OPERATIONAL TEST (COT)} operations at the frequencies shown in Table 3-2.

3.1.1.4 Basis

The radioactive gaseous effluent instrumentation is provided to monitor and control, as applicable, the releases of radioactive materials in gaseous effluents during actual or potential releases of gaseous effluents. The Alarm/Trip Setpoints for these instruments shall be calculated and adjusted in accordance with the methodology and parameters in Section 3.3 to ensure that the alarm/trip will occur prior to exceeding the limits of Section 3.1.2.a. The OPERABILITY and use of this instrumentation is consistent with the requirements of General Design Criteria 60, 63, and 64 of Appendix A to 10 CFR Part 50.

Table 3-1. Radioactive Gaseous Effluent Monitoring Instrumentation

Instrument	OPERABILITY Requirements[b]		
	Minimum Channels OPERABLE	Applicability	ACTION
1. Steam Jet Air Ejector Noble Gas Activity Monitor (RE-15)	1	MODES 1,2,3,4	37
2. Plant Vent Stack a. Noble Gas Activity Monitor (RE-14 or RE-22)	1	At all times	37[a]
b. Iodine Sampler	1	At all times	39
c. Particulate Sampler	1	At all times	39
d. Flowrate Monitor	1	At all times	36
3. GASEOUS RADWASTE TREATMENT SYSTEM Noble Gas Activity Monitor (RE-14), with Alarm and Automatic Termination of Release	1	At all times	35

a. For continuous releases.

b. All requirements in this table apply to each unit.

Table 3-1 (contd). Notation for Table 3-1 — ACTION Statements

ACTION 35 — With the number of channels OPERABLE less than required by the Minimum Channels OPERABLE requirement, the contents of the tank(s) may be released to the environment provided that prior to initiating the release:

a. At least two independent samples of the tank's contents are analyzed, and

b. At least two technically qualified members of the Facility Staff independently verify the discharge line valving, and

(1) Verify the manual portion of the computer input for the release rate calculations performed on the computer, or

(2) Verify the entire release rate calculations if such calculations are performed manually.

Otherwise, suspend release of radioactive effluents via this pathway.

ACTION 36 — With the number of channels OPERABLE less than required by the Minimum Channels OPERABLE requirement, effluent releases via this pathway may continue provided the flowrate is estimated at least once per 4 hours.

ACTION 37 — With the number of channels OPERABLE less than required by the Minimum Channels OPERABLE requirement, effluent releases via this pathway may continue provided grab samples are taken at least once per 8 hours and these samples are analyzed for gross activity within 24 hours.

ACTION 39 — With the number of channels OPERABLE less than required by the Minimum Channels OPERABLE requirement, effluent releases via the affected pathway may continue provided samples are continuously collected with auxiliary sampling equipment as required in Table 3-3.

Table 3-2. Radioactive Gaseous Effluent Monitoring Instrumentation Surveillance Requirements

Instrument	Surveillance Requirements[d]				
	CHANNEL CHECK	SOURCE CHECK {Source Check}	CHANNEL CALIBRA-TION	CHANNEL FUNCTIONAL TEST {CHANNEL OPERATIONAL TEST}	MODES[c]
1. Steam Jet Air Ejector					
Noble Gas Activity Monitor (RE-15)	D	M	R[b]	Q[a(2)]	1,2,3,4
2. Plant Vent Stack					
a. Noble Gas Activity Monitor					
RE-14	D	M	R[b]	Q[a(1,2)]	All
RE-22	D	M	R[b]	Q[a(2)]	All
b. Iodine Sampler	W	NA	NA	NA	All
c. Particulate Sampler	W	NA	NA	NA	All
d. Flowrate Monitor	D	NA	R	Q	All

a. In addition to the basic functions of a CHANNEL FUNCTIONAL TEST {CHANNEL OPERATIONAL TEST} (Section 10.2):

(1) The CHANNEL FUNCTIONAL TEST {CHANNEL OPERATIONAL TEST} shall also demonstrate that automatic isolation of this pathway and control room annunciation occur if any of the following conditions exists:

(a) Instrument indicates measured levels above the alarm/trip setpoint;

(b) Loss of control power; or

(c) Loss of instrument power.

(2) The CHANNEL FUNCTIONAL TEST {CHANNEL OPERATIONAL TEST} shall also demonstrate that control room annunciation occurs if any of the following conditions exists:

(a) Instrument indicates a downscale failure; or

(b) Instrument controls not set in the OPERATE mode.

b. The initial CHANNEL CALIBRATION shall be performed using one or more of the reference standards certified by the National Institute of Standards and Technology, or using standards that have been obtained from suppliers that participate in measurement assurance activities with NIST. For any subsequent CHANNEL CALIBRATION, sources that have been related to the initial calibration shall be used.

c. MODES in which surveillance is required. "All" means "At all times."

d. All requirements in this table apply to each unit.

3.1.2 Gaseous Effluent Dose Rate Control

In accordance with Technical Specifications 6.8.3.e(iii) {5.5.4.c} and 6.8.3.e(vii) {5.5.4.g}, the licensee shall conduct operations so that the dose rates due to radioactive materials released in gaseous effluents from the site to areas at and beyond the SITE BOUNDARY (see Figure 10-1) are limited as follows:

a. For noble gases: Less than or equal to a dose rate of 500 mrem/y to the total body and less than or equal to a dose rate of 3000 mrem/y to the skin, and

b. For Iodine-131, Iodine-133, tritium, and for all radionuclides in particulate form with half-lives greater than 8 days: Less than or equal to a dose rate of 1500 mrem/y to any organ.

3.1.2.1 Applicability

This limit applies at all times.

3.1.2.2 Actions

With a dose rate due to radioactive material released in gaseous effluents exceeding the limit stated in Section 3.1.2, immediately decrease the release rate to within the stated limit.

This control does not affect shutdown requirements or MODE changes.

3.1.2.3 Surveillance Requirements

The dose rates due to radioactive materials in areas at or beyond the SITE BOUNDARY due to releases of gaseous effluents shall be determined to be within the above limits, in accordance with the methods and procedures in Section 3.4.1, by obtaining representative samples and performing analyses in accordance with the sampling and analysis program specified in Table 3-3.

3.1.2.4 Basis

This control is provided to ensure that gaseous effluent dose rates will be maintained within the limits that historically have provided reasonable assurance that radioactive material discharged in gaseous effluents will not result in a dose to a MEMBER OF THE PUBLIC in an UNRESTRICTED AREA, either within or outside the SITE BOUNDARY, exceeding the limits specified in Appendix I of 10 CFR Part

50, while allowing operational flexibility for effluent releases. For MEMBERS OF THE PUBLIC who may at times be within the SITE BOUNDARY, the occupancy of the MEMBER OF THE PUBLIC will be sufficiently low to compensate for any increase in the atmospheric diffusion factor above that for the SITE BOUNDARY.

The dose rate limit for Iodine-131, Iodine-133, tritium, and radionuclides in particulate form with half-lives greater than 8 days specifically applies to dose rates to a child via the inhalation pathway.

This control applies to the release of gaseous effluents from all reactors at the site.

Table 3-3. Radioactive Gaseous Waste Sampling and Analysis Program

Gaseous Release Type	Sampling and Analysis Requirements[a,b]			
	Sampling FREQUENCY	Minimum Analysis FREQUENCY	Type of Activity Analysis	MINIMUM DETECTABLE CONCENTRATION (MDC) (μCi/mL)
Waste Gas Decay Tank	P Each Tank Grab Sample	P Each Tank	PRINCIPAL GAMMA EMITTERS	1 E-4
Containment Purge	P[c] Each Purge Grab Sample	P[c] Each Purge	PRINCIPAL GAMMA EMITTERS H-3	1 E-4 1 E-6
Condenser Steam Jet Air Ejector, Plant Vent Stack	M[c,d,f] Grab Sample	M[c]	PRINCIPAL GAMMA EMITTERS H-3	1 E-4 1 E-6
Plant Vent Stack, Containment Purge	CONTINUOUS[g] Charcoal or Silver Zeolite	W[e] Charcoal or Silver Zeolite Sample	I-131 I-133	1 E-12 1 E-10
	CONTINUOUS[g]	W[e] Particulate Sample	PRINCIPAL GAMMA EMITTERS	1 E-11
	CONTINUOUS[g]	M COMPOSITE Particulate Sample	Gross Alpha	1 E-11
	CONTINUOUS[g]	Q COMPOSITE Particulate Sample	Sr-89, Sr-90	1 E-11
	CONTINUOUS[g]	Noble Gas Monitor	Noble Gases (Gross Beta and Gamma)	1 E-6

Table 3-3 (contd). Notation for Table 3-3

a. All requirements in this table apply to each unit. Deviation from the MDC requirements of this table shall be reported in accordance with Section 7.2. Deviation from the composite sampling requirements of this table shall be reported in accordance with Section 7.2.

b. Terms printed in all capital letters are defined in Chapter 10.

c. Analyses shall also be performed following shutdown from greater than or equal to 15% RATED THERMAL POWER, startup to greater than or equal to 15% RATED THERMAL POWER, or a THERMAL POWER change exceeding 15% of the RATED THERMAL POWER within a one-hour period.

d. Tritium grab samples shall be taken from the plant vent stack at least once per 24 hours when the refueling canal is flooded.

e. Samples shall be changed at least once per 7 days and analyses shall be completed within 48 hours after changing (or after removal from sampler). Sampling shall also be performed at least once per 24 hours for at least 2 days following each shutdown from greater than or equal to 15% RATED THERMAL POWER, startup to greater than or equal to 15% RATED THERMAL POWER, or THERMAL POWER change exceeding 15% of RATED THERMAL POWER in one hour, and analyses shall be completed within 48 hours of changing. When samples collected for 24 hours are analyzed, the corresponding MDC may be increased by a factor of 10.

f. Tritium grab samples shall be taken at least once per 7 days from the ventilation exhaust from the spent fuel pool area, whenever spent fuel is in the spent fuel pool.

g. The ratio of the sample flowrate to the sampled stream flowrate shall be known for the time period covered by each dose or dose rate calculation made in accordance with controls specified in Sections 3.1.2, 3.1.3, and 3.1.4.

3.1.3 Gaseous Effluent Air Dose Control

In accordance with Technical Specifications 6.8.3.e(v) {5.5.4.e} and 6.8.3.e(viii) {5.5.4.h}, the air dose due to noble gases released in gaseous effluents, from each reactor unit, to areas at and beyond the SITE BOUNDARY (see Figure 10-1) shall be limited to the following:

a. During any calendar quarter: Less than or equal to 5 mrad for gamma radiation and less than or equal to 10 mrad for beta radiation, and

b. During any calendar year: Less than or equal to 10 mrad for gamma radiation and less than or equal to 20 mrad for beta radiation.

3.1.3.1 Applicability

This limit applies at all times.

3.1.3.2 Actions

With the calculated air dose from radioactive noble gases in gaseous effluents exceeding any of the above limits, prepare and submit to the Nuclear Regulatory Commission within 30 days, pursuant to Technical Specification 6.9.2 {10 CFR 50.4}, a Special Report which identifies the cause(s) for exceeding the limit(s); defines the corrective actions that have been taken to reduce the releases; and defines the proposed corrective actions to be taken to assure that subsequent releases of radioactive noble gases in gaseous effluents will be in compliance with the limits of Section 3.1.3.

This control does not affect shutdown requirements or MODE changes.

3.1.3.3 Surveillance Requirements

Cumulative air dose contributions from noble gas radionuclides released in gaseous effluents from each unit to areas at and beyond the SITE BOUNDARY, for the current calendar quarter and current calendar year, shall be determined in accordance with Section 3.4.2 at least once per 31 days.

3.1.3.4 Basis

This control is provided to implement the requirements of Sections II.B, III.A and IV.A of Appendix I, 10 CFR Part 50. Section 3.1.3 implements the guides set forth in Section II.B of Appendix I. The ACTION statements in Section 3.1.3.2 provide the required operating flexibility and at the same time implement the

guides set forth in Section IV.A of Appendix I, assuring that the releases of radioactive material in gaseous effluents to UNRESTRICTED AREAS will be kept "as low as is reasonably achievable." The Surveillance requirements in Section 3.1.3.3 implement the requirements in Section III.A of Appendix I, which require that conformance with the guides of Appendix I be shown by calculational procedures based on models and data such that the actual exposure of a MEMBER OF THE PUBLIC through appropriate pathways is unlikely to be substantially underestimated. The dose calculations established in Section 3.4.2 for calculating the doses due to the actual releases of noble gases in gaseous effluents are consistent with the methodology provided in Regulatory Guide 1.109 (Reference 3), and Regulatory Guide 1.111 (Reference 5). The equations in Section 3.4.2 provided for determining the air doses at the SITE BOUNDARY are based upon the historical annual average atmospheric conditions.

3.1.4 Control on Gaseous Effluent Dose to a Member of the Public

In accordance with Technical Specifications 6.8.3.e(v) {5.5.4.e} and 6.8.3.e(ix) {5.5.4.i}, the dose to a MEMBER OF THE PUBLIC from I-131, I-133, tritium, and all radionuclides in particulate form with half-lives greater than 8 days in gaseous effluents released, from each reactor unit, to areas at and beyond the SITE BOUNDARY (see Figure 10-1) shall be limited to the following:

a. During any calendar quarter: Less than or equal to 7.5 mrem to any organ, and

b. During any calendar year: Less than or equal to 15 mrem to any organ.

3.1.4.1 Applicability

This limit applies at all times.

3.1.4.2 Actions

With the calculated dose from the release of I-131, I-133, tritium, or radionuclides in particulate form with half-lives greater than 8 days, in gaseous effluents exceeding any of the above limits, prepare and submit to the Nuclear Regulatory Commission within 30 days, pursuant to Technical Specification 6.9.2 {10 CFR 50.4}, a Special Report which identifies the cause(s) for exceeding the limit; defines the corrective actions that have been taken to reduce the releases of radioiodines and radionuclides in particulate form with half-lives greater than 8 days in gaseous effluents; and defines proposed corrective actions to assure that subsequent releases will be in compliance with the limits stated in Section 3.1.4.

This control does not affect shutdown requirements or MODE changes.

3.1.4.3 Surveillance Requirements

Cumulative organ dose contributions to a MEMBER OF THE PUBLIC from I-131, I-133, tritium, and radionuclides in particulate form with half-lives greater than 8 days released in gaseous effluents from each unit to areas at and beyond the SITE BOUNDARY, for the current calendar quarter and current calendar year, shall be determined in accordance with Section 3.4.3 at least once per 31 days.

3.1.4.4 Basis

This control is provided to implement the requirements of Section II.C, III.A and IV.A of Appendix I, 10 CFR Part 50. The limits stated in Section 3.1.4 are the guides set forth in Section II.C of Appendix I. The ACTION statements in Section 3.1.4.2 provide the required operating flexibility and at the same time implement the guides set forth in Section IV.A of Appendix I to assure that the releases of radioactive materials in gaseous effluents to UNRESTRICTED AREAS will be kept "as low as is reasonably achievable." The calculational methods specified in the Surveillance Requirements of Section 3.1.4.3 implement the requirements in Section III.A of Appendix I that conformance with the guides of Appendix I be shown by calculational procedures based on models and data, such that the actual exposure of a MEMBER OF THE PUBLIC through appropriate pathways is unlikely to be substantially underestimated. The calculational methods in Section 3.4.3 for calculating the doses due to the actual releases of the subject materials are consistent with the methodology provided in Regulatory Guide 1.109 (Reference 3), and Regulatory Guide 1.111 (Reference 5). These equations provide for determining the actual doses based upon the historical annual average atmospheric conditions. The release specifications for radioiodines, radioactive materials in particulate form and radionuclides other than noble gases are dependent on the existing radionuclide pathways to man, in the areas at and beyond the SITE BOUNDARY. The pathways which were examined in the development of these calculations were: 1) individual inhalation of airborne radionuclides, 2) deposition of radionuclides onto green leafy garden vegetation with subsequent consumption by man, 3) deposition onto grassy areas where milk animals and meat producing animals graze with consumption of the milk and meat by man, and 4) deposition on the ground with subsequent exposure of man.

3.1.5 Gaseous Radwaste Treatment System Control

In accordance with Technical Specification 6.8.3.e(vi) {5.5.4.f}, the GASEOUS RADWASTE TREATMENT SYSTEM and the VENTILATION EXHAUST TREATMENT SYSTEM {ventilation exhaust treatment system} shall be OPERABLE. The appropriate portions of the GASEOUS RADWASTE TREATMENT SYSTEM shall be used to reduce radioactive materials in gaseous wastes prior to their discharge when the projected air doses due to gaseous effluent releases, from each reactor unit, to areas at and beyond the SITE BOUNDARY (see Figure 10-1) would exceed 0.2 mrad for gamma radiation or 0.4 mrad for beta radiation in 31 days. The appropriate portions of the VENTILATION EXHAUST TREATMENT SYSTEM {ventilation exhaust treatment system} shall be used to reduce radioactive materials in gaseous wastes prior to their discharge when the projected doses due to gaseous effluent releases, from each reactor unit, to areas beyond the SITE BOUNDARY (see Figure 10-1) would exceed 0.3 mrem to any organ of a MEMBER OF THE PUBLIC in 31 days.

3.1.5.1 Applicability

These limits apply at all times.

3.1.5.2 Actions

With gaseous waste being discharged without treatment and in excess of the limits in Section 3.1.5, prepare and submit to the Nuclear Regulatory Commission within 30 days, pursuant to Technical Specification 6.9.2 {10 CFR 50.4}, a Special Report which includes the following information:

a. Identification of the inoperable equipment or subsystem and the reason for inoperability,

b. Action(s) taken to restore the inoperable equipment to OPERABLE status, and

c. Summary description of action(s) taken to prevent a recurrence.

This control does not affect shutdown requirements or MODE changes.

3.1.5.3 Surveillance Requirements

Doses due to gaseous releases from each unit to areas at and beyond the SITE BOUNDARY shall be projected at least once per 31 days, in accordance with Section 3.5.1, when the GASEOUS RADWASTE TREATMENT SYSTEM or the VENTILATION EXHAUST TREATMENT SYSTEM {ventilation exhaust treatment system} is not being fully utilized.

The GASEOUS RADWASTE TREATMENT SYSTEM and the VENTILATION EXHAUST TREATMENT SYSTEM {ventilation exhaust treatment system} shall be demonstrated OPERABLE:

a. by meeting the controls of Sections 3.1.2, and either 3.1.3 (for the GASEOUS RADWASTE TREATMENT SYSTEM) or 3.1.4 (for the VENTILATION EXHAUST TREATMENT SYSTEM {ventilation exhaust treatment system}), or

b. by operating the GASEOUS RADWASTE TREATMENT SYSTEM equipment and the VENTILATION EXHAUST TREATMENT SYSTEM {ventilation exhaust treatment system} equipment for at least 15 minutes, at least once per 92 days unless the appropriate system has been utilized to process radioactive gaseous effluents during the previous 92 days.

3.1.5.4 Basis

The OPERABILITY of the GASEOUS RADWASTE TREATMENT SYSTEM and the VENTILATION EXHAUST TREATMENT SYSTEM {ventilation exhaust treatment system} ensures that the systems will be available for use whenever gaseous effluents require treatment prior to release to the environment. The requirement that the appropriate portions of these systems be used, when specified, provides reasonable assurance that the releases of radioactive materials in gaseous effluents will be kept "as low as is reasonably achievable." This control implements the requirements of 10 CFR Part 50.36a, General Design Criterion 60 of Appendix A to 10 CFR Part 50, and the design objectives given in Section II.D of Appendix I to 10 CFR Part 50. The specified limits governing the use of appropriate portions of these systems were specified as a suitable fraction of the dose design objectives set forth in Section II.B and II.C of Appendix I, 10 CFR Part 50, for gaseous effluents.

3.1.6 MAJOR CHANGES to the GASEOUS RADIOACTIVE WASTE TREATMENT SYSTEM and the VENTILATION EXHAUST TREATMENT SYSTEM {Ventilation Exhaust Treatment System}

Licensee-initiated MAJOR CHANGES to the GASEOUS RADIOACTIVE WASTE TREATMENT SYSTEM or the VENTILATION EXHAUST TREATMENT SYSTEM {ventilation exhaust treatment system}:

a. Shall be reported to the Nuclear Regulatory Commission in the Annual Radioactive Effluent Release Report {Radioactive Effluent Release Report} for the period in which the change was implemented, in accordance with Section 7.2.2.7.

b. Shall become effective upon review and approval in accordance with Technical Specification 6.5.3.1 {the FNP Quality Assurance Program}.

3.2 GASEOUS RADWASTE TREATMENT SYSTEM

At the Farley Nuclear Plant, there are six designated points where radioactivity may be released to the atmosphere in gaseous discharges: the Unit 1 and Unit 2 Plant Vent Stacks; the Unit 1 and Unit 2 Turbine Building Vents (steam jet air ejectors); and the Unit 1 and Unit 2 Integrated Leak Rate Test (ILRT) Vents. Of these six, only four are routine release pathways, since ILRT Vent releases are performed only infrequently.

Figure 3-1 gives schematic diagrams of the Waste Gas Treatment Systems and the Ventilation Systems (Reference 7). Discharges from the two reactor units are separated, with no shared systems. In each unit, Containment Purge and Waste Gas Decay Tank effluents are discharged through the respective Plant Vent, and are treated as contributions to the on-going Plant Vent CONTINUOUS release. Although Waste Gas Decay Tank effluents are released via the Plant Vent Stack, they are tracked separately and accounted for as BATCH releases.

Table 3-4 summarizes the release height and release type characteristics of the various release pathways and source streams. Chapter 8 discusses the calculation of atmospheric dispersion parameters using the ground-level and mixed-mode (i.e., split-wake) models.

As established in Section 3.1.1, gaseous effluent monitor setpoints are required for the noble gas monitors on the two Plant Vents and the two Turbine Building Vents (steam jet air ejectors). Waste Gas Treatment System discharges are not monitored separately during release, but are sampled prior to release and are monitored by the downstream Plant Vent monitors during release. ILRT discharges are not monitored during release, but are sampled prior to release; the ILRT Vent may be assigned an appropriate allocation factor during the release period, and dose calculations may be based on estimates of the activity concentration and the volume of air released. Sampling and analysis of both these release pathways must be sufficient to ensure that the gaseous effluent dose limits specified in Section 3.1.3 and Section 3.1.4 are not exceeded.

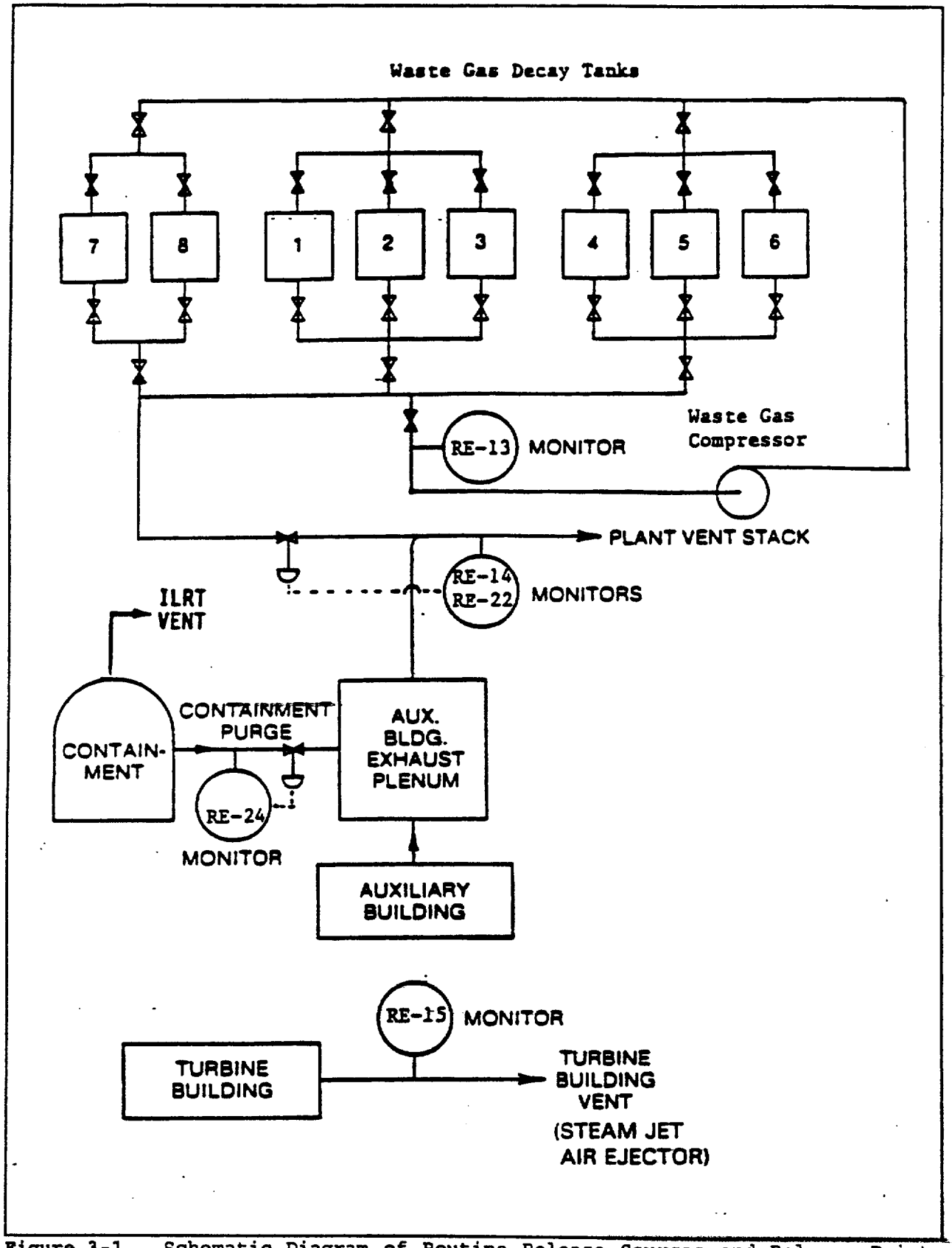

Figure 3-1. Schematic Diagram of Routine Release Sources and Release Points (Typical of Both Units)

3.3 GASEOUS EFFLUENT MONITOR SETPOINTS

3.3.1 General Provisions Regarding Noble Gas Monitor Setpoints

Noble gas radioactivity monitor setpoints calculated in accordance with the methodology presented in this section are intended to ensure that the limits of Section 3.1.2.a are not exceeded. They will be regarded as upper bounds for the actual high alarm setpoints. That is, a lower high alarm setpoint may be established or retained on the monitor, if desired. Intermediate level setpoints should be established at an appropriate level to give sufficient warning prior to reaching the high alarm setpoint.

If no release is planned for a given pathway, or if there is no detectable activity in the gaseous stream being evaluated for release, the setpoint should be established as close to background as practical to prevent spurious alarms, and yet alarm should a significant inadvertent release occur.

Section 3.1.1 establishes the requirements for gaseous effluent monitoring instrumentation, and Section 3.2 describes the VENTILATION EXHAUST TREATMENT SYSTEM {ventilation exhaust treatment system} and the GASEOUS RADWASTE TREATMENT SYSTEM. From those sections, it can be seen that certain monitors are located on final release pathways, that is, streams that are being monitored immediately before being discharged from the plant; the setpoint methodology for these monitors is presented in Section 3.3.2. Other monitors are located on source streams, that is, streams that merge with other streams prior to passing a final monitor and being discharged; the setpoint methodology for these monitors is presented in Section 3.3.3. Table 3-4 identifies which of these setpoint methodologies applies to each monitor. Some additional monitors with special setpoint requirements are discussed in Section 3.3.5.

Table 3-4. Applicability of Gaseous Monitor Setpoint Methodologies

Final Release Pathways with no Monitored Source Streams

Release Elevation: Ground-level

Unit 1 or Unit 2 Turbine Building Vent
- Release Type: CONTINUOUS
- Monitor: 1RE-15 / 2RE-15
- Setpoint Method: Section 3.3.2
- Maximum Flowrate: 1060 cfm (5.00 E+05 mL/s)

Unit 1 or Unit 2 ILRT Vent
- Release Type: BATCH
- Monitor: None
- Setpoint Method: None
- Maximum Flowrate: Release-dependent

Final Release Pathways with One or More Monitored Source Streams

Release Elevation: Mixed-Mode

Unit 1 or Unit 2 Plant Vent Stack
- Release Type: CONTINUOUS
- Monitor: 1RE-14 / 2RE-14, *and* 1RE-22 / 2RE-22
- Setpoint Method: Section 3.3.2
- Maximum Flowrate: 150,000 cfm (7.08 E+07 mL/s)

Source Stream: Unit 1 or Unit 2 Containment Purge
- Release Type: CONTINUOUS
- Monitor: 1RE-24 / 2RE-24
- Setpoint Method: Section 3.3.3 is optional. See Section 3.3.5.
- Maximum Flowrate: Release-dependent

Source Stream: Unit 1 or Unit 2 Waste Gas Decay Tanks
- Release Type: BATCH
- Monitor: None
- Setpoint Method: None
- Maximum Flowrate: Release-dependent

$(\bar{\chi}/\bar{Q})_{vb}$ Values for Use in Setpoint Calculations

Ground-Level Releases: 4.87×10^{-5} s/m^3 [S Sector]

Mixed-Mode Releases: 1.08×10^{-6} s/m^3 [SSE Sector]

3.3.2 Setpoint for the Final Noble Gas Monitor on Each Release Pathway

3.3.2.1 Overview of Method

Gaseous effluent radioactivity monitors are intended to alarm prior to exceeding the limits of Section 3.1.2.a. Therefore, their alarm setpoints are established to ensure compliance with the following equation:

$$c = \textit{the lesser of} \begin{cases} AG \cdot SF \cdot X \cdot R_t \\ AG \cdot SF \cdot X \cdot R_k \end{cases} \qquad (3.1)$$

where:

c = the setpoint, in μCi/mL, of the radioactivity monitor measuring the concentration of radioactivity in the effluent line prior to release. The setpoint represents a concentration which, if exceeded, could result in dose rates exceeding the limits of Section 3.1.2.a at or beyond the SITE BOUNDARY.

AG = an administrative allocation factor applied to divide the release limit among all the gaseous release pathways at the site.

SF = the safety factor selected to compensate for statistical fluctuations and errors of measurement.

X = the noble gas concentration for the release under consideration.

R_t = the ratio of the dose rate limit for the total body, 500 mrem/y, to the dose rate to the total body for the conditions of the release under consideration.

R_k = the ratio of the dose rate limit for the skin, 3000 mrem/y, to the dose rate to the skin for the conditions of the release under consideration.

Equation (3.1) shows the relationships of the critical parameters that determine the setpoint. However, in order to apply the methodology presented in the equation to a mixture of noble gas radionuclides, radionuclide-specific concentrations and dose factors must be taken into account under conditions of maximum flowrate for the release point and annual average meteorology.

The basic setpoint method presented below is applicable to the radioactivity monitor nearest the point of release for the release pathway. For monitors measuring the radioactivity in source streams that merge with other streams prior to subsequent monitoring and release, the modifications presented in Section 3.3.3 must be applied.

3.3.2.2 Setpoint Calculation Steps

Step 1: Determine the concentration, X_{iv}, of each noble gas radionuclide i in the gaseous stream v being considered for release, in accordance with the sampling and analysis requirements of Section 3.1.2. Then sum these concentrations to determine the total noble gas concentration, $\sum_i X_{iv}$.

Step 2: Determine R_t, the ratio of the dose rate limit for the total body, 500 mrem/y, to the total body dose rate due to noble gases detected in the release under consideration, as follows:

$$R_t = \frac{500}{(\overline{X/Q})_{vb} \sum_i \left[K_i \cdot Q_{iv}\right]} \qquad (3.2)$$

where:

500 = the dose rate limit for the total body, 500 mrem/y.

$(\overline{X/Q})_{vb}$ = the highest annual average relative concentration at the SITE BOUNDARY for the discharge point of release pathway v. Table 3-4 includes an indication of what release elevation is applicable to each release pathway; release elevation determines the appropriate value of $(\overline{X/Q})_{vb}$.

K_i = the total-body dose factor due to gamma emissions from noble gas radionuclide i, in (mrem/y)/(μCi/m^3), from Table 3-5.

Q_{iv} = the release rate of noble gas radionuclide i from the release pathway under consideration, in μCi/s, calculated as the product of X_{iv} and f_{av}, where:

X_{iv} = the concentration of noble gas radionuclide i for the particular release, in μCi/mL.

f_{av} = the maximum anticipated flowrate for release pathway v during the period of the release under consideration, in mL/s.

Step 3: Determine R_k, the ratio of the dose rate limit for the skin, 3000 mrem/y, to the skin dose rate due to noble gases detected in the release under consideration, as follows:

$$R_k = \frac{3000}{(\overline{X/Q})_{vb} \sum_i \left[(L_i + 1.1 M_i) \cdot Q_{iv} \right]} \qquad (3.3)$$

where:

3000 = the dose rate limit for the skin, 3000 mrem/y.

L_i = the skin dose factor due to beta emissions from noble gas radionuclide i, in (mrem/y)/(μCi/m^3), from Table 3-5.

M_i = the air dose factor due to gamma emissions from noble gas radionuclide i, in (mrad/y)/(μCi/m^3), from Table 3-5.

1.1 = the factor to convert air dose in mrad to skin dose in mrem.

All other terms were defined previously.

Step 4: Determine the maximum noble gas radioactivity monitor setpoint concentration.

Based on the values determined in previous steps, the radioactivity monitor setpoint for the planned release is calculated to ensure that the limits of Section 3.1.2.a will not be exceeded. Because the radioactivity monitor responds primarily to radiation from noble gas radionuclides, the monitor setpoint c_{nv} is based on the concentration of all noble gases in the waste stream, as follows:

$$c_{nv} = \text{the lesser of} \begin{cases} AG_v \cdot SF \cdot \sum_i X_{iv} \cdot R_t \\ AG_v \cdot SF \cdot \sum_i X_{iv} \cdot R_k \end{cases} \quad (3.4)$$

where:

c_{nv} = the calculated setpoint, in μCi/mL, for the noble gas monitor serving gaseous release pathway v.

AG_v = the administrative allocation factor for gaseous release pathway v, applied to divide the release limit among all the gaseous release pathways at the site. The allocation factor may be assigned any value between 0 and 1, under the condition that the sum of the allocation factors for all simultaneously active final release pathways at the entire plant site does not exceed 1. Alternative methods for determination of AG_v are presented in Section 3.3.4.

SF = the safety factor selected to compensate for statistical fluctuations and errors of measurement. The value for the safety factor must be between 0 and 1. A value of 0.5 is reasonable for gaseous releases; a more precise value may be developed if desired.

X_{iv} = the measured concentration of noble gas radionuclide i in gaseous stream v, as defined in Step 1, in μCi/mL.

The values of R_t and R_k to be used in the calculation are those which were determined in Steps 2 and 3 above.

Step 5: Determine whether the release is permissible, as follows:

If $c_{nv} \geq \sum_i X_{iv}$, the release is permissible. However, if c_{nv} is within about 10 percent of $\sum_i X_{iv}$, it may be impractical to use this value of c_{nv}. This situation indicates that measured concentrations are approaching values which would cause the limits of Section 3.1.2.a to be exceeded. Therefore, steps should be taken to reduce contributing source terms of gaseous radioactive material, or to

adjust the allocation of the limits among the active release points. The setpoint calculations (steps 1-4) must then be repeated with parameters that reflect the modified conditions.

If $c_{nv} < \sum_i X_{iv}$, the release may not be made as planned. Consider the alternatives discussed in the paragraph above, and calculate a new setpoint based on the results of the actions taken.

3.3.2.3 Use of the Calculated Setpoint

The setpoint calculated above is in the units μCi/mL. The monitor actually measures a count rate that includes background, so that the calculated setpoint must be converted accordingly:

$$c_{nv}^{*} = (c_{nv} \cdot E_v) + B_v \qquad (3.5)$$

where:

c_{nv}^{*} = the monitor setpoint as a count rate.

E_v = the monitor calibration factor, in count rate/(μCi/mL). Monitor calibration data for conversion between count rate and concentration may include operational data obtained from determining the monitor response to effluent stream concentrations measured by sample analysis.

B_v = the monitor background count rate. In all cases, monitor background must be controlled so that the monitor is capable of responding to concentrations in the range of the setpoint value. Contributions to the monitor background may include any or all of the following factors: ambient background radiation, plant-related radiation levels at the monitor location (which may change between shutdown and power conditions), and internal background due to contamination of the monitor's sample chamber.

The count rate units for c_{nv}^{*}, E_v, and B_v in equation (3.5) must be the same (cpm or cps).

3.3.3 <u>Setpoints for Noble Gas Monitors on Effluent Source Streams</u>

Table 3-4 lists certain gaseous release pathways as being source streams. As may be seen in the figures of Section 3.2, these are streams that merge with other streams, prior to passing a final radioactivity monitor and being released. Unlike the final monitors, the source stream monitors measure radioactivity in effluent streams for which flow can be terminated; therefore, the source stream monitors have control logic to terminate the source stream release at the alarm setpoint.

3.3.3.1 Setpoint of the Monitor on the Source Stream

Step 1: Determine the concentration X_{is} of each noble gas radionuclide i in source stream s (in μCi/mL) according to the results of its required sample analyses [see Section 3.1.2].

Step 2: Determine r_t, the ratio of the dose rate limit for the total body, 500 mrem/y, to the total body dose rate due to noble gases detected in the source stream under consideration. Use the X_{is} values and the maximum anticipated source stream flow rate f_{as} in equation (3.2) to determine the total body dose rate for the source stream, substituting r_t for R_t.

The SITE BOUNDARY relative dispersion value used in Steps 2 and 3 for the source stream is the same as the $(\bar{X}/\bar{Q})_{vb}$ that applies to the respective merged stream. This is because the $(\bar{X}/\bar{Q})$ value is determined by the meteorology of the plant site and the physical attributes of the release point, and is unaffected by whether or not a given source stream is operating.

Step 3: Determine r_k, the ratio of the dose rate limit for the skin, 3000 mrem/y, to the skin dose rate due to noble gases detected in the source stream under consideration. Use the X_{is} values and the maximum anticipated source stream flow rate f_{as} in equation (3.3) to determine the skin dose rate for the source stream, substituting r_k for R_k.

Step 4: Determine the maximum noble gas radioactivity monitor setpoint concentration, as follows:

$$c_{ns} = \text{the lesser of} \begin{cases} AG_s \cdot SF \cdot \sum_i X_{is} \cdot r_t \\ AG_s \cdot SF \cdot \sum_i X_{is} \cdot r_k \end{cases} \quad (3.6)$$

where:

c_{ns} = the calculated setpoint (in μCi/mL) for the noble gas monitor serving gaseous source stream s.

AG_s = the administrative allocation factor applied to gaseous source stream s. For a given final release point v, the sum of all the AG_s values for source streams contributing to the final release point must not exceed the release point's allocation factor AG_v.

X_{is} = the measured concentration of noble gas radionuclide i in gaseous source stream s, as defined in Step 1, in μCi/mL.

The values of r_t and r_k to be used in the calculation are those which were determined in Steps 2 and 3 above. The safety factor, SF, was defined previously.

Step 5: Determine whether the release is permissible, as follows:

If $c_{ns} \geq \sum_i X_{is}$, the release is permissible. However, if c_{ns} is within about 10 percent of $\sum_i X_{is}$, it may be impractical to use this value of c_{ns}. This situation indicates that measured concentrations are approaching values which would cause the limits of Section 3.1.2.a to be exceeded. Therefore, steps should be taken to reduce contributing source terms of gaseous radioactive material, or to adjust the allocation of the limits among the active release points. The setpoint calculations (steps 1-4) must then be repeated with parameters that reflect the modified conditions.

If $c_{ns} < \sum_i X_{is}$, the release may not be made as planned. Consider the alternatives discussed in the paragraph above, and calculate a new setpoint based on the results of the actions taken.

3.3.3.2 Effect on the Setpoint of the Monitor on the Merged Stream

Before beginning a release from a monitored source stream, a setpoint must be determined for the source stream monitor as presented in Section 3.3.3.1. In addition, whether or not the source stream has its own effluent monitor, the previously-determined maximum allowable setpoint for the downstream final monitor on the merged stream must be redetermined. This is accomplished by repeating the steps of Section 3.3.2, with the following modifications.

Modification 1: The new maximum anticipated flowrate of the merged stream is the sum of the old merged stream maximum flowrate ($(f_{av})_{old}$), and the maximum flowrate of the source stream being considered for release (f_{as}).

$$(f_{av})_{new} = (f_{av})_{old} + f_{as} \tag{3.7}$$

Modification 2: The new concentration of noble gas radionuclide i in the merged stream includes both the contribution of the merged stream *without* the source stream, *and* the source stream being considered for release.

$$(X_{iv})_{new} = \frac{(f_{av})_{old} \cdot (X_{iv})_{old} + f_{as} \cdot X_{is}}{(f_{av})_{new}} \tag{3.8}$$

3.3.4 Determination of Allocation Factors, AG

When simultaneous gaseous releases are conducted, an administrative allocation factor must be applied to divide the release limit among the active gaseous release pathways. This is to assure that the dose rate limit for areas at and beyond the SITE BOUNDARY (see Section 3.1.2) will not be exceeded by simultaneous releases. The allocation factor for any pathway may be assigned any value between 0 and 1, under the following two conditions:

1. The sum of the allocation factors for all simultaneously-active *final* release paths at the plant site may not exceed 1.

2. The sum of the allocation factors for all simultaneously-active *source streams* merging into a given final release pathway may not exceed the allocation factor of that final release pathway.

Any of the following three methods may be used to assign the allocation factors to the active gaseous release pathways:

1. For ease of implementation, AG_v may be equal for all release pathways:

$$AG_v = \frac{1}{N} \tag{3.9}$$

where:

N = the number of simultaneously active gaseous release pathways.

2. AG_v for a given release pathway may be selected based on an *estimate* of the portion of the total SITE BOUNDARY dose rate (from all simultaneous releases) that is contributed by the release pathway. During periods when a given building or release pathway is not subject to gaseous radioactive releases, it may be assigned an allocation factor of zero.

3. AG_v for a given release pathway may be selected based on a *calculation* of the portion of the total SITE BOUNDARY dose rate that is contributed by the release pathway, as follows:

$$AG_v = \frac{(\overline{X/Q})_{vb} \sum_i (K_i\, Q_{iv})}{\sum_{r=1}^{N} \left[(\overline{X/Q})_{rb} \sum_i (K_i\, Q_{ir}) \right]} \tag{3.10}$$

where:

$(\overline{X}/\overline{Q})_{vb}$ = the annual average SITE BOUNDARY relative concentration applicable to the gaseous release pathway v for which the allocation factor is being determined, in s/m^3.

K_i = the total-body dose factor due to gamma emissions from noble gas radionuclide i, in $(mrem/y)/(\mu Ci/m^3)$, from Table 3-5.

Q_{iv} = the release rate of noble gas radionuclide i from release pathway v, in $\mu Ci/s$, calculated as the product of X_{iv} and f_{av}, where:

X_{iv} = the concentration of noble gas radionuclide i applicable to the gaseous release pathway v for which the allocation factor is being determined, in μCi/mL.

f_{av} = the discharge flowrate applicable to gaseous release pathway v for which the allocation factor is being determined, in mL/s.

$(\overline{X}/\overline{Q})_{rb}$ = the annual average SITE BOUNDARY relative concentration applicable to active gaseous release pathway r, in s/m^3.

Q_{ir} = the release rate of noble gas radionuclide i applicable to active release pathway r, in μCi/s, calculated as the product of X_{ir} and f_{ar}, where:

X_{ir} = the concentration of noble gas radionuclide i applicable to active gaseous release pathway r, in μCi/mL.

f_{ar} = the discharge flowrate applicable to active gaseous release pathway r, in mL/s.

N = the number of simultaneously active gaseous release pathways (including pathway v that is of interest).

NOTE: Although equations (3.9) and (3.10) are written to illustrate the assignment of the allocation factors for final release pathways, they may also be used to assign allocation factors to the source streams that merge into a given final release pathway.

3.3.5 Setpoints for Noble Gas Monitors with Special Requirements

The Farley Nuclear Plant operating philosophy treats the Waste Gas Decay Tank supply monitors (1/2 RE-013) and the Containment Purge monitors (1/2 RE-024) as process monitors, not effluent monitors. However, as a matter of information, the following may be noted regarding their setpoints:

- For 1/2 RE-013, the alarm setpoint should be based on a concentration equivalent to no more than the Technical Specification {Technical Requirements Manual} limit for the maximum curie content of a Waste Gas Decay Tank. In converting the curie limit to an equivalent concentration at the location of RE-013, the maximum allowable Waste Gas Decay Tank pressure should be used.

- For 1/2 RE-024, the alarm setpoint concentration may be arrived at in either of two ways. In the first method, the maximum setpoint concentration established by the Technical Specifications may be used. Alternatively, to provide early detection and termination of an abnormally high containment purge release, the [lower] setpoint concentration calculated according to Section 3.3.3 may be used.

3.3.6 Setpoints for Particulate and Iodine Monitors

In accordance with Section 5.1.1 of NRC NUREG-0133 (Reference 1), the effluent controls of Section 3.1.1 do not require that the ODCM establish setpoint calculation methods for particulate and iodine monitors.

3.4 GASEOUS EFFLUENT COMPLIANCE CALCULATIONS

3.4.1 Dose Rates at and Beyond the Site Boundary

Because the dose rate limits for areas at and beyond the SITE specified in Section 3.1.2 are *site* limits applicable at any instant in time, the summations extend over all simultaneously active gaseous final release pathways at the *plant site*. Table 3-4 identifies the gaseous final release pathways at the plant site, and indicates the $(\bar{X}/\bar{Q})_{vb}$ value for each.

3.4.1.1 Dose Rates Due to Noble Gases

For the purpose of implementing the controls of Section 3.1.2.a, the dose rates due to noble gas radionuclides in areas at or beyond the SITE BOUNDARY, due to releases of gaseous effluents, shall be calculated as follows:

For total body dose rates:

$$DR_t = \sum_v \left\{ (\overline{X/Q})_{vb} \sum_i \left[K_i \, Q_{iv} \right] \right\} \tag{3.11}$$

For skin dose rates:

$$DR_k = \sum_v \left\{ (\overline{X/Q})_{vb} \sum_i \left[(L_i + 1.1\, M_i) \, Q_{iv} \right] \right\} \tag{3.12}$$

where:

DR_t = the total body dose rate at the time of the release, in mrem/y.

DR_k = the skin dose rate at the time of the release, in mrem/y.

Q_{iv} = the release rate of noble gas radionuclide i, in μCi/s, equal to the product of f_{tv} and X_{iv}, where:

f_{tv} = the actual average flowrate for release pathway v during the period of the release, in mL/s.

All other terms were defined previously.

3.4.1.2 Dose Rates Due to Iodine-131, Iodine-133, Tritium, and Radionuclides in Particulate Form with Half-Lives Greater than 8 Days

For the purpose of implementing the controls of Section 3.1.2.b, the dose rates due to Iodine-131, Iodine-133, tritium, and all radionuclides in particulate form with half-lives greater than 8 days, in areas at or beyond the SITE BOUNDARY, due to releases of gaseous effluents, shall be calculated as follows:

$$DR_o = \sum_v \left\{ (\overline{X/Q})_{vb} \sum_i \left[P_{io} \, Q'_{iv} \right] \right\} \qquad (3.13)$$

where:

DR_o = the dose rate to organ o at the time of the release, in mrem/y.

P_{io} = the site-specific dose factor for radionuclide i and organ o, in (mrem/y)/(μCi/m^3). Since the dose rate limits specified in Section 3.1.2.b apply only to the child age group exposed to the inhalation pathway, the values of P_{io} may be obtained from Table 3-9, "R_{aipj} for Inhalation Pathway, Child Age Group."

Q'_{iv}= the release rate of radionuclide i from gaseous release pathway v, in μCi/s. For the purpose of implementing the controls of Section 3.1.2.b, only I-131, I-133, tritium, and all radionuclides in particulate form with half-lives greater than 8 days should be included in this calculation.

All other terms were defined previously.

3.4.2 Noble Gas Air Dose at or Beyond Site Boundary

For the purpose of implementing the controls of Section 3.1.3, air doses in areas at or beyond the SITE BOUNDARY due to releases of noble gases from each unit shall be calculated as follows (adapted from Reference 1, page 28, by including only long-term releases):

$$D_\beta = 3.17 \times 10^{-8} \sum_v \left\{ (\overline{X/Q})_{vb} \sum_i \left[N_i \cdot \tilde{Q}_{iv} \right] \right\} \qquad (3.14)$$

$$D_\gamma = 3.17 \times 10^{-8} \sum_v \left\{ (\overline{X/Q})_{vb} \sum_i \left[M_i \cdot \tilde{Q}_{iv} \right] \right\} \tag{3.15}$$

where:

3.17×10^{-8} = a units conversion factor: $1\ y/(3.15 \times 10^7\ s)$.

D_β = the air dose due to beta emissions from noble gas radionuclides, in mrad.

D_γ = the air dose due to gamma emissions from noble gas radionuclides, in mrad.

N_i = the air dose factor due to beta emissions from noble gas radionuclide i, in $(mrad/y)/(\mu Ci/m^3)$, from Table 3-5.

M_i = the air dose factor due to gamma emissions from noble gas radionuclide i, in $(mrad/y)/(\mu Ci/m^3)$, from Table 3-5.

$\tilde{Q}_{iv}$ = the cumulative release of noble gas radionuclide i from release pathway v, in μCi, during the period of interest.

All other terms were defined previously.

Because the air dose limit is on a per-reactor-unit basis, the summations extend over all gaseous final release pathways for a given *unit*. For a release pathway discharging materials originating in both reactor units, the activity discharged from the release point may be apportioned to the two units in any reasonable manner, provided that all activity released via the particular shared release pathway is apportioned to one or the other unit.

The gaseous final release pathways at the plant site, and the $(\overline{X}/\overline{Q})_{vb}$ for each, are identified in Table 3-4.

Table 3-5. Dose Factors for Exposure to a Semi-Infinite Cloud of Noble Gases

Nuclide	γ - Body (K) (mrem/y) per (μCi/m^3)	β - Skin (L) (mrem/y) per (μCi/m^3)	γ - Air (M) (mrad/y) per (μCi/m^3)	β - Air (N) (mrad/y) per (μCi/m^3)
Kr-83m	7.56 E-02	0.00 E+00	1.93 E+01	2.88 E+02
Kr-85m	1.17 E+03	1.46 E+03	1.23 E+03	1.97 E+03
Kr-85	1.61 E+01	1.34 E+03	1.72 E+01	1.95 E+03
Kr-87	5.92 E+03	9.73 E+03	6.17 E+03	1.03 E+04
Kr-88	1.47 E+04	2.37 E+03	1.52 E+04	2.93 E+03
Kr-89	1.66 E+04	1.01 E+04	1.73 E+04	1.06 E+04
Kr-90	1.56 E+04	7.29 E+03	1.63 E+04	7.83 E+03
Xe-131m	9.15 E+01	4.76 E+02	1.56 E+02	1.11 E+03
Xe-133m	2.51 E+02	9.94 E+02	3.27 E+02	1.48 E+03
Xe-133	2.94 E+02	3.06 E+02	3.53 E+02	1.05 E+03
Xe-135m	3.12 E+03	7.11 E+02	3.36 E+03	7.39 E+02
Xe-135	1.81 E+03	1.86 E+03	1.92 E+03	2.46 E+03
Xe-137	1.42 E+03	1.22 E+04	1.51 E+03	1.27 E+04
Xe-138	8.83 E+03	4.13 E+03	9.21 E+03	4.75 E+03
Ar-41	8.84 E+03	2.69 E+03	9.30 E+03	3.28 E+03

All values in this table were obtained from Reference 3 (Table B-1), with units converted.

Table 3-6. Dose Factors for Exposure to Direct Radiation from Noble Gases in an Elevated Finite Plume

The contents of this table are not applicable to the Farley Nuclear Plant.

3.4.3 Dose to a Member of the Public at or Beyond Site Boundary

The dose received by an individual due to gaseous releases from each reactor unit, to areas at or beyond the SITE BOUNDARY, depends on the individual's location, age group, and exposure pathways. The MEMBER OF THE PUBLIC expected to receive the highest dose in the plant vicinity is referred to as the controlling receptor. The dosimetrically-significant attributes of the currently-defined controlling receptor are presented in Table 3-7.

Doses to a member of the public due to gaseous releases of I-131, I-133, tritium, and all radionuclides in particulate form from each unit shall be calculated as follows (equation adapted from Reference 1, page 29, by considering only long-term releases):

$$D_{ja} = 3.17 \times 10^{-8} \sum_{p} \left\{ \sum_{i} R_{aipj} \sum_{v} \left[W_{vip} \cdot \tilde{Q}'_{iv} \right] \right\} \qquad (3.16)$$

where:

D_{ja} = the dose to organ j of an individual in age group a, due to gaseous releases of I-131, I-133, tritium, and all radionuclides in particulate form with half-lives greater than 8 days, in mrem.

3.17×10^{-8} = a units conversion factor: $1\ y/(3.15 \times 10^{7}\ s)$.

R_{aipj} = the site-specific dose factor for age group a, radionuclide i, exposure pathway p, and organ j. For the purpose of implementing the controls of Section 3.1.4, the exposure pathways applicable to calculating the dose to the currently-defined controlling receptor are included in Table 3-7; values of R_{aipj} for each exposure pathway and radionuclide applicable to calculations of dose to the controlling receptor are listed in Table 3-8 through Table 3-11.

A detailed discussion of the methods and parameters used for calculating R_{aipj} for the plant site is presented in Chapter 9. That information may be used for recalculating the R_{aipj} values if the underlying parameters change, or for calculating R_{aipj} values for special radionuclides and age groups when performing the assessments discussed in Section 3.4.4 below.

W_{vip} = the annual average relative dispersion or deposition at the location of the controlling receptor, for release pathway v, as appropriate to exposure pathway p and radionuclide i.

For all tritium pathways, and for the inhalation of any radionuclide: W_{vip} is $(\bar{X}/\bar{Q})_{vp}$, the annual average relative dispersion factor for release pathway v, at the location of the controlling receptor (s/m^3). For the ground-plane exposure pathway, and for all ingestion-related pathways for radionuclides other than tritium: W_{vip} is $(\bar{D}/\bar{Q})_{vp}$, the annual average relative deposition factor for release pathway v, at the location of the controlling receptor (m^{-2}). Values of $(\bar{X}/\bar{Q})_{vp}$ and $(\bar{D}/\bar{Q})_{vp}$ for use in calculating the dose to the currently-defined controlling receptor are included in Table 3-7.

$\tilde{Q}^{i}_{iv}$= the cumulative release of radionuclide i from release pathway v, during the period of interest (μCi). For the purpose of implementing the controls of Section 3.1.4, only I-131, I-133, tritium, and all radionuclides in particulate form with half-lives greater than 8 days should be included in this calculation. In any dose assessment using the methods of this sub-section, only radionuclides detectable above background in their respective samples should be included in the calculation.

Because the member of the public dose limit is on a per-unit basis, the summations extend over all gaseous final release pathways for a given *unit*. For a release pathway discharging materials originating in both reactor units, the activity discharged from the release point may be apportioned between the two units in any reasonable manner, provided that all activity released from the plant site is apportioned to one unit or the other.

The gaseous final release pathways at the plant site, and the release elevation for each, are identified in Table 3-4.

Table 3-7. Attributes of the Controlling Receptor

The locations of members of the public in the vicinity of the plant site, and the exposure pathways associated with those locations, are determined in the Annual Land Use Census. Dispersion and deposition values were calculated based on site meteorological data collected for the years 1971 through 1975.

Based on the Land Use Census of June 7, 1991, the current controlling receptor for the plant site is described as follows.

Sector:	SW
Distance:	1.2 miles
Age Group:	Child
Exposure Pathways:	Ground Plane Inhalation Garden Vegetation Grass/Cow/Meat

Dispersion Factors $(\bar{X}/\bar{Q})_{vp}$:

Ground-Level discharge points:	8.74×10^{-6} s/m^3
Mixed-Mode discharge points:	8.03×10^{-7} s/m^3

Deposition Factors $(\bar{D}/\bar{Q})_{vp}$:

Ground-Level discharge points:	2.64×10^{-8} m^{-2}
Mixed-Mode discharge points:	1.05×10^{-8} m^{-2}

This location represents the residence with the highest annual average X/Q and D/Q factors in the vicinity of the FNP. The referenced Land Use Census identified no locations where animals are maintained for milk within 5 miles of the plant site; thus, it is very unlikely that any real dairy location (which would be beyond 5 miles) would have a higher potential dose impact than the real residence location selected.

3.4.4 Dose Calculations to Support Other Requirements

Case 1: Under Technical Specification 6.6.1 {10 CFR 50.72 and 10 CFR 50.73}, a radiological impact assessment may be required to support evaluation of a reportable event.

Dose calculations may be performed using the equations in Section 3.4.3, with the substitution of the dispersion and deposition parameters [(X/Q) and (D/Q)] for the period covered by the report, and using the appropriate pathway dose factors (R_{aipj}) for the receptor of interest. Methods for calculating (X/Q) and (D/Q) from meteorological data are presented in Chapter 8.

The values of R_{aipj} presented in Table 3-8 through Table 3-11 are applicable only to the currently-defined controlling receptor, so that when dose calculations must be performed for a different receptor, R_{aipj} values applicable to that receptor must first be calculated. Methods and parameters for calculating R_{aipj} for radionuclides and age groups other than those required in Section 3.4.3 are presented in Chapter 9. When calculating R_{aipj} for evaluation of an event, pathway and usage factors specific to the receptor involved in the event may be used in place of the values in Chapter 9, if the specific values are known.

Case 2: A dose calculation is required to evaluate the results of the Land Use Census, under the provisions of Section 4.1.2.

In the event that the Land Use Census reveals that exposure pathways have changed at previously-identified locations, or if new locations are identified, it may be necessary to calculate doses at two or more locations to determine which should be designated as the controlling receptor. Such dose calculations may be performed using the equations in Section 3.4.3, with the substitution of the annual average dispersion and deposition values [($\bar{X}/\bar{Q}$) and ($\bar{D}/\bar{Q}$)] for the locations of interest, and using the appropriate pathway dose factors (R_{aipj}) for the receptors of interest.

Methods for calculating (X/Q) and (D/Q) from meteorological data are presented in Chapter 8. The values of R_{aipj} presented in Table 3-8 through Table 3-11 are applicable only to the currently-defined controlling receptor, so that when dose calculations must be performed for a different receptor, R_{aipj} values applicable to that receptor must first be calculated. Methods and parameters for calculating R_{aipj} for radionuclides and age

groups other than those required in Section 3.4.3 are presented in Chapter 9.

Case 3: Under Section 5.2, a dose calculation is required to support determination of total dose to a receptor of age group other than that currently defined as the controlling receptor.

Dose calculations shall be performed using the equations in Section 3.4.3, using the dispersion and deposition parameters defined in Table 3-7 for the controlling receptor, but substituting the appropriate pathway dose factors (R_{aipj}) for the receptor age group of interest.

The values of R_{aipj} presented in Table 3-8 through Table 3-11 are applicable only to the currently-defined controlling receptor, so that when dose calculations must be performed for a different receptor age group, R_{aipj} values applicable to that receptor must first be calculated. Methods and parameters for calculating R_{aipj} for radionuclides and age groups other than those required in Section 3.4.3 are presented in Chapter 9.

Table 3-8. R_{aipj} for Ground Plane Pathway, All Age Groups

Nuclide	T. Body	Skin
H-3	0.00	0.00
Cr-51	4.66E+06	5.51E+06
Mn-54	1.39E+09	1.63E+09
Fe-55	0.00	0.00
Fe-59	2.73E+08	3.21E+08
Co-58	3.79E+08	4.44E+08
Co-60	2.15E+10	2.53E+10
Ni-63	0.00	0.00
Zn-65	7.47E+08	8.59E+08
Rb-86	8.99E+06	1.03E+07
Sr-89	2.16E+04	2.51E+04
Sr-90	0.00	0.00
Y-91	1.07E+06	1.21E+06
Zr-95	2.45E+08	2.84E+08
Nb-95	1.37E+08	1.61E+08
Ru-103	1.08E+08	1.26E+08
Ru-106	4.22E+08	5.07E+08
Ag-110m	3.44E+09	4.01E+09
Sb-124	5.98E+08	6.90E+08
Sb-125	2.34E+09	2.64E+09
Te-125m	1.55E+06	2.13E+06
Te-127m	9.16E+04	1.08E+05
Te-129m	1.98E+07	2.31E+07
I-131	1.72E+07	2.09E+07
I-133	2.45E+06	2.98E+06
Cs-134	6.86E+09	8.00E+09
Cs-136	1.51E+08	1.71E+08
Cs-137	1.03E+10	1.20E+10
Ba-140	2.05E+07	2.35E+07
Ce-141	1.37E+07	1.54E+07
Ce-144	6.95E+07	8.04E+07
Pr-143	0.00	0.00
Nd-147	8.39E+06	1.01E+07

1. Units are $m^2 \cdot (mrem/yr)/(\mu Ci/s)$.
2. The values in the Total Body column also apply to the Bone, Liver, Thyroid, Kidney, Lung, and GI-LLI organs.
3. This table also supports the calculations of Section 6.2.

Table 3-9. R_{aipj} for Inhalation Pathway, Child Age Group

Nuclide	Bone	Liver	T. Body	Thyroid	Kidney	Lung	GI-LLI
H-3	0.00	1.12E+03	1.12E+03	1.12E+03	1.12E+03	1.12E+03	1.12E+03
Cr-51	0.00	0.00	1.54E+02	8.55E+01	2.43E+01	1.70E+04	1.08E+03
Mn-54	0.00	4.29E+04	9.51E+03	0.00	1.00E+04	1.58E+06	2.29E+04
Fe-55	4.74E+04	2.52E+04	7.77E+03	0.00	0.00	1.11E+05	2.87E+03
Fe-59	2.07E+04	3.34E+04	1.67E+04	0.00	0.00	1.27E+06	7.07E+04
Co-58	0.00	1.77E+03	3.16E+03	0.00	0.00	1.11E+06	3.44E+04
Co-60	0.00	1.31E+04	2.26E+04	0.00	0.00	7.07E+06	9.62E+04
Ni-63	8.21E+05	4.63E+04	2.80E+04	0.00	0.00	2.75E+05	6.33E+03
Zn-65	4.26E+04	1.13E+05	7.03E+04	0.00	7.14E+04	9.95E+05	1.63E+04
Rb-86	0.00	1.98E+05	1.14E+05	0.00	0.00	0.00	7.99E+03
Sr-89	5.99E+05	0.00	1.72E+04	0.00	0.00	2.16E+06	1.67E+05
Sr-90	1.01E+08	0.00	6.44E+06	0.00	0.00	1.48E+07	3.43E+05
Y-91	9.14E+05	0.00	2.44E+04	0.00	0.00	2.63E+06	1.84E+05
Zr-95	1.90E+05	4.18E+04	3.70E+04	0.00	5.96E+04	2.23E+06	6.11E+04
Nb-95	2.35E+04	9.18E+03	6.55E+03	0.00	8.62E+03	6.14E+05	3.70E+04
Ru-103	2.79E+03	0.00	1.07E+03	0.00	7.03E+03	6.62E+05	4.48E+04
Ru-106	1.36E+05	0.00	1.69E+04	0.00	1.84E+05	1.43E+07	4.29E+05
Ag-110m	1.69E+04	1.14E+04	9.14E+03	0.00	2.12E+04	5.48E+06	1.00E+05
Sb-124	0.00	0.00	0.00	0.00	0.00	0.00	0.00
Sb-125	0.00	0.00	0.00	0.00	0.00	0.00	0.00
Te-125m	6.73E+03	2.33E+03	9.14E+02	1.92E+03	0.00	4.77E+05	3.38E+04
Te-127m	2.49E+04	8.55E+03	3.02E+03	6.07E+03	6.36E+04	1.48E+06	7.14E+04
Te-129m	1.92E+04	6.85E+03	3.04E+03	6.33E+03	5.03E+04	1.76E+06	1.82E+05
I-131	4.81E+04	4.81E+04	2.73E+04	1.62E+07	7.88E+04	0.00	2.84E+03
I-133	1.66E+04	2.03E+04	7.70E+03	3.85E+06	3.38E+04	0.00	5.48E+03
Cs-134	6.51E+05	1.01E+06	2.25E+05	0.00	3.30E+05	1.21E+05	3.85E+03
Cs-136	6.51E+04	1.71E+05	1.16E+05	0.00	9.55E+04	1.45E+04	4.18E+03
Cs-137	9.07E+05	8.25E+05	1.28E+05	0.00	2.82E+05	1.04E+05	3.62E+03
Ba-140	7.40E+04	6.48E+01	4.33E+03	0.00	2.11E+01	1.74E+06	1.02E+05
Ce-141	3.92E+04	1.95E+04	2.90E+03	0.00	8.55E+03	5.44E+05	5.66E+04
Ce-144	6.77E+06	2.12E+06	3.61E+05	0.00	1.17E+06	1.20E+07	3.89E+05
Pr-143	1.85E+04	5.55E+03	9.14E+02	0.00	3.00E+03	4.33E+05	9.73E+04
Nd-147	1.08E+04	8.73E+03	6.81E+02	0.00	4.81E+03	3.28E+05	8.21E+04

Units are (mrem/yr)/(μCi/m^3) for all radionuclides.

Table 3-10. R_{aipj} for Cow Meat Pathway, Child Age Group

Nuclide	Bone	Liver	T. Body	Thyroid	Kidney	Lung	GI-LLI
H-3	0.00	2.34E+02	2.34E+02	2.34E+02	2.34E+02	2.34E+02	2.34E+02
Cr-51	0.00	0.00	8.79E+03	4.88E+03	1.33E+03	8.91E+03	4.66E+05
Mn-54	0.00	8.01E+06	2.13E+06	0.00	2.25E+06	0.00	6.72E+06
Fe-55	4.57E+08	2.42E+08	7.51E+07	0.00	0.00	1.37E+08	4.49E+07
Fe-59	3.76E+08	6.09E+08	3.03E+08	0.00	0.00	1.77E+08	6.34E+08
Co-58	0.00	1.64E+07	5.02E+07	0.00	0.00	0.00	9.58E+07
Co-60	0.00	6.93E+07	2.04E+08	0.00	0.00	0.00	3.84E+08
Ni-63	2.91E+10	1.56E+09	9.91E+08	0.00	0.00	0.00	1.05E+08
Zn-65	3.75E+08	1.00E+09	6.22E+08	0.00	6.30E+08	0.00	1.76E+08
Rb-86	0.00	5.77E+08	3.55E+08	0.00	0.00	0.00	3.71E+07
Sr-89	4.82E+08	0.00	1.38E+07	0.00	0.00	0.00	1.87E+07
Sr-90	1.04E+10	0.00	2.64E+09	0.00	0.00	0.00	1.40E+08
Y-91	1.80E+06	0.00	4.82E+04	0.00	0.00	0.00	2.40E+08
Zr-95	2.66E+06	5.85E+05	5.21E+05	0.00	8.38E+05	0.00	6.11E+08
Nb-95	3.10E+06	1.21E+06	8.62E+05	0.00	1.13E+06	0.00	2.23E+09
Ru-103	1.55E+08	0.00	5.96E+07	0.00	3.90E+08	0.00	4.01E+09
Ru-106	4.44E+09	0.00	5.54E+08	0.00	5.99E+09	0.00	6.90E+10
Ag-110m	8.39E+06	5.67E+06	4.53E+06	0.00	1.06E+07	0.00	6.74E+08
Sb-124	0.00	0.00	0.00	0.00	0.00	0.00	0.00
Sb-125	0.00	0.00	0.00	0.00	0.00	0.00	0.00
Te-125m	5.69E+08	1.54E+08	7.59E+07	1.60E+08	0.00	0.00	5.49E+08
Te-127m	1.77E+09	4.78E+08	2.11E+08	4.24E+08	5.06E+09	0.00	1.44E+09
Te-129m	1.79E+09	5.00E+08	2.78E+08	5.77E+08	5.26E+09	0.00	2.18E+09
I-131	1.65E+07	1.66E+07	9.46E+06	5.50E+09	2.73E+07	0.00	1.48E+06
I-133	5.67E-01	7.02E-01	2.66E-01	1.30E+02	1.17E+00	0.00	2.83E-01
Cs-134	9.22E+08	1.51E+09	3.19E+08	0.00	4.69E+08	1.68E+08	8.16E+06
Cs-136	1.62E+07	4.46E+07	2.88E+07	0.00	2.37E+07	3.54E+06	1.57E+06
Cs-137	1.33E+09	1.28E+09	1.88E+08	0.00	4.16E+08	1.50E+08	7.99E+06
Ba-140	4.38E+07	3.84E+04	2.56E+06	0.00	1.25E+04	2.29E+04	2.22E+07
Ce-141	2.22E+04	1.11E+04	1.64E+03	0.00	4.86E+03	0.00	1.38E+07
Ce-144	2.32E+06	7.26E+05	1.24E+05	0.00	4.02E+05	0.00	1.89E+08
Pr-143	3.34E+04	1.00E+04	1.66E+03	0.00	5.43E+03	0.00	3.60E+07
Nd-147	1.17E+04	9.47E+03	7.33E+02	0.00	5.19E+03	0.00	1.50E+07

Units are (mrem/yr)/(μCi/m^3) for tritium, and m^2·(mrem/yr)/(μCi/s) for all other radionuclides.

Table 3-11. R_{aipj} for Garden Vegetation Pathway, Child Age Group

Nuclide	Bone	Liver	T.Body	Thyroid	Kidney	Lung	GI-LLI
H-3	0.00	4.01E+03	4.01E+03	4.01E+03	4.01E+03	4.01E+03	4.01E+03
Cr-51	0.00	0.00	1.17E+05	6.50E+04	1.78E+04	1.19E+05	6.21E+06
Mn-54	0.00	6.65E+08	1.77E+08	0.00	1.86E+08	0.00	5.58E+08
Fe-55	8.01E+08	4.25E+08	1.32E+08	0.00	0.00	2.40E+08	7.87E+07
Fe-59	3.98E+08	6.43E+08	3.20E+08	0.00	0.00	1.86E+08	6.70E+08
Co-58	0.00	6.44E+07	1.97E+08	0.00	0.00	0.00	3.76E+08
Co-60	0.00	3.78E+08	1.12E+09	0.00	0.00	0.00	2.10E+09
Ni-63	3.95E+10	2.11E+09	1.34E+09	0.00	0.00	0.00	1.42E+08
Zn-65	8.13E+08	2.16E+09	1.35E+09	0.00	1.36E+09	0.00	3.80E+08
Rb-86	0.00	4.52E+08	2.78E+08	0.00	0.00	0.00	2.91E+07
Sr-89	3.60E+10	0.00	1.03E+09	0.00	0.00	0.00	1.39E+09
Sr-90	1.24E+12	0.00	3.15E+11	0.00	0.00	0.00	1.67E+10
Y-91	1.86E+07	0.00	4.99E+05	0.00	0.00	0.00	2.48E+09
Zr-95	3.86E+06	8.48E+05	7.55E+05	0.00	1.21E+06	0.00	8.85E+08
Nb-95	4.10E+05	1.60E+05	1.14E+05	0.00	1.50E+05	0.00	2.96E+08
Ru-103	1.53E+07	0.00	5.90E+06	0.00	3.86E+07	0.00	3.97E+08
Ru-106	7.45E+08	0.00	9.30E+07	0.00	1.01E+09	0.00	1.16E+10
Ag-110m	3.21E+07	2.17E+07	1.73E+07	0.00	4.04E+07	0.00	2.58E+09
Sb-124	0.00	0.00	0.00	0.00	0.00	0.00	0.00
Sb-125	0.00	0.00	0.00	0.00	0.00	0.00	0.00
Te-125m	3.51E+08	9.50E+07	4.67E+07	9.84E+07	0.00	0.00	3.38E+08
Te-127m	1.32E+09	3.56E+08	1.57E+08	3.16E+08	3.77E+09	0.00	1.07E+09
Te-129m	8.41E+08	2.35E+08	1.31E+08	2.71E+08	2.47E+09	0.00	1.03E+09
I-131	1.43E+08	1.44E+08	8.17E+07	4.75E+10	2.36E+08	0.00	1.28E+07
I-133	3.53E+06	4.37E+06	1.65E+06	8.11E+08	7.28E+06	0.00	1.76E+06
Cs-134	1.60E+10	2.63E+10	5.55E+09	0.00	8.15E+09	2.93E+09	1.42E+08
Cs-136	8.24E+07	2.27E+08	1.47E+08	0.00	1.21E+08	1.80E+07	7.96E+06
Cs-137	2.39E+10	2.29E+10	3.38E+09	0.00	7.46E+09	2.68E+09	1.43E+08
Ba-140	2.77E+08	2.42E+05	1.61E+07	0.00	7.89E+04	1.45E+05	1.40E+08
Ce-141	6.56E+05	3.27E+05	4.86E+04	0.00	1.43E+05	0.00	4.08E+08
Ce-144	1.27E+08	3.98E+07	6.78E+06	0.00	2.21E+07	0.00	1.04E+10
Pr-143	1.46E+05	4.37E+04	7.23E+03	0.00	2.37E+04	0.00	1.57E+08
Nd-147	7.15E+04	5.79E+04	4.48E+03	0.00	3.18E+04	0.00	9.17E+07

Units are (mrem/yr)/(μCi/m^3) for tritium, and m^2·(mrem/yr)/(μCi/s) for all other radionuclides.

3.5 GASEOUS EFFLUENT DOSE PROJECTIONS

3.5.1 Thirty-One Day Dose Projections

In order to meet the requirements of the limit for operation of the gaseous radwaste treatment system (see Section 3.1.5), dose projections must be made at least once each 31 days; this applies during periods in which a discharge to areas at or beyond the SITE BOUNDARY of gaseous effluents containing radioactive materials occurs or is expected.

Projected 31-day air doses and doses to individuals due to gaseous effluents may be determined as follows:

For air doses:

$$D_{\beta p} = \left(\frac{D_{\beta c}}{t}\right) \times 31 + D_{\beta a}$$
$$D_{\gamma p} = \left(\frac{D_{\gamma c}}{t}\right) \times 31 + D_{\gamma a} \qquad (3.17)$$

For individual doses:

$$D_{op} = \left(\frac{D_{oc}}{t}\right) \times 31 + D_{oa} \qquad (3.18)$$

where:

$D_{\beta p}$ = the projected air dose due to beta emissions from noble gases, for the next 31 days of gaseous releases.

$D_{\beta c}$ = the cumulative air dose due to beta emissions from noble gas releases that have occurred in the elapsed portion of the current quarter, plus the release under consideration.

$D_{\beta a}$ = the anticipated air dose due to beta emissions from noble gas releases, contributed by any planned activities during the next 31-day period, if those activities will result in gaseous releases that are in addition to routine gaseous effluents. If only routine gaseous effluents are anticipated, $D_{\beta a}$ may be set to zero.

$D_{\gamma p}$ = the projected air dose due to gamma emissions from noble gases for the next 31 days of gaseous releases.

$D_{\gamma c}$ = the cumulative air dose due to gamma emissions from noble gas releases that have occurred in the elapsed portion of the current quarter, plus the release under consideration.

$D_{\gamma a}$ = the anticipated air dose due to gamma emissions from noble gas releases, contributed by any planned activities during the next 31-day period, if those activities will result in gaseous releases that are in addition to routine gaseous effluents. If only routine gaseous effluents are anticipated, $D_{\gamma a}$ may be set to zero.

D_{op} = the projected dose to the total body or organ o, due to releases of I-131, I-133, tritium, and particulates for the next 31 days of gaseous releases.

D_{oc} = the cumulative dose to the total body or organ o, due to releases of I-131, I-133, tritium, and particulates that have occurred in the elapsed portion of the current quarter, plus the release under consideration.

D_{oa} = the anticipated dose to the total body or organ o, due to releases of I-131, I-133, tritium, and particulates, contributed by any planned activities during the next 31-day period, if those activities will result in gaseous releases that are in addition to routine gaseous effluents. If only routine gaseous effluents are anticipated, D_{oa} may be set to zero.

t = the number of whole or partial days elapsed into the current quarter, including the time to the end of the release under consideration (even if the release continues into the next quarter).

3.5.2 Dose Projections for Specific Releases

Dose projections may be performed for a particular release by performing a pre-release dose calculation assuming that the planned release will proceed as anticipated. For air dose and individual dose projections due to gaseous effluent releases, follow the methodology of Section 3.4, using sample analysis results for the gaseous stream to be released, and parameter values expected to exist during the release period.

3.6 DEFINITIONS OF GASEOUS EFFLUENT TERMS

Term	Definition	Section of Initial Use
AG =	the administrative allocation factor for gaseous streams, applied to divide the gaseous release limit among all the release pathways [unitless].	3.3.2.1
AG_s =	the administrative allocation factor for gaseous source stream s, applied to divide the gaseous release limit among all the release pathways [unitless].	3.3.3
AG_v =	the administrative allocation factor for gaseous release pathway v, applied to divide the gaseous release limit among all the release pathways [unitless].	3.3.2.2
c =	the setpoint of the radioactivity monitor measuring the concentration of radioactivity in the effluent line prior to release [μCi/mL].	3.3.2.1
c_{ns} =	the calculated noble gas effluent monitor setpoint for gaseous source stream s [μCi/mL].	3.3.3
c_{nv} =	the calculated noble gas effluent monitor setpoint for release pathway v [μCi/mL].	3.3.2.2
D_{ja} =	the dose to organ j of an individual in age group a, due to gaseous releases of I-131, I-133, tritium, and radionuclides in particulate form with half-lives greater than 8 days [mrem].	3.4.3
D_{oa} =	the anticipated dose to organ o due to releases of non-noble-gas radionuclides, contributed by any planned activities during the next 31-day period [mrem].	3.5.1
D_{oc} =	the cumulative dose to organ o due to releases of non-noble-gas radionuclides that have occurred in the elapsed portion of the current quarter, plus the release under consideration [mrem].	3.5.1

Term	Definition	Section of Initial Use
D_{op} =	the projected dose to organ o due to the next 31 days of gaseous releases of non-noble-gas radionuclides [mrem].	3.5.1
D_{β} =	the air dose due to beta emissions from noble gas radionuclides [mrad].	3.4.2
$D_{\beta a}$ =	the anticipated air dose due to beta emissions from noble gas releases, contributed by any planned activities during the next 31-day period [mrad].	3.5.1
$D_{\beta c}$ =	the cumulative air dose due to beta emissions from noble gas releases that have occurred in the elapsed portion of the current quarter, plus the release under consideration [mrad].	3.5.1
$D_{\beta p}$ =	the projected air dose due to beta emissions from noble gases, for the next 31 days of gaseous releases [mrad].	3.5.1
D_{γ} =	the air dose due to gamma emissions from noble gas radionuclides [mrad].	3.4.2
$D_{\gamma a}$ =	the anticipated air dose due to gamma emissions from noble gas releases, contributed by any planned activities during the next 31-day period [mrad].	3.5.1
$D_{\gamma c}$ =	the cumulative air dose due to gamma emissions from noble gas releases that have occurred in the elapsed portion of the current quarter, plus the release under consideration [mrad].	3.5.1
$D_{\gamma p}$ =	the projected air dose due to gamma emissions from noble gases, for the next 31 days of gaseous releases [mrad].	3.5.1

Term	Definition	Section of Initial Use
$(\bar{D}/\bar{Q})_{vp}$ =	the annual average relative deposition factor for release pathway v, at the location of the controlling receptor, from Table 3-7 [m^{-2}].	3.4.3
DR_k =	the skin dose rate at the time of the release [mrem/y].	3.4.1.1
DR_o =	the dose rate to organ o at the time of the release [mrem/y].	3.4.1.2
DR_t =	the total body dose rate at the time of the release [mrem/y].	3.4.1.1
f_{av} =	the maximum anticipated actual discharge flowrate for release pathway v during the period of the planned release [mL/s].	3.3.2.2
f_{as} =	the maximum anticipated actual discharge flowrate for gaseous source stream s during the period of the planned release [mL/s].	3.3.3
K_i =	the total body dose factor due to gamma emissions from noble gas radionuclide i, from Table 3-5 [(mrem/y)/(μCi/m^3)].	3.3.2.2
L_i =	the skin dose factor due to beta emissions from noble gas radionuclide i, from Table 3-5 [(mrem/y)/(μCi/m^3)].	3.3.2.2
M_i =	the air dose factor due to gamma emissions from noble gas radionuclide i, from Table 3-5 [(mrad/y)/(μCi/m^3)].	3.4.2
N =	the number of simultaneously active gaseous release pathways [unitless].	3.3.4

Term	Definition	Section of Initial Use
N_i =	the air dose factor due to beta emissions from noble gas radionuclide i, from Table 3-5 [(mrad/y)/(μCi/m^3)].	3.4.2
P_{io} =	the site-specific dose factor for radionuclide i (I-131, I-133, tritium, and radionuclides in particulate form with half-lives greater than 8 days) and organ o. The values of P_{io} are equal to the site-specific R_{aipj} values presented in Table 3-9 [(mrem/y)/(μCi/m^3)].	3.4.1.2
Q_{iv} =	the release rate of noble gas radionuclide i from release pathway v during the period of interest [μCi/s].	3.3.2.2
Q'_{iv}=	the release rate of radionuclide i (I-131, I-133, tritium, and radionuclides in particulate form with half-lives greater than 8 days) from gaseous release pathway v during the period of interest [μCi/s].	3.4.1.2
$\tilde{Q}_{iv}$ =	the cumulative release of noble gas radionuclide i from release pathway v during the period of interest [μCi].	3.4.2
$\tilde{Q}'_{iv}$=	the cumulative release of non-noble-gas radionuclide i from release pathway v, during the period of interest [μCi].	3.4.3
R_{aipj} =	the site-specific dose factor for age group a, radionuclide i, exposure pathway p, and organ j. Values and units of R_{aipj} for each exposure pathway, age group, and radionuclide that may arise in calculations for implementing Section 3.1.4 are listed in Table 3-8 through Table 3-11.	3.4.3
R_k =	the ratio of the skin dose rate limit for noble gases, to the skin dose rate due to noble gases in the release under consideration [unitless].	3.3.2.1

Term	Definition	Section of Initial Use
R_t =	the ratio of the total body dose rate limit for noble gases, to the total body dose rate due to noble gases in the release under consideration [unitless].	3.3.2.1
r_k =	the ratio of the skin dose rate limit for noble gases, to the skin dose rate due to noble gases in the source stream under consideration [unitless].	3.3.3.1
r_t =	the ratio of the total body dose rate limit for noble gases, to the total body dose rate due to noble gases in the source stream under consideration [unitless].	3.3.3.1
SF =	the safety factor used in gaseous setpoint calculations to compensate for statistical fluctuations and errors of measurement [unitless].	3.3.2.2
t =	the number of whole or partial days elapsed in the current quarter, including the period of the release under consideration.	3.5.1
W_{vip} =	the annual average relative dispersion $[(\bar{X}/\bar{Q})_{vp}]$ or deposition $[(\bar{D}/\bar{Q})_{vp}]$ at the location of the controlling receptor, for release pathway v, as appropriate to exposure pathway p and radionuclide i.	3.4.3
X =	the noble gas concentration for the release under consideration [μCi/mL].	3.3.2.1
X_{ir} =	the concentration of radionuclide i applicable to active gaseous release pathway r [μCi/mL].	3.3.4
X_{is} =	the measured concentration of radionuclide i in gaseous source stream s [μCi/mL].	3.3.3
X_{iv} =	the measured concentration of radionuclide i in gaseous stream v [μCi/mL].	3.3.2.2

Term	Definition	Section of Initial Use
(X/Q) =	the highest relative concentration at any point at or beyond the SITE BOUNDARY [s/m^3].	3.3.2.1
$(\bar{X}/\bar{Q})_{rb}$ =	the annual average SITE BOUNDARY relative concentration applicable to active gaseous release pathway r [s/m^3].	3.3.4
$(\bar{X}/\bar{Q})_{vb}$ =	the highest annual average relative concentration at the SITE BOUNDARY for the discharge point of release pathway v, from Table 3-4 [s/m^3].	3.3.2.2
$(\bar{X}/\bar{Q})_{vp}$ =	annual average relative dispersion factor for release pathway v, at the location of the controlling receptor, from Table 3-7 [s/m^3].	3.4.3

CHAPTER 4

RADIOLOGICAL ENVIRONMENTAL MONITORING PROGRAM

4.1 LIMITS OF OPERATION

The following limits are the same for both units at the site. Thus, a single program including monitoring, land use survey, and quality assurance serves both units.

4.1.1 Radiological Environmental Monitoring

In accordance with Technical Specification 6.8.3.f(i) {this ODCM}, the Radiological Environmental Monitoring Program (REMP) shall be conducted as specified in Table 4-1.

4.1.1.1 Applicability

This control applies at all times.

4.1.1.2 Actions

4.1.1.2.1 With the REMP not being conducted as specified in Table 4-1, submit to the Nuclear Regulatory Commission (NRC), in the Annual Radiological Environmental Operating Report, a description of the reasons for not conducting the program as required and the plans for preventing a recurrence. Deviations from the required sampling schedule are permitted if specimens are unobtainable due to hazardous conditions, unavailability, inclement weather, equipment malfunction, or other just reasons. If deviations are due to equipment malfunction, efforts shall be made to complete corrective action prior to the end of the next sampling period.

4.1.1.2.2 With the confirmed[1] measured level of radioactivity as a result of plant effluents in an environmental sampling medium specified in Table 4-1 exceeding the reporting levels of Table 4-2 when averaged over any calendar quarter, submit within 30 days a Special Report to the NRC pursuant to Technical Specification 6.9.2 {10 CFR 50.4}. The Special Report shall identify the cause(s) for exceeding the limit(s) and define the corrective action(s) to be taken to reduce radioactive effluents so that the potential annual dose to a

---

1 Defined as confirmed by reanalysis of the original sample, or analysis of a duplicate or new sample, as appropriate. The results of the confirmatory analysis shall be completed at the earliest time consistent with the analysis.

MEMBER OF THE PUBLIC is less than the calendar year limits of Sections 2.1.3, 3.1.3, and 3.1.4. The methodology and parameters used to estimate the potential annual dose to a MEMBER OF THE PUBLIC shall be indicated in the Special Report.

When more than one of the radionuclides in Table 4-2 are detected in the sampling medium, this report shall be submitted if:

$$\frac{concentration\ (1)}{reporting\ level\ (1)} + \frac{concentration\ (2)}{reporting\ level\ (2)} + \ldots \geq 1.0$$

When radionuclides other than those in Table 4-2 are detected and are the result of plant effluents, this Special Report shall be submitted if the potential annual dose to a MEMBER OF THE PUBLIC is equal to or greater than the calendar year limits stated in Sections 2.1.3, 3.1.3, and 3.1.4. This Special Report is not required if the measured level of radioactivity was not the result of plant effluents; however, in such an event, the condition shall be described in the Annual Radiological Environmental Operating Report. The levels of naturally-occurring radionuclides which are not included in the plant's effluent releases need not be reported.

4.1.1.2.3 If adequate samples of milk, or during the growing season, forage or fresh leafy vegetation, can no longer be obtained from one or more of the sample locations required by Table 4-1, or if the availability is frequently or persistently wanting, efforts shall be made: to identify specific locations for obtaining suitable replacement samples; and to add any replacement locations to the REMP given in the ODCM within 30 days. The specific locations from which samples became unavailable may be deleted from the REMP. Pursuant to Technical Specification 6.14 {5.5.1}, documentation shall be submitted in the next Annual Radioactive Effluent Release Report {Radioactive Effluent Release Report} for the change(s) in the ODCM, including revised figure(s) and table(s) reflecting the changes to the location(s), with supporting information identifying the cause of the unavailability of samples and justifying the selection of any new location(s).

4.1.1.2.4 This control does not affect shutdown requirements or MODE changes.

4.1.1.3 Surveillance Requirements

The REMP samples shall be collected pursuant to Table 4-1 from the locations described in Section 4.2, and shall be analyzed pursuant to the requirements of Table 4-1 and Table 4-3. Program changes may be initiated based on operational experience.

Analyses shall be performed in such a manner that the stated MINIMUM DETECTABLE CONCENTRATIONs (MDCs) will be achieved under routine conditions. Occasionally background fluctuations, unavoidable small sample sizes, the presence of interfering radionuclides, or other uncontrollable circumstances may render these MDCs unachievable. In such cases, the contributing factors will be identified and described in the Annual Radiological Environmental Operating Report.

4.1.1.4 Basis

The REMP required by this control provides representative measurements of radiation and of radioactive materials in those exposure pathways, and for those radionuclides, which lead to the highest potential radiation exposures of MEMBERS OF THE PUBLIC resulting from the plant operation. The REMP implements Section IV.B.2, Appendix I, 10 CFR 50, and thereby supplements the radiological effluent monitoring program by measuring concentrations of radioactive materials and levels of radiation, which may then be compared with those expected on the basis of the effluent measurements and modeling of the environmental exposure pathways.

The detection capabilities required by Table 4-3 are within state-of-the-art for routine environmental measurements in industrial laboratories.

Table 4-1. Radiological Environmental Monitoring Program

Exposure Pathway and/or Sample	Number of Samples and Sample Locations*	Sampling and Collection Frequency	Type and Frequency of Analysis
1. AIRBORNE			
Particulates Indicator Control	 3 2	Continuous operation of sampler with sample collection weekly.	Particulate sampler. Analyze for gross beta radioactivity ≥24 hours following filter change. Perform gamma isotopic analysis on each sample when gross beta activity is >10 times the yearly mean of control samples. Perform gamma isotopic analysis on composite (by location) sample quarterly.
Radioiodine Indicator Control	 3 2		Radioiodine canister. Analyze weekly for I-131.
2. DIRECT RADIATION			
TLD Indicator I Indicator II (community) Control	 16 16 3	Quarterly.	Gamma dose quarterly.
3. WATERBORNE			
Surface Indicator Control	 1 1	Composite** sample collected monthly.	Gamma isotopic analysis monthly. Tritium analysis of composite (by location) sample quarterly.
Ground Indicator Control	 1 1	Quarterly.	Gamma isotopic and tritium analysis of each sample.
Sediment Indicator	 1	Semiannually.	Gamma isotopic analysis of each sample.

Table 4-1 (contd). Radiological Environmental Monitoring Program

Exposure Pathway and/or Sample	Number of Samples and Sample Locations*	Sampling and Collection Frequency	Type and Frequency of Analysis
4. INGESTION			
Milk Indicator Control	 3*** 1	Semimonthly when animals are on pasture; monthly at other times.	Gamma isotopic and I-131 analysis of each sample.
Fish Indicator Control	 1 1	One sample in season, or semiannually if not seasonal. One sample of each of the following species: 1. Game Fish 2. Bottom Feeding Fish	Gamma isotopic analysis on edible portions.
Forage or Leafy Vegetation Indicator Control	 1 1	Grab sample cut from green forage or vegetation monthly.	Gamma isotopic analysis which includes I-131 analysis of each sample.

* Sample locations are shown in Table 4-4, and in Figure 4-1 through Figure 4-4.

** Composite samples shall be collected by collecting an aliquot at intervals not exceeding 2 hours.

*** Up to three sampling locations within 5 miles in different sectors with the highest dose potential will be used as available.

Table 4-2. Reporting Levels for Radioactivity Concentrations in Environmental Samples

Analysis	Reporting Level				
	Water (pCi/L)	Airborne Particulate or Gases (pCi/m^3)	Fish (pCi/kg, wet)	Milk (pCi/L)	Forage or Leafy Vegetation (pCi/kg, wet)
H-3	2 E+4[a]				
Mn-54	1 E+3		3 E+4		
Fe-59	4 E+2		1 E+4		
Co-58	1 E+3		3 E+4		
Co-60	3 E+2		1 E+4		
Zn-65	3 E+2		2 E+4		
Zr-95	4 E+2				
Nb-95	7 E+2				
I-131	2 E+0[b]	9 E-1		3 E+0	1 E+2
Cs-134	3 E+1	1 E+1	1 E+3	6 E+1	1 E+3
Cs-137	5 E+1	2 E+1	2 E+3	7 E+1	2 E+3
Ba-140	2 E+2			3 E+2	
La-140	1 E+2			4 E+2	

a. This is the 40 CFR 141 value for drinking water samples. If no drinking water pathway exists, a value of 3 E+4 pCi/L may be used.

b. If no drinking water pathway exists, a value of 20 pCi/L may be used.

Table 4-3. Values for the Minimum Detectable Concentration

Analysis	Minimum Detectable Concentration (MDC)[a]					
	Water (pCi/L)	Airborne Particulate or Gases (pCi/m^3)	Fish (pCi/kg, wet)	Milk (pCi/L)	Forage or Leafy Vegetation (pCi/kg, wet)	Sediment (pCi/kg, dry)
gross beta	4 E+0	1 E-2				
H-3	2 E+3[b]					
Mn-54	1.5 E+1		1.3 E+2			
Fe-59	3 E+1		2.6 E+2			
Co-58, Co-60	1.5 E+1		1.3 E+2			
Zn-65	3 E+1		2.6 E+2			
Zr-95	3 E+1					
Nb-95	1.5 E+1					
I-131	1 E+0[c]	7 E-2		1 E+0	6 E+1	
Cs-134	1.5 E+1	5 E-2	1.3 E+2	1.5 E+1	6 E+1	1.5 E+2
Cs-137	1.8 E+1	6 E-2	1.5 E+2	1.8 E+1	8 E+1	1.8 E+2
Ba-140	6 E+1			6 E+1		
La-140	1.5 E+1			1.5 E+1		

a. See the definition of MINIMUM DETECTABLE CONCENTRATION in Section 10.1. Other peaks which are measurable and identifiable as plant effluents, together with the radionuclides in this table, shall be analyzed and reported in accordance with Section 7.1.

b. If no drinking water pathway exists, a value of 3 E+3 pCi/L may be used.

c. If no drinking water pathway exists, a value of 1.5 E+1 pCi/L may be used.

4.1.2 Land Use Census

In accordance with Technical Specification 6.8.3.f(ii) {this ODCM}, a land use census shall be conducted and shall identify the location of the nearest milk animal[1] and the nearest permanent residence, in each of the 16 meteorological sectors, within a distance of 5 miles.

4.1.2.1 Applicability

This control applies at all times.

4.1.2.2 Actions

4.1.2.2.1 With a land use census identifying a location(s) which yields a calculated dose or dose commitment greater than values currently being calculated in accordance with Section 3.4.3, identify the new location(s) in the next Annual Radioactive Effluent Release Report {Radioactive Effluent Release Report}.

4.1.2.2.2 With a land use census identifying a location(s) which yields a calculated dose or dose commitment (via the same exposure pathway) 20 percent greater than at a location from which samples are currently being obtained in accordance with Section 4.1.1, add the new location(s) to the REMP within 30 days if samples are available. The sampling location, excluding control station location(s), having the lowest calculated dose or dose commitment (via the same exposure pathway) may be deleted from the REMP if new sampling locations are added. Pursuant to Technical Specification 6.14 {5.5.1} submit in the next Annual Radioactive Effluent Release Report {Radioactive Effluent Release Report} any change(s) in the ODCM, including the revised figure(s) and table(s) reflecting any new location(s) and information supporting the change(s).

4.1.2.2.3 This control does not affect shutdown requirements or MODE changes.

4.1.2.3 Surveillance Requirements

The land use census shall be conducted annually, using that information which will provide good results, such as a door-to-door census, a visual census from automobile or aircraft, consultation with local agriculture authorities, or some combination of these methods, as feasible. Results of the land use census shall be included in the Annual Radiological Environmental Operating Report.

---

1 Defined as a cow or goat that is producing milk for human consumption.

4.1.2.4 Basis

This control is provided to ensure that changes in the use of UNRESTRICTED AREAS are identified and that modifications to the REMP are made if required by the results of this census. This census satisfies the requirements of Section IV.B.3 of Appendix I to 10 CFR Part 50.

4.1.3 Interlaboratory Comparison Program

In accordance with Technical Specification 6.8.3.f(iii) {this ODCM}, analyses shall be performed on radioactive materials supplied as part of an Interlaboratory Comparison Program which satisfies the requirements of Regulatory Guide 4.15, Revision 1, February 1979.

4.1.3.1 Applicability

This control applies at all times.

4.1.3.2 Actions

With analyses not being performed as required by Section 4.1.3, report the corrective actions taken to prevent a recurrence in the Annual Radiological Environmental Operating Report.

This control does not affect shutdown requirements or MODE changes.

4.1.3.3 Surveillance Requirements

A summary of the results obtained as part of the required Interlaboratory Comparison Program shall be included in the Annual Radiological Environmental Operating Report.

4.1.3.4 Basis

The requirement for participation in an approved Interlaboratory Comparison Program is provided to ensure that independent checks on the precision and accuracy of the measurements of radioactive material in environmental sample matrices are performed as part of the quality assurance program for environmental monitoring, in order to demonstrate that the results are reasonably valid for the purposes of Section IV.B.2, Appendix I, 10 CFR 50.

4.2 RADIOLOGICAL ENVIRONMENTAL MONITORING LOCATIONS

Table 4-4, and Figure 4-1 through Figure 4-4 specify the locations at which the measurements and samples are taken for the REMP required by Section 4.1.1.

Table 4-4. Radiological Environmental Monitoring Locations

Exposure Pathway and/or Sample	Sampling Locations*	Sample Identification
	1. AIRBORNE	
Particulates	Indicator Stations:	
	River Intake Structure (ESE-0.8 miles)[1]	PI-0501
	South Perimeter (SSE-1.0 miles)	PI-0701
	Plant Entrance (WSW-0.9 miles)	PI-1101
	North Perimeter (N-0.8 miles)	PI-1601
	Control Stations:	
	Blakely, GA (NE-15 miles)	PB-0215
	Dothan, AL (W-18 miles)	PB-1218
	Neals Landing, FL (SSE-18 miles)[1]	PB-0718
	Community Stations:	
	Georgia Pacific Paper Co. (SSE-3 miles)	PC-0703
	Ashford, AL (WSW-8 miles)	PC-1108
	Columbia, AL (N-5 miles)	PC-1605
Radioiodine	Indicator Stations:	
	River Intake Structure (ESE-0.8 miles)[1]	II-0501
	South Perimeter (SSE-1.0 miles)	II-0701
	Plant Entrance (WSW-0.9 miles)	II-1101
	North Perimeter (N-0.8 miles)	II-1601
	Control Stations:	
	Blakely, GA (NE-15 miles)	IB-0215
	Dothan, AL (W-18 miles)	IB-1218
	Neals Landing, FL (SSE-18 miles)[1]	IB-0718
	Community Stations:	
	Georgia Pacific Paper Co. (SSE-3 miles)[2]	IC-0703
	2. DIRECT RADIATION	
TLD	Indicator I Stations:	
	Plant Perimeter	
	(NNE-0.9 miles)	RI-0101
	(NE- 1.0 miles)	RI-0201
	(ENE-0.9 miles)	RI-0301
	(E- 0.8 miles)	RI-0401
	(ESE-0.8 miles)	RI-0501
	(SE- 1.1 miles)	RI-0601
	(SSE-1.0 miles)	RI-0701
	(S- 1.0 miles)	RI-0801
	(SSW-1.0 miles)	RI-0901
	(SW- 0.9 miles)	RI-1001
	(WSW-0.9 miles)	RI-1101
	(W- 0.8 miles)	RI-1201
	(WNW-0.8 miles)	RI-1301
	(NW- 1.1 miles)	RI-1401
	(NNW-0.9 miles)	RI-1501
	(N- 0.8 miles)	RI-1601

Table 4-4 (contd).Radiological Environmental Monitoring Locations

Exposure Pathway and/or Sample	Sampling Locations*	Sample Identification
TLD (contd)	Control Stations:	
	Blakely, GA (NE-15 miles)	RB-0215
	Neals Landing, FL (SSE-18 miles)	RB-0718
	Dothan, AL (W-15 miles)	RB-1215
	Dothan, AL (W-18 miles)	RB-1218
	Webb, AL (WNW-11 miles)	RB-1311
	Haleburg, AL (N-12 miles)	RB-1612
	Indicator II (Community) Stations:	
	(NNE-4 miles)	RC-0104
	(NE- 4 miles)	RC-0204
	(ENE-4 miles)	RC-0304
	(E- 5 miles)	RC-0405
	(ESE-5 miles)	RC-0505
	(SE- 5 miles)	RC-0605
	(SSE-3 miles)	RC-0703
	(S- 5 miles)	RC-0805
	(SSW-4 miles)	RC-0904
	(SW- 1.2 miles)	RC-1001
	(SW- 5 miles)	RC-1005
	(WSW-4 miles)	RC-1104
	(WSW-8 miles)	RC-1108
	(W- 4 miles)	RC-1204
	(WNW-4 miles)	RC-1304
	(NW- 4 miles)	RC-1404
	(NNW-4 miles)	RC-1504
	(N- 5 miles)	RC-1605
3. WATERBORNE		
Surface	Indicator Station: Georgia Pacific Paper Co. Intake Structure (River Mile - 40)	WRI
	Control Station: Andrew Lock & Dam Upper Pier (River Mile - 47)	WRB
Ground	Indicator Station: Georgia Pacific Paper Co. Well (SSE-4 miles)	WGI-07
	Control Station: Whatley Well (SW-1.2 miles)	WGB-10
Sediment	Indicator Station: Smith's Bend (River Mile - 41)[3]	RSI
	Control Station: Andrews Lock & Dam Reservoir (River Mile - 48)[3]	RSB

Table 4-4 (contd). Radiological Environmental Monitoring Locations

Exposure Pathway and/or Sample	Sampling Locations*	Sample Identification
	4. INGESTION	
Milk	Indicator Station: None (There are no milk animals within 5 miles per the current land use survey)	
	Control Station: Robert Weir Dairy Donaldsonville, GA (SSE-14 miles)	MB-0714
Fish	Indicator Station: Smith Bend (River Mile - 41)[4] Game Fish Bottom Feeding Fish	 FGI FBI
	Control Station: Andrews Lock & Dam Reservoir (River Mile - 48)[4] Game Fish Bottom Feeding Fish	 FGB FBB
Forage or Leafy Vegetation	Indicator Stations: South Southeast Perimeter (SSE-1.0 miles) North Perimeter (N-0.8 miles) South Perimeter (S-1.0 miles)[5] Northeast Perimeter (NE-1.0 miles)[5]	 FI-0701 FI-1601 FI-0801 FI-0201
	Control Station: Dothan, AL (W-18 miles)	FB-1218

* Distance and direction as measured from the centerpoint between Unit 1 and Unit 2 plant vent stacks.

1. Not required by Section 4.1.1. Used as a spare station.

2. Not required by Section 4.1.1. Use for comparison purposes with State of GA EPD.

3. These collections are normally made at river mile 41.3 for the indicator station and mile 47.8 for the control station; however, due to river bottom sediment shifting caused by high flows, dredging, etc., collections may be made from river mile 40 to 42 for the indicator station and from river mile 47 to 49 for the control station.

4. Since a few miles of river water may be needed to obtain adequate fish samples, these river mile positions represent the approximate locations about which the catches are taken. Collections for the indicator station should be from river mile 37.5 to 42.5 and for the control station from river mile 47 to 52. (CAR 2283)

5. Alternate forage plots.

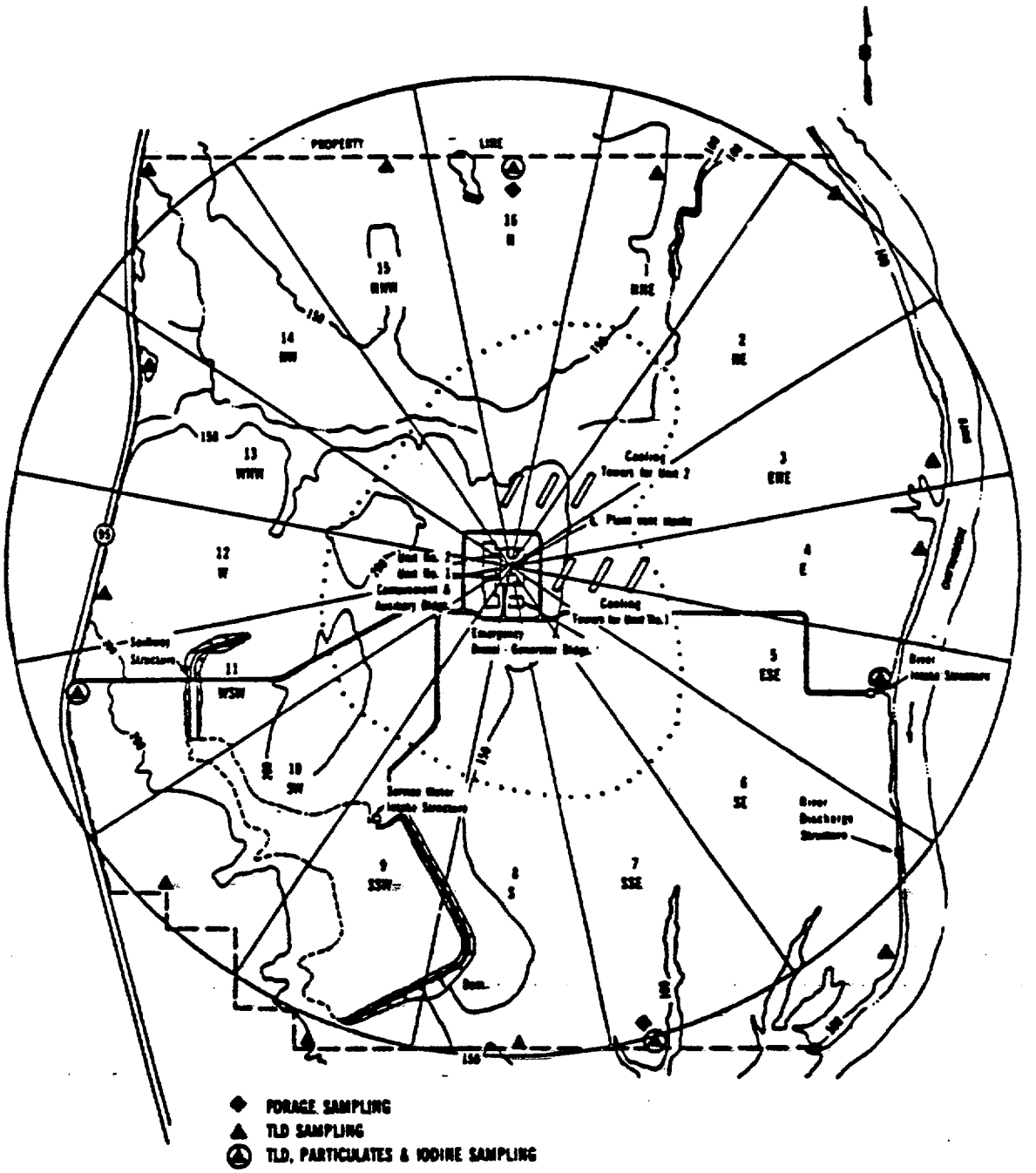

Figure 4-1. Airborne Sampling Locations, 0-5000 feet

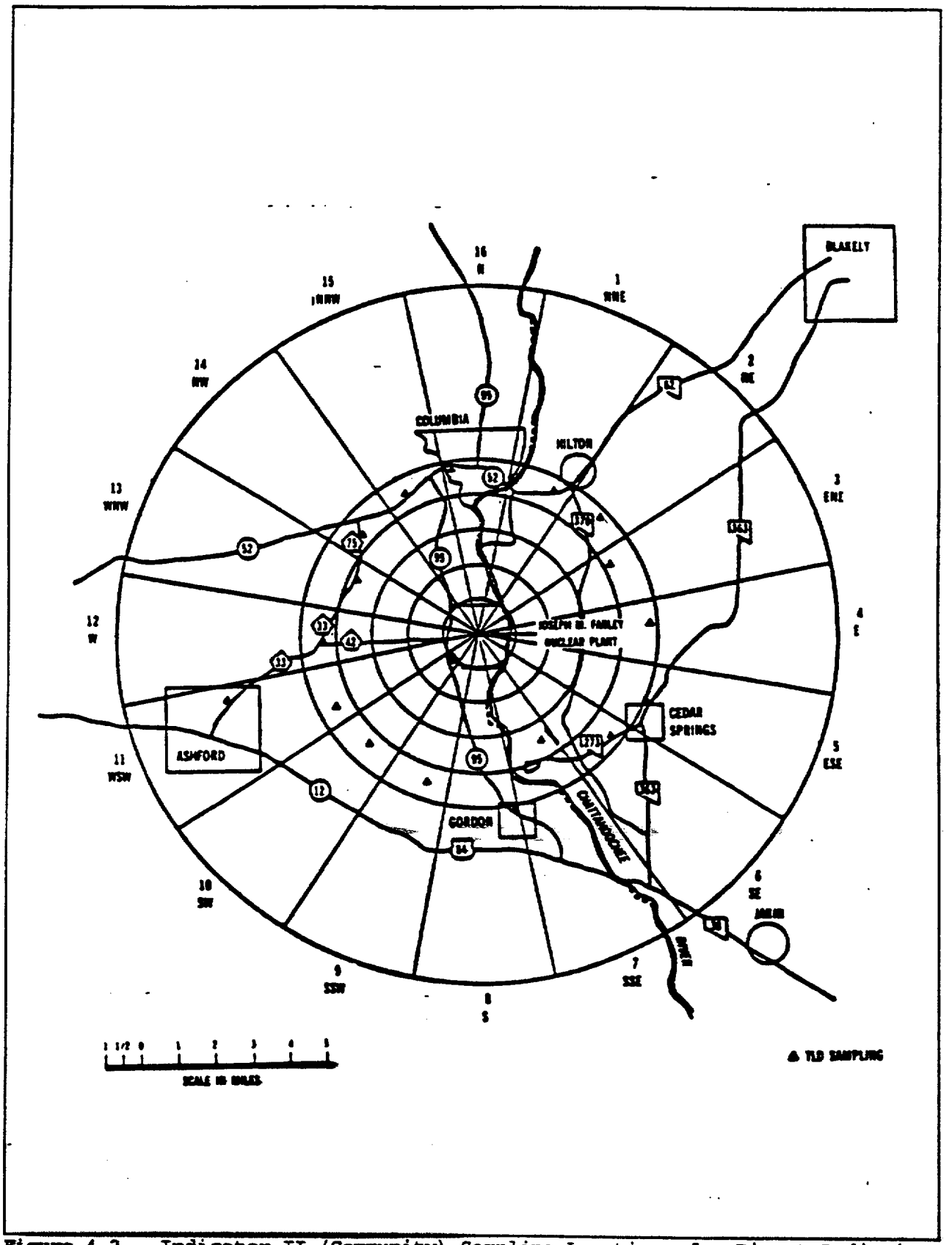

Figure 4-2. Indicator II (Community) Sampling Locations for Direct Radiation

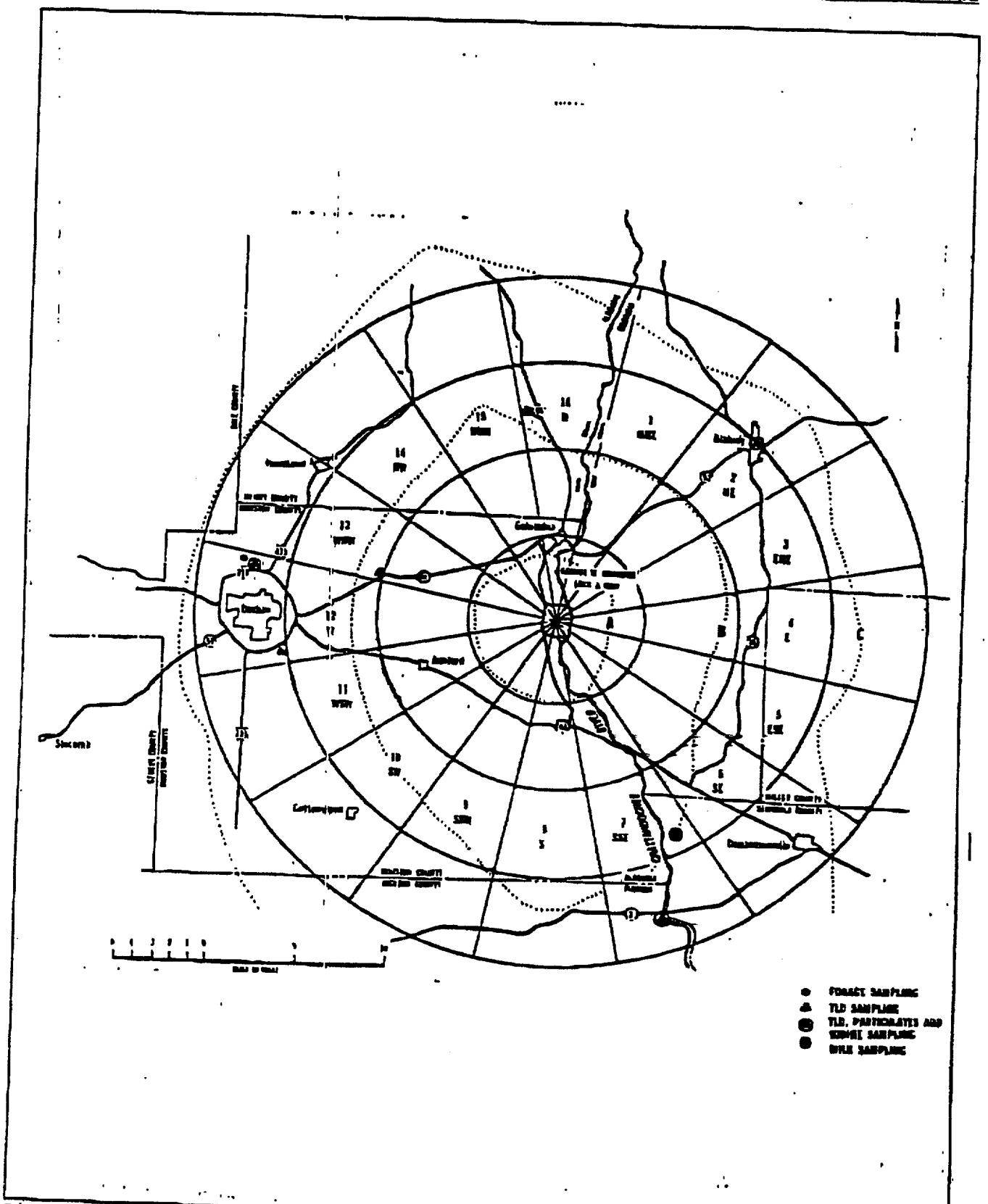

Figure 4-3. Airborne Sampling Locations, 0-20 miles

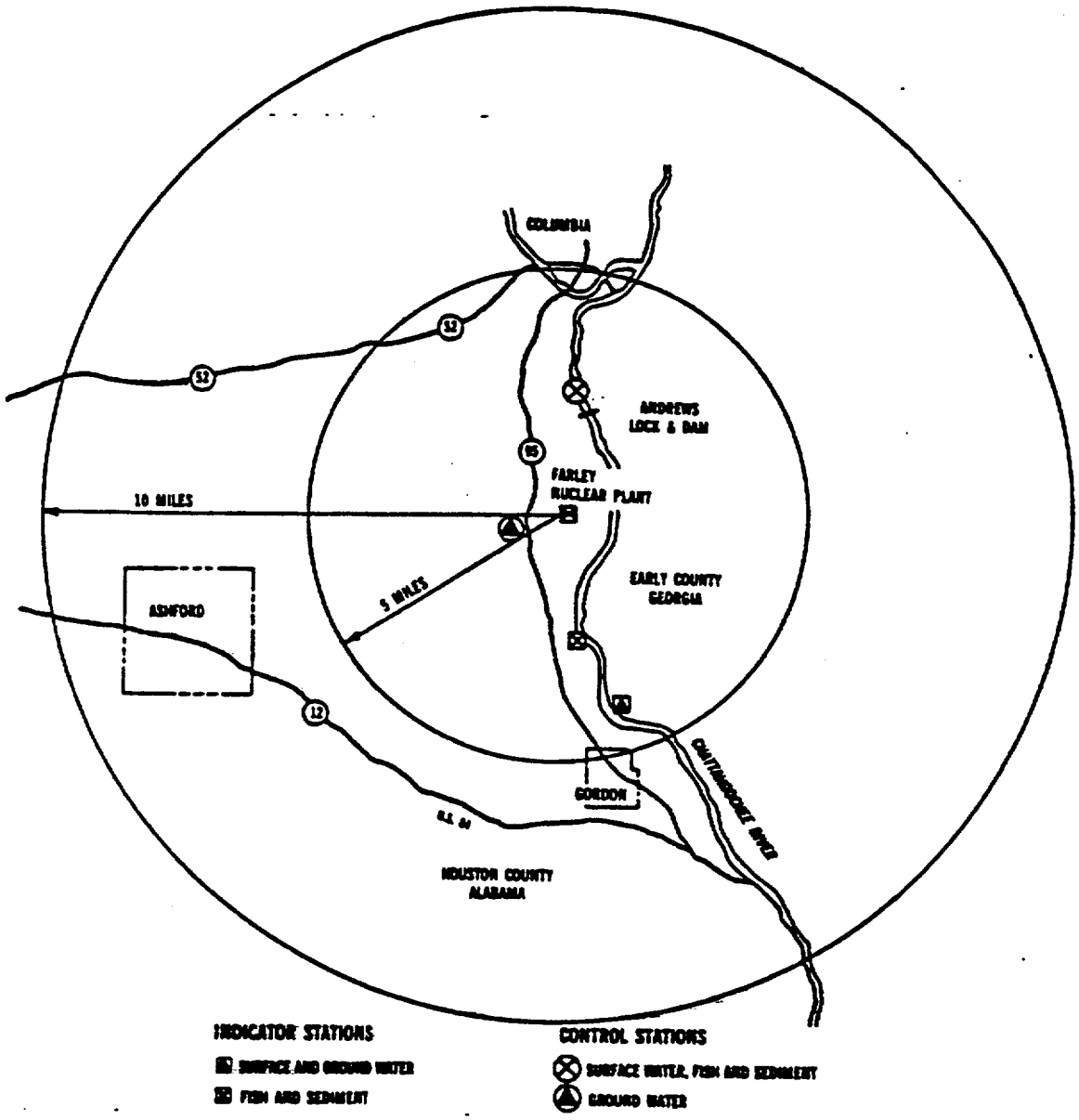

Figure 4-4. Water Sampling Locations