DRAWING TITLE	DWG #	SH #
24" Globe Body Main Steam Isolation Valve - with Cylinder Operator	AM 20451-H	1 THRU 3
Post Accident Sampling	*BR M0012	1
Flow Diagram - Augmented Off-Gas System	*BR M608	1 & 2
Flow Diagram - HVAC New Radwaste Bldg., Heating Boiler, Augmented Offgas	*BR M611	1 THRU 3
Flow Diagram - Main, Extraction & Reheat Steam Systems -.	*BR 2002	1 THRU 4
Flow Diagram - Feedwater & Condensate System	*BR 2003	1
Flow Diagram - Demineralized & Condensate Water Transfer System	*BR 2004	1 & 2
Flow Diagram - Vacuum Priming, Reactor & Turbine Bldg., New Radwaste, Emergency, Screen Wash, Circulating, Service Water Systems	*BR 2005	1 THRU 6
Flow Diagram - Closed Cooling Water System, Reactor Bldg., Turbine Bldg., Radwaste, Augmented Offgas	*BR 2006	1 THRU 8
Flow Diagram - Heater Drain Vent & Pressure Relief System	*BR 2007	1 THRU 4
Flow Diagram - Air Extraction & Offgas Systems	*BR 2008	1 & 2
Flow Diagram - H&V Turbine Bldg., Main Stack, Machine Shop, & Storage Bldg.	*BR 2009	1 THRU 3
Flow Diagram - HVAC Office Bldg.(South End, 480V Swg. Rm.), Control Rm. & Cable Spreading Room, Battery Rm. M.G. Set Rm. Ventilation, Chem Labs	*BR 2010	1 THRU 5
Flow Diagram - Drywell Cooling System, Reactor Bldg. Ventilation	*BR 2011	1 THRU 3
Flow Diagram - H&V Old Radwaste Bldg.	*BR 2012	1
Flow Diagram - Service Air System, Instrument Control, Fluid Details NRW Air System	*BR 2013	1 THRU 10
Flow Diagram - Turbine Oil Lube System	*BR 2014	1
Composite Yard Piping Key Plan	BR 2192	1 & 2
Main One Line Diagram Generators	*BR 3001	1 & 2
Auxiliary One Line Diagram - 460 Unit Substation 1A1 & 1B1, 1A2 & 1B2, 1A3 & 1B3, 1E1	*BR 3002	1 THRU 4
AC Vital One Line Diagram MCC 1A2, 1B2, 1AB2	*BR 3013	1 & 2
DC One Line Diagram - Battery Charger & MCC DC-1, Center A & B	*BR 3028	1 & 2
Intake & Turbine Area Excavation & Backfill Plan & Sections	BR 4006	1
DC One Line Diagram - Battery C & MCC DC-2	*EB D 3033	N/A
Flow Diagram - Recirculation Pumps & M/G Set	*GE 107C5339	1
Flow Diagram - Emergency Condenser System	*GE 148F262	1
Flow Diagram -Liquid, Solid & Obsolete Solid Radwaste Collection & Processing	*GE 148F437	1 THRU 18
Flow Diagram - Cleanup Demineralizer System	*GE 148F444	1
Flow Diagram - Reactor Shutdown Cooling System	*GE 148F711	1
Flow Diagram Liquid Poison System	*GE 148F723	1

- * DENOTES CONTROL ROOM DRAWING

DRAWING TITLE	DWG #	SH #
Flow Diagram - Containment Spray System	*GE 148F740	1
Flow Diagram - Hydraulic Control Rod Drive, Scram Discharge Volume, Nitrogen Charging Systems	*GE 197E871	1
Flow Diagram - Generator Strator Cooling System	*GE 234R166	1
Flow Diagram - Control Rod Drive System	*GE 237E487	1
Fuel Storage Pool Arrangement Plan & Section A-A, Wall Mount Detail, Storage Vault & Gate Lugs, Rack Hold Bolt Pattem	GE 237E516	1 THRU 4
Elementary Diagram - Reactor Protection System	*GE 237E566	1 THRU 20
Flow Diagran - Drywell and Suppression System	*GE 237E726	1
Flow Diagram - Spent Fuel Pool Cooling	*GE 237E756	1
Flow Diagram - Recirculation System	*GE 237E798	1
Elementary Diagram Containment Spray	*GE 237E901	1 & 2
Elementary Diagram - Reactor Manual Control System	*GE 237E912	1 THRU 8
Arrangement Drywell Equipment	*GE 706E206	1 THRU 3
Elementary Diagram Core Spray System	GE 718E644	2
Elementary Diagram for Auto Depressurization System	*GE 729E182	1 THRU 5
Plant Heat Balance	GE 798D807	1
Heat Balance - 3 Heaters 670 Mw	GE 846D640	1
Process Radiation Monitor System	*GE 846D686	1 & 2
Flow Diagram - Core Spray System	*GE 885D781	1
Symbols & Legend for ISD and Isometric Drawings	GF JCP-19431	N/A
ISFSI Spent Fuel Cask Safe Load Path, El. 119' - 3 "	GU 3C-SKS-110	N/A
General Arrangement - Floor & Equipment Drains - Turbine Building	*GU 3D-151-07-001	1 & 2
General Arrangement - Floor & Equipment Drains Reactor Building	*GU 3D-153-07-001	1 & 2
General Arrangement - Floor & Equipment Drains - Old Radwaste Building	*GU 3D-154-07-001	N/A
General Arrangement - Floor & Equipment Drains - New Radwaste Building	*GU 3D-155-07-001	N/A
General Arrangement - Roof Drains & Overboard Discharge System.	*GU 3D-576-07-001	N/A
General Arrangement- Turbine Bldg. Plan Floor Elevation 0'0" & 3'6"	GU 3E-151-02-001	N/A
General Arrangement- Turbine Bldg. Plan 23'6" Floor Elevation	GU 3E-151-02-003	N/A
General Arrangement: Turbine Bldg. Plan 46'6" Floor Elevation	GU 3E-151-02-005	N/A
General Arrangement: Turbine Bldg. Plan 46'6" Floor Elevation	GU 3E-151-02-006	N/A
General Arrangement: Turbine Bldg. Sections	GU 3E-151-02-007	N/A
General Arrangement: Turbine Bldg. Plan Partial Plans & Sections	GU 3E-151-02-008	N/A
General Arrangement: Turbine Bldg. Plan Partial Plans & Sections	GU 3E-151-02-009	N/A
General Arrangement: RB Plan Floor Elevation (-)19'6"	GU 3E-153-02-001	N/A
General Arrangement: RB Plan Floor Elevation 23'6"	GU 3E-153-02-002	N/A
General Arrangement: RB Plan Floor Elevation 51'3"	GU 3E-153-02-003	N/A
General Arrangement: RB Plan Floor Elevation 75'3"	GU 3E-153-02-004	N/A

*** * DENOTES CONTROL ROOM DRAWING**

DRAWING TITLE	DWG #	SH #
General Arrangement: PB Plan Floor Elevation 95'3"	GU 3E-153-02-005	N/A
General Arrangement: RB Plan Floor Elevation 119'3"	GU 3E-153-02-006	N/A
General Arrangement: RB Section A-A	GU 3E-153-02-007	N/A
General Arrangement RB Section B-B	GU 3E-153-02-008	N/A
General Arrangement: RB Section C-C, D-D & E-E	GU 3E-153-02-009	N/A
General Arrangement: Old Radwaste Bldg. Plan	GU 3E-154-02-001	N/A
General Arrangement: Old Radwaste Bldg. Roof Plan	GU 3E-154-02-002	N/A
General Arrangement: Old Radwaste Bldg. Sections	GU 3E-154-02-003	N/A
General Arrangement: New Radwaste Bldg. Floor El. 23'6"	GU-3E-155-02-001	N/A
General Arrangement: New Radwaste Bldg. Floor El. 33'0", 35'6", 38'6"	GU 3E-155-02-002	N/A
General Arrangement- New Radwaste Bldg. Floor El. 48'0"	GU 3E-155-02-003	N/A
General Arrangement: New Radwaste Bldg. Sections A-A, B-B & F-F	GU 3E-155-02-004	N/A
General Arrangement-. New Radwaste Bldg. Section C-C, D-D, & E-E	GU 3E-155-02-005	N/A
General Arrangement-. Office Bldg. Plan 23'6" - 35'0" Floor Elevation	GU 3E-156-02-001	N/A
General Arrangement- Office Bldg. Plan 46'6" & Roof Plan Floor Elevation	GU 3E-156-02-002	N/A
General Arrangement Diesel Generator Building Plans El. 23'0" & 37'0"	GU 3E-157-02-001	N/A
General Arrangement Heating Boiler House Plan El. 23'6" & Sections	GU 3E-158-02-001	N/A
General Arrangement Maintenance Building Plan El. 24'6"	GU 3E-162-02-001	N/A
General Arrangement Maintenance Building Plan El. 38'6"	GU 3E-162-02-002	N/A
General Arrangement Maintenance Building Roof Plan	GU 3E-162-02-003	N/A
General Arrangement Pretreatment Bldg. Plan El. 23'6" & Sections	GU 3E-167-02-001	N/A
General Arrangement Intake Structure Plan & Sections	GU 3E-168-02-001	N/A
General Arrangement Chlorination Facilities Plan El. 23'6" & Sections	GU 3E-169-02-001	N/A
General Arrangement Dilution Pumphouse Plan El. 6'0", 11'6" & Sections	GU 3E-170-02-001	N/A
General Arrangement Augmented Offgas Building Plans El. 23'6", El. 38'9"	GU 3E-175-02-001	N/A
General Arrangement Augmented Offgas Building Plans A-A, B-B, & C-C	GU 3E-175-02-002	N/A
General Arrangement Fresh Water Pumphouse & Redundant Fire Protection Pumphouse Plan & Sections	GU 3E-176-02-001	N/A
General Arrangement New Sample Pumphouse Plan & Section A-A	GU 3E-185-02-001	N/A
General Arrangement Machine Shop Plans El. 23'6", 34'6" & Roof	GU 3E-186-02-001	N/A
Emergency Condenser - ISI Boundary Drawing	GU 3E-211-A1-001	N/A
Core Spray System - ISI Boundary Drawing	GU 3E-212-A1-001	1
Liquid Poison System - ISI Boundary Drawing	GU 3E-213-A1-001	1
Recirculation System - ISI Boundary Drawing	GU 3E-223-A1-001	1
Scram Discharge Volume System, Control Rod Drive Hydraulic System & Nitrogen Charging System - ISI Boundary Drawing	GU 3E-225-A1-001	1

* * **DENOTES CONTROL ROOM DRAWING**

DRAWING TITLE	DWG #	SH #
Control Rod Drive (CRD) & Reactor Head Cooling - ISI Boundary Drawing	GU 3E-225-A1-002	1
Containment Spray System - ISI Boundary Drawing	GU 3E-241-A1-001	1
Drywell & Torus Vacuum Relief System - ISI Boundary Drawing	GU 3E-243-A1-001	1
Spent Fuel Pool Cooling System - ISI Boundary Drawing	GU 3E-251-A1-001	1
Main Steam System - ISI Boundary Drawing	GU 3E-411-A1-001	1 & 2
Condensate Transfer System - ISI Boundary Drawing	GU 3E-424-A1-001	1
Emergency Service Water - ISI Boundary Drawing	GU 3E-532-A1-001	1
Reactor Bldg. Closed Cooling Water System - ISI Boundary Drawing	GU 3E-541-A1-001	1 THRU 4
Flow Diagram - Radiation Monitoring System RAGEMS- I Stack	*GU 3E-661-21-1000	1
Emergency Power System On Line Diagram	*GU 3E-743-11-001	N/A
Flow Diagram - Standby Gas Treatment	*GU 3E-822-21-1000	1
Flow Diagram - Diesel Generator Fuel Oil Storage & Transfer System	*GU 3E-862-21-1000	1
Flow Diagram - Domestic Water & Pretreatment System	*GU 3E-871-21-1000	1 THRU 3
Radwaste Cask FSV-1 Safe Load Path RB Plan Floor Elevation 119'3"	GU 3E-882-06-001	N/A
Radwaste Cask VNDB 355 Safe Load Path RB Plan Floor Elevation 119'3"	GU 3E-882-06-002	N/A
Flow Diagram - Fire Protection Water System	*JC 19479	1 THRU 4
Site Plan	*JC 19702	1
Core Spray/RBCCW Drywell Isolation System Elementary	*NU 5060E6003	1 THRU 5
North Yard Domestic & Potable Water System	SN 15050-110-PID-050	N/A

* DENOTES CONTROL ROOM DRAWING

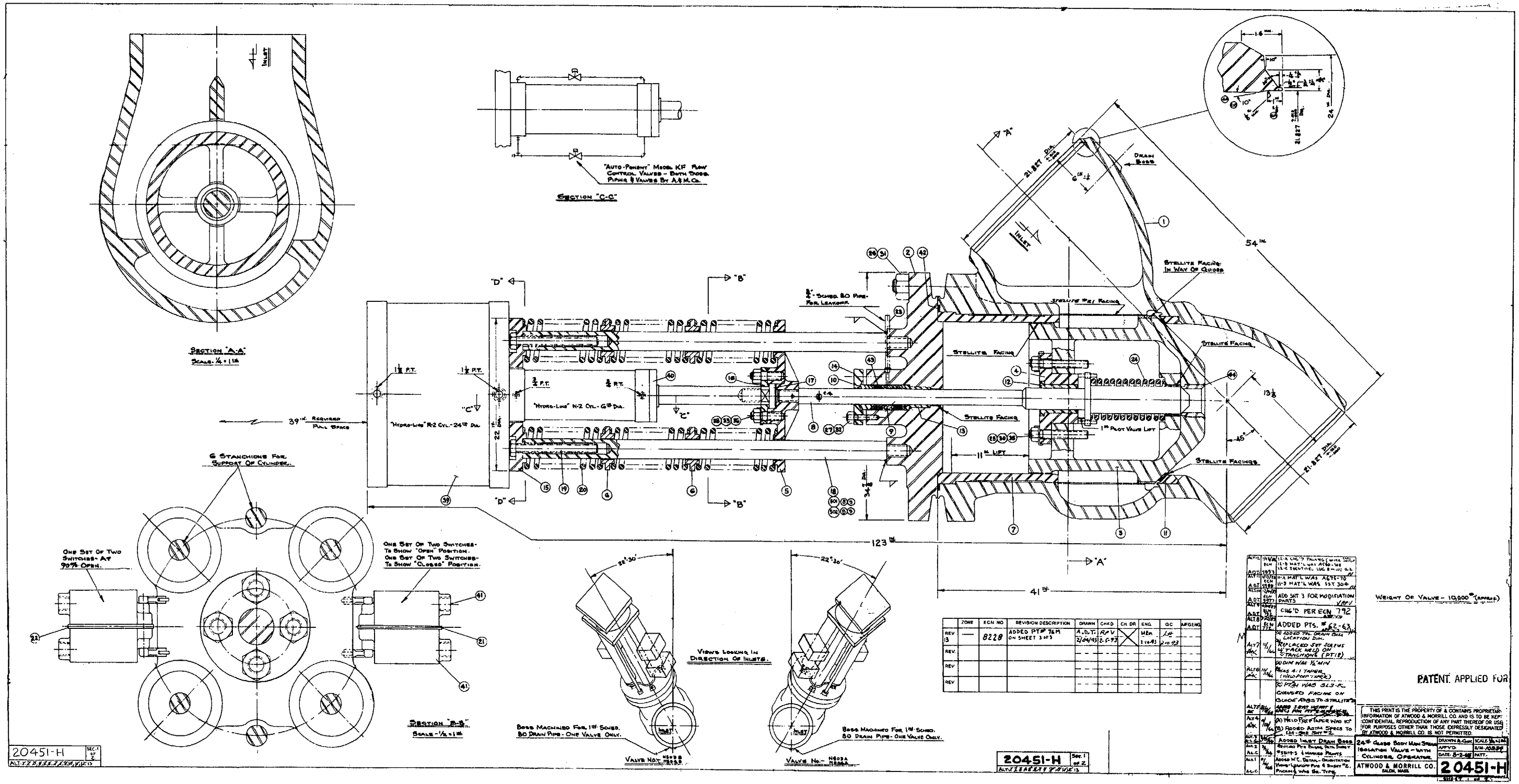

	ZONE	ECN NO.	REVISION DESCRIPTION	DRAWN	CHKD	CH DR	ENG.	QC	APPD/EMD
REV B	—	8228	ADDED PT # 76M ON SHEET 3 of 3	A.D.T. 2/24/93	RVV 2-17-93	X	MEM 3/16/93	JH 3/10/93	
REV.									
REV									
REV									

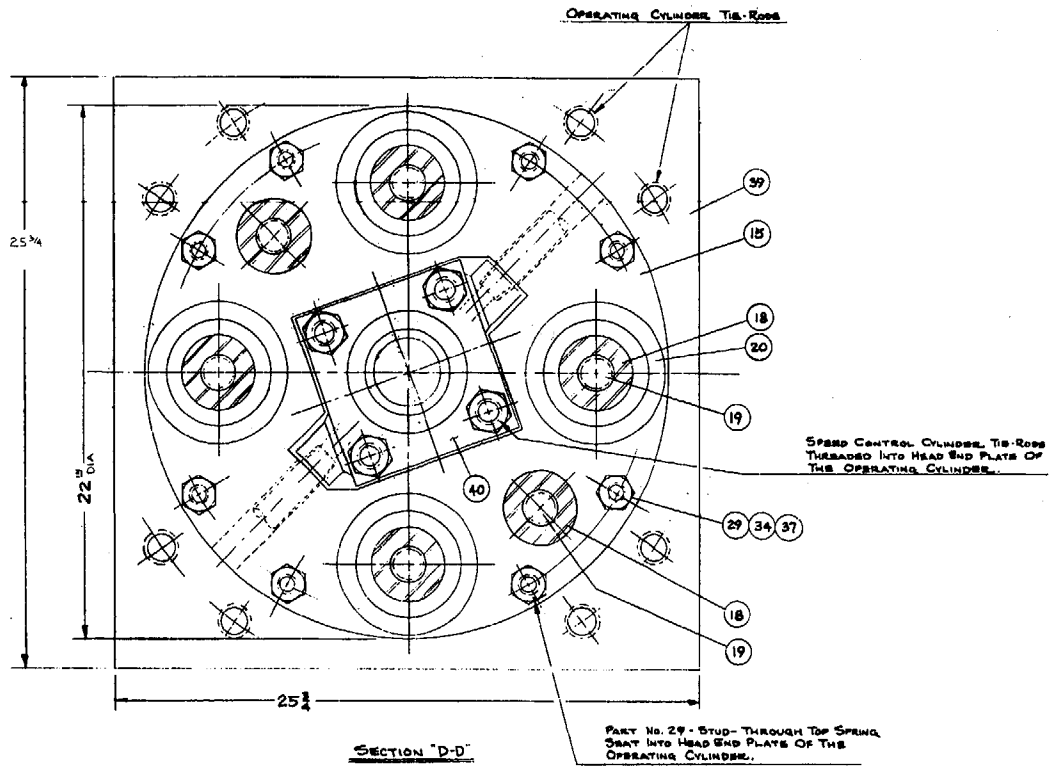

SECTION "D-D"

* CENTRIFUGALLY CAST

LIST OF MATERIAL

NO.	NAME OF PART	MATERIAL
1	BODY	CAST STEEL ASTM A216 WCB
2	COVER	CAST STEEL ASTM A216 WCB
3	PUPPET	CAST STEEL ASTM A216 WCB
4	POPPET CAP	CAST STEEL ASTM A216 WCB
5	BOTTOM SPRING SEAT	CAST STEEL ASTM A216 WCB
6	SPRING SPACER	CAST IRON ASTM A126 CLB
* 7	BODY LINER	ST. ST. 440C
(5) 8	VALVE STEM	ST. ST. ASTM A564 630
9	LANTERN GLAND	ST. ST. ASTM A276 416
10	GLAND	ST. ST. ASTM A276 416
11	BODY RING	STEEL ASTM A285 GRC
12	POPPET CAP BUSHING	STELLITE #6
13	COVER BUSHING	STELLITE #6
14	GLAND PLATE	STEEL ASTM A285 GRC
15	TOP SPRING SEAT	STEEL ASTM A7
~~16~~	~~BOTTOM SPRING SEAT~~	~~STEEL ASTM A7~~
17	PISTON ROD END	STEEL ASTM A331 GR 4140
(5) 18	YOKE RODS	STEEL ASTM GR 4140
19	PULL-DOWN BOLTS	STEEL ASTM A331 GR 4140
20	SPRINGS	STEEL 1095
21	SWITCH BRACKET	STEEL ASTM A7
22	SWITCH BRACKET	STEEL ASTM A7
23	LEAKOFF PIPE	STEEL ASTM 106 GR B
24	INTERNAL SPRING	INCONEL - X
25	STUDS - POPPET	STEEL - ASTM A193-B8C (80 ROCK B MIN)
(5) 26	STUDS - COVER	STEEL - ASTM A193 - B16
27	STUDS - GLAND	STEEL ASTM A193 - B7
28	STUDS - BOTTOM SPRING SEAT	STEEL ASTM A193 - B7
29	STUDS - TOP SPRING SEAT	STEEL - ASTM A193 - B7
30	HEX. NUTS - POPPET	STEEL - ASTM A194 GR 8C (80 ROCK B MIN)
(5) 31	HEX. NUTS - COVER	STEEL - ASTM A194 - 7
32	HEX. NUTS - GLAND	STEEL - ASTM A194 - 2H
33	HEX. NUTS - BOTTOM SPRING SEAT	STEEL - ASTM A194 - 2H
34	HEX. NUTS - TOP SPRING SEAT	STEEL - ASTM A194 - 2H
36	LOCKING PLATES - POPPET CAP	INCONEL 600
36	LOCKING PLATES - BOT. SPRING SEAT	STEEL ASTM A7
37	LOCK WASHERS - TOP SPRING SEAT	STEEL COM'L
38		
39	(OPERATING CYLINDER	"HYDROLINE" #R2KX
40	(SPEED CONTROL CYLINDER	"HYDROLINE" #N2K
41	INDICATING SWITCHES	"NATIONAL ACME" #SLB C55W
42	GASKET	"FLEXITALLIC" (GST-304 & ABS)
43	PACKING	G-P - - 201-900
(5) 44	SEAT INSERT	STEEL A105
(5)(5) 501	BUSHING	STEEL 1117
(5)(5) 502	KEY	STEEL 1095

	ZONE	ECN NO	REVISION DESCRIPTION	DRAWN	CHKD	CH DR	ENG	QC	MFG ENG
REV. 13	—	0228	SEE SHEET 1-3	A.D.T. 2/24/93	RPV 2-5-93		HEM 2-26-93	LK J.W.P.	
REV. 14									
REV. 15									
REV. 16									

ALT. 11	11/20/89 ADT	SEE SHEET 1
ALT. 10	11/20/89 ADT	SEE SHEET 1
ALT. 10	12/01/89 ADT	SEE SHEET 1
ALT. 9	4/20/89 ADT	SEE SHEET 1 APPV'D
ALT. 8	1/31/89 ADT	SEE SHEET 1
ALT. 7	11/16/88 ADT	REVISED DETAIL (SEE SHEET 2) SEE ALSO UNIT 1
ALT. 6	11/16/88 ADT	CHGD WELD PREP TABLE (UNIT 1)
ALT. 5	11/16/88 ADT	(2) PT NO. WAS 3L9-B2. CHANGED MATERIAL ON BODY, BUSHINGS TO STELLITE #21 ADDED SEAT-INSERT & SPECIAL PKG NO. - 2-G-17-42-1330-30
ALT. 4	4/19/88 ADT	(A) ADDED ASTM SPECS. BY NOT 8-15/14-23 AND 3L9-(SHT 2) (B) CHANGED WELD PREP TAPER. (SHT 1)
ALT. 3	3/16/88 ADT	ADDED DRLG. BOSS - SHEET 1
ALT. 2	3/16/88 ADT	REVISED PER ENGRG. DATA SHEET 2-28117-2 & HANGER MOUNTS
ALT. 1	11/18/87 ADT	ADDED NEW DETAIL - ON SHEET 1 - 01 VIEWS - CHANGED 1" DIA TO 1 3/8" - 2. PACKING WAS SQ. TYPE

SEE SHEET 1

PATENT APPLIED FOR

THIS PRINT IS THE PROPERTY OF & CONTAINS PROPRIETARY INFORMATION OF ATWOOD & MORRILL CO. AND IS TO BE KEPT CONFIDENTIAL. REPRODUCTION OF ANY PART THEREOF OR USE FOR PURPOSES OTHER THAN THOSE EXPRESSLY DESIGNATED BY ATWOOD & MORRILL CO. IS NOT PERMITTED.

24" Globe Main Steam Isolation Valve With Cylinder Operator

ATWOOD & MORRILL CO. SALEM, MASS.

DRAWN A. Cook | SCALE 1/4"=1"
APPV'D. | B/M 48924
DATE 11-10-88 | PATT.

20451-H

SHEET 1 OF 3

20451-H SCH. 40 E

ALT. 1 2 3 4 5 6 7 8 9 10 11 12 13

20451-H SCH. 40 E

REV. 1 2 3 4 5 6 7 8 9 10 11 12 13

PARTS LIST

CHECK SYM	LINE NO.	NAME	REQ'D BY	QTY.	DWG	MATL.	SPEC.	GRADE	NOTES
*	3-M	POPPET				STL FRGD	SA 105		
	4-M	POPPET CAP				STL PLT	A515	70	
*	5-M	BOTT. SPG PLATE				STL PLT	A515	70	
*	8-M 001	STEM				SST	A564	630	HT 1100
*	8-M 002	SPG HOLDER NUT				SST	A276	304	
	8-M 003	PIN				SST	A276	410	
*	8-M 004	PILOT POPPET NUT				SST	A582	416	
	8-M 005	SET SCREW				ALY STL			
	8-M 006	SPLIT RING				SST	A564	630	HT 1100
*	8-M 007	PILOT POPPET				SST	SA 182	316	
	9-M	LANTERN GLAND				SST	A582	416	
	10-M	GLAND				SST	A582	416	
*	13-M	COVER BUSHING				CO CR W	STELLITE	#6	
*	16-M	DASH POT SEAT PLATE				STL	A515	70	
	24-M	INTERNAL SPRING				NI-CR-FE	INCONEL	X-750	
	25-M	BOLT				ALY STL	A193	B-7	

* SAFETY RELATED PARTS

PARTS LIST

CHECK SYM	LINE NO.	NAME	REQ'D BY	QTY.	DWG	MATL.	SPEC.	GRADE	NOTES
*	33-M	STUD				STL	A193	B7	
*	33-M	NUT, HVY HEX				STL	A194	2H	
	36-M	LOCKING PLATE				SST	A240	304	
	42-M	GASKET				SST MA	FLEXITALIC	304	
	43-M	PACKING				CHESTERTON	STYLE 5300	GTP1	
	63-M	WIPER RING				CHESTERTON	STYLE L	CL	
	64-M	HEX SOCKET SET SCR				ALY STL			
*	65-M	SPRING RET RING				STL PLT	A515	70	
	66-M	JAM NUT				STL	A194	2H	
	67-M	STUD				ALY STL	A193	B7	
	68-M	POPPET PLATE				STL PLT	A515	70	
	69-M	KEY				SST	A564	630	
*	70-M	STEM CONNECTOR				STL PLT	A515	70	
	~~71-M~~	~~KEY KEEPER~~				STL	A276	304	
	72-M	LOCK DOWEL				SST	A276	304	
	73-M	SET SCR HEX SOC				SST		18-8	

PARTS LIST

CHECK SYM	LINE NO.	NAME	REQ'D BY	QTY.	DWG	MATL.	SPEC.	GRADE	NOTES
	74-M	BOLT				ALY STL	A193	B7	
	75-M	CAP SCR HEX				SST		18-8	
	8-M 002	LUG				SST	A276	304	
	76-M	LOCKING PLATE				SST	A240	304	

	ZONE	ECN NO	REVISION DESCRIPTION	DRAWN	CHKD.		ENG	Q.C.	MFG.
REV 10	—	5977	SEE SHEET 1	A.D.T. 12/10/87	RPV 12-2-87		RCL 12-7-87	JMCR 12-7-87	
REV 11	—	5988	SEE SHEET 1	A.D.T. 1/13/88	RPV 1-13-88		RCL	RDS 1/13/88	
REV 12	—	5993	SEE SHEET 1	A.D.T. 1/28/88	RPV 1-28-88		RCM	RDS 1-28-88	
REV 13	—	8228	SEE SHEET 1	A.D.T. 2/24/93	RPV 2-5-93		RCM 2-24-93	LK 2-24-93	

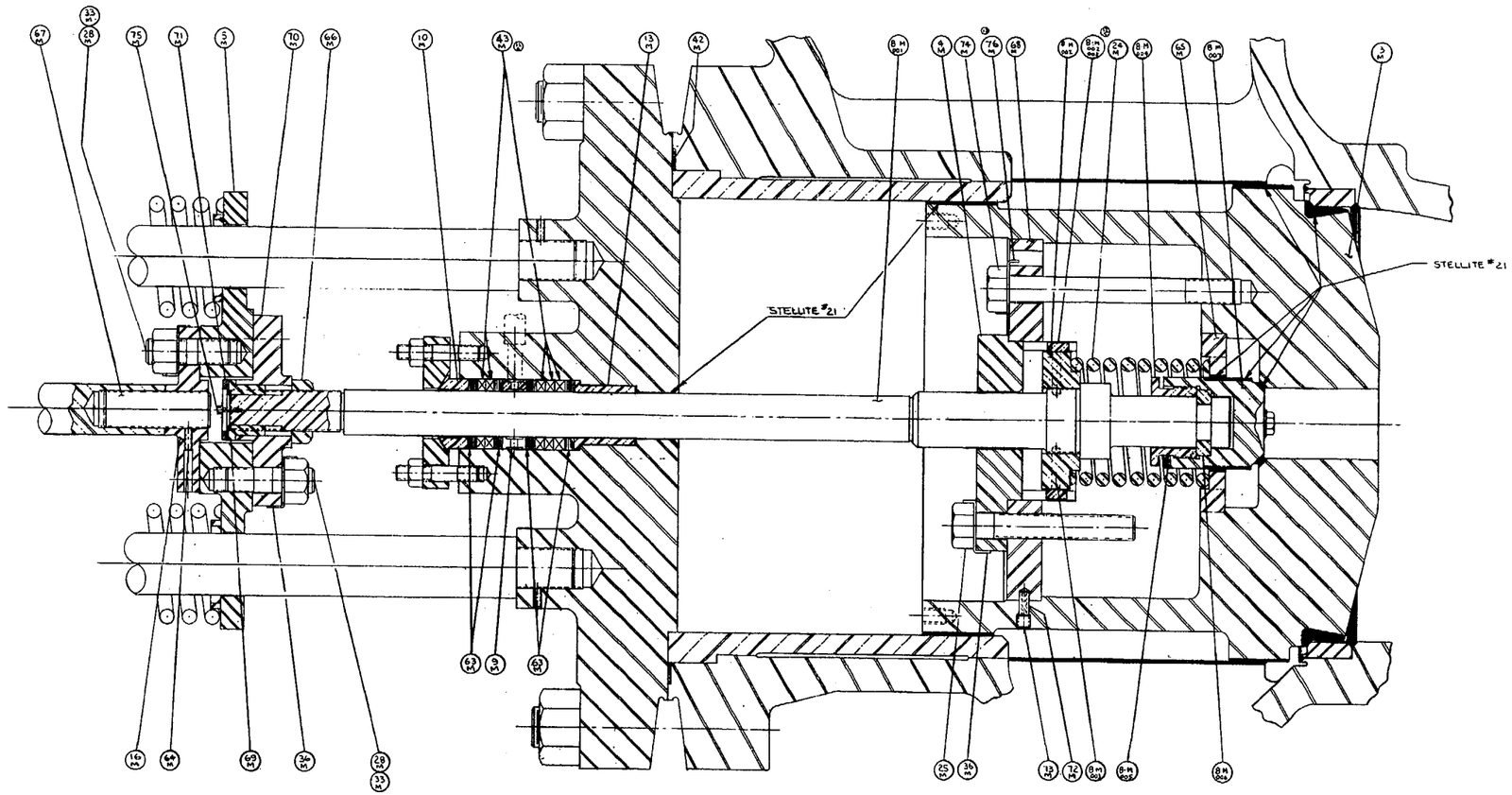

CUSTOMER: G.P.U. NUCLEAR
PROJECT : OYSTER CREEK NUCLEAR STATION

THIS PRINT CERTIFIED CORRECT FOR YOUR ORDER
OP057104

WHEN WRITING IN REGARD TO THIS EQUIPMENT REFER TO
30211

THIS PRINT IS THE PROPERTY OF & CONTAINS PROPRIETARY INFORMATION OF ATWOOD & MORRILL CO., INC. AND IS TO BE KEPT CONFIDENTIAL. REPRODUCTION OF ANY PART THEREOF OR USE FOR PURPOSES OTHER THAN THOSE EXPRESSLY DESIGNATED BY ATWOOD & MORRILL CO., INC. IS NOT PERMITTED.

SCALE —
WT. —
REF.
DATE 10-23-86 S.V.S.
APPD. 4/5

TOLERANCE IN INCHES UNLESS OTHERWISE SPECIFIED
FRACTIONAL DIMENSIONS ±1/32
ANGULAR DIMENSIONS ±1/2°
SURFACE FINISHES 125
ALL CORNERS 1/32 R OR CHAM. UNLESS OTHERWISE SPECIFIED.

24" GLOBE BODY H.S.I.V. W/OIL OPERATOR MODIFICATION FOR OYSTER CREEK

ATWOOD & MORRILL CO., INC.
SALEM MASS.

SHEET 3 OF 3

20451-H

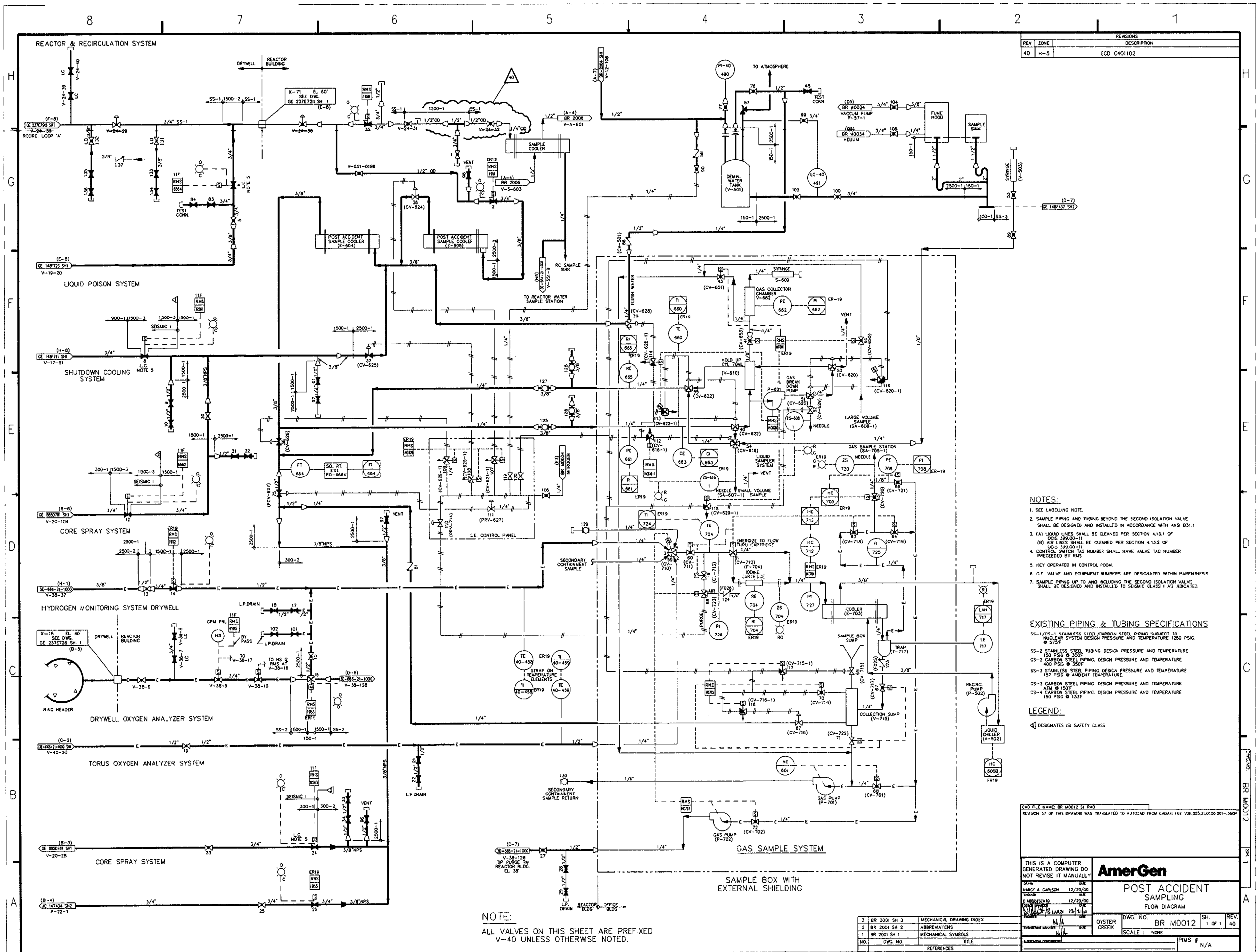

NOTES:

1. SEE LABELING NOTE.
2. SAMPLE PIPING AND TUBING BEYOND THE SECOND ISOLATION VALVE SHALL BE DESIGNED AND INSTALLED IN ACCORDANCE WITH ANSI B31.1
3. (A) LIQUID LINES SHALL BE CLEANED PER SECTION 4.13.1 OF OCNS 399.00-11
   (B) AIR LINES SHALL BE CLEANED PER SECTION 4.13.2 OF OCNS 399.00-11
4. CONTROL SWITCH TAG NUMBER SHALL HAVE VALVE TAG NUMBER PRECEDED BY RHS.
5. KEY OPERATED IN CONTROL ROOM.
6. CLE VALVE AND EQUIPMENT NUMBERS ARE DESIGNATED WITHIN PARENTHESIS
7. SAMPLE PIPING UP TO AND INCLUDING THE SECOND ISOLATION VALVE SHALL BE DESIGNED AND INSTALLED TO SEISMIC CLASS I AS INDICATED.

EXISTING PIPING & TUBING SPECIFICATIONS

SS-1/CS-1 STAINLESS STEEL/CARBON STEEL PIPING SUBJECT TO NUCLEAR SYSTEM DESIGN PRESSURE AND TEMPERATURE 1250 PSIG @ 575F

SS-2 STAINLESS STEEL TUBING DESIGN PRESSURE AND TEMPERATURE 150 PSIG @ 300F

CS-2 CARBON STEEL PIPING DESIGN PRESSURE AND TEMPERATURE 400 PSIG @ 350F

SS-3 STAINLESS STEEL PIPING DESIGN PRESSURE AND TEMPERATURE 157 PSIG @ AMBIENT TEMPERATURE

CS-3 CARBON STEEL PIPING DESIGN PRESSURE AND TEMPERATURE ATM @ 150F

CS-4 CARBON STEEL PIPING DESIGN PRESSURE AND TEMPERATURE 150 PSIG @ 132F

LEGEND:

◁ DESIGNATES IS SAFETY CLASS

NOTE:

ALL VALVES ON THIS SHEET ARE PREFIXED V-40 UNLESS OTHERWISE NOTED.

NO.	DWG. NO.	TITLE
3	BR 2001 SH 3	MECHANICAL DRAWING INDEX
2	BR 2001 SH 2	ABBREVIATIONS
1	BR 2001 SH 1	MECHANICAL SYMBOLS

REFERENCES

CAD FILE NAME: BR M0012 S1 R40

REVISION 37 OF THIS DRAWING WAS TRANSLATED TO AUTOCAD FROM CADAM FILE V3E.555.21.0100.001-.360P

THIS IS A COMPUTER GENERATED DRAWING DO NOT REVISE IT MANUALLY

DRAWN NANCY A. CARLSON 12/20/00
CHECKED D. BERDECCAID 12/20/00
DESIGN APPROVED R. ULRICH 12/21/00
ENGINEERING REVIEW N/A
ENGINEERING CONCURRENCE N/A

AmerGen

POST ACCIDENT SAMPLING
FLOW DIAGRAM

OYSTER CREEK | DWG. NO. BR M0012 | SH. 1 OF 1 | REV. 40
SCALE : NONE
PIMS # N/A

BR M0012 SH. 1

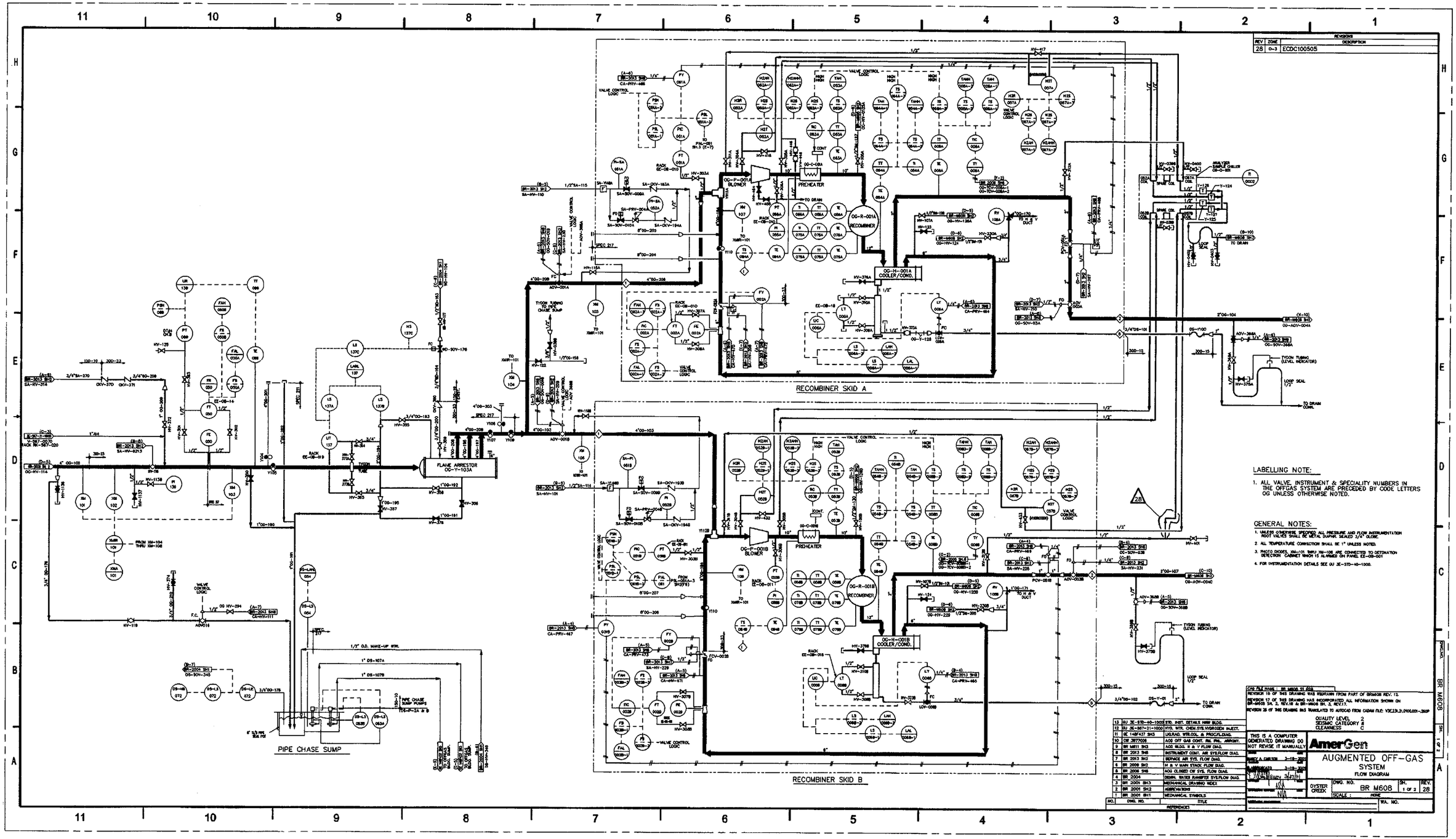
RECOMBINER SKID A
RECOMBINER SKID B
PIPE CHASE SUMP
FLAME ARRESTOR OG-Y-103A
OG-P-001A BLOWER
OG-P-001B BLOWER
PREHEATER
OG-R-001A RECOMBINER
OG-R-001B RECOMBINER
OG-H-001A COOLER/COND.
OG-H-001B COOLER/COND.
TYCON TUBING (LEVEL INDICATOR)
LOOP SEAL 1/2"
TO DRAIN COND.
TO DRAIN
TO H & V DUCT
LABELLING NOTE:
1. ALL VALVE, INSTRUMENT & SPECIALITY NUMBERS IN THE OFFGAS SYSTEM ARE PRECEDED BY CODE LETTERS OG UNLESS OTHERWISE NOTED.
GENERAL NOTES:
1. UNLESS OTHERWISE SPECIFIED ALL PRESSURE AND FLOW INSTRUMENTATION ROOT VALVES SHALL BE METAL DIAPHR. SEALED 3/4" CLONE.
2. ALL TEMPERATURE CORRECTION SHALL BE 1° UNLESS NOTED.
3. PHOTO DIODES, XM-101, 102, 103 & XM-105 ARE CONNECTED TO DETONATION DETECTION CABINET WHICH IS ALARMED ON PANEL EE-08-001
4. FOR INSTRUMENTATION DETAILS SEE GU 3E-STD-40-1000.
REVISIONS
REV ZONE DESCRIPTION
28 D-3 ECDC100505
QUALITY LEVEL 2
SEISMIC CATEGORY II
CLEANNESS C
THIS IS A COMPUTER GENERATED DRAWING DO NOT REVISE IT MANUALLY
AmerGen
AUGMENTED OFF-GAS SYSTEM
FLOW DIAGRAM
OYSTER CREEK
DWG. NO. BR M608
SH. 1 of 2
REV. 28
SCALE : NONE
WA. NO.
REFERENCES
NO. DWG. NO. TITLE
13 GU 3E-STD-40-1000 STD. INST. DETAILS NRW BLDG.
12 GU 3E-3671-21-1000 RTD. NTR. CHEM SYS HYDROGEN INJECT.
11 GE 148F437 SH3 LIQ.RAD. WTR.COL. & PROFILEAD.
10 CW 3977006 AOG OFF GAS CONT. RIL PNL. ARRGMT.
9 BR M611 SH3 AOG BLDG. N & V FLOW DIAG.
8 BR 2013 SH6 INSTRUMENT CONT. AIR SYS.FLOW DIAG.
7 BR 2013 SH2 SERVICE AIR SYS. FLOW DIAG.
6 BR 2009 SH2 H & V MAIN STACK FLOW DIAG.
5 BR 2006 SH6 AOG CLOSED OF SYS. FLOW DIAG.
4 BR 2004 DRAIN, WATER SUMPTER SYS.FLOW DIAG.
3 BR 2001 SH3 MECHANICAL DRAWING INDEX
2 BR 2001 SH2 ABBREVIATIONS
1 BR 2001 SH1 MECHANICAL SYMBOLS

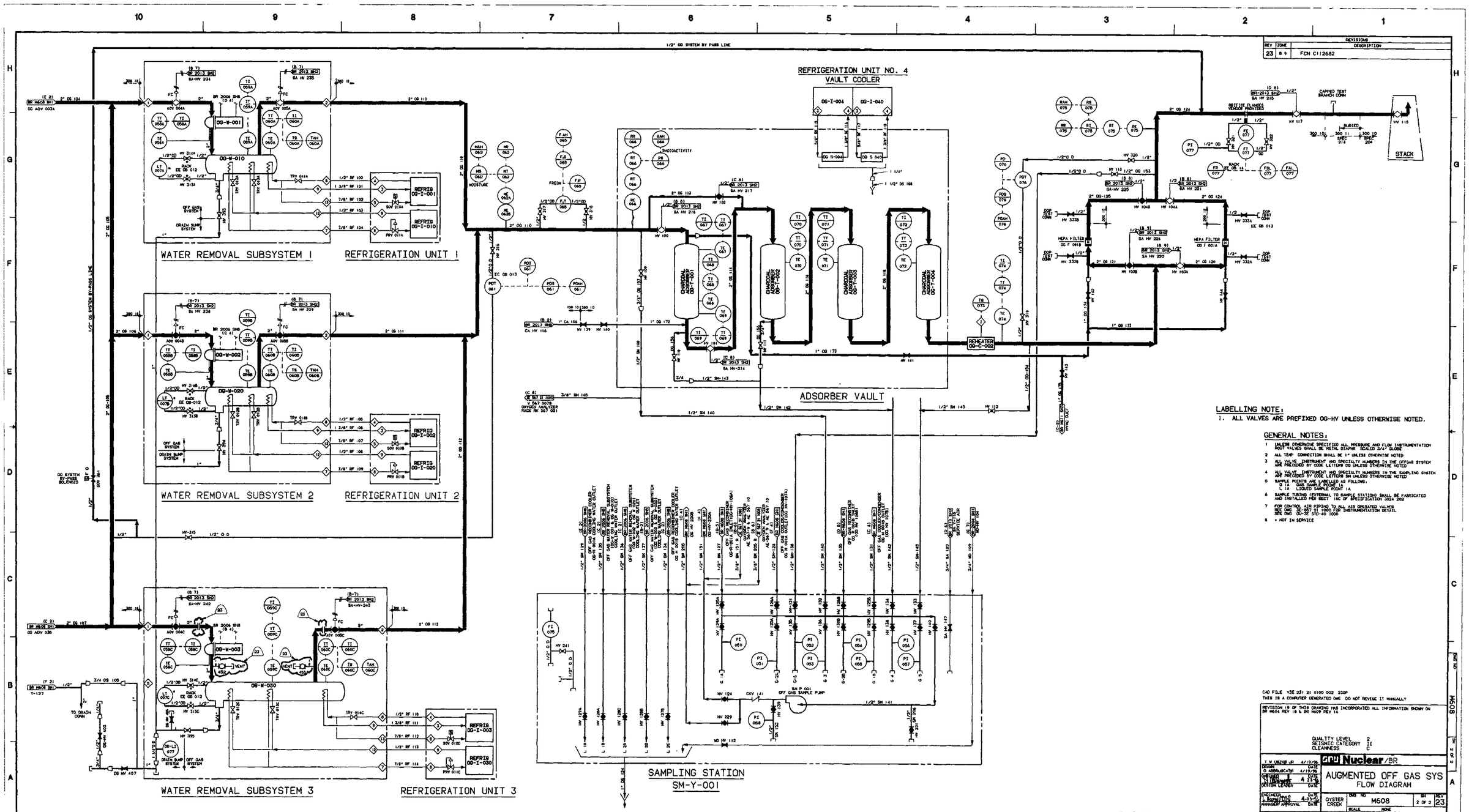

LABELLING NOTE:

1. ALL VALVES ARE PREFIXED OG-HV UNLESS OTHERWISE NOTED.

GENERAL NOTES:

1. UNLESS OTHERWISE SPECIFIED ALL PRESSURE AND FLOW INSTRUMENTATION ROOT VALVES SHALL BE METAL DIAPHR SEALED 3/4" GLOBE
2. ALL TEMP CONNECTION SHALL BE 1" UNLESS OTHERWISE NOTED
3. ALL VALVE INSTRUMENT AND SPECIALTY NUMBERS IN THE OFGAS SYSTEM ARE PRECEDED BY CODE LETTERS OG UNLESS OTHERWISE NOTED
4. ALL VALVE INSTRUMENT AND SPECIALTY NUMBERS IN THE SAMPLING SYSTEM ARE PRECEDED BY CODE LETTERS SM UNLESS OTHERWISE NOTED
5. SAMPLE POINTS ARE LABELLED AS FOLLOWS:
   G 1A GAS SAMPLE POINT 1A
   L 1A LIQUID SAMPLE POINT 1A
6. SAMPLE TUBING (EXTERNAL TO SAMPLE STATION) SHALL BE FABRICATED AND INSTALLED PER SECT 16C OF SPECIFICATION 3024 202
7. PCER CONTROL AIR PIPING TO ALL AIR OPERATED VALVES SEE DWG 3E-857 21 1000 FOR INSTRUMENTATION DETAIL SEE DWG 0U-3E STD-40 1000
8. * NOT IN SERVICE

CAD FILE V3E 23\ 21 0100 002 230P
THIS IS A COMPUTER GENERATED DWG DO NOT REVISE IT MANUALLY

REVISION 19 OF THIS DRAWING HAS INCORPORATED ALL INFORMATION SHOWN ON BR M604 REV 18 & BR M609 REV 14

QUALITY LEVEL 2
SEISMIC CATEGORY II
CLEANNESS C

GPU Nuclear/BR

AUGMENTED OFF GAS SYS
FLOW DIAGRAM

OYSTER CREEK | DWG NO M608 | SH 2 OF 2 | REV 23 | SCALE NONE

REVISIONS		
REV	ZONE	DESCRIPTION
33	C-3	ECD C312244

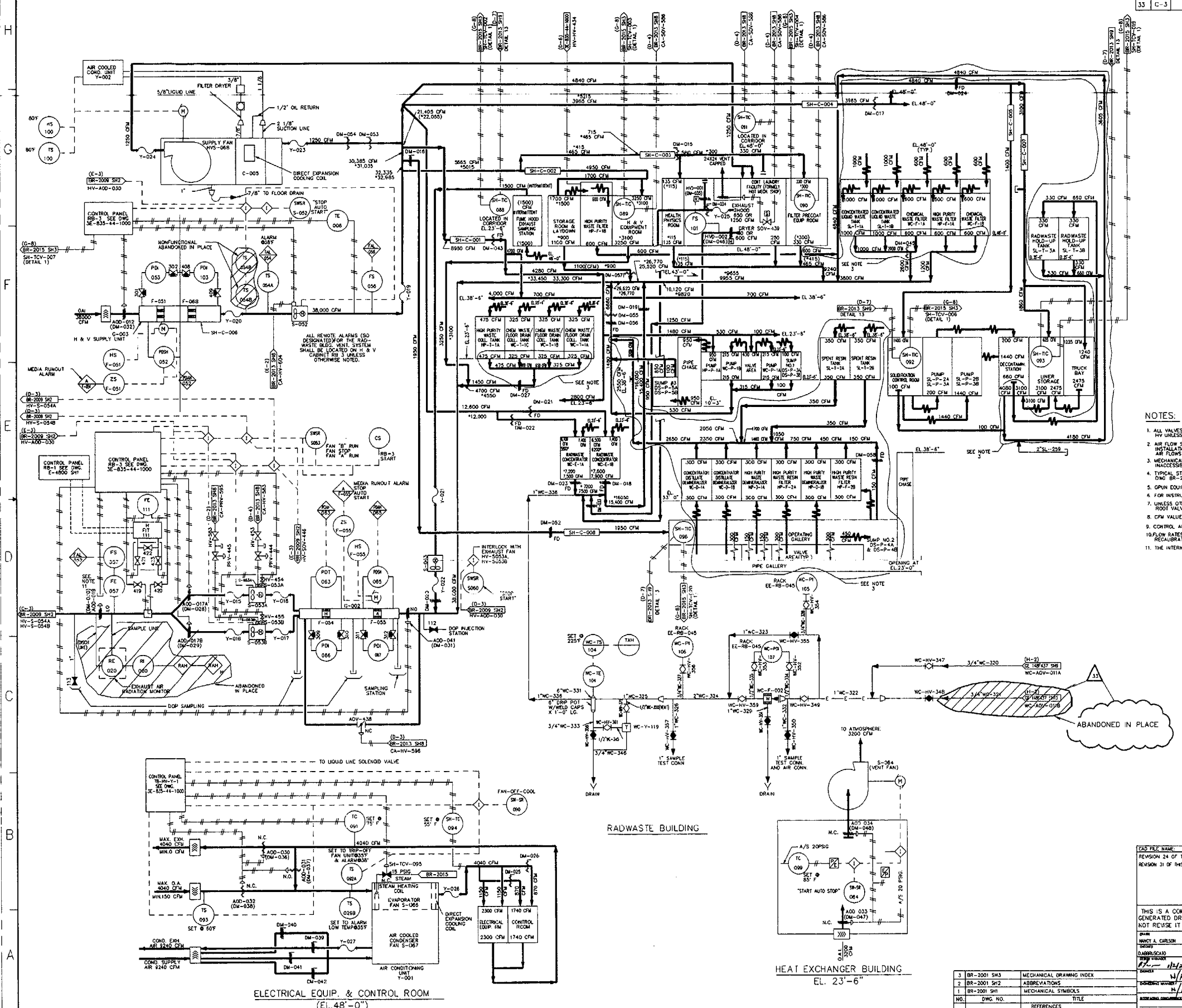

NOTES:

1. ALL VALVES INSTRUMENT & SPECIALTY NUMBERS ARE PREFIXED WITH HV UNLESS OTHERWISE NOTED.
2. AIR FLOW SHOWN WITH * ARE TEMPORARY TO SUPPORT LAUNDRY FACILITY INSTALLATION. THESE TEMPORARY AIR FLOWS ARE TO BE REPLACED WITH AIR FLOWS IN BRACKETS AT TIME OF TOTAL SYSTEM REPLACEMENT.
3. MECHANICAL ITEMS SHOWN CIRCLED HAVE NOT BEEN VERIFIED DUE TO INACCESSIBILITY, HIGH RADIATION OR CONTAMINATION.
4. TYPICAL STEAM HEATING COIL PIPING & VALVING DETAILS SHOWN ON DWG BR-2015 SH3
5. GPUN EQUIPMENT AND SPECIALTY TAG NUMBERS ARE IN PARENTHESIS.
6. FOR INSTRUMENTATION DETAILS SEE DWG GU-3E-STD-40-1000
7. UNLESS OTHERWISE SPECIFIED, ALL PRESSURE AND FLOW INSTRUMENTATION ROOT VALVES SHALL BE 3/4" GLOBE.
8. CFM VALUES IN ( ) ARE AIR FLOW CONDITIONS WHEN FUME HOOD IS OPERATING.
9. CONTROL AIR PIPING TO DM-838-051 & DM-838-052 HAS BEEN DISCONNECTED
10. FLOW RATES (CFM) FOR BOILER HOUSE RESERVED CONTINGENT UPON WALKDOWN TO RECALIBRATE THE AREAS.
11. THE INTERNALS OF DAMPER HV-DM-330 HAVE BEEN REMOVED.

NO.	DWG NO.	TITLE
3	BR-2001 SH3	MECHANICAL DRAWING INDEX
2	BR-2001 SH2	ABBREVIATIONS
1	BR-2001 SH1	MECHANICAL SYMBOLS

REFERENCES

CAD FILE NAME: BR M611 S1 R31

REVISION 24 OF THIS DRAWING WAS REDRAWN FROM PART OF BR-M611, REV. 22

REVISION 31 OF THIS DRAWING WAS TRANSLATED TO AUTOCAD FROM CADAM FILE:V3E.835.21.0100.001-.310P

THIS IS A COMPUTER GENERATED DRAWING DO NOT REVISE IT MANUALLY

DRAWN MARCY A. CARLSON 11-16-2000

CHECKED D.ABRAMS/C.A.O. 12-28-2000

ENGINEER

ENGINEERING MANAGER

AmerGen

NEW RADWASTE BUILDING
HVAC
FLOW DIAGRAM

OYSTER CREEK

DWG. NO. BR M611 | SH. 1 OF 3 | REV. 33

SCALE : NONE

WA. NO.

DWG. NO. BR M611 | SH. 1 OF 3

REVISIONS		
REV	ZONE	DESCRIPTION
28	BCE6	ECD C212011

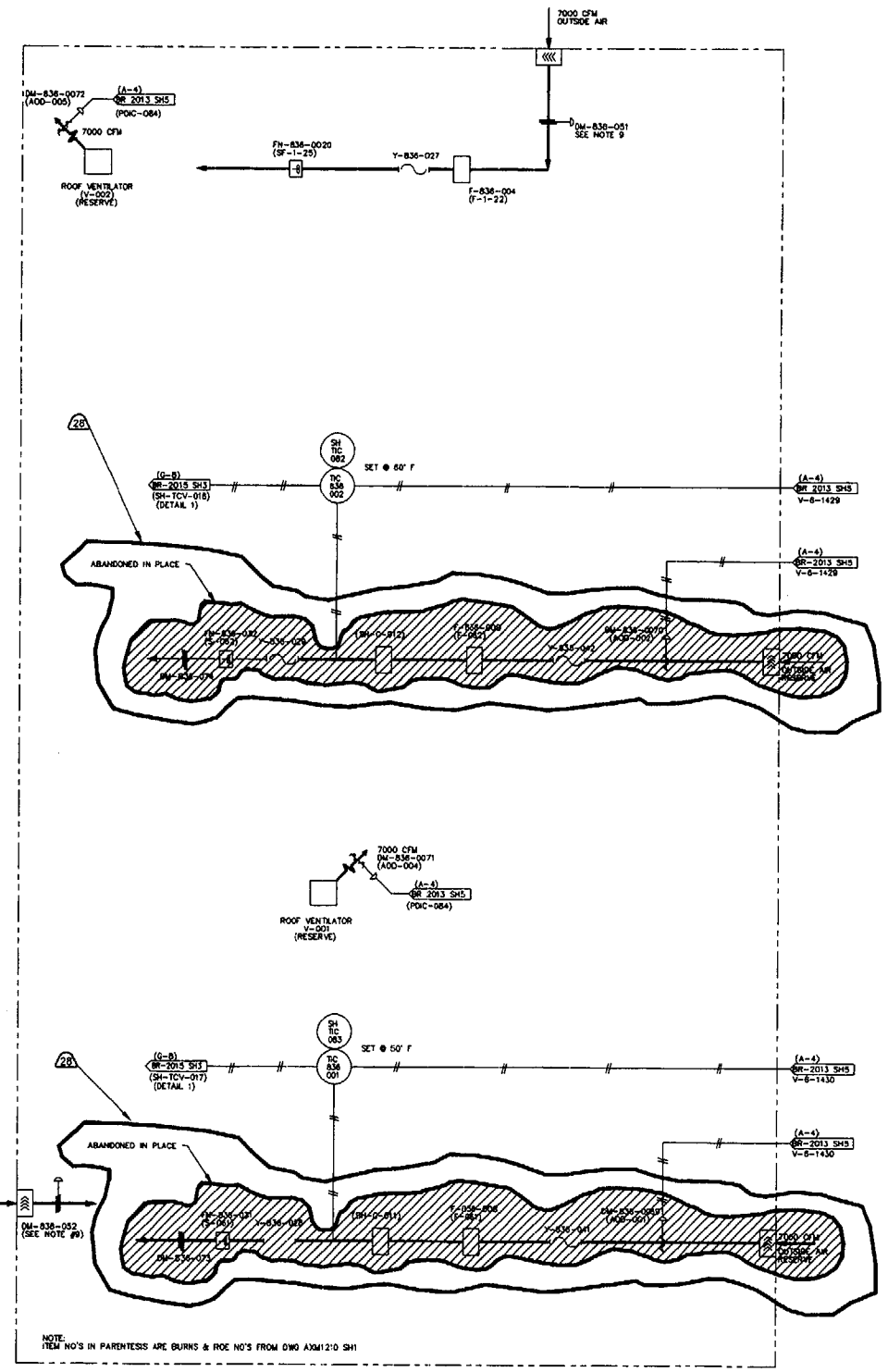

NOTES:

1. SEE SHEET 1 FOR NOTES AND REFERENCES.
2. ALL VALVES, INSTRUMENTS AND SPECIALITY NUMBERS ARE PREFIXED WITH 836 UNLESS OTHERWISE NOTED.

CAD FILE NAME: BR M611 S2 R28

REVISION 27 OF THIS DRAWING WAS TRANSLATED TO AUTOCAD FROM CAD FILE: V3E.836.21.0100.002-.2701

REVISION 24 OF THIS DRAWING WAS REDRAWN FROM PART OF GU-3E-820-21-1000 REV 0.

THIS IS A COMPUTER GENERATED DRAWING DO NOT REVISE IT MANUALLY

DRAWN	T.MUSZKO,JR.	3-19-99
CHECKED	B.STANKIEWICZ	3-26-99
PROJECT ENGINEER	Chris Tuffy	4-6-99
CHIEF ENGINEER		
MANAGER OF ENGINEERING		

GPU NUCLEAR

HEATING BOILER HOUSE
H & V
FLOW DIAGRAM

OYSTER CREEK | DWG. NO. BR M611 | SH. 2 OF 3 | REV. 28

SCALE : NONE

PIMS # N/A

NO.	DWG. NO.	TITLE
		REFERENCES

DWG NO. BR M611 SH. 2 OF 3

REVISIONS		
REV	ZONE	DESCRIPTION
30	B-7	ECD C307409

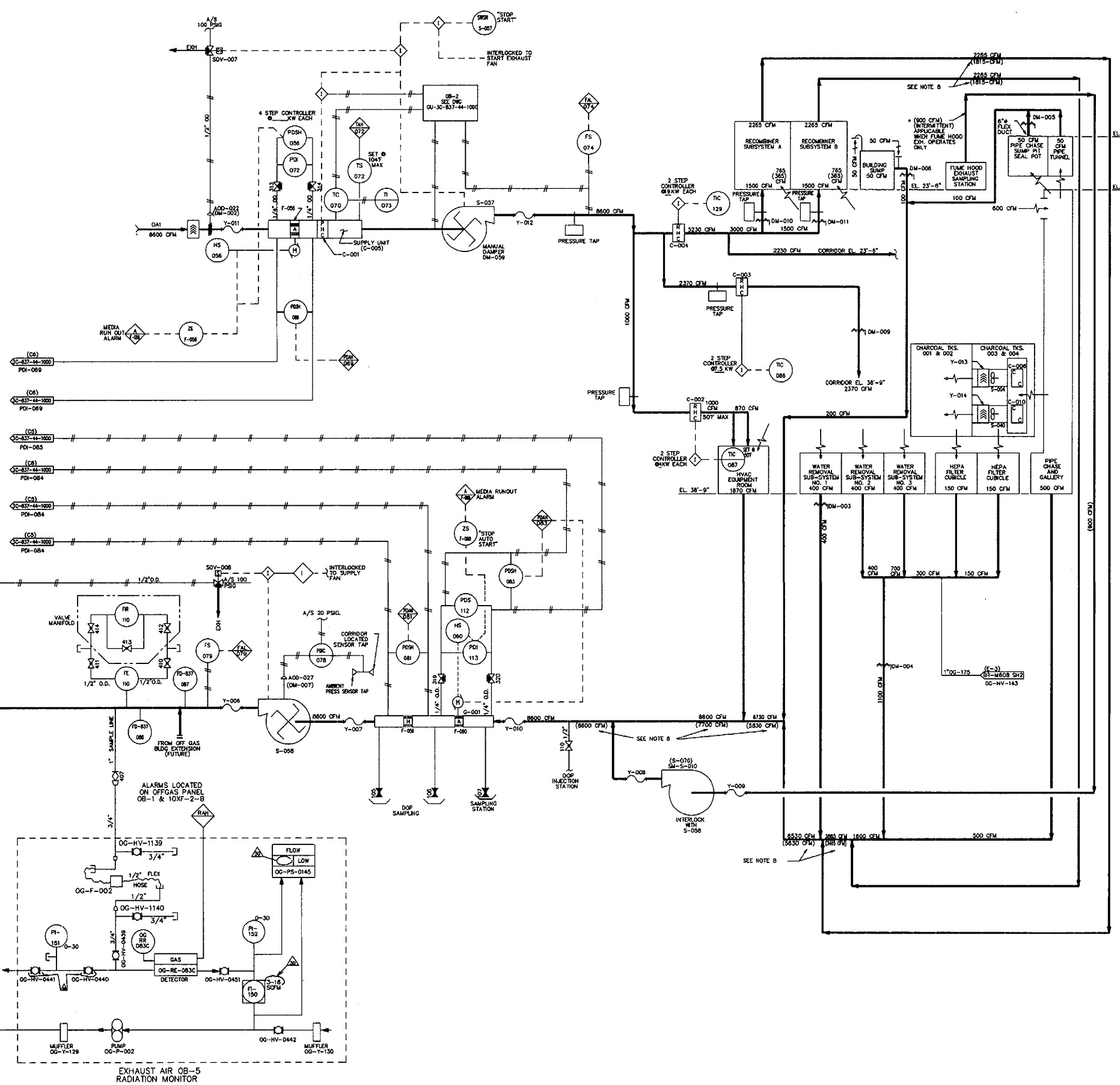

NOTES:

1. SEE SHEET 1 FOR NOTES AND REFERENCES.
2. ALL VALVES, INSTRUMENTS AND SPECIALITY NUMBERS ARE PREFIXED BY HV-HV- UNLESS OTHERWISE NOTED.

LEGEND :

NO.	DWG. NO.	TITLE
		REFERENCES

CAD FILE NAME: BR M611 S3 R30

REVISION 27 OF THIS DRAWING WAS REDRAWN FROM PART OF VT 905522.
REVISION 28 OF THIS DRAWING WAS TRANSLATED TO AUTOCAD FROM CADAM FILE: V3E,837,21,0100,003-,2801.

THIS IS A COMPUTER GENERATED DRAWING DO NOT REVISE IT MANUALLY

GPU NUCLEAR

DRAWN: NANCY A. CARLSON 5-6-98
CHECKED: NICK TITOLO 5/7/98
PROJ. ENGINEER: 5/7/98
MANAGER: DATE
SUPERVISING ENGINEER: DATE

AUGMENTED OG BLDG.
H & V
FLOW DIAGRAM

OYSTER CREEK | DWG. NO. BR M611 | SH. 3 OF 3 | REV. 30
SCALE : NONE

PIMS # N/A

DWG.NO. BR M611 SH. 3 OF 3

REVISIONS		
REV	ZONE	DESCRIPTION
58	ALL	ISI BOUNDARY INFO INCORPORATED

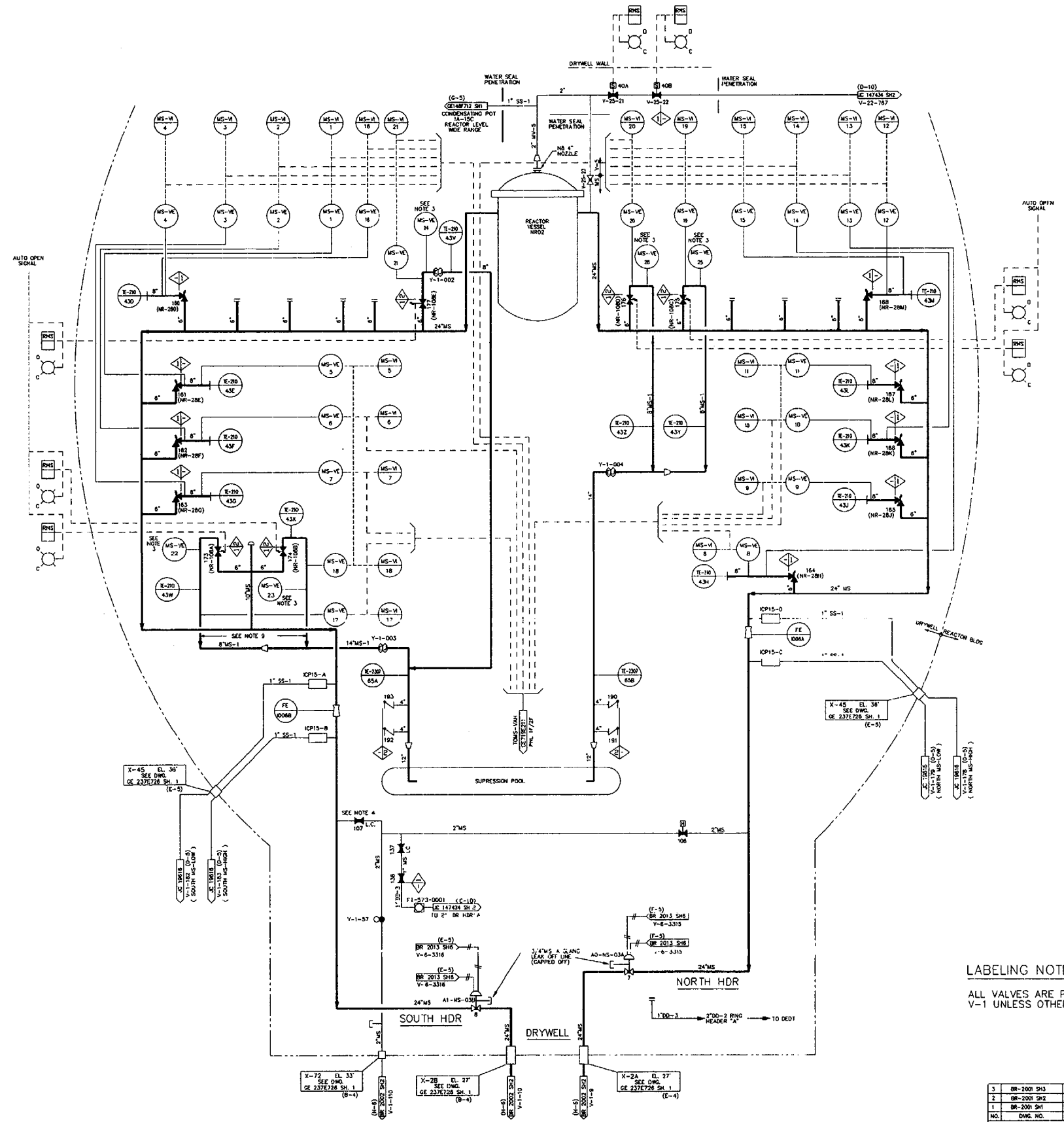

NOTES:

1. "SEE" VALVE LABELING NOTE
2. PRESSURE TRANSMITTERS EP1-1,-2,-3,-4,-5,-6,-9,-10,-11 SHALL BE MTD. AND WIRED TO TERMINALS BY GE/LSTC AS SHOWN ON G.E. DWGS.
3. VE-22,23,24,25 & 26 INSTALLED SPARES.
4. MOTOR OPER. FOR V.V. V-1-107 HAS BEEN REMOVED & V.V. IS GAGGED CLOSED.
5. PRESSURE TRANSMITTERS PT 21,PT 22 & PT 23 ARE NON FUNCTIONAL AND ABANDONED.
6. BLACK LINE PLOTS FOR NORMAL USE. COLOR PLOTS FOR ISI USE. ISI LEGEND REFERS TO COLOR PLOTS ONLY.

COLOR LEGEND

CLASS 1 - BLUE

CLASS 2 - RED

NON CLASS (-) - BLACK

LABELING NOTE

ALL VALVES ARE PREFIXED BY V-1 UNLESS OTHERWISE NOTED

NO.	DWG. NO.	TITLE
3	BR-2001 SH3	MECHANICAL DRAWING INDEX
2	BR-2001 SH2	ABBREVIATIONS
1	BR-2001 SH1	MECHANICAL SYMBOLS

REFERENCES

CAD FILE NAME: BR 2002 S1 R58

REVISION 56 OF THIS DWG. WAS TRANSLATED TO AUTOCAD FROM CAD FILE:V3E,411,21,0100,001-,5601

REVISION 41 OF THIS DRAWING WAS REDRAWN FROM PART OF BR 2002, REV 35 & PART OF GE 237E798

REVISION 58 OF THIS DRAWING SUPERSEDES ISI BOUNDARY DRAWING GU 3E-411-A1-001 SH. 1 REV. 17

THIS IS A COMPUTER GENERATED DRAWING DO NOT REVISE IT MANUALLY

DRAWN: RANDY A. CARLSON 11-15-99

CHECKED: DAN ABBRUZZATO 11-16-99

GPU NUCLEAR

MAIN STEAM SYSTEM
FLOW DIAGRAM

OYSTER CREEK | DWG. NO. BR 2002 | SH 1 OF 4 | REV. 58

SCALE: NONE

PIMS # N/A

DWG. NO. BR 2002 SH. 1 OF 4

REVISIONS		
REV	ZONE	DESCRIPTION
59	F-5 F-7	ECO C401222

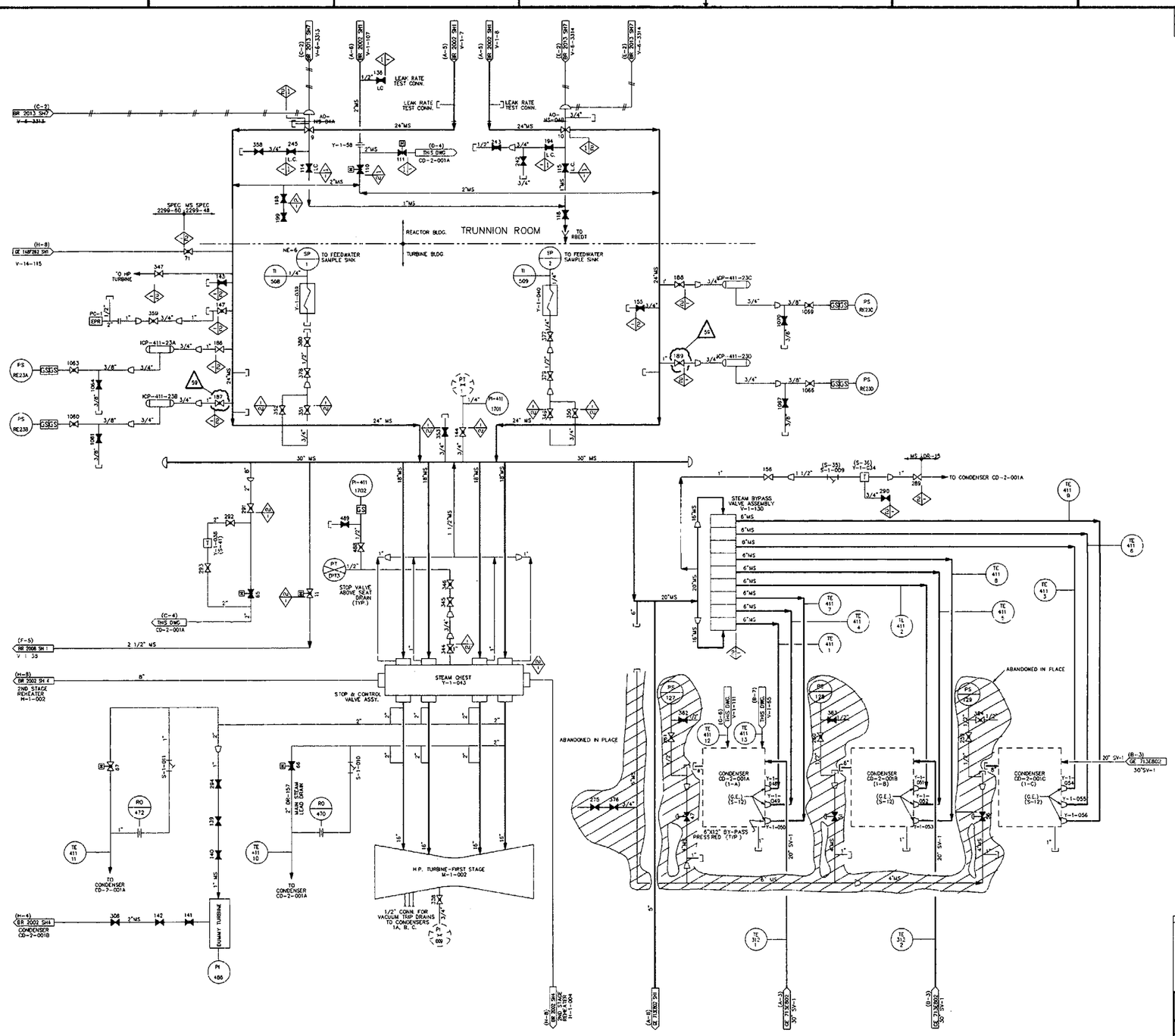

NOTES:

1. SEE VALVE LABELING NOTE
2. BLACK LINE PLOTS ARE FOR NORMAL USE. COLOR PLOTS ARE FOR ISI USE. ISI LEGEND REFERS TO COLOR PLOTS ONLY.

COLOR LEGEND

CLASS 1 – BLUE
CLASS 2 – RED
NON CLASS (–) – BLACK

LABELING NOTE

ALL VALVES ARE PREFIXED BY V-1 UNLESS OTHERWISE NOTED

NO.	DWG. NO.	TITLE
3	BR-2001 SH3	MECHANICAL DRAWING INDEX
2	BR-2001 SH2	ABBREVIATIONS
1	BR-2001 SH1	MECHANICAL SYMBOLS

REFERENCES

CAD FILE NAME: BR 2002 S2 R59

REVISION 54 OF THIS DRAWING WAS TRANSLATED TO AUTOCAD FROM CAD FILE: V3E.411.21.0100.002-.5401

REVISION 41 OF THIS DRAWING WAS REDRAWN FROM PART OF BR 2002 REV 35

REVISION 57 OF THIS DRAWING SUPERCEDES CJ 3E-411-A1-001 SH. 2 REV. 18.

THIS IS A COMPUTER GENERATED DRAWING DO NOT REVISE IT MANUALLY

DRAWN: DATE
NANCY A. CARLSON 12/20/00
CHECKED: DATE
D. ARBROSCATO 12/20/00
PROJECT ENGINEER: DATE
D. LINETS 12/20/00
ENGINEERING MANAGER: DATE
N/A
SUPERVISING CONSULTANT: N/A

AmerGen

MAIN STEAM SYSTEM
FLOW DIAGRAM

OYSTER CREEK | DWG. NO. BR 2002 | SH. 2 OF 4 | REV. 59
SCALE: NONE | PIMS # N/A

DRAWING NO. BR 2002 SH. 2 OF 4

REVISIONS		
REV.	ZONE	DESCRIPTION
52	F-4	ECO C307449

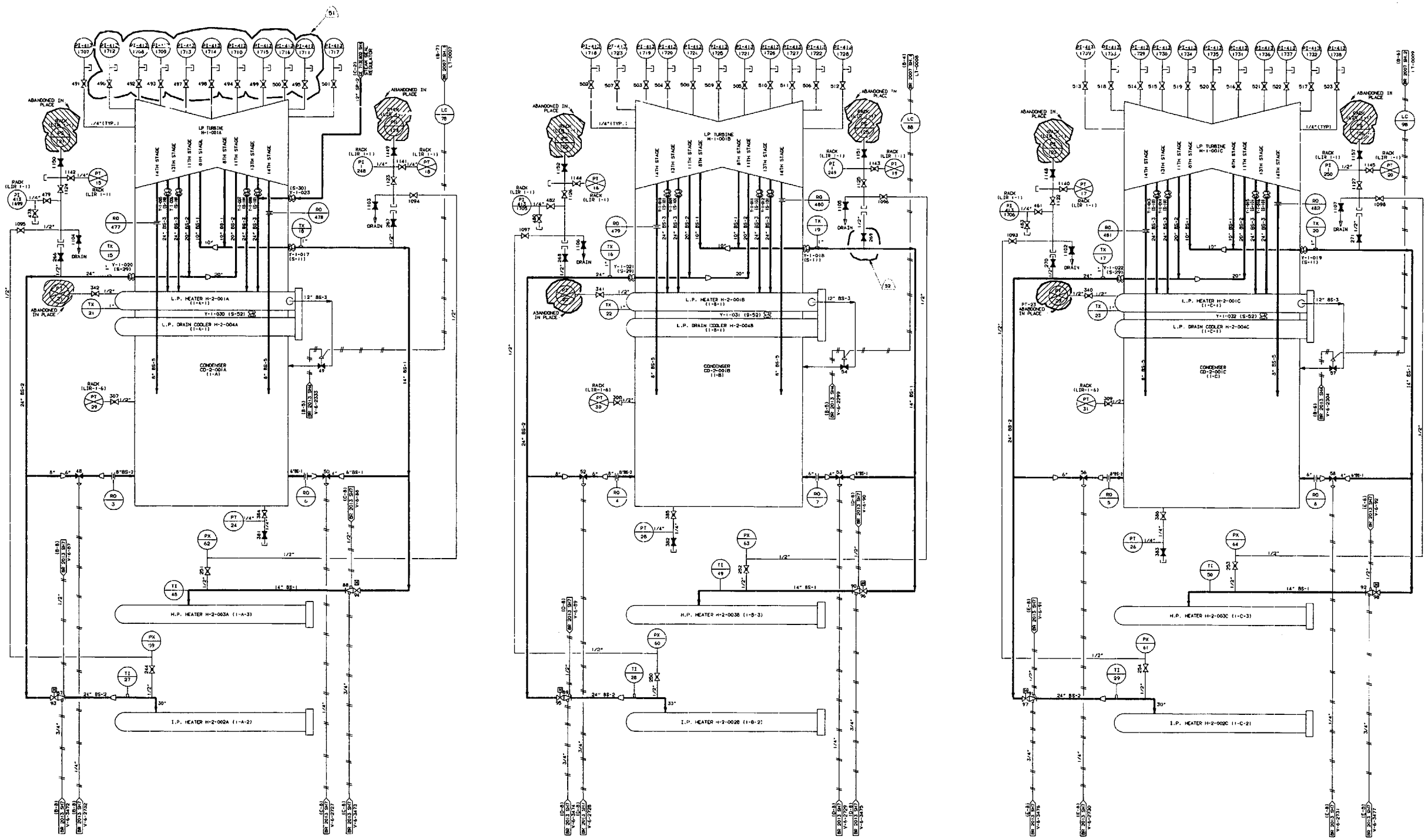

NOTES: SEE SHEET 1 FOR OTHER NOTES AND REFERENCES.

1. ALL VALVES ARE PREFIXED BY V-1 UNLESS OTHERWISE NOTED.

CAD FILE: V3E.413.21.0100.003-.520P
THIS IS A COMPUTER GENERATED DWG. DO NOT REVISE IT MANUALLY

REVISION 41 OF THIS DRAWING WAS REDRAWN FROM PART OF BR 2002 REV 35

REFERENCES		
NO.	DWG. NO.	TITLE
2.	HO MP78043-06.SH1	TURB.BLDG. INSTRUMENT RACK LIR-1-6
1.	HO MP78043-01.SH1	TURB.BLDG. INSTRUMENT RACK LIR-1-1

T.W.USZKO JR. 2/02/96 DATE
DRAWN: R.STAWNIEWICZ 2/02/96 DATE
CHECKED: N/A DATE
DESIGN LEADER: N/A DATE
ENGINEER: N/A DATE
MANAGER APPROVAL: N/A DATE

GPU NUCLEAR

EXTRACTION (BLEED) STEAM SYSTEM FLOW DIAGRAM

OYSTER CREEK

DWG. NO. BR 2002 | SHEET 3 OF 4 | REV. 52

SCALE: NONE

ENG.MECH. | BA | W.O.

BR 2002 SH 3 OF 4

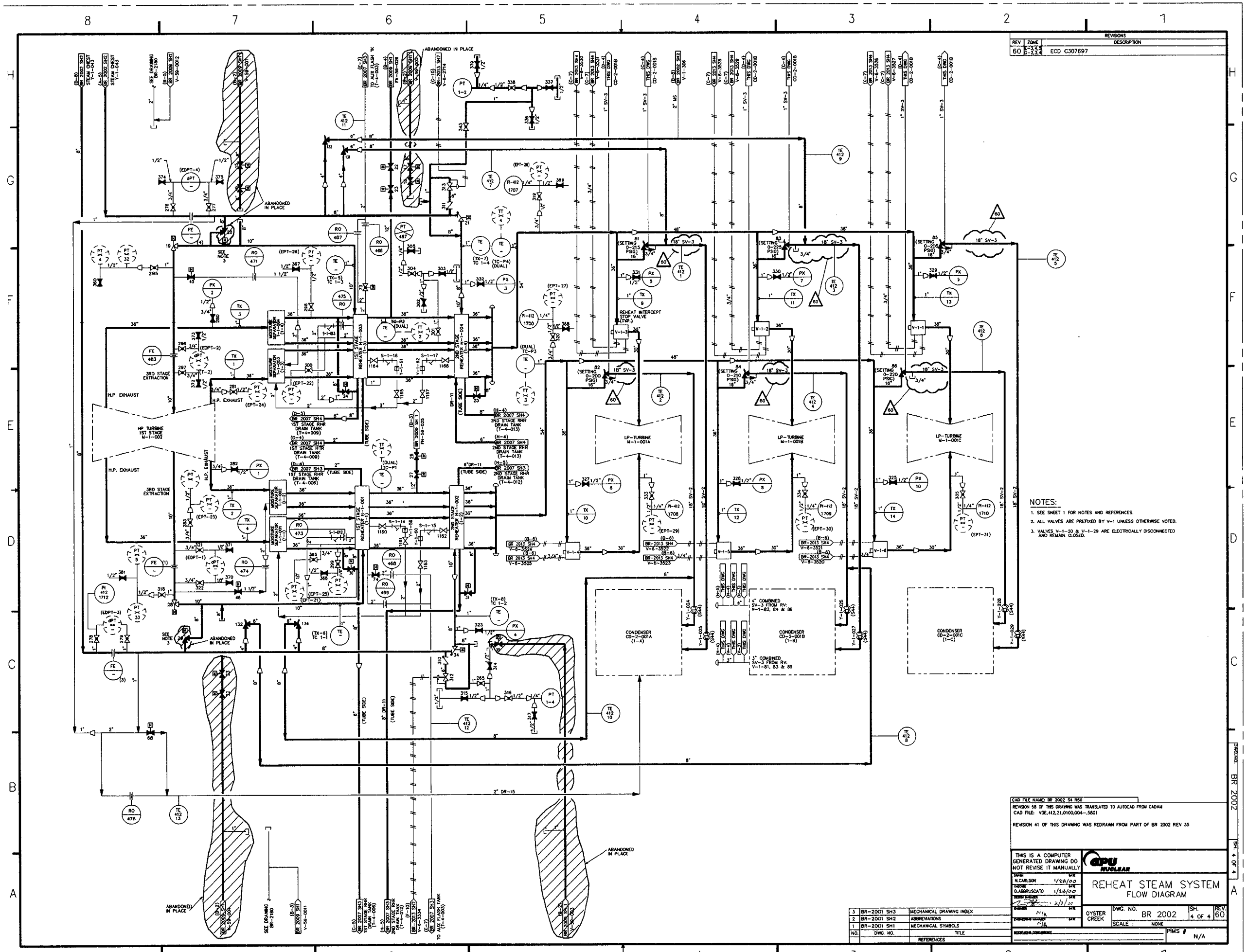
HP TURBINE 1ST STAGE M-1-002
LP-TURBINE M-1-001A
LP-TURBINE M-1-001B
LP-TURBINE M-1-001C
CONDENSER CD-2-001A (1-A)
CONDENSER CD-2-001B (1-B)
CONDENSER CD-2-001C (1-C)
1ST STAGE REHEATER 1-1-001
2ND STAGE REHEATER 1-1-002
REHEAT INTERCEPT STOP VALVE (THP.)
3RD STAGE EXTRACTION
H.P. EXHAUST
ABANDONED IN PLACE
SEE NOTE 3
2" DR-15
NOTES:
1. SEE SHEET 1 FOR NOTES AND REFERENCES.
2. ALL VALVES ARE PREFIXED BY V-1 UNLESS OTHERWISE NOTED.
3. VALVES V-1-20 & V-1-29 ARE ELECTRICALLY DISCONNECTED AND REMAIN CLOSED.
CAD FILE NAME: BR 2002 SH R60
REVISION 58 OF THIS DRAWING WAS TRANSLATED TO AUTOCAD FROM CADAM
CAD FILE: V3E.412.21.0100.004--.5801
REVISION 41 OF THIS DRAWING WAS REDRAWN FROM PART OF BR 2002 REV 35
THIS IS A COMPUTER GENERATED DRAWING DO NOT REVISE IT MANUALLY
GPU NUCLEAR
REHEAT STEAM SYSTEM
FLOW DIAGRAM
OYSTER CREEK
DWG. NO. BR 2002
SH. 4 OF 4
REV. 60
SCALE : NONE
PIMS # N/A
REFERENCES
NO. | DWG. NO. | TITLE
3 | BR-2001 SH3 | MECHANICAL DRAWING INDEX
2 | BR-2001 SH2 | ABBREVIATIONS
1 | BR-2001 SH1 | MECHANICAL SYMBOLS
REVISIONS
REV | ZONE | DESCRIPTION
60 | D-3,4,5 D-2,3,4 | ECD C307697

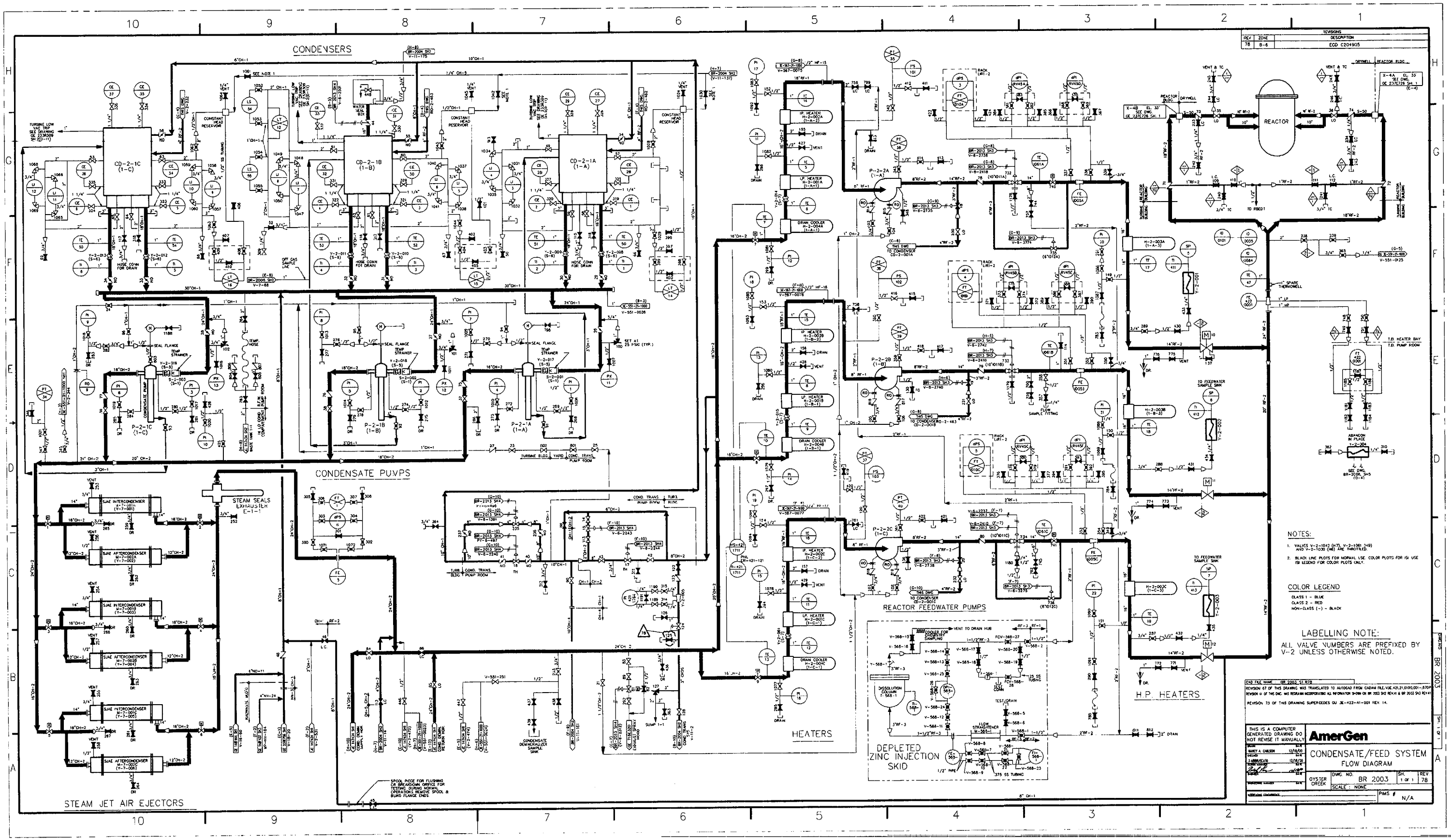
CONDENSERS
CD-2-1C (1-C)
CD-2-1B (1-B)
CD-2-1A (1-A)
CONDENSATE PUMPS
P-2-1C (1-C)
P-2-1B (1-B)
P-2-1A (1-A)
STEAM SEALS EXHAUSTER
STEAM JET AIR EJECTORS
REACTOR FEEDWATER PUMPS
P-2-2A (1-A)
P-2-2B (1-B)
P-2-2C (1-C)
HEATERS
DEPLETED ZINC INJECTION SKID
REACTOR
H.P. HEATERS
NOTES:
1. VALVES V-2-1042 (H7), V-2-1061 (H9) AND V-2-1030 (H8) ARE THROTTLED.
2. BLACK LINE PLOTS FOR NORMAL USE. COLOR PLOTS FOR ISI USE ISI LEGEND FOR COLOR PLOTS ONLY.
COLOR LEGEND
CLASS 1 - BLUE
CLASS 2 - RED
NON-CLASS (-) - BLACK
LABELLING NOTE:
ALL VALVE NUMBERS ARE PREFIXED BY V-2 UNLESS OTHERWISE NOTED.
REVISIONS
REV ZONE DESCRIPTION
78 B-6 ECO C204905
THIS IS A COMPUTER GENERATED DRAWING DO NOT REVISE IT MANUALLY
AmerGen
CONDENSATE/FEED SYSTEM
FLOW DIAGRAM
OYSTER CREEK
DWG. NO. BR 2003
SH. 1 OF 1
REV 78
SCALE : NONE
PIMS # N/A

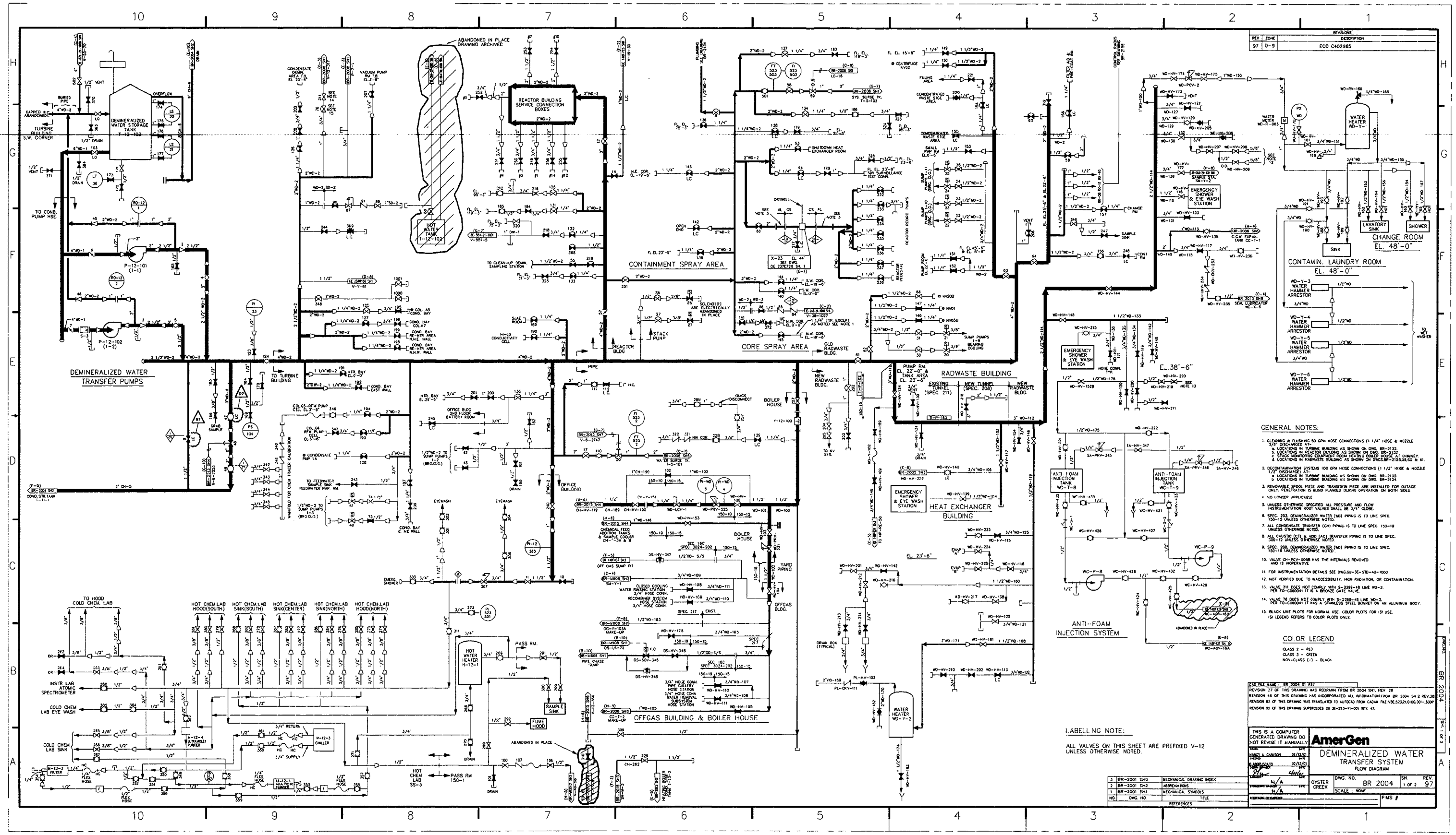

GENERAL NOTES:

1. CLEANING & FLUSHING 50 GPM HOSE CONNECTIONS (1 1/4" HOSE & NOZZLE 3/8" DISCHARGE) AT:
   a. LOCATIONS IN TURBINE BUILDING AS SHOWN ON DWG. BR-2132.
   b. LOCATIONS IN REACTOR BUILDING AS SHOWN ON DWG. BR-2131.
   c. LOCATIONS IN RADWASTE BUILDING AS SHOWN ON DWG. BR-2133 AT CHIMNEY.
   d. LOCATIONS IN RADWASTE BUILDING AS SHOWN ON DWGS.BR-2130,2,3,50 & 61.
2. DECONTAMINATION SYSTEMS 100 GPM HOSE CONNECTIONS (1 1/2" HOSE & NOZZLE 1/2" DISCHARGE) AT:
   a. LOCATIONS IN TURBINE BUILDING AS SHOWN ON DWG. BR-2132.
   b. LOCATIONS IN TURBINE BUILDING AS SHOWN ON DWG. BR-2134.
3. REMOVABLE SPOOL PIECE AND TRANSITION PIECE ARE INSTALLED FOR OUTAGE ONLY. PENETRATION IS BLIND FLANGED DURING OPERATION ON BOTH SIDES.
4. NO LONGER APPLICABLE.
5. UNLESS OTHERWISE SPECIFIED ALL PRESSURE AND FLOW INSTRUMENTATION ROOT VALVES SHALL BE 3/4" GLOBE.
6. SPEC. 202, DEMINERALIZER WATER (WD) PIPING IS TO LINE SPEC. 150-15 UNLESS OTHERWISE NOTED.
7. ALL CONDENSATE TRANSFER (CH) PIPING IS TO LINE SPEC. 150-18 UNLESS OTHERWISE NOTED.
8. ALL CAUSTIC (CT) & ACID (AC) TRANSFER PIPING IS TO LINE SPEC. 300-12 UNLESS OTHERWISE NOTED.
9. SPEC. 208, DEMINERALIZED WATER (WD) PIPING IS TO LINE SPEC. 150-18 UNLESS OTHERWISE NOTED.
10. VALVE CH-PCV-0068 HAS THE INTERNALS REMOVED AND IS INOPERATIVE.
11. FOR INSTRUMENTATION DETAILS SEE DWG.OJ-XE-STD-40-1000.
12. NOT VERIFIED DUE TO INACCESSIBILITY, HIGH RADIATION, OR CONTAMINATION.
13. VALVE 211 DOES NOT COMPLY WITH G-2208-48 LINE WD-2. PER FO-C060041 IT IS A BRONZE GATE VALVE.
14. VALVE 78 DOES NOT COMPLY WITH G-2208-48 LINE WD-2. PER FO-C060041 IT WAS A STAINLESS STEEL BONNET ON AN ALUMINUM BODY.
15. BLACK LINE PLOTS FOR NORMAL USE. COLOR PLOTS FOR ISI USE. ISI LEGEND REFERS TO COLOR PLOTS ONLY.

COLOR LEGEND

CLASS 2 - RED
CLASS 3 - GREEN
NON-CLASS (-) - BLACK

LABELLING NOTE:

ALL VALVES ON THIS SHEET ARE PREFIXED V-12 UNLESS OTHERWISE NOTED.

NO.	DWG. NO	TITLE
3	BR-2001 SH3	MECHANICAL DRAWING INDEX
2	BR-2001 SH2	ABBREVIATIONS
1	BR-2001 SH1	MECHANICAL SYMBOLS

REFERENCES

CAD FILE NAME: BR 2004 S1 R37

REVISION 37 OF THIS DRAWING WAS REDRAWN FROM BR 2004 SH1, REV 29
REVISION 46 OF THIS DRAWING HAS INCORPORATED ALL INFORMATION FROM BR 2304 SH 2 REV.38
REVISION 83 OF THIS DRAWING WAS TRANSLATED TO AUTOCAD FROM CADAM FILE:VZ.5,2,2,2,0-00,30'-.830"
REVISION 92 OF THIS DRAWING SUPERCEDES OV XE-323-11-001 REV. 47.

THIS IS A COMPUTER GENERATED DRAWING DO NOT REVISE IT MANUALLY.

DRAWN NANCY A. CARLSON 02/23/01
CHECKED 02/23/01
CLASSIFICATION 02/23/01
DATE 4/4/92
LICENSING N/A
TECHNICAL REVIEW N/A
VERIFICATION REQUIRED N/A

AmerGen

DEMINERALIZED WATER TRANSFER SYSTEM
FLOW DIAGRAM

OYSTER CREEK | DWG. NO. BR 2004 | SH 1 of 2 | REV 97
SCALE : NONE
PIMS #

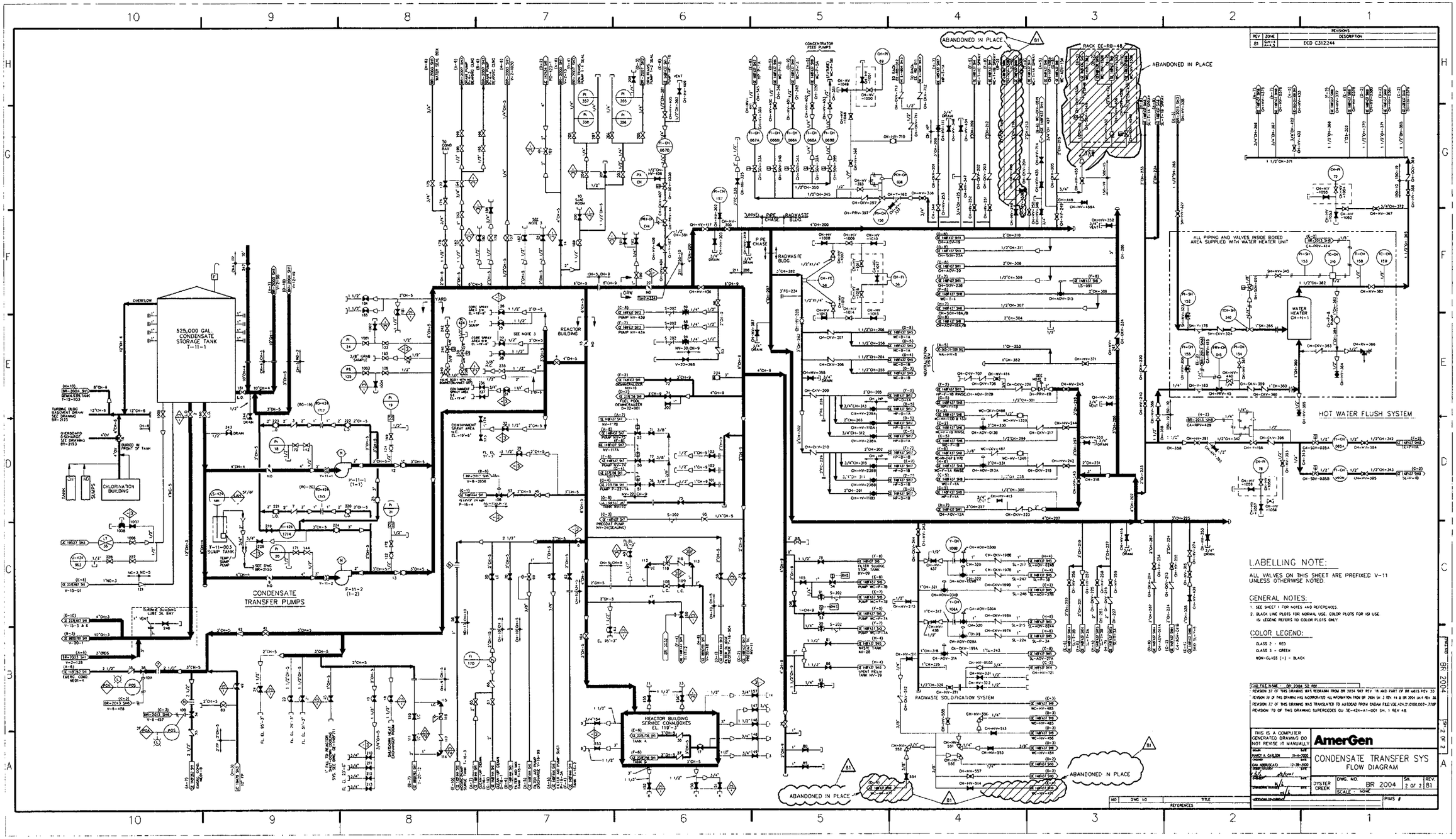
525,000 GAL CONDENSATE STORAGE TANK T-11-1
CHLORINATION BUILDING
CONDENSATE TRANSFER PUMPS
T-11-003 SUMP TANK
REACTOR BUILDING
REACTOR BUILDING SERVICE CONNECTIONS EL 119'-3"
RADWASTE BLDG
ABANDONED IN PLACE
RACK EE-RB-48
WATER HEATER CH-H-1
HOT WATER FLUSH SYSTEM
ALL PIPING AND VALVES INSIDE BOXED AREA SUPPLIED WITH WATER HEATER UNIT
RADWASTE SOLIDIFICATION SYSTEM
LABELLING NOTE:
ALL VALVES ON THIS SHEET ARE PREFIXED V-11 UNLESS OTHERWISE NOTED.
GENERAL NOTES:
1. SEE SHEET 1 FOR NOTES AND REFERENCES.
2. BLACK LINE PLOTS FOR NORMAL USE. COLOR PLOTS FOR ISI USE. ISI LEGEND REFERS TO COLOR PLOTS ONLY.
COLOR LEGEND:
CLASS 2 - RED
CLASS 3 - GREEN
NON-CLASS (-) - BLACK
REVISIONS
REV ZONE DESCRIPTION
B1 ECO C312244
THIS IS A COMPUTER GENERATED DRAWING DO NOT REVISE IT MANUALLY
AmerGen
CONDENSATE TRANSFER SYS FLOW DIAGRAM
OYSTER CREEK
DWG. NO. BR 2004
SH. 2 of 2
REV. B1
SCALE NONE
REFERENCES

REV	ZONE	REVISIONS DESCRIPTION
45	NOTED	ECO C312461

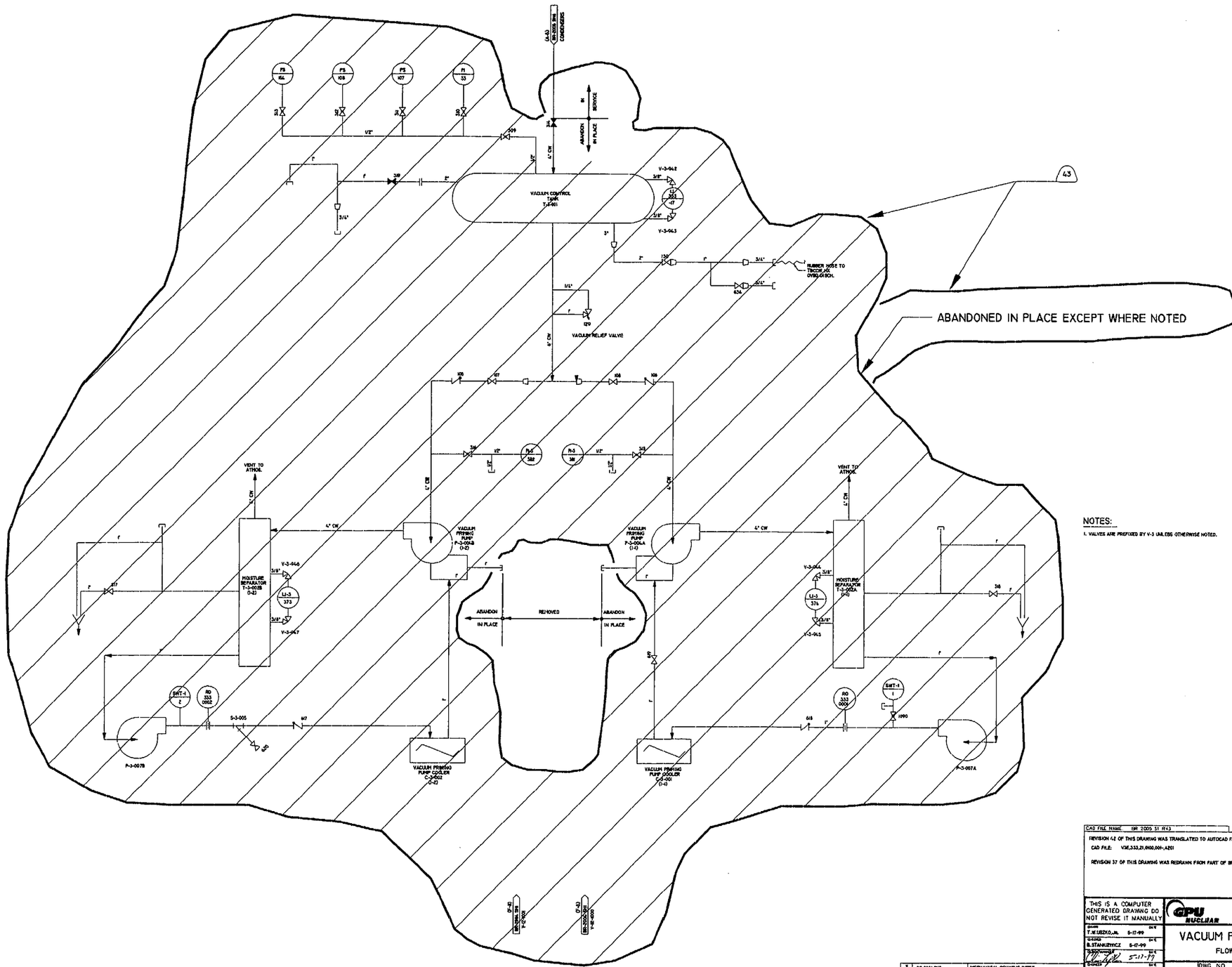

NOTES:

1. VALVES ARE PREFIXED BY V-3 UNLESS OTHERWISE NOTED.

NO.	DWG. NO.	TITLE
3	BR-2001 SH3	MECHANICAL DRAWING INDEX
2	BR-2001 SH2	ABBREVIATIONS
1	BR-2001 SH1	MECHANICAL SYMBOLS

REFERENCES

CAD FILE NAME: BR 2005 S1 R43

REVISION 42 OF THIS DRAWING WAS TRANSLATED TO AUTOCAD FROM
CAD FILE: V3E,333,21,R400,001-,A201

REVISION 37 OF THIS DRAWING WAS REDRAWN FROM PART OF BR 2005, REV.31

THIS IS A COMPUTER GENERATED DRAWING DO NOT REVISE IT MANUALLY

DRAWN T.W.LISZKO,JR. 5-17-99
CHECKED B.STANKEVYCZ 5-17-99
APPROVED 5-17-99
DESIGNED
ENGINEERING REVIEWED
INTERNAL DISTRIBUTION

GPU NUCLEAR

VACUUM PRIMING SYS.

FLOW DIAGRAM

OYSTER CREEK | DWG. NO. BR 2005 | SH. 1 OF 6 | REV. 45
SCALE : NONE
PIMS # N/A

DWG. NO. BR 2005 SH. 1 OF 6

REVISIONS		
REV	ZONE	DESCRIPTION
80	G-7,8	ECO C307477

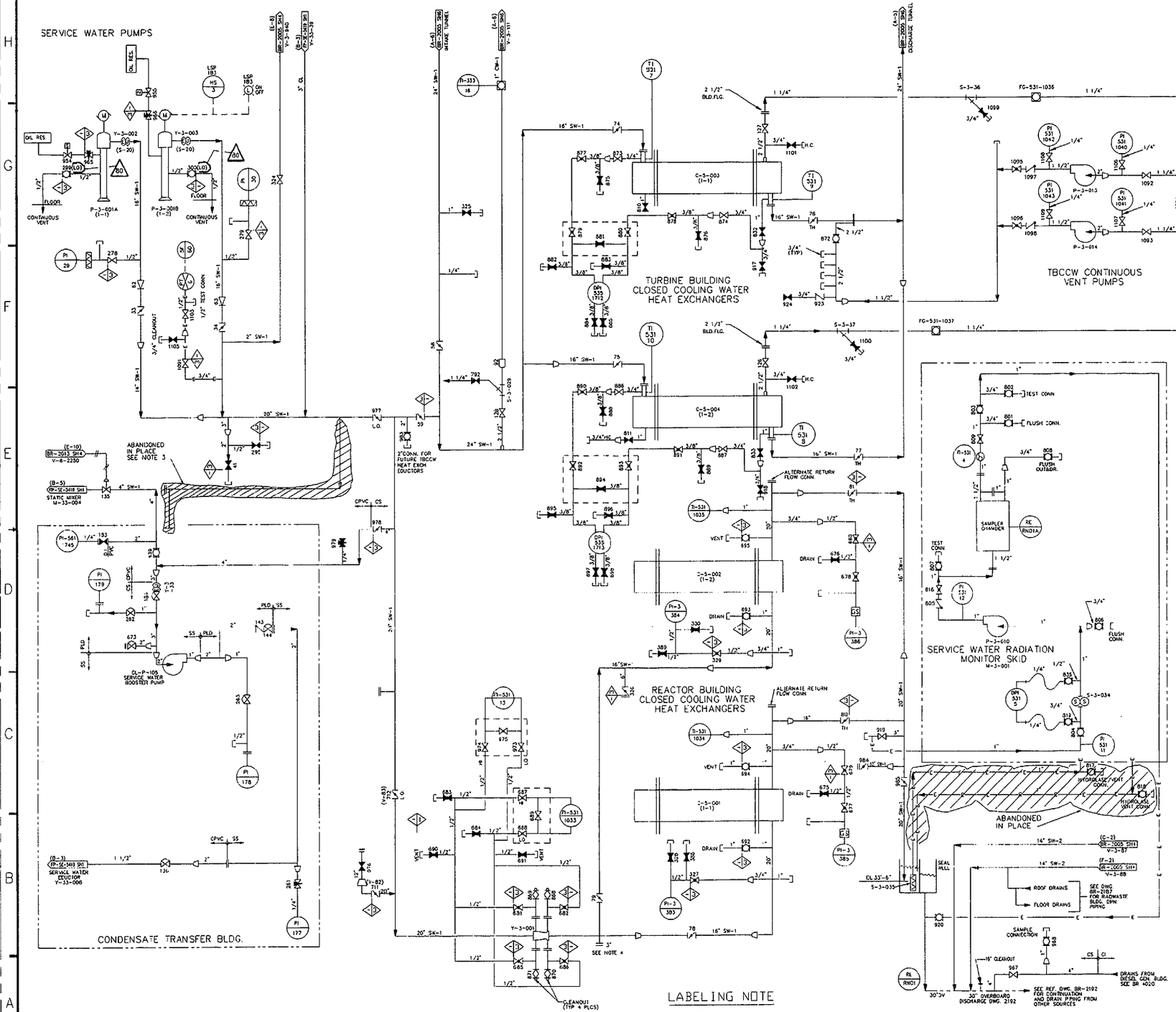

NOTES:

1. SEE SHEET 1 FOR NOTES AND REFERENCE.
2. SEE VALVE LABELING NOTE.
3. 3" CHLORINATION LINE ABANDONED IN PLACE AND FILLED WITH GROUT.
4. 3" CONNECTION AND BLIND FLANGE IS A LEAK REPAIR. 3" PIPE ENCAPSULATES A LEAK. SEE CAP 01999-0236. PIPE CONNECTION IS NOT DRILLED THROUGH.
5. BLACK LINE PLOTS ARE FOR NORMAL USE. COLOR PLOTS ARE FOR ISI USE. ISI LEGEND REFERS TO COLOR PLOTS ONLY.

COLOR LEGEND:

CLASS 3 - GREEN
NON CLASS (-) - BLACK

LABELING NOTE

ALL VALVES ON THIS SHEET ARE PREFIXED V-3 UNLESS OTHERWISE NOTED.

CAD FILE: HH 2005 S2 R80

REVISION 71 OF THIS DRAWING WAS TRANSLATED TO AUTOCAD FROM CAD FILE: V3E.531.21.0100.002-.7101 REVISION 37 OF THIS DWG. WAS REDRAWN FROM PART OF BR 2005, REV.31, PART OF FP SE-3419, REV.17. REV 76 OF THIS DRAWING SUPERCEDES GU 3E-531-A1-001 REV. 35.

THIS IS A COMPUTER GENERATED DRAWING DO NOT REVISE IT MANUALLY!

DRAWN	NAME	DATE
	NANCY A. CARLSON	01/17/01
CHECKED	NAME	DATE
	DAN ABRUSCATO	01/17/01
PROJ. ENGINEER	NAME	DATE
		2-2-01
DISCIPLINE	NAME	DATE
ENGINEERING MANAGER	NAME	DATE

AmerGen

REACTOR & TURBINE BUILDING
SERVICE WATER SYSTEM
FLOW DIAGRAM

OYSTER CREEK

DWG. NO.	SH.	REV.
BR 2005	2 OF 6	80

SCALE : NONE

PIMS # N/A

NO.	DWG. NO.	TITLE
REFERENCES		

BR 2005 | SH. 2 OF 6

REVISIONS		
REV	ZONE	DESCRIPTION
52	D-1	ECO C315013

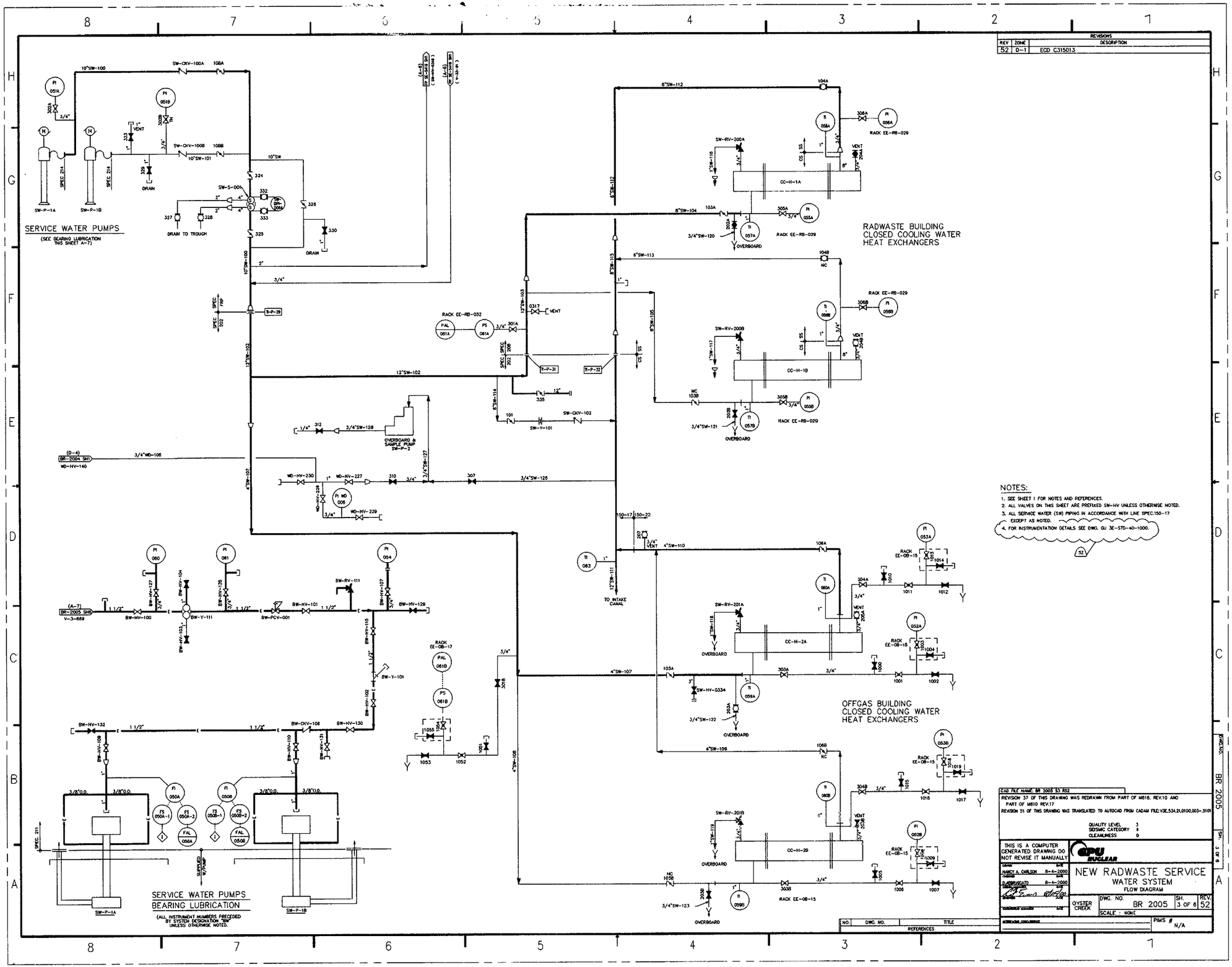

NOTES:

1. SEE SHEET 1 FOR NOTES AND REFERENCES.
2. ALL VALVES ON THIS SHEET ARE PREFIXED SW-HV UNLESS OTHERWISE NOTED.
3. ALL SERVICE WATER (SW) PIPING IN ACCORDANCE WITH LINE SPEC.150-17 EXCEPT AS NOTED.
4. FOR INSTRUMENTATION DETAILS SEE DWG. GJ 3E-STD-40-1000.

52

CAD FILE NAME: BR 2005 S1 R52

REVISION 37 OF THIS DRAWING WAS REDRAWN FROM PART OF M616, REV.10 AND PART OF M610 REV.17

REVISION 51 OF THIS DRAWING WAS TRANSLATED TO AUTOCAD FROM CADAM FILE:V3E.534.21.0100.003-.5101

QUALITY LEVEL 3
SEISMIC CATEGORY II
CLEANLINESS D

THIS IS A COMPUTER GENERATED DRAWING DO NOT REVISE IT MANUALLY

GPU NUCLEAR

DRAWN DATE
CHECKED NANCY A. CARLSON 8-4-2000 DATE
DESIGN APPROVED D. ABBRUZZATO 8-4-2000 DATE
DESIGN ENGINEER DATE
ENGINEERING MANAGER DATE

NEW RADWASTE SERVICE WATER SYSTEM

FLOW DIAGRAM

OYSTER CREEK | DWG. NO. BR 2005 | SH. 3 OF 6 | REV. 52

SCALE : NONE

PIMS # N/A

NO.	DWG. NO.	TITLE
REFERENCES		

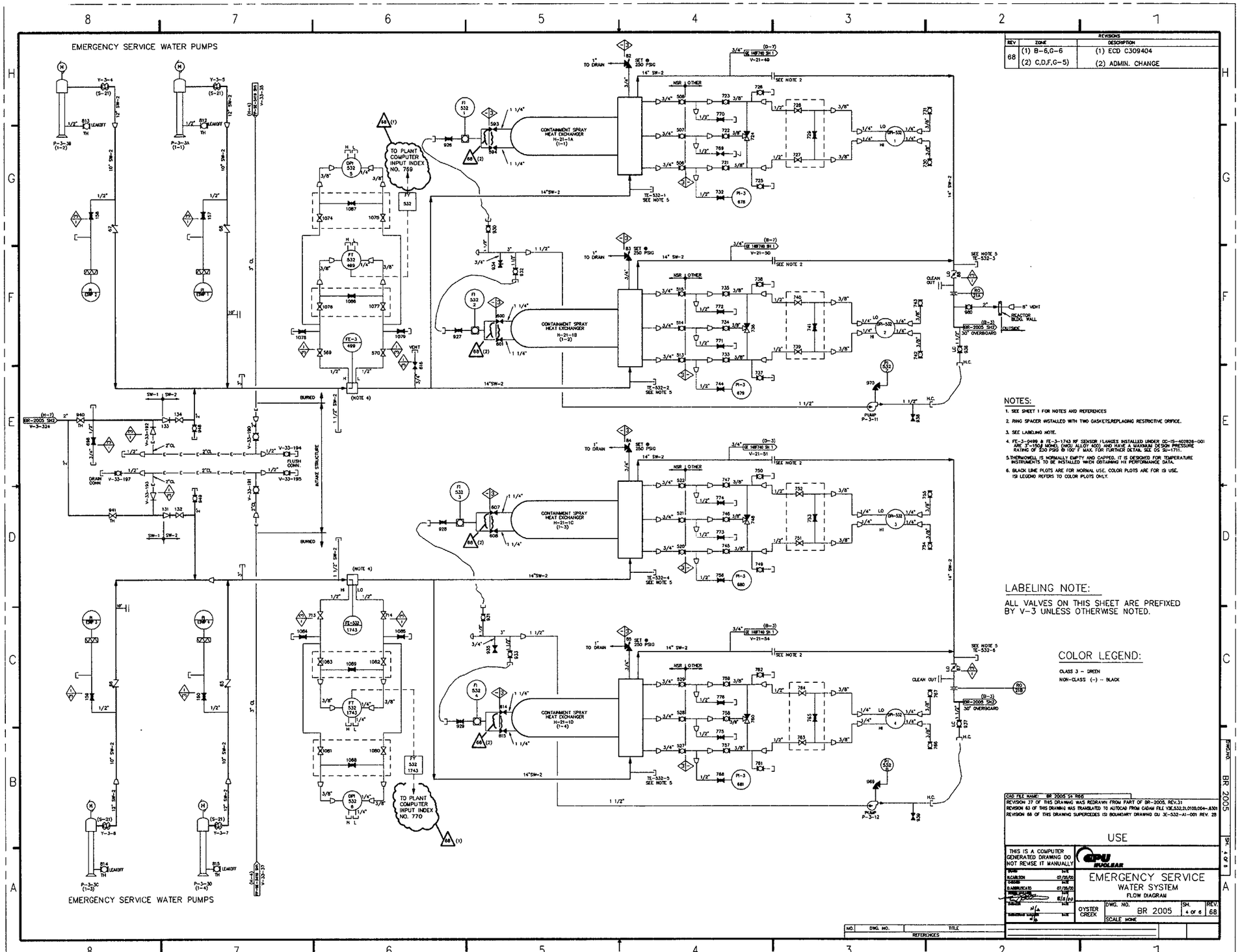

REVISIONS		
REV	ZONE	DESCRIPTION
68	(1) B-6,G-6 (2) C,D,F,G-5	(1) ECD C309404 (2) ADMIN. CHANGE

NOTES:

1. SEE SHEET 1 FOR NOTES AND REFERENCES
2. RING SPACER INSTALLED WITH TWO GASKETS,REPLACING RESTRICTIVE ORIFICE.
3. SEE LABELING NOTE.
4. FE-3-0499 & FE-3-1743 RF SENSOR FLANGES INSTALLED UNDER OC-15-402828-001 ARE 3"-150# MONEL (NICU ALLOY 400) AND HAVE A MAXIMUM DESIGN PRESSURE RATING OF 250 PSIG @ 100° F MAX. FOR FURTHER DETAIL SEE OS 32-1711.
5. THERMOWELL IS NORMALLY EMPTY AND CAPPED. IT IS DESIGNED FOR TEMPERATURE INSTRUMENTS TO BE INSTALLED WHEN OBTAINING HI PERFORMANCE DATA.
6. BLACK LINE PLOTS ARE FOR NORMAL USE. COLOR PLOTS ARE FOR ISI USE. ISI LEGEND REFERS TO COLOR PLOTS ONLY.

LABELING NOTE:

ALL VALVES ON THIS SHEET ARE PREFIXED BY V-3 UNLESS OTHERWISE NOTED.

COLOR LEGEND:

CLASS 3 - GREEN
NON-CLASS (-) - BLACK

CAD FILE NAME: BR 2005 S4 R68
REVISION 37 OF THIS DRAWING WAS REDRAWN FROM PART OF BR-2005, REV.31
REVISION 63 OF THIS DRAWING WAS TRANSLATED TO AUTOCAD FROM CADAM FILE V3E,532.21.0100.004-.6301
REVISION 68 OF THIS DRAWING SUPERCEDES ISI BOUNDARY DRAWING GU 3E-532-A1-001 REV. 28

USE

THIS IS A COMPUTER GENERATED DRAWING DO NOT REVISE IT MANUALLY

GPU NUCLEAR

DRAWN	H.G.	
ISI CALCULATION	07/05/00	
CHECKED	N/A	
ISI BOUNDARY CALCULATION	07/05/00	
ISI BOUNDARY CHECKED	N/A	
ISI BOUNDARY APPROVED	8/15/00	
ISI BOUNDARY SUPERVISOR	N/A	

EMERGENCY SERVICE WATER SYSTEM
FLOW DIAGRAM

OYSTER CREEK | DWG. NO. BR 2005 | SH. 4 OF 6 | REV. 68 | SCALE NONE

NO.	DWG. NO.	TITLE
		REFERENCES

REVISIONS		
REV	ZONE	DESCRIPTION
51	BC0/7	ECO C313407

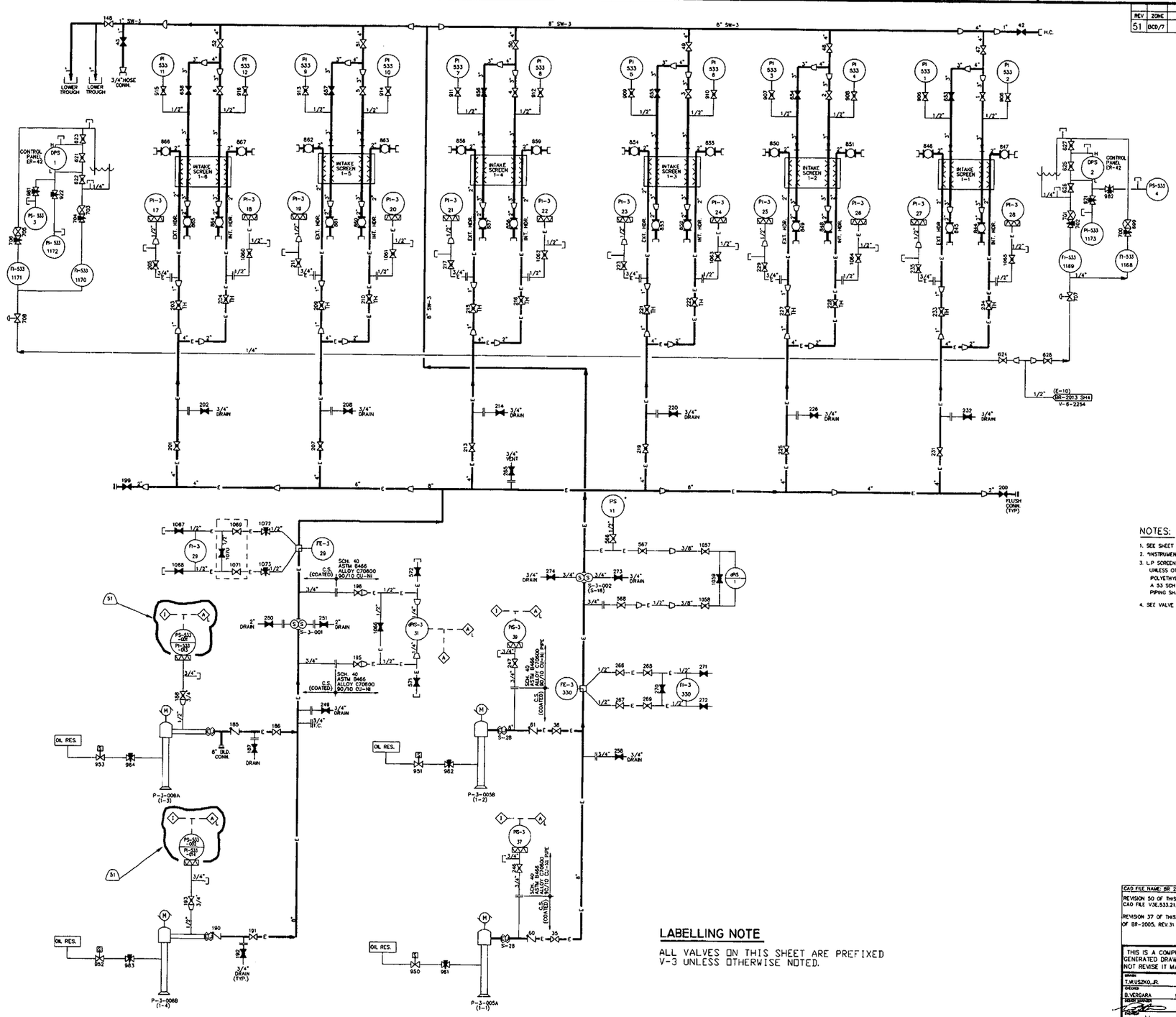

NOTES:

1. SEE SHEET 1 FOR NOTES AND REFERENCES.
2. *INSTRUMENTS FURNISHED BY CHAINBELT.
3. L.P. SCREEN WASH SYSTEM:
   UNLESS OTHERWISE NOTED,ALL PIPING SHALL BE C.S. COATED WITH POLYETHYLENE COATING. CARBON STEEL PIPE SHALL BE ASTM A106 GR.B OR A 53 SCH 40. DRAIN CONNECTIONS,INSTRUMENTATION TAPS & VENT CONNECTION PIPING SHALL BE CU-NI ASTM B 466 ALLOY NO C70600 SCH 40.
4. SEE VALVE LABELING NOTE.

LABELLING NOTE

ALL VALVES ON THIS SHEET ARE PREFIXED V-3 UNLESS OTHERWISE NOTED.

NO.	DWG. NO.	TITLE

REFERENCES

CAD FILE NAME: BR 2005 S5 R51

REVISION 50 OF THIS DRAWING WAS TRANSLATED TO AUTOCAD FROM CAD FILE V3C.533.21.0100.005-.5001

REVISION 37 OF THIS DRAWING WAS REDRAWN FROM 3D-505-21-001,REV.3.AND PART OF BR-2005, REV.31

THIS IS A COMPUTER GENERATED DRAWING DO NOT REVISE IT MANUALLY

DRAWN	T.W.USZKO,JR.	9/8/98
CHECKED	B.VERGARA	9/10/98
DESIGN ENGINEER		9/10/98
PROJECT ENGINEER	N/A	
PROJECT MANAGER	N/A	

GPU NUCLEAR

SCREEN WASH SYSTEM
FLOW DIAGRAM

OYSTER CREEK | DWG. NO. BR 2005 | SH. 5 OF 6 | REV. 51

SCALE : NONE

PIMS # N/A

DWG.NO. BR 2005 SH. 5 OF 6

REV	ZONE	REVISIONS DESCRIPTION
58	G-5	ECD C314576

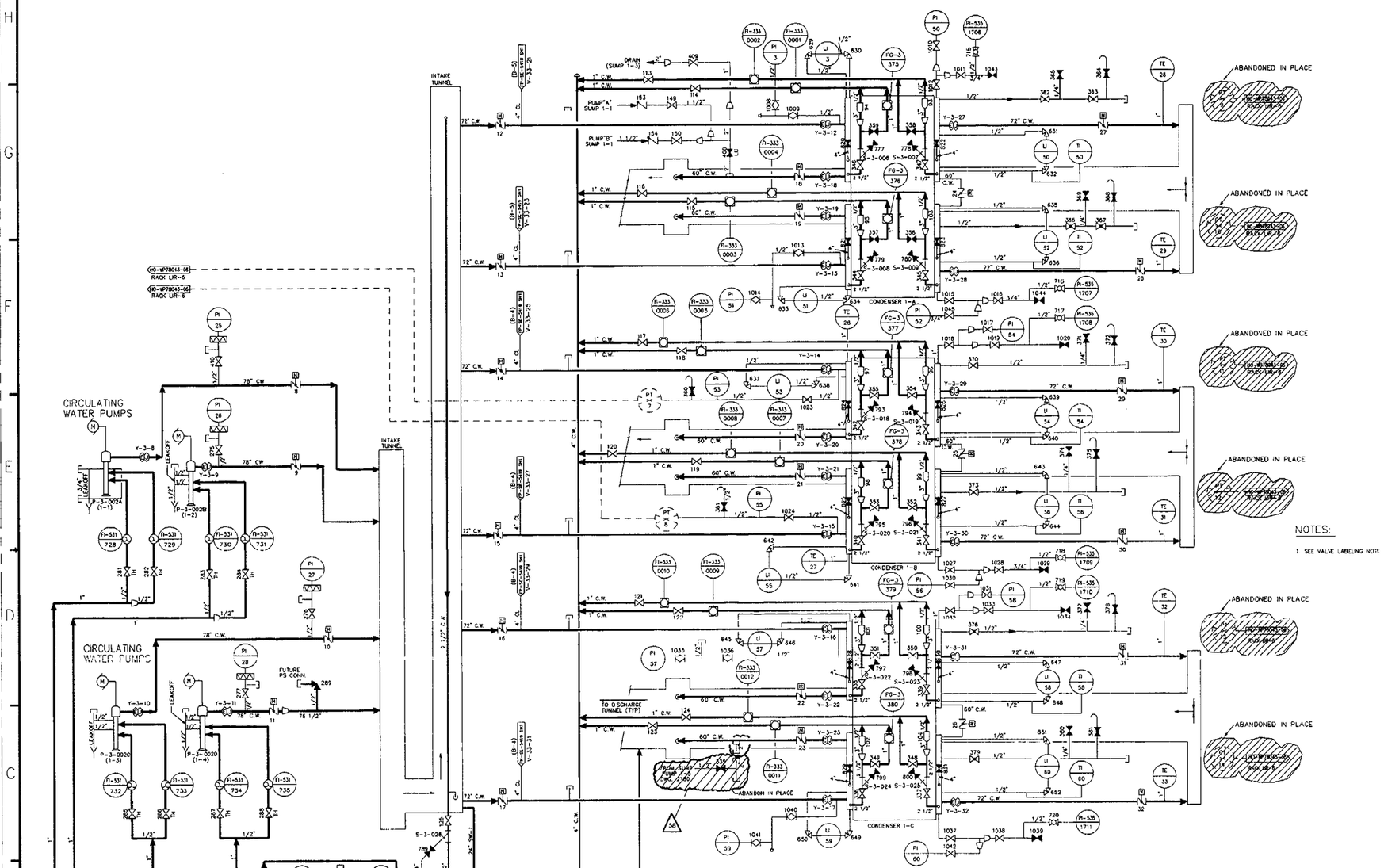

NOTES:

1. SEE VALVE LABELING NOTE

LABELING NOTE:

ALL VALVES ON THIS SHEET ARE PREFIXED V-3 UNLESS OTHERWISE NOTED.

NO.	DWG. NO.	TITLE
3.	BR 2001 SH3	MECHANICAL DRAWING INDEX
2.	BR 2001 SH2	ABBREVIATIONS
1.	BR 2001 SH1	MECHANICAL SYMBOLS

REFERENCES

CAD FILE NAME: BR 2005 S6 R58

REVISION 54 OF THIS DRAWING WAS TRANSLATED TO AUTOCAD FROM CAD FILE V3E,535,21,0100,006-.54CP

REVISION 37 OF THIS DRAWING WAS REDRAWN FROM PART OF BR 2005 REV.31

THIS IS A COMPUTER GENERATED DRAWING DO NOT REVISE IT MANUALLY

DRAWN N.CARLSON 11/03/00
CHECKED D.ABBRUSCATO 11/03/00
ENGINEERING APPROVAL 11/8/99
ENGINEERING REVIEW N/A
INTERNAL CONCURRENCE N/A

AmerGen

CIRCULATING WATER SYSTEM

FLOW DIAGRAM

OYSTER CREEK | DWG. NO. BR 2005 | SH. 6 OF 6 | REV. 58

SCALE : NONE

PIMS # N/A

DWG NO. BR 2005 SH. 6 OF 6

REVISIONS		
REV	ZONE	DESCRIPTION
72	ALL	ISI BOUNDARY INFO INCORPORATED

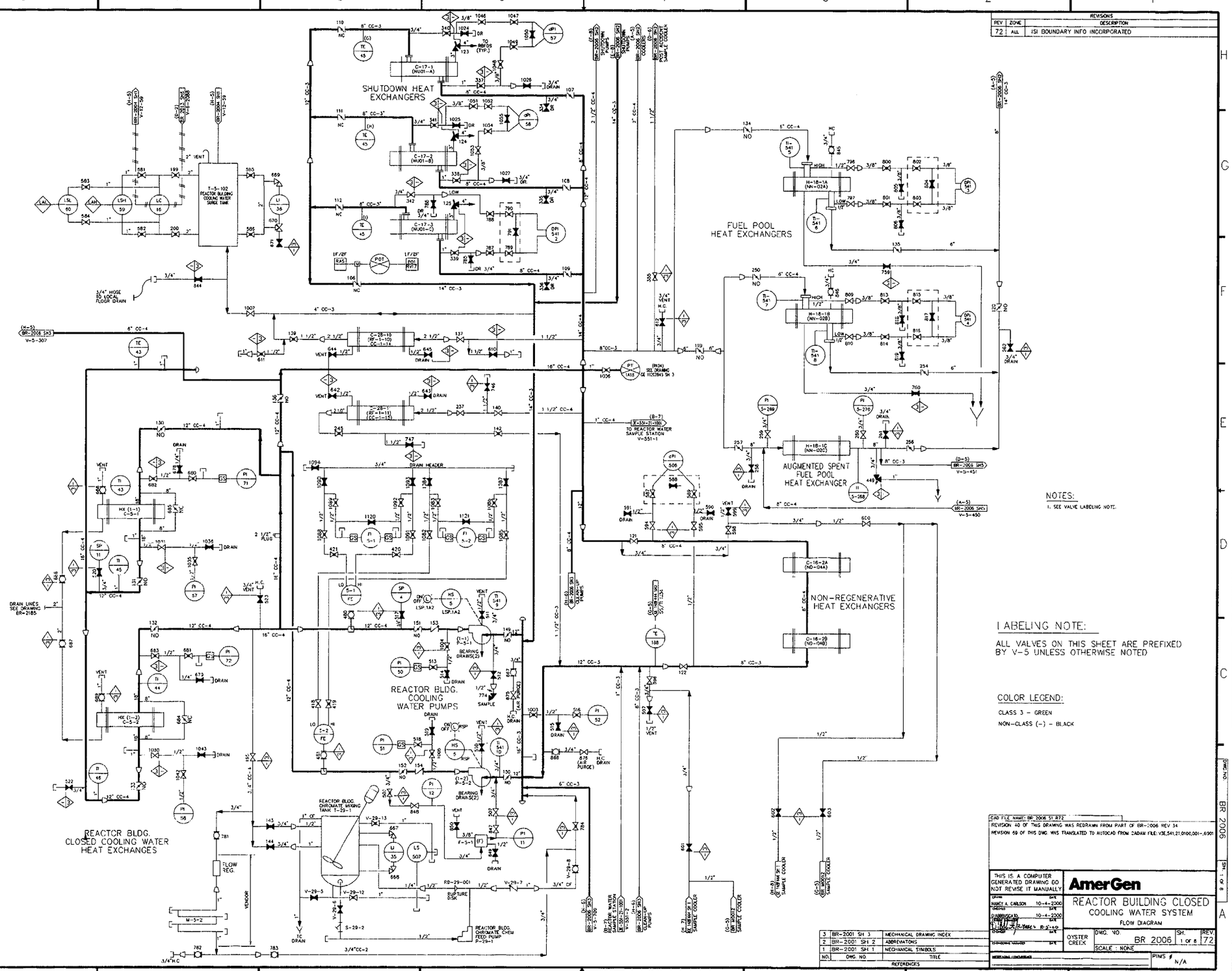

NOTES:

1. SEE VALVE LABELING NOTE.

LABELING NOTE:

ALL VALVES ON THIS SHEET ARE PREFIXED BY V-5 UNLESS OTHERWISE NOTED

COLOR LEGEND:

CLASS 3 - GREEN

NON-CLASS (-) - BLACK

NO.	DWG. NO	TITLE
3	BR-2001 SH 3	MECHANICAL DRAWING INDEX
2	BR-2001 SH 2	ABBREVIATIONS
1	BR-2001 SH 1	MECHANICAL SYMBOLS

REFERENCES

CAD FILE NAME: BR 2006 S1.R72

REVISION 40 OF THIS DRAWING WAS REDRAWN FROM PART OF BR-2006 REV 34

REVISION 59 OF THIS DWG. WAS TRANSLATED TO AUTOCAD FROM CADAM FILE: V3E,541,21,0100,001-,6901

THIS IS A COMPUTER GENERATED DRAWING DO NOT REVISE IT MANUALLY

DRAWN		DATE
NANCY A. CARLSON	10-4-2000	DATE
CHECKED		DATE
ENGINEERING APPROVED	10-4-2000	DATE
CHECKED		DATE
TECHNICAL REVIEW		DATE

AmerGen

REACTOR BUILDING CLOSED COOLING WATER SYSTEM

FLOW DIAGRAM

OYSTER CREEK

DWG. NO. BR 2006 | SH. 1 of 8 | REV. 72

SCALE : NONE

PIMS # N/A

DWG NO. BR 2006 SH 1 of 8

REVISIONS		
REV.	ZONE	DESCRIPTION
44	ALL	ISI BOUNDARY INFO INCORPORATED

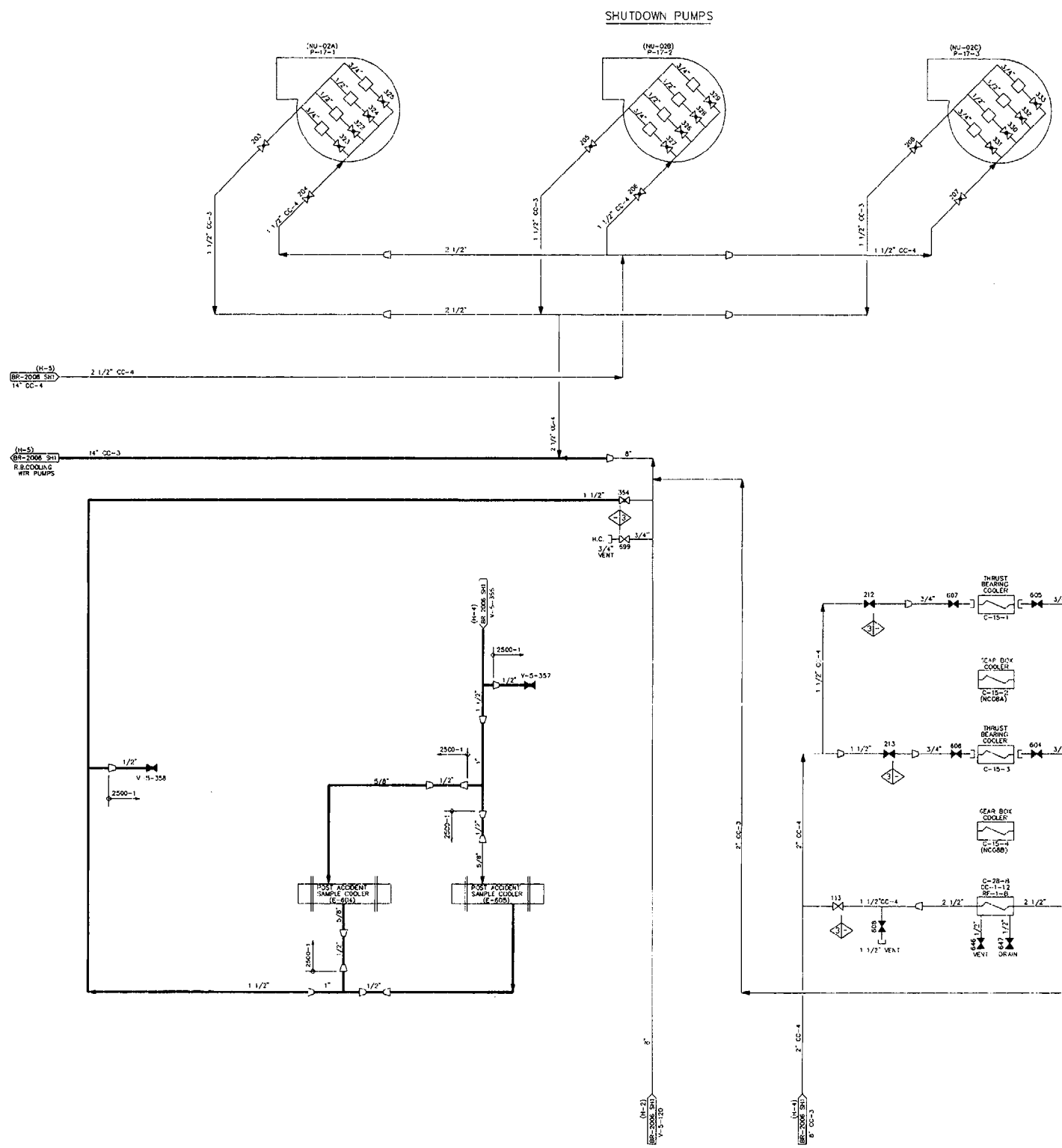

NOTES

1. SEE SHEET 1 FOR NOTES AND REFERENCES.

COLOR LEGEND:

CLASS 3 - GREEN
NON-CLASS (--) - BLACK

LABELING NOTE:

ALL VALVES ON THIS SHEET ARE PREFIXED BY V-5 UNLESS OTHERWISE NOTED

CAD FILE NAME: BR 2006 S2 R44
REVISION 40 OF THIS DRAWING WAS REDRAWN FROM PART OF BR-2006 REV 34 AND PART OF BR-M0012 REV 14
REVISION 43 OF THIS DWG WAS TRANSLATED TO AUTOCAD FROM CADAM FILE:V3E.541.21.0100.002-.4301

THIS IS A COMPUTER GENERATED DRAWING DO NOT REVISE IT MANUALLY

		DATE
DRAWN	NANCY A. CARLSON	9-18-00
CHECKED	NANCY A. CARLSON	9-23-00
REVIEWED BY		
CHARGE		DATE
TECHNICAL VALIDITY		DATE

AmerGen

REACTOR BUILDING CLOSED COOLING WATER SYSTEM
FLOW DIAGRAM

OYSTER CREEK | DWG. NO. BR 2006 | SH. 2 of 8 | REV. 44
SCALE - NONE

NO.	DWG. NO.	TITLE
REFERENCES		

OPERATING CONTROL | PIMS # N/A

DWG NO BR 2006 SH 2 of 8

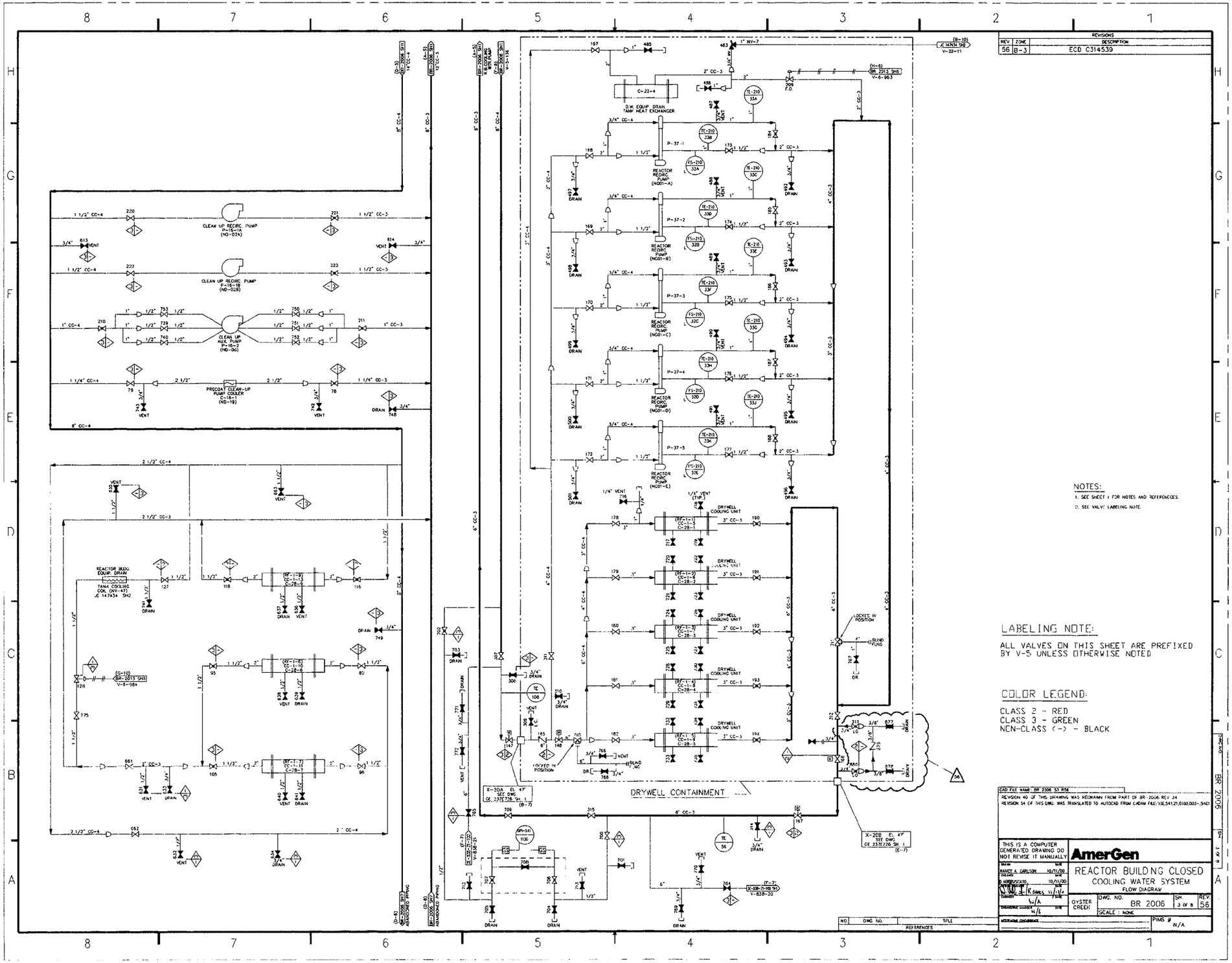
CLEAN UP RECIRC. PUMP P-16-1A (NO-024)
CLEAN UP RECIRC. PUMP P-16-1B (NO-028)
CLEAN UP AUX. PUMP P-16-2 (NO-06)
PRECOAT CLEAN-UP PUMP COOLER C-16-1 (NO-19)
REACTOR BLDG. EQUIP. DRAIN TANK COOLING COIL (NV-47) JC 147434 SH2
D.W. EQUIP DRAIN TANK HEAT EXCHANGER
REACTOR RECIRC. PUMP (NG01-A)
REACTOR RECIRC. PUMP (NG01-B)
REACTOR RECIRC. PUMP (NG01-C)
REACTOR RECIRC. PUMP (NG01-D)
REACTOR RECIRC. PUMP (NG01-E)
DRYWELL COOLING UNIT
DRYWELL CONTAINMENT
LOCKED IN POSITION
BLIND FLNG
NOTES:
1. SEE SHEET 1 FOR NOTES AND REFERENCES.
2. SEE VALVE LABELING NOTE.
LABELING NOTE:
ALL VALVES ON THIS SHEET ARE PREFIXED BY V-5 UNLESS OTHERWISE NOTED
COLOR LEGEND:
CLASS 2 - RED
CLASS 3 - GREEN
NON-CLASS (-) - BLACK
REVISIONS
REV ZONE DESCRIPTION
56 B-3 ECO C314539
CAD FILE NAME: BR 2006 S1 R56
REVISION 40 OF THIS DRAWING WAS REDRAWN FROM PART OF BR-2006-REV 34
REVISION 54 OF THIS DWG. WAS TRANSLATED TO AUTOCAD FROM CADAM FILE: V3E,541,21,0100,003-,5461
THIS IS A COMPUTER GENERATED DRAWING DO NOT REVISE IT MANUALLY
NANCY A. CARLSON 10/11/00
R. ABBRUSCATO 10/11/00
K. DANIELS 11/1/00
N/A
N/A
AmerGen
REACTOR BUILDING CLOSED COOLING WATER SYSTEM
FLOW DIAGRAM
OYSTER CREEK
DWG. NO. BR 2006
SH. 3 OF 8
REV. 56
SCALE : NONE
PIMS # N/A
NO. DWG. NO. TITLE
REFERENCES

REVISIONS		
REV	ZONE	DESCRIPTION
63	D-7	ECD C307478

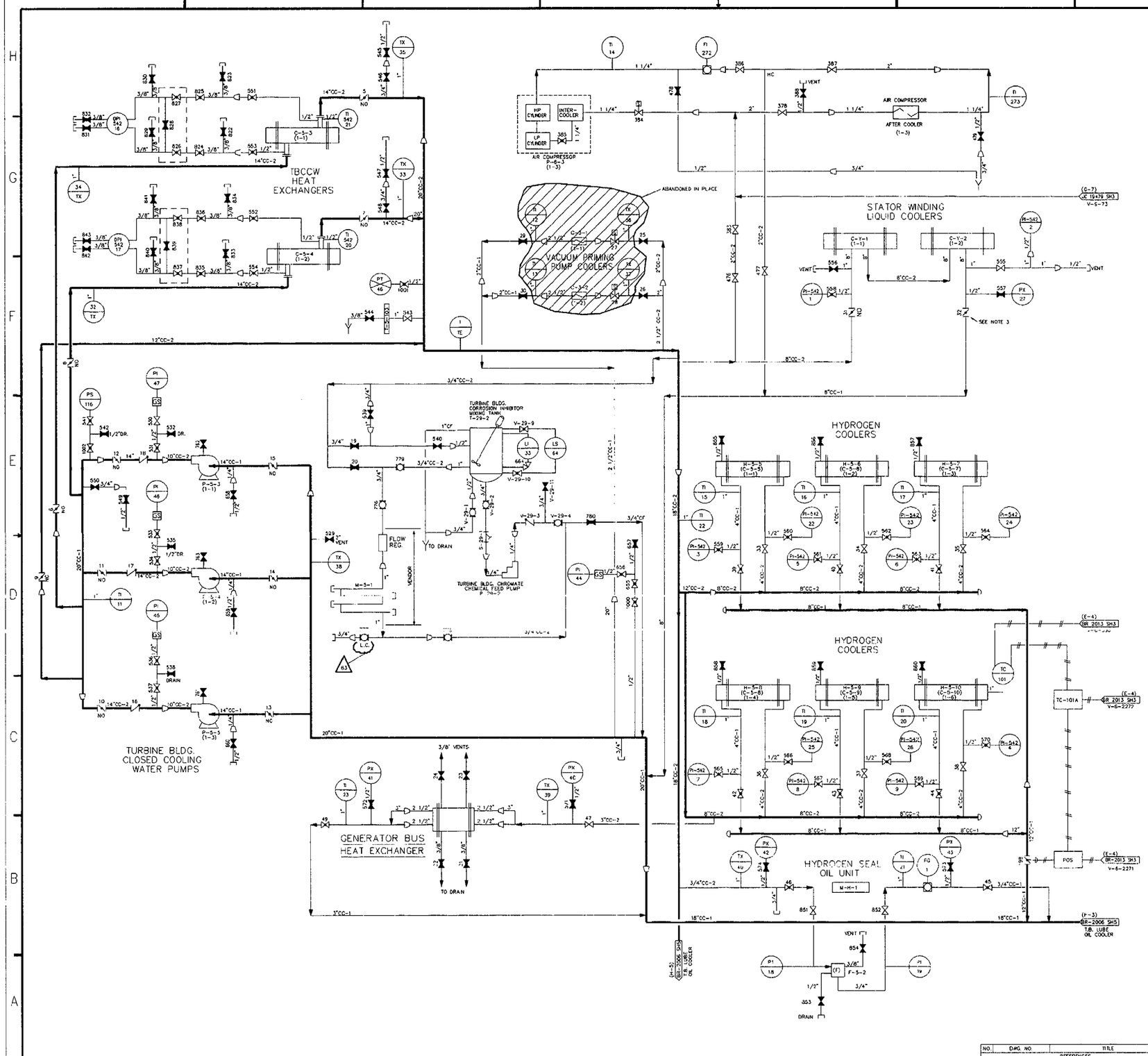

LABELING NOTE:

ALL VALVES ON THIS SHEET ARE PREFIXED BY V-5 UNLESS OTHERWISE NOTED

NOTES:

1. SEE SHEET 1 FOR NOTES AND REFERENCES.
2. SEE VALVE LABELING NOTE.
3. V-5-32(F4) IS CLOSED OR THOTTLED PER PROCEDURE 336.4

CAD FILE NAME: BR 2006 S4 R63

REVISION 60 OF THIS DRAWING WAS TRANSLATED TO AUTOCAD FROM CADAM FILE: V3E,542,21,0100,024--GC01

THIS IS A COMPUTER GENERATED DRAWING DO NOT REVISE IT MANUALLY

DRAWN	DATE
NANCY A. CARLSON	02/08/01
CHECKED	DATE
D. ARRUGCATO	02/08/01
PROJ. ENGINEER	DATE
	2/15/01
ENG. MANAGER	DATE
ENG. SERVICES MANAGER	DATE

AmerGen

TURBINE BUILDING CLOSED COOLING WATER SYSTEM

FLOW DIAGRAM

OYSTER CREEK	DWG. NO. BR 2006	SH. 4 OF 8	REV. 63
	SCALE : NONE		

NO.	DWG. NO.	TITLE
REFERENCES		

DISCREPANCY CONCURRENCE

PIMS # N/A

BR 2006 SH 4 OF 8

REVISIONS		
REV.	ZONE	DESCRIPTION
55	D-3,4	ECO C308201

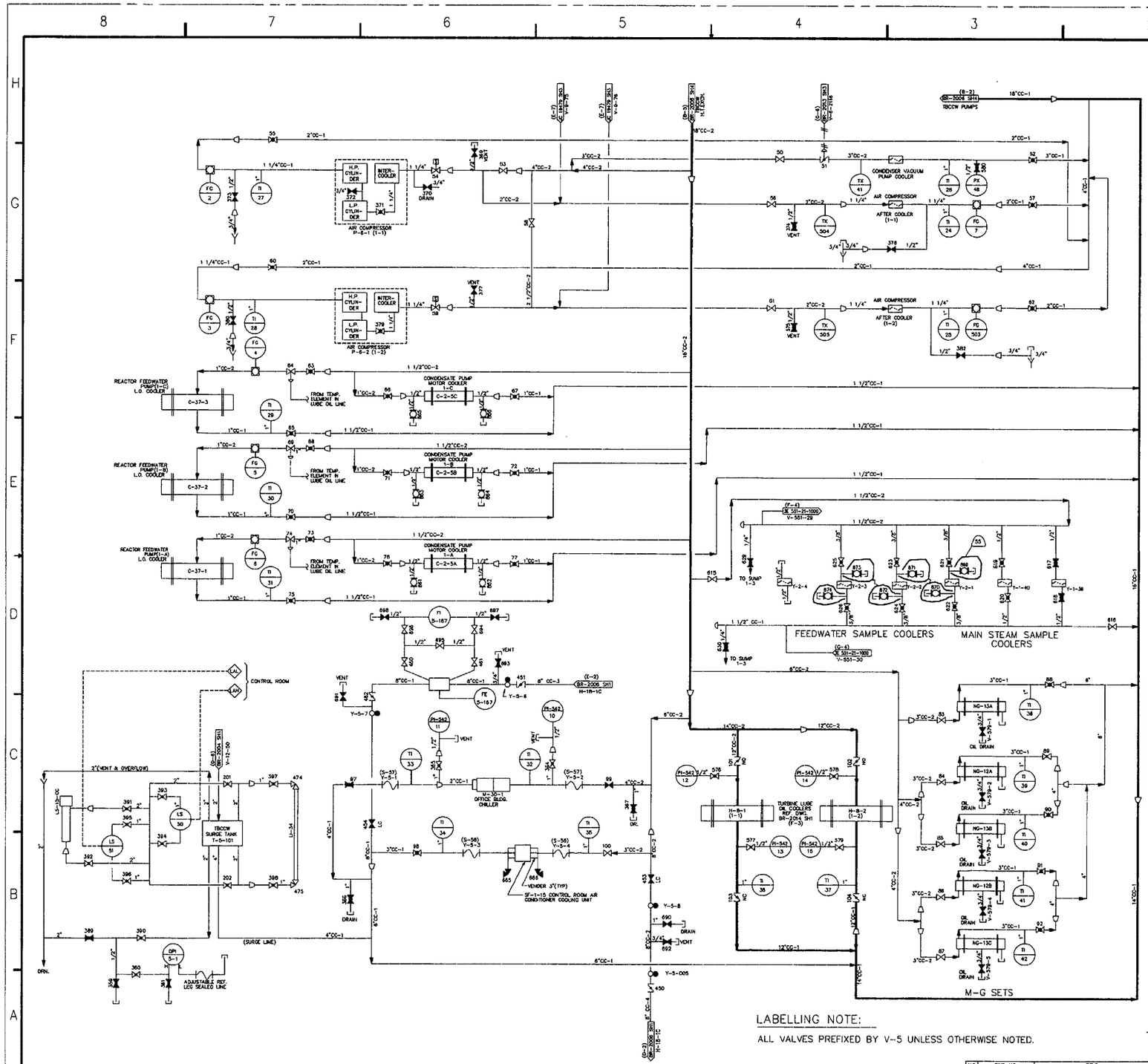

NOTES:

1. SEE SHEET 1 FOR NOTES AND REFERENCES.

LABELLING NOTE:

ALL VALVES PREFIXED BY V-5 UNLESS OTHERWISE NOTED.

NO.	DWG. NO.	TITLE
		REFERENCES

CAD FILE NAME: BR 2006 S5 R53

REVISION 40 OF THIS DRAWING WAS REDRAWN FROM PART OF BR-2006 REV 34

REVISION 54 OF THIS DWG. WAS TRANSLATED TO AUTOCAD FROM CADAM FILE:VOL342.21.0100.005-.5401

THIS IS A COMPUTER GENERATED DRAWING DO NOT REVISE IT MANUALLY

DRAWN NANCY A. CARLSON 6-26-2000

DESIGNED G.ABRUSCATO 9-28-2000

CHECKED 7/11/08

SUPERVISING ENGINEER N/A

SUPERVISING ENGINEER N/A

GPU NUCLEAR

TURBINE BUILDING CLOSED COOLING WATER SYSTEM

FLOW DIAGRAM

OYSTER CREEK | DWG. NO. BR 2006 | SH. 5 OF 8 | REV. 55

SCALE : NONE

PIMS # N/A

DWG.NO. BR 2006 SH. 5 OF 8

REVISIONS		
REV	ZONE	DESCRIPTION
50	H-4	ECD C315102

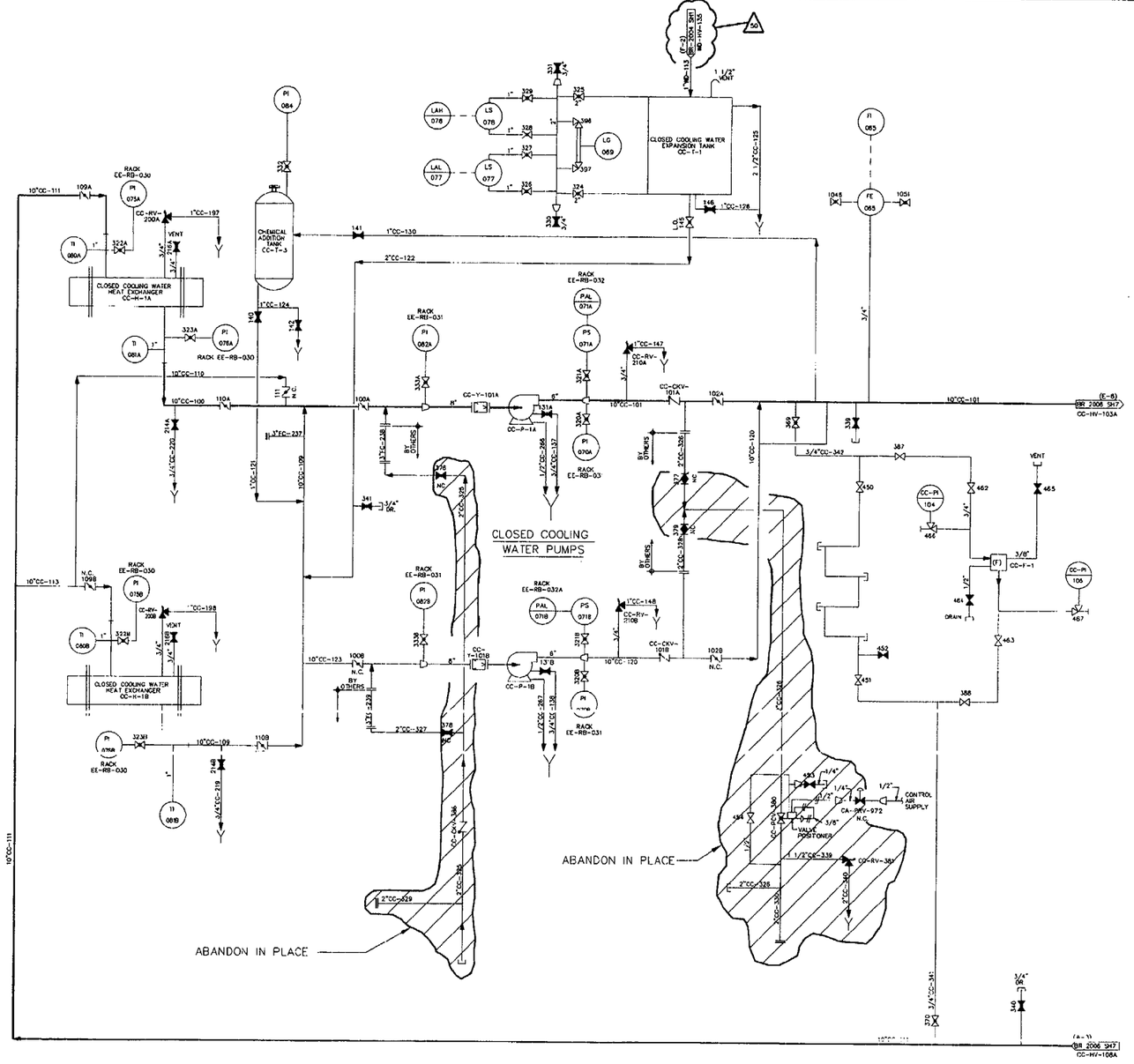

NOTES:

1. ALL VALVES ON THIS SHEET ARE PREFIXED CC-HV UNLESS OTHERWISE NOTED.
2. UNLESS OTHERWISE SPECIFIED, ALL PRESSURE & FLOW INSTRUMENTATION ROOT VALVES SHALL BE 3/4" GLOBE.
3. ALL COOLING WATER PIPING IN ACCORDANCE WITH LINE SPEC 150-10 EXCEPT AS NOTED.
4. ALL RELIEF VALVE DISCHARGES AND EQUIPMENT DRAINS TO FLOOR DRAIN SYSTEM, UNLESS OTHERWISE NOTED.
5. FOR INSTRUMENTATION DETAILS SEE DWG. OU 3E-STO-40-1000.

REVISION 47 OF THIS DRAWING WAS TRANSLATED TO AUTOCAD FROM CADAM FILE: VSC543.21.0100.006-.4701

REVISION 40 OF THIS DRAWING WAS REDRAWN FROM PART OF BR-M610 REV 17 AND PART OF BR-M612 REV 25

QUALITY LEVEL 3
SEISMIC CATEGORY II
CLEANLINESS D

THIS IS A COMPUTER GENERATED DRAWING DO NOT REVISE IT MANUALLY

AmerGen

DRAWN NANCY A. CARLSON 08/30/00
CHECKED R. ABBRUSCATO 08/30/00
APPROVED

RADWASTE CLOSED COOLING WATER SYSTEM
FLOW DIAGRAM

OYSTER CREEK | DWG. NO. BR 2006 | SH. 6 OF 8 | REV. 50
SCALE : NONE | NONE

PIMS # N/A

NO	DWG. NO.	TITLE
		REFERENCES

REVISIONS		
REV	ZONE	DESCRIPTION
49	B-3 C-2 D-6 E-4	ECD 0312244

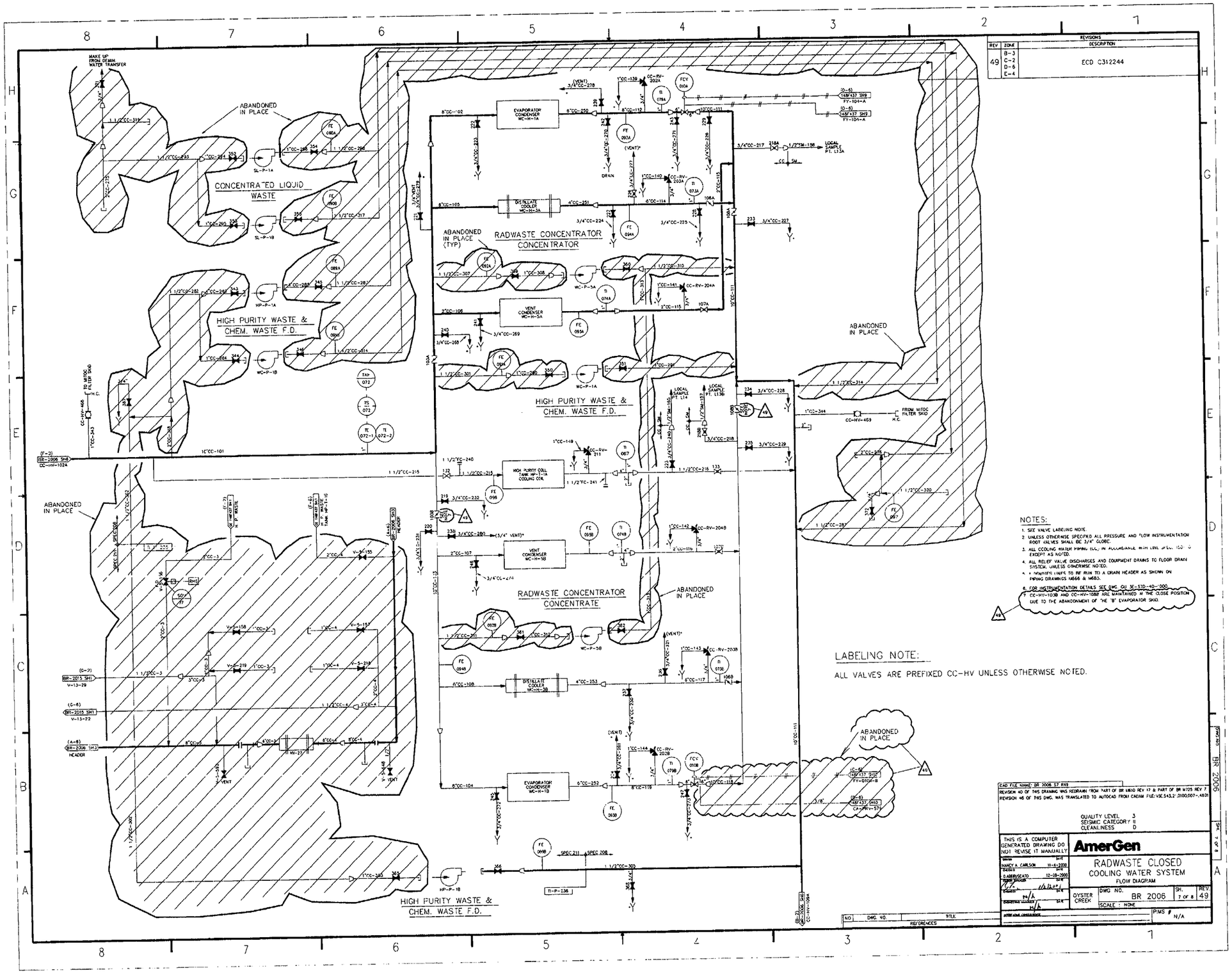

REVISIONS		
REV	ZONE	DESCRIPTION
49	D-2	ECO C315013

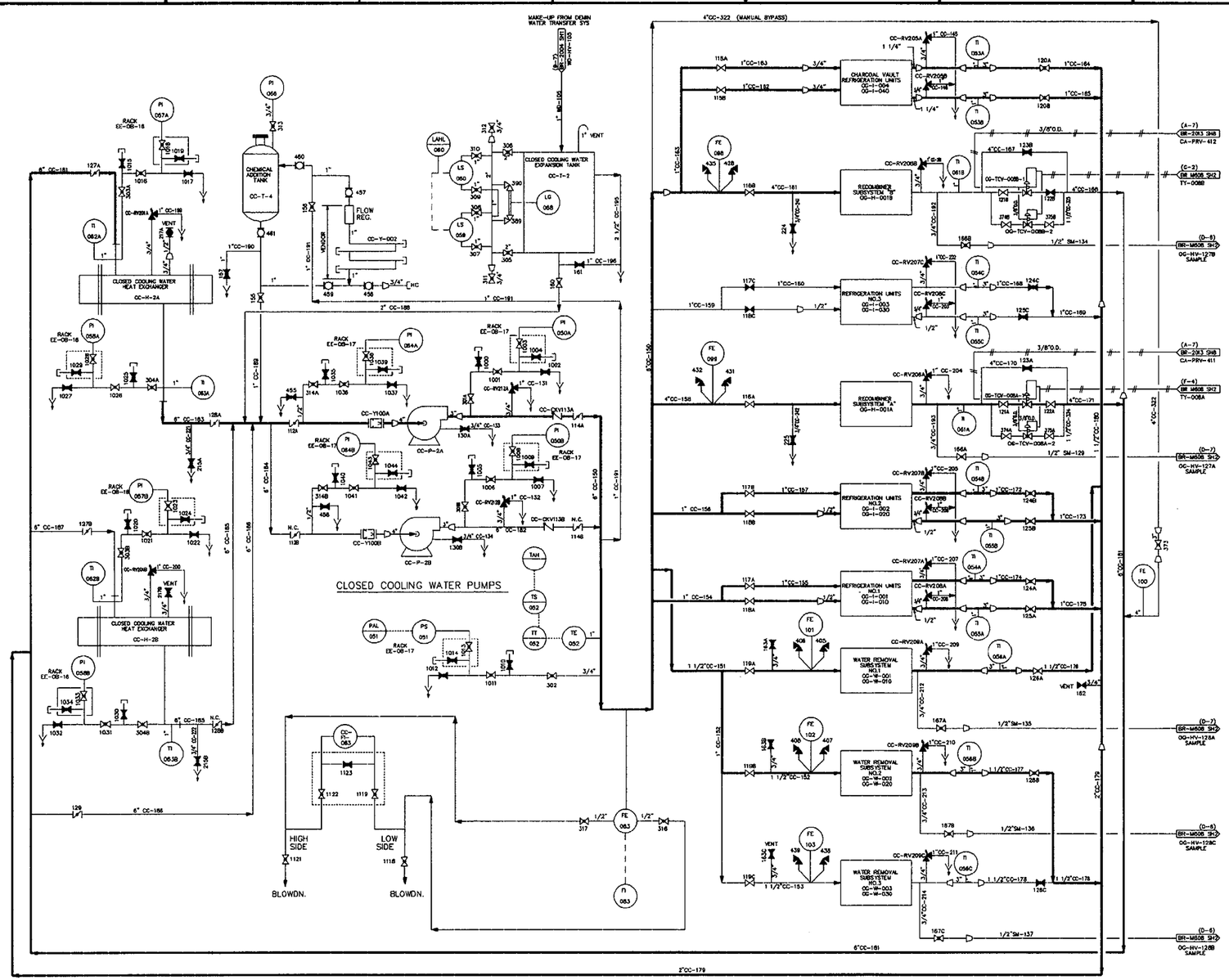

NOTES:

1. ALL VALVES ON THIS SHEET ARE PREFIXED CC-HV UNLESS OTHERWISE NOTED.
2. UNLESS OTHERWISE SPECIFIED ALL PRESSURE AND FLOW INSTRUMENTATION ROOT VALVES SHALL BE 3/4" GLOBE.
3. ALL COOLING WATER PIPING (CC) IN ACCORDANCE WITH UNE SPEC. 150-10 EXCEPT AS NOTED.
4. ALL RELIEF VALVE DISCHARGES AND EQUIPMENT DRAINS TO FLOOR DRAIN SYSTEM, UNLESS OTHERWISE NOTED.
5. INSTRUMENT PIPING, SAMPLING PIPING AND INSTRUMENTATION SHOWN SHALL HAVE THE SAME PIPING SYSTEM PREFIX DESIGNATION AS THE PIPING TO WHICH IT IS ATTACHED.
6. ALL COMPONENTS BEING COOLED SHALL BE PROVIDED WITH ONE VALVE ON VENT AND DRAIN CONNECTIONS. VALVES SHALL HAVE SAME PIPE SYSTEM CLASSIFICATION AS COMPONENT.
7. FOR INSTRUMENTATION DETAILS SEE DWG. GU JE-STD-40-1000.

49

CAD FILE NAME: BR 2006 S8 R46
REVISION 40 OF THIS DRAWING WAS REDRAWN FROM PART OF BR-M810 REV 17
REVISION 48 OF THIS DRAWING WAS TRANSLATED TO AUTOCAD FROM CADAM FILE:VOE,544,31,0100,008-,4801

QUALITY LEVEL 3
SEISMIC CATEGORY II
CLEANLINESS D

THIS IS A COMPUTER GENERATED DRAWING DO NOT REVISE IT MANUALLY

GPU NUCLEAR

DRAWN: NANCY A. CARLSON	DATE 7-31-2000	AUGMENTED OFFGAS CLOSED COOLING WATER SYSTEM FLOW DIAGRAM
CHECKED: D.LEWIS-CRATO	DATE 7-31-2000	
OYSTER CREEK	DWG. NO. 2006	SH. 8 OF 8 REV. 49
	SCALE : NONE	PIMS # N/A

NO.	DWG. NO.	TITLE
REFERENCES		

BR 2006

REVISIONS		
REV	ZONE	DESCRIPTION
25	F-8 D-7	ECDC314558

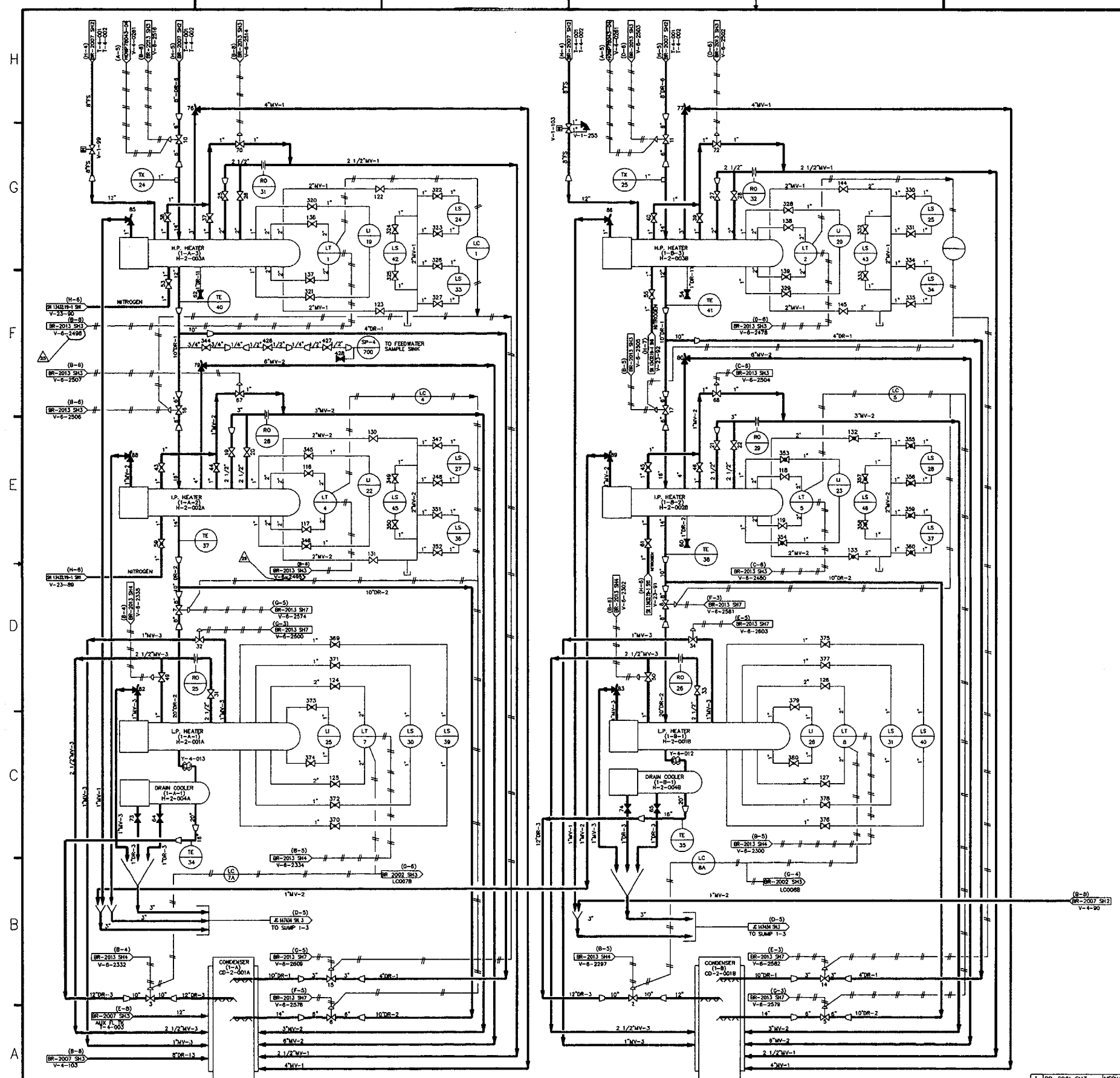

NOTES:

1. VALVES ARE PREFIXED BY V-4 UNLESS OTHERWISE NOTED.
2. ALL 8" VALVES FROM REHEATER DRAIN TANKS TO ALL FLASH TANKS WILL HAVE 40% RESTRICTED PLUGS.
3. FOR REHEATER PROTECTION DIAGRAM SEE DWG. 713E827
4. FOR MOISTURE REMOVAL DIAGRAM SEE DWG. 713E806
5. FOR OUTLINE DRAIN TANK ASSEMBLY SEE DWG. 105C6162 & 605E548
6. VALVES V-4-108 AND 109 OPEN ON HIGH ALARM
7. FOR OUTLINE DIAPHRAGM ACTUATED CONTROL VALVE SEE DWG. 182A5248
8. DRAIN TANKS (1-2) T-4-007 AND (1-5) T-4-010 WERE WITHDRAWN FROM SERVICE AND REPLACED WITH MOISTURE SEPARATOR DRAIN TANKS (1-2) T-4-012 AND (1-5) T-4-013. SEE REV. 9

NO.	DWG NO.	TITLE
3	BR-2001 SH3	MECHANICAL DRAWING INDEX
2	BR-2001 SH2	ABBREVIATIONS
1	BR-2001 SH1	MECHANICAL SYMBOLS

REFERENCES

CAD FILE NAME: BR 2007 SH 025

REVISION 23 OF THIS DRAWING WAS TRANSLATED TO AUTOCAD FROM CADAM FILE:V3E,431,21,0100,001-2301

REVISION 12 OF THIS DRAWING WAS REDRAWN FROM PART OF BR 2007, REV. 9, AND PART OF BR 2002, REV. 36.

THIS IS A COMPUTER GENERATED DRAWING DO NOT REVISE IT MANUALLY

GPU NUCLEAR

DRAWN	NANCY A. CARLSON	4-10-00
CHECKED	D. ABRUSCATO	4-11-00
PROJECT ENGINEER		4-26-00
SUPERVISING ENGINEER	N/A	
MECHANICAL SYSTEMS	N/A	

HEATER DRAIN, VENT AND PRESSURE RELIEF SYSTEMS

FLOW DIAGRAM

OYSTER CREEK

DWG. NO. BR 2007

SH. 1 OF 4

REV. 25

SCALE : NONE

NONE

PIMS # N/A

DWG/RO BR 2007 SH 1 OF 4

REVISIONS		
REV	ZONE	DESCRIPTION
29	D-3,4	ECO C314548

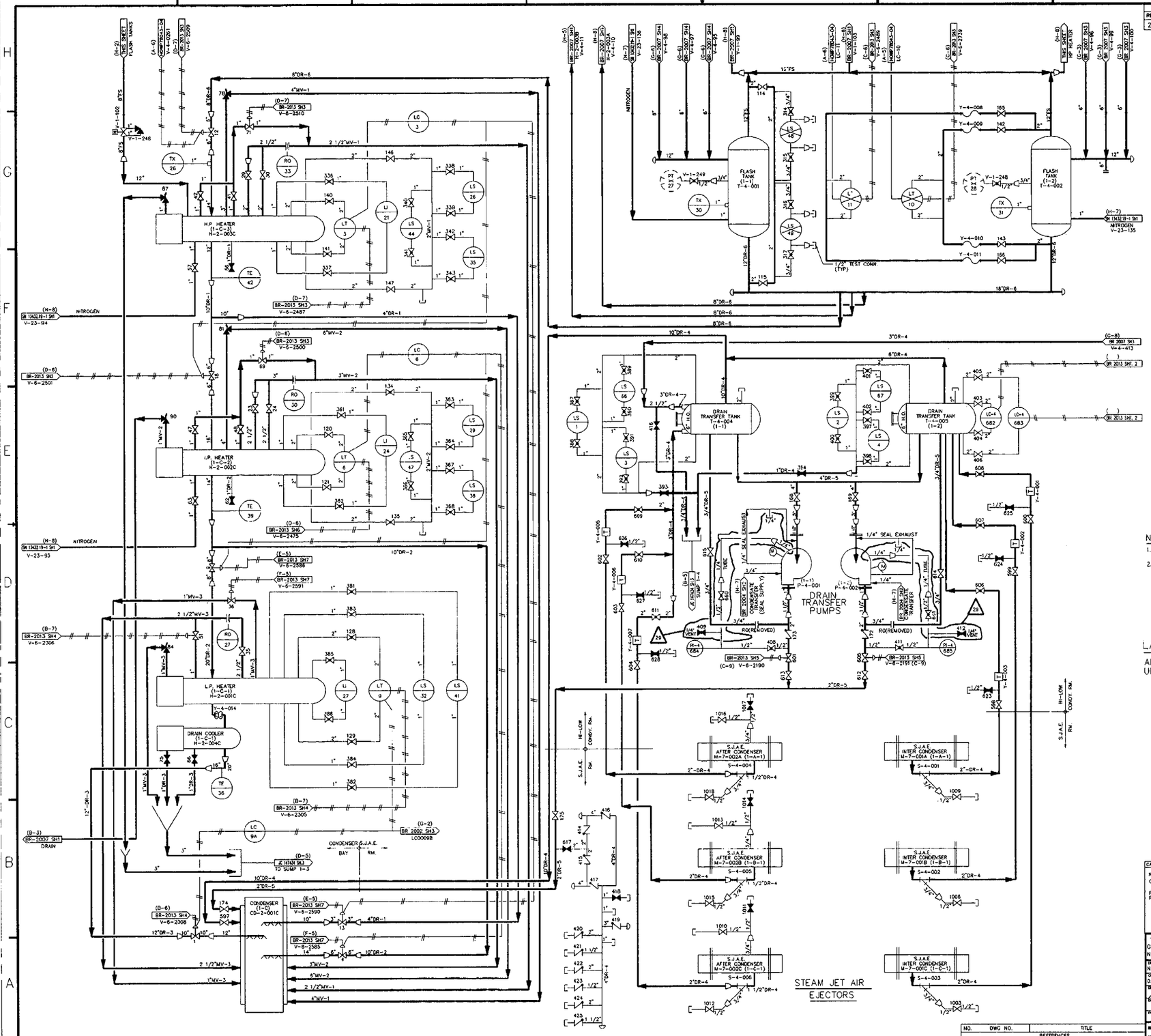

NOTES:

1. SEE SHEET 1 FOR NOTES AND REFERENCES.
2. SEE VALVE LABELING NOTE.

LABELING NOTE:

ALL VALVES ARE PREFIXED BY V-4 UNLESS OTHERWISE NOTED.

CAD FILE NAME: BR 2007 S2 R29

REVISION 26 OF THIS DRAWING WAS TRANSLATED TO AUTOCAD FROM CAD FILE. V3E.431.21.0100.002-.260P

REVISION 12 OF THIS DRAWING WAS REDRAWN FROM PART OF BR-2007, REV. 9, AND PART OF BR-2002,REV. 35.

THIS IS A COMPUTER GENERATED DRAWING DO NOT REVISE IT MANUALLY

DRAWN	N.CARLSON	09/26/00
CHECKED	D.ABBRUSCATO	09/26/00
DESIGN ENGINEER		
CHIEF ENGINEER		
ENGINEERING MANAGER		

AmerGen

HEATER DRAIN, VENT AND PRESSURE RELIEF SYSTEMS

FLOW DIAGRAM

OYSTER CREEK

DWG. NO. BR 2007 | SH. 2 OF 4 | REV. 29

SCALE : NONE

INTERFACING CONTRACTOR

PIMS # N/A

NO.	DWG NO.	TITLE
REFERENCES		

DWG NO. BR 2007 SH. 2 OF 4

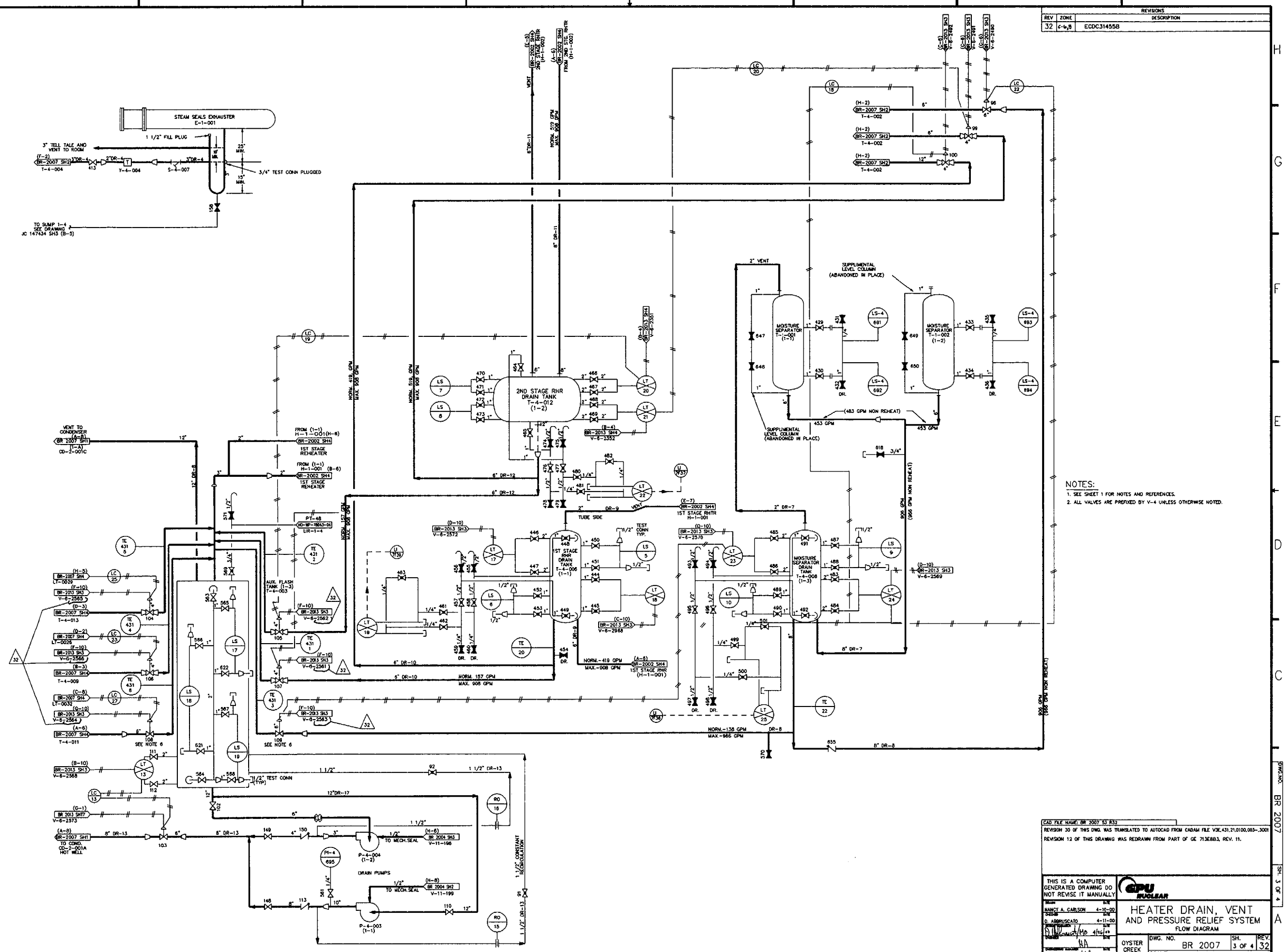
STEAM SEALS EXHAUSTER
E-1-001
1 1/2" FILL PLUG
3" TELL TALE AND VENT TO ROOM
3/4" TEST CONN PLUGGED
TO SUMP 1-4
SEE DRAWING
JC 147434 SH3 (B-5)
2ND STAGE RHR DRAIN TANK
T-4-012
(1-2)
MOISTURE SEPARATOR
T-1-001
(1-1)
MOISTURE SEPARATOR
T-1-002
(1-2)
SUPPLIMENTAL LEVEL COLUMN (ABANDONED IN PLACE)
(483 GPM NON REHEAT)
453 GPM
VENT TO CONDENSER
CD-2-001C
1ST STAGE REHEATER
TUBE SIDE
1ST STAGE RHR DRAIN TANK
T-4-006
(1-1)
MOISTURE SEPARATOR DRAIN TANK
T-4-008
(1-3)
AUX. FLASH TANK (1-3)
T-1-003
TEST CONN
DRAIN PUMPS
TO MECH. SEAL
P-4-004
(1-2)
P-4-003
(1-1)
TO COND
CD-2-001A
HOT WELL
1 1/2" CONSTANT RECIRCULATION
NORM.-157 GPM
MAX. 905 GPM
NORM.-419 GPM
MAX.-908 GPM
NORM.-138 GPM
MAX.-966 GPM
NORM. 419 GPM
MAX. 908 GPM
NORM. 518 GPM
MAX. 908 GPM
NORM. 157 GPM
MAX. 905 GPM
906 GPM
(966 GPM NON REHEAT)
NOTES:
1. SEE SHEET 1 FOR NOTES AND REFERENCES.
2. ALL VALVES ARE PREFIXED BY V-4 UNLESS OTHERWISE NOTED.
REVISIONS
REV ZONE DESCRIPTION
32 C-6,8 ECDC314558
CAD FILE NAME: BR 2007 S3 R32
REVISION 30 OF THIS DWG. WAS TRANSLATED TO AUTOCAD FROM CADAM FILE V3E.431.21.0100.003-.3001
REVISION 12 OF THIS DRAWING WAS REDRAWN FROM PART OF GE 713E883, REV. 11.
THIS IS A COMPUTER GENERATED DRAWING DO NOT REVISE IT MANUALLY
NANCY A. CARLSON 4-10-00
D. ABBRUSCATO 4-11-00
GPU NUCLEAR
HEATER DRAIN, VENT AND PRESSURE RELIEF SYSTEM
FLOW DIAGRAM
OYSTER CREEK
DWG. NO. BR 2007
SH. 3 OF 4
REV. 32
SCALE : NONE
PIMS # N/A
NO. DWG. NO. TITLE
REFERENCES
DWG. NO. BR 2007
SH. 3 OF 4

REVISIONS		
REV	ZONE	DESCRIPTION
23	H-4,7	ECDC314558

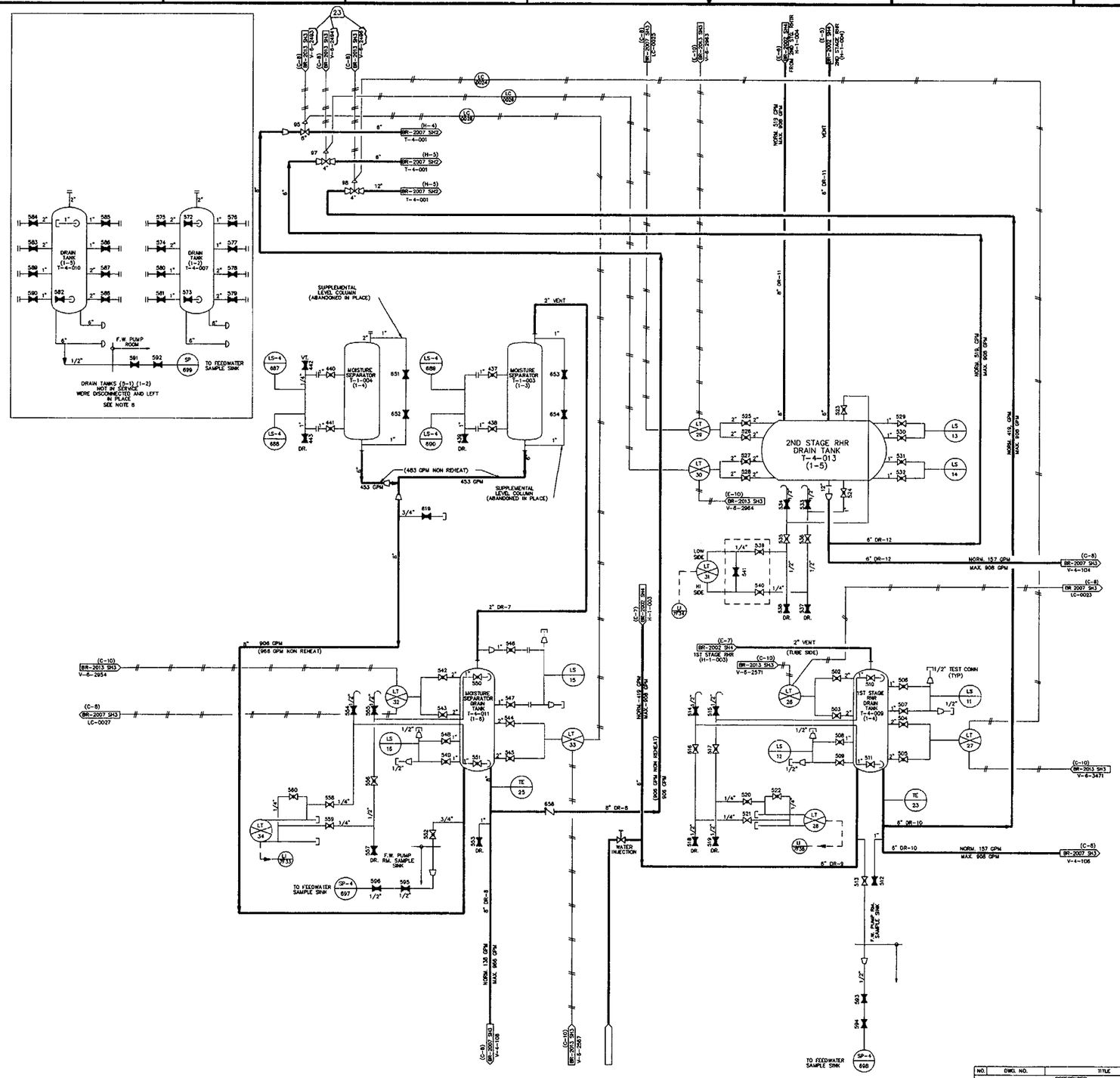

REVISIONS		
REV	ZONE	DESCRIPTION
40	B-5,6,8	ECO C400404

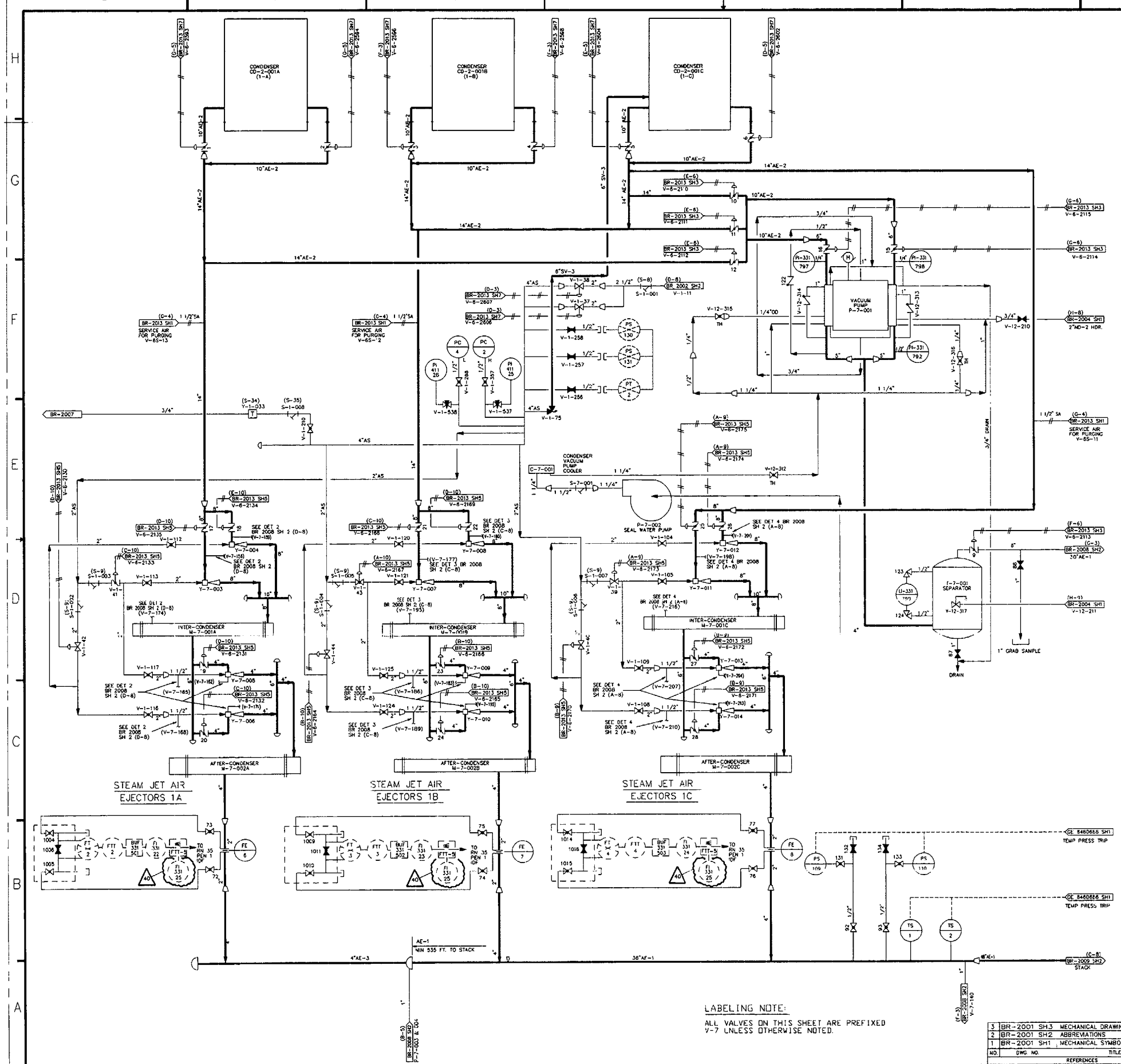

NOTES:

1. SEE VALVE LABELING NOTE.

LABELING NOTE:

ALL VALVES ON THIS SHEET ARE PREFIXED V-7 UNLESS OTHERWISE NOTED.

NO.	DWG NO.	TITLE
3	BR-2001 SH.3	MECHANICAL DRAWING INDEX
2	BR-2001 SH2	ABBREVIATIONS
1	BR-2001 SH1	MECHANICAL SYMBOLS

REFERENCES

CAD FILE NAME: BR 2008 S1 R40

REVISION 24 OF THIS DRAWING WAS REDRAWN FROM PART OF BR-2008, REV 17 AND PART OF BR-2002, REV. 35.

REVISION 37 OF THIS DRAWING WAS TRANSLATED TO AUTOCAD FROM CADAM FILE V3E,332,21,0100,001-,370P

THIS IS A COMPUTER GENERATED DRAWING DO NOT REVISE IT MANUALLY

DRAWN: NANCY A. CARLSON 12/20/00

CHECKED: R. ABBRUSCATO 12/20/00

AmerGen

AIR EXTRACTION AND OFF-GAS SYSTEM

FLOW DIAGRAM

OYSTER CREEK

DWG NO. BR 2008

SH. 1 OF 2

REV. 40

SCALE: NONE

PIMS # N/A

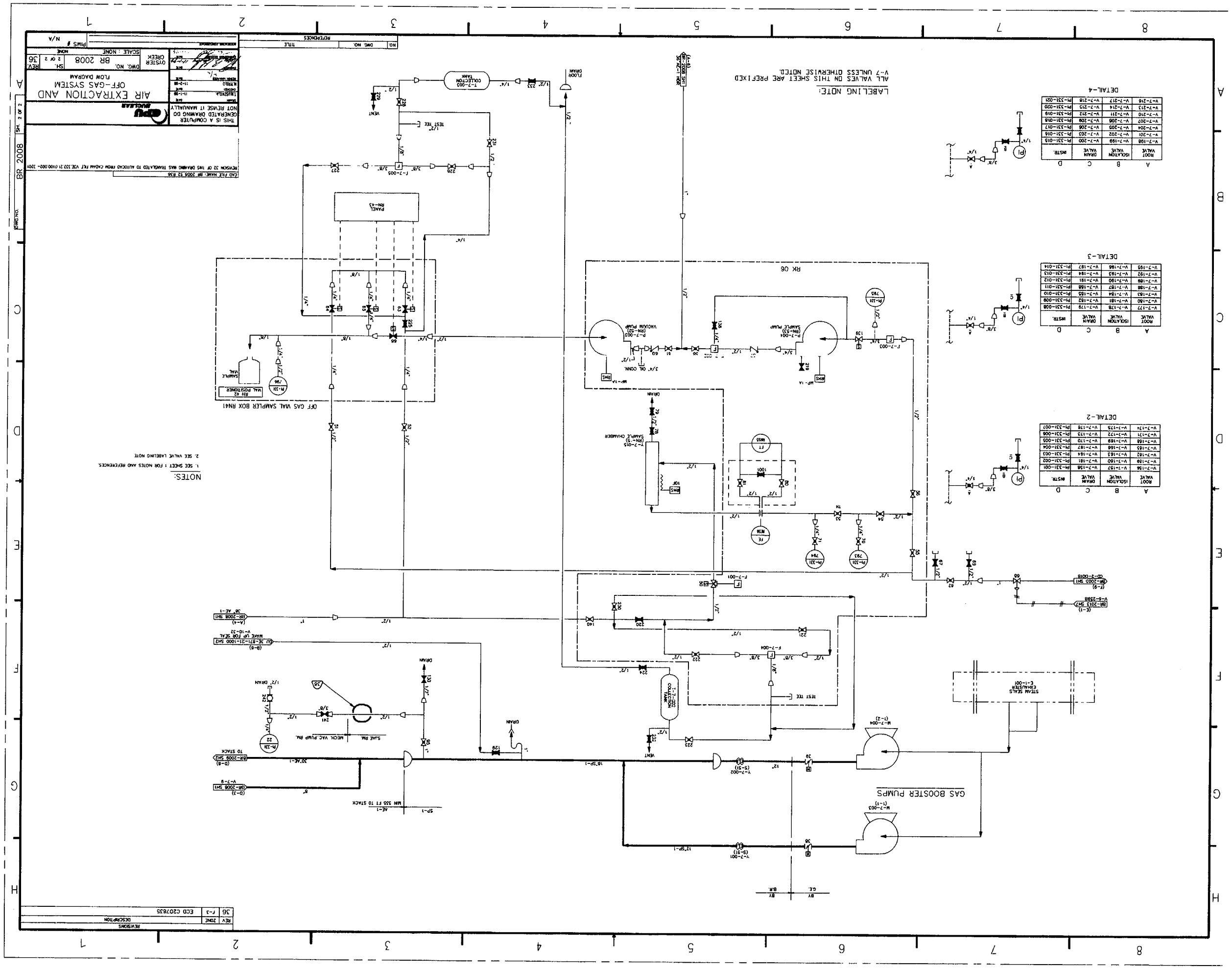
AIR EXTRACTION AND OFF-GAS SYSTEM
FLOW DIAGRAM
OYSTER CREEK
DWG. NO. BR 2008
SCALE : NONE
SH. 2 OF 2
REV. 36
THIS IS A COMPUTER GENERATED DRAWING DO NOT REVISE IT MANUALLY
LABELING NOTE:
ALL VALVES ON THIS SHEET ARE PREFIXED V-7 UNLESS OTHERWISE NOTED.
NOTES:
1. SEE SHEET 1 FOR NOTES AND REFERENCES.
2. SEE VALVE LABELING NOTE
DETAIL-2
DETAIL-3
DETAIL-4
GAS BOOSTER PUMPS
RK 06
PANEL RN-43
OFF GAS VAL SAMPLER BOX RN41
REVISIONS
ECO C207835

REVISIONS		
REV	ZONE	DESCRIPTION
42	C-5	ECD C312143

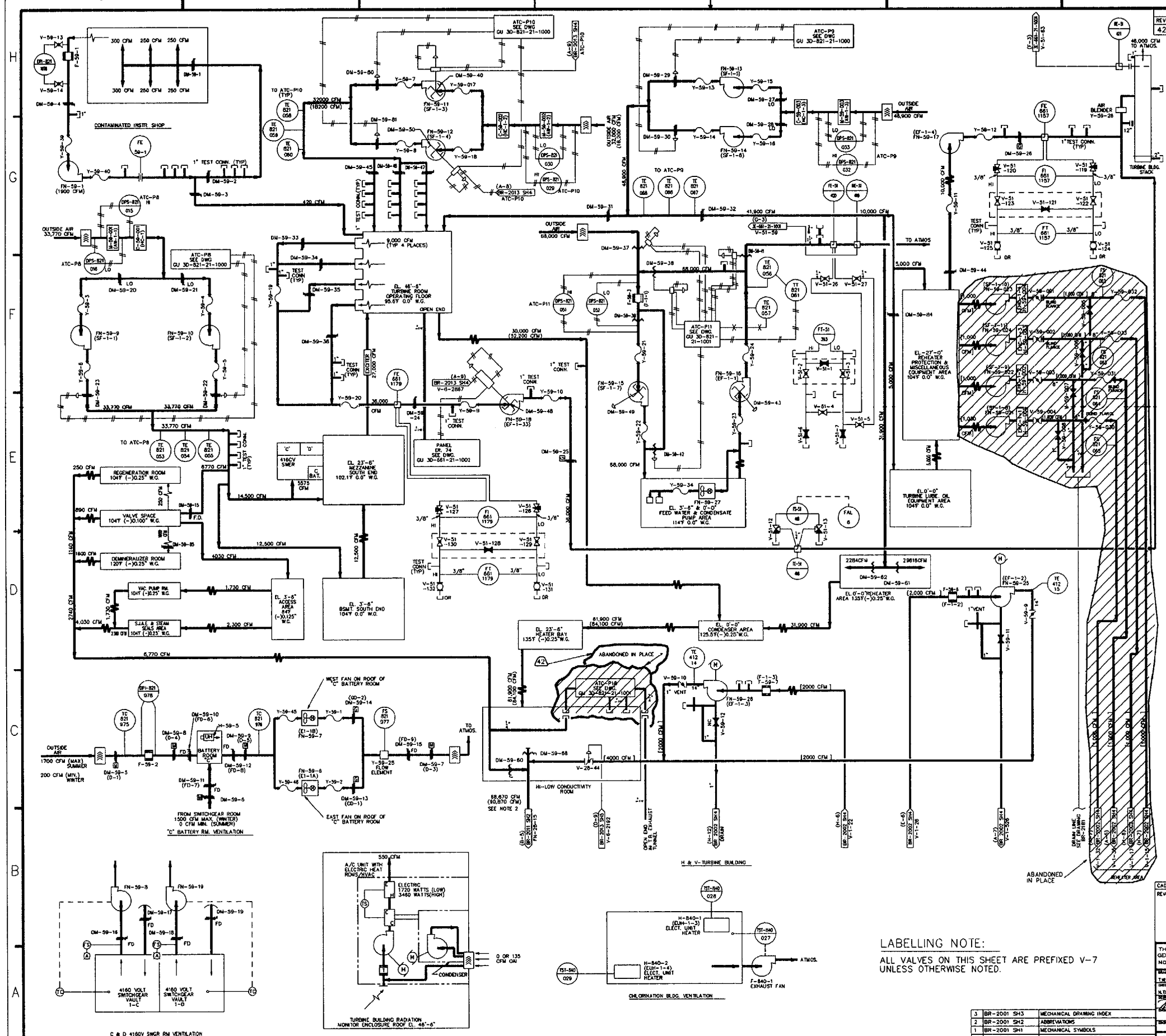

NOTES:

1. SEE LABELLING NOTE.
2. SYSTEMS EF-1-2 & EF-1-3 ARE OPERATED ON AN INTERMITTENT BASIS ONLY WHEN THE REACTOR IS OUT OF SERVICE. AN ADDITIONAL 4000 CFM IS DISCHARGED THROUGH THE PLANT STACK DURING THIS TIME.
3. [ ] INDICATES REHEATER PROTECTION AIR FLOW. WHEN REHEATER PROTECTION SYSTEM IS ACTIVATED, THE FULL CAPACITY OF THE MAIN VENTILATING SYSTEM IS NOT REQUIRED. THE COMBINED FLOW QUANTITY WILL NOT EXCEED THE MAXIMUM CFM INDICATED.
4. MAXIMUM AND MINIMUM AIR QUANTITIES ARE SHOWN BY INDICATING ONE IN PARENTHESES( ). CFM WILL FALL WITHIN THIS RANGE, DEPENDING ON OPERATING CONDITION.
5. TURBINE BUILDING DESIGN EXHAUST FLOW IS 90,870 CFM. WHEN TB OPERATING FLOOR EXHAUST FAN EF-1-33 IS NOT OPERATING WHEN EF-1-33 IS IN OPERATION, STACK EXHAUST FLOW IS 88,670 CFM.
6. VACUUM PUMP FLOW DEPENDS UPON CONDENSER VACUUM AT 0 PSIG. VACUUM PUMP CAPACITY IS 2800 CFM AT CONDENSER DESIGN VACUUM CONDITION, STEAM JET AIR EJECTOR FLOW IS 120 CFM.
7. DURING EMERGENCY OPERATION OF THE STANDBY GAS TREATMENT SYSTEM, R.B. VENTILATION IS ISOLATED. SAME CONDITION ALSO EXISTS DURING STANDBY GAS TREATMENT SYSTEM SURVEILLANCE TESTING.
8. WAS 480 CFM SUPPLY TO ORIGINAL STOREKEEPER & SUPERVISORS OFFICES. ARE NOW SUPPLIED FROM UNIT #3.
9. NO FLOW RATES (CFM) FOR HVAC UNIT #4 C-847-001 AS FOUND CONDITION.
10. FLOW RATES FOR HVAC UNIT #1 AND UNIT #3 G-847-003 WERE TRANSFERRED FROM DWG. AM1210 SH2.
11. AIR SUPPLY TO RADCON OFFICE & FIRE PROTECTION OFFICE IS AS FOUND CONDITION. NO FLOW RATES AVAILABLE.
12. FLOW RATES (CFM) FOR MACHINE SHOP RESERVED CONTINGENT UPON WALKDOWN TO RECALIBRATE THE AREAS.

LABELLING NOTE:

ALL VALVES ON THIS SHEET ARE PREFIXED V-7 UNLESS OTHERWISE NOTED.

NO.	DWG. NO.	TITLE
3	BR-2001 SH3	MECHANICAL DRAWING INDEX
2	BR-2001 SH2	ABBREVIATIONS
1	BR-2001 SH1	MECHANICAL SYMBOLS

REFERENCES

CAD FILE: BR 2009 S1 R42

REVISION 38 OF THIS DRAWING WAS TRANSLATED TO AUTOCAD FROM CADAM FILE: V3L821,21,0400,001-.380P

THIS IS A COMPUTER GENERATED DRAWING. DO NOT REVISE IT MANUALLY.

DRAWN T.NUSINO, JR. 8-5-99
DESIGNED N/A
N.TOLDO 8-11-99
REVIEWED
ENGINEERING APPROVED 8-12-99
ENGINEERING STANDARDS
INTERDISCIPLINARY STANDARDS

GPU NUCLEAR

TURBINE BUILDING
H & V
FLOW DIAGRAM

OYSTER CREEK | DWG. NO. BR 2009 | SH. 1 OF 3 | REV. 42
SCALE : NONE
PIMS # N/A

BR 2009 SH 1 OF 3

REVISIONS		
REV	ZONE	DESCRIPTION
35	C-8	ECDC307221

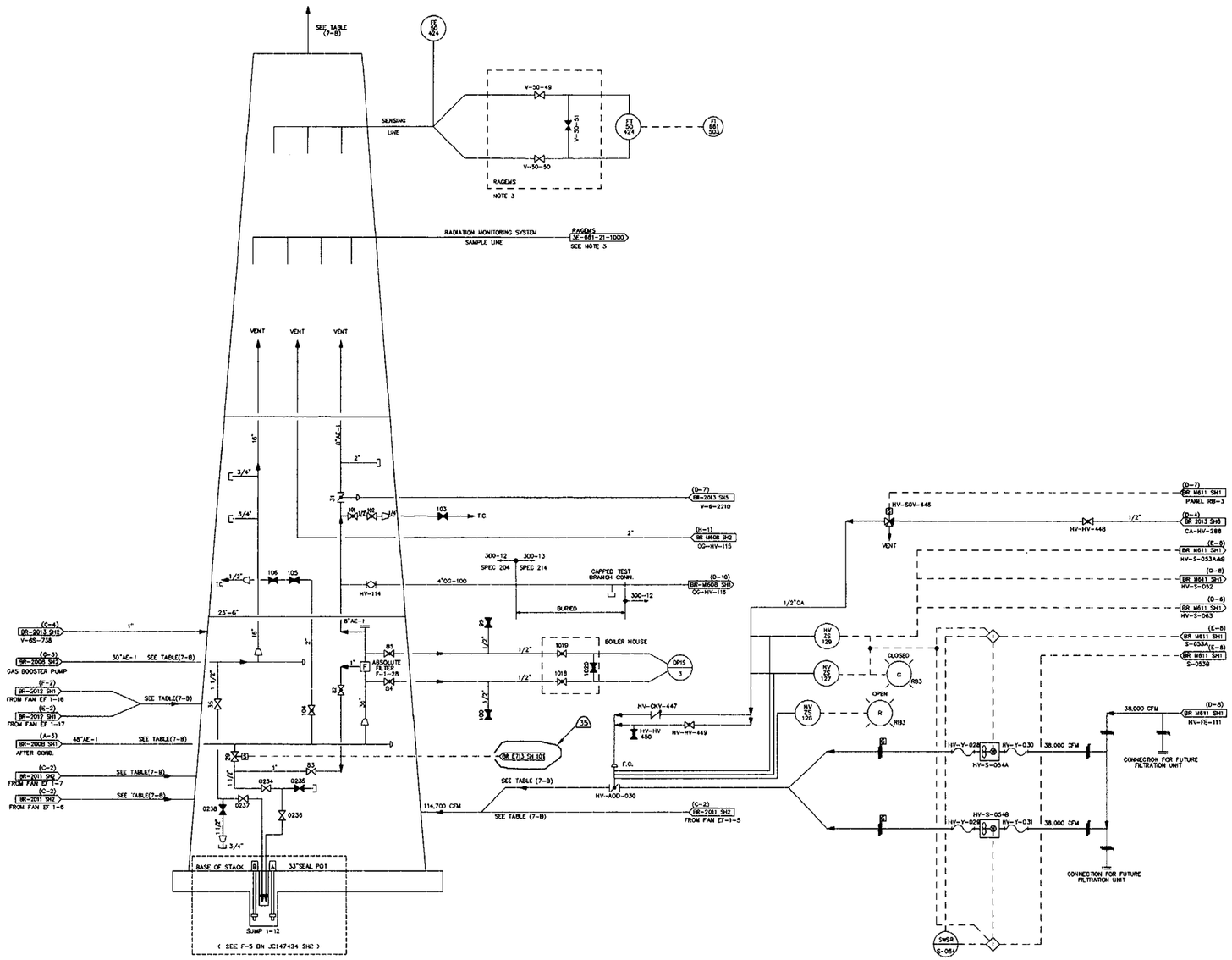

EXHAUST SYSTEMS		START-UP (CFM)	NORMAL POWER (CFM)	EMERG OR SURV. TEST (CFM)	SHUTDOWN (CFM)	NOTES
1.	AIR EXTRACTION & OFF GAS SYS.	2800	120	–	–	6
2.	R.B. VENTILATION (EF-1-5/6)	76,700	76,700	–	76,700	7
3.	T.B. VENTILATION (EF-1-6/7)	68,670	68,670	68,670	68,670	5
4.	N.R.W. BLDG & VENTILATION (HV-5053A & B/HV-5054A & B)	38,000	38,000	38,000	38,000	–
5.	OLD RADWASTE BLDG VENTILATION (EF-1-16 OR EF-1-17)	22,475	22,475	22,475	22,475	–
6.	STANDBY GAS TREATMENT SYS. (EF-1-8 OR EF-1-9)	–	–	2600	–	7
7.	AUGMENTED OFF GAS	NEGLIGIBLE	NEGLIGIBLE	NEGLIGIBLE	NEGLIGIBLE	–
	TOTAL STACK FLOWS	208,645	205,965	131,745	205,845	–

NOTES:

1. SEE SHEET 1 FOR NOTES AND REFERENCES.
2. ALL VALVES PREFIXED BY V-7 UNLESS OTHERWISE NOTED.
3. THE SENSING LINE AND SAMPLE LINE ARE INTERGRAL TO EACH OTHER.

NO.	DWG. NO.	TITLE
		REFERENCES

CAD FILE NAME: BR 2009 S2 R35

REVISION 24 OF THIS DWG. WAS REDRAWN FROM PART OF BR-2008 REV. 15 & 3C-844-21-1000 REV. 3

REVISION 31 OF THIS DRAWING WAS TRANSLATED TO AUTOCAD FROM CADAM FILE V3E.844.21.0100.002-.3101

THIS IS A COMPUTER GENERATED DRAWING DO NOT REVISE IT MANUALLY

GPU NUCLEAR

DRAWN	MARCY A. CARLSON	1-26-00
CHECKED	N. TITOLO	1-26-00
SUPERVISOR		1-26-00

H & V
MAIN STACK
FLOW DIAGRAM

OYSTER CREEK

DWG. NO. BR 2009 | SH. 2 OF 3 | REV. 35

SCALE : NONE

PIMS # N/A

CHG NO. 2009

SH. 2 OF 3

REVISIONS		
REV.	ZONE	DESCRIPTION
27		FCN C116740

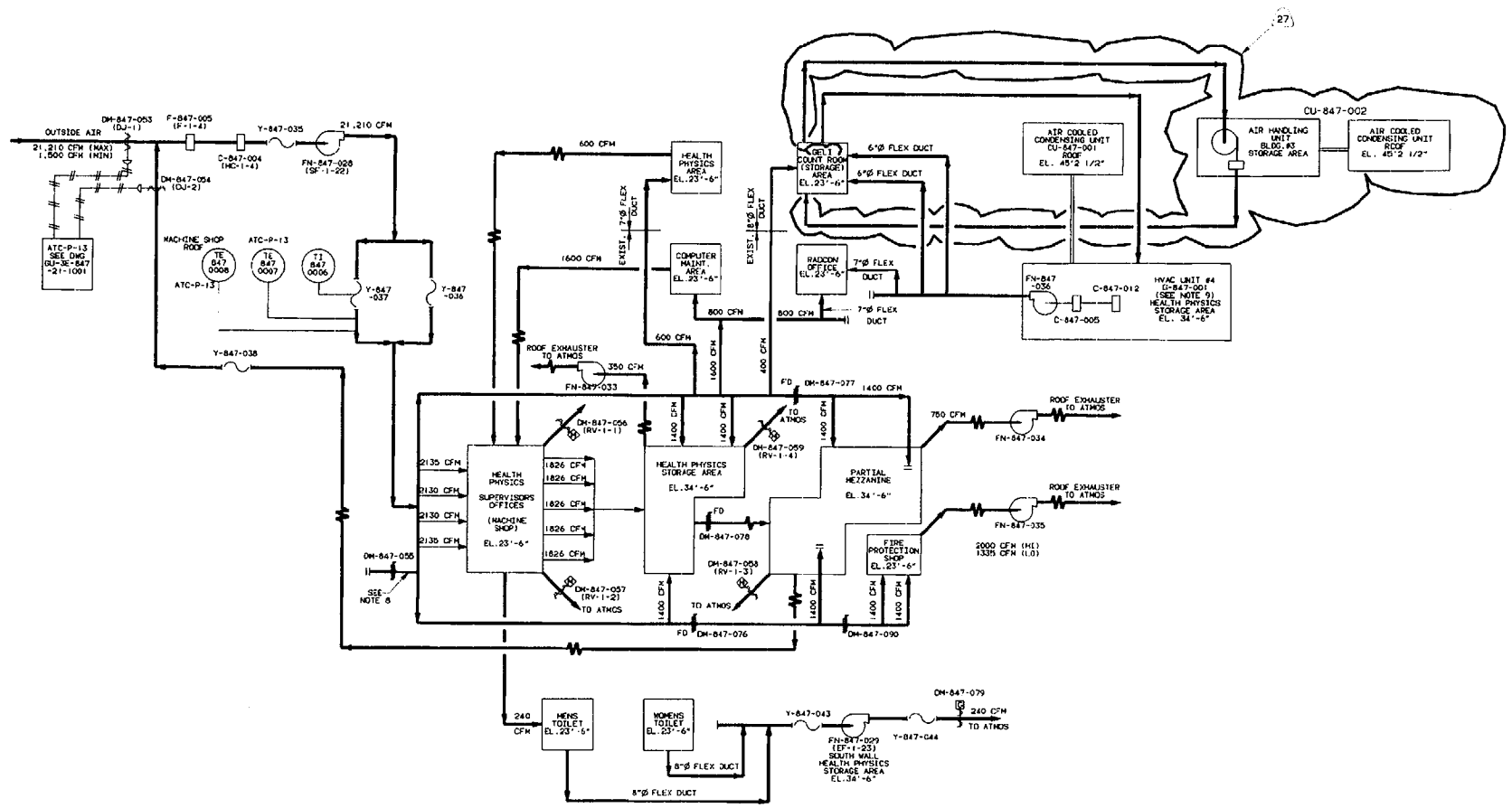

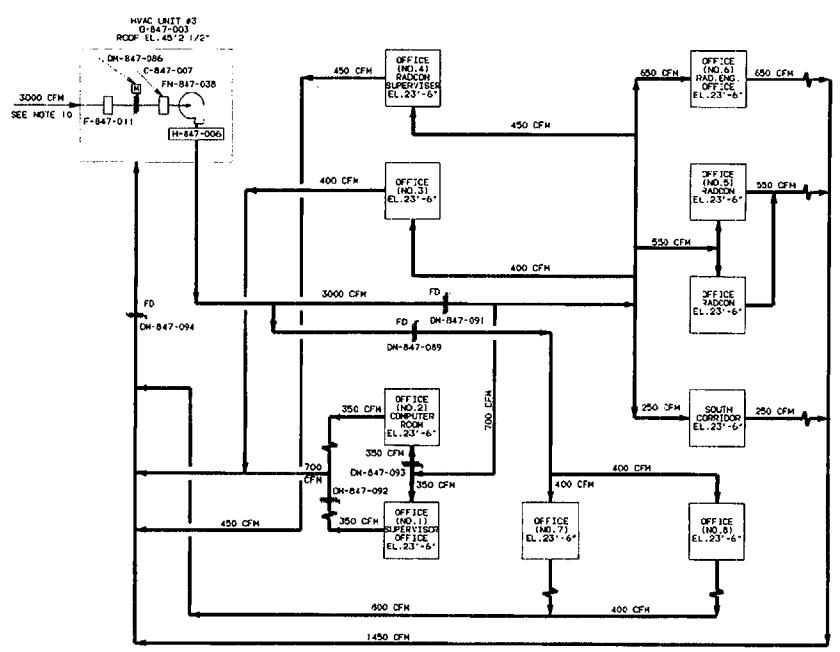

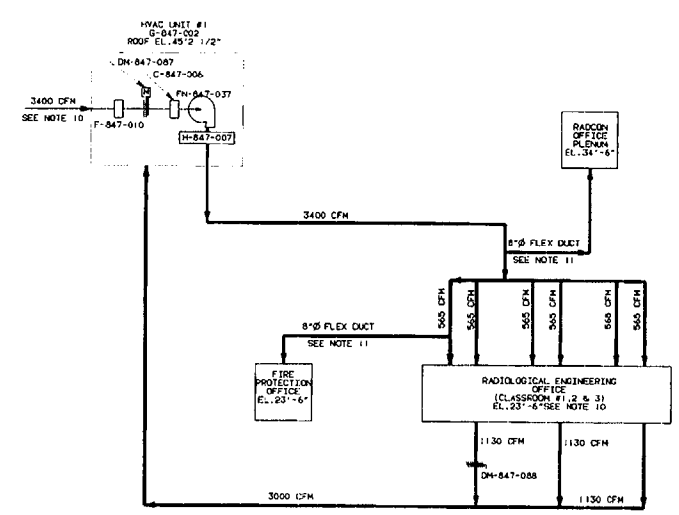

NOTES:

1. SEE SHEET 1 FOR NOTES AND REFERENCES.
2. ALL VALVES PREFIXED BY V-847 UNLESS OTHERWISE NOTED.

CAD FILE: V3E.847.21.0100.003-.2701
THIS IS A COMPUTER GENERATED DWG. DO NOT REVISE IT MANUALLY

REVISION 24 OF THIS DRAWING WAS REDRAWN FROM PART OF 3E-820-21-1000 REV. C

DRAWN: H. ROSS 06/14/95	GPU Nuclear/BR	
CHECKED: DATE 6-23-95	MACH. SHOP & STORAGE BLD'G. H & V FLOW DIAGRAM	
DESIGN LEADER: DATE 6-23-95		
ENGINEER: L. Dopkin DATE 6-23-95	OYSTER CREEK	DWG. NO. 2009 SH. 3 OF 3 REV. 27
MANAGER APPROVAL: DATE		SCALE: NONE

NO.	DWG. NO.	TITLE
		REFERENCES

DWG. MECH. | BA | W.O.

DWG. NO. 2009 SH. 3 OF 3

PLOT: DATE: 06/23/95 SCALE: 1.0000 DRAWING: V3E847A1D100003-2701 USER: DOPKIN FILE: V3E0003

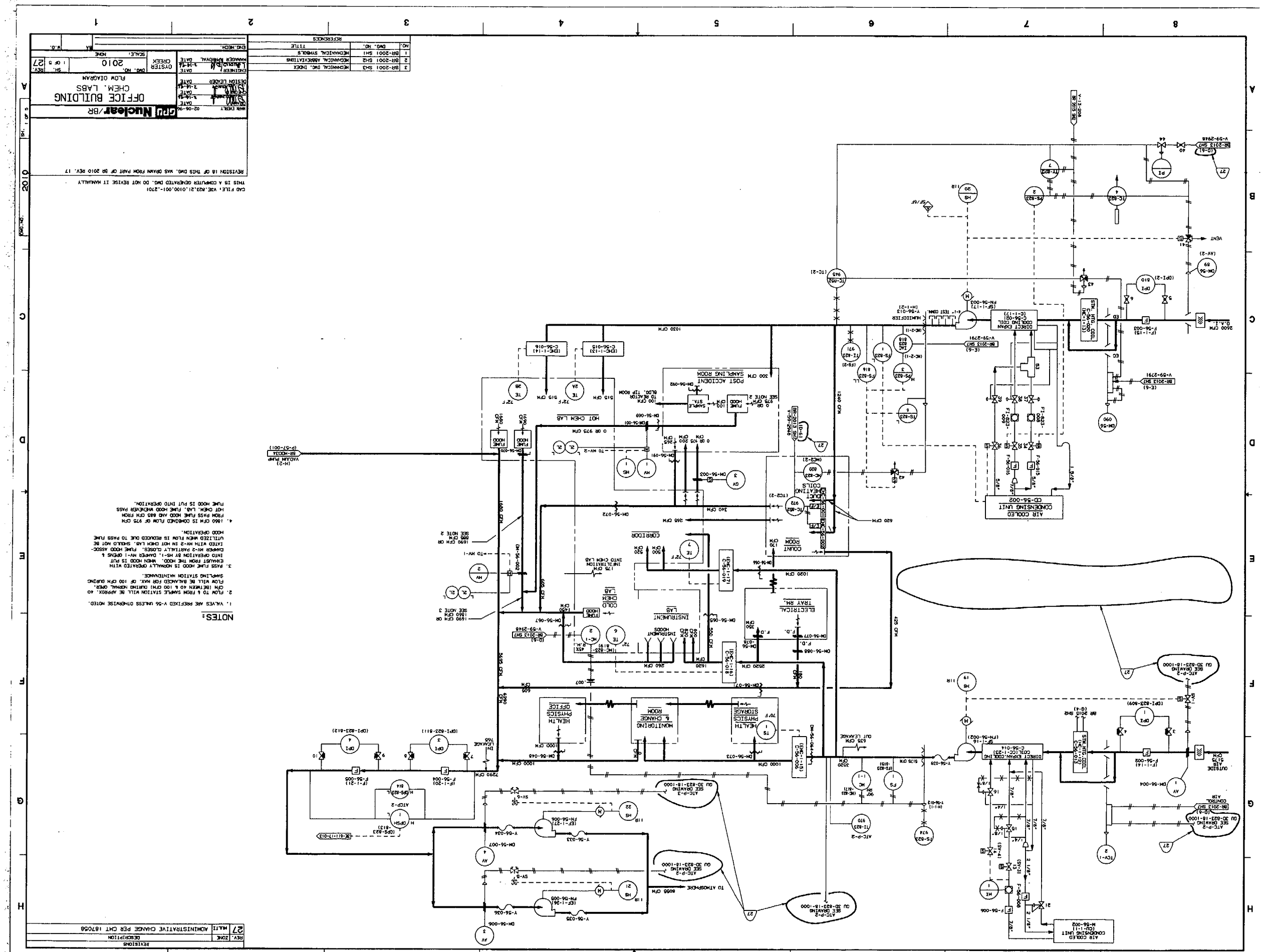
OFFICE BUILDING
CHEM. LABS
FLOW DIAGRAM
2010
NOTES:
1. VALVES ARE PREFIXED V-56 UNLESS OTHERWISE NOTED.
2. FLOW TO A FROM SAMPLE STATION WILL BE APPROX. 40 CFM (DEPENDING ON A 100 CFM) DURING NORMAL OPER. FLOW WILL BE BALANCED FOR MAX. OF 100 CFM DURING SAMPLING STATION MAINTENANCE.
3. PASS FUME HOOD IS NORMALLY OPERATED WITH DAMPER HV-2 PARTIALLY CLOSED. FUME HOOD ASSOCIATED WITH OPERATION BY HS-1, DAMPER HV-1 OPENS & EXHAUST FROM THE HOOD. WHEN HOOD IS PUT INTO OPERATION THE HV-2 IN HOT CHEM LAB. SHOULD NOT BE UTILIZED WHEN FLOW IS REDUCED DUE TO PASS FUME HOOD OPERATION.
4. 1660 CFM IS COMBINED FLOW OF 975 CFM FROM PASS FUME HOOD AND 685 CFM FROM HOT CHEM LAB. FUME HOOD MEMBER PASS FUME HOOD IS PUT INTO OPERATION.
REVISION 18 OF THIS DWG. WAS DRAWN FROM PART OF BR 2010 REV. 17
THIS IS A COMPUTER GENERATED DWG. DO NOT REVISE IT MANUALLY
CAD FILE: VGE.R23.21.0100.001-2701
REVISIONS
REV. ZONE DESCRIPTION
27 H&I1 ADMINISTRATIVE CHANGE PER CMT 1670568
REFERENCES
NO. DWG. NO. TITLE
1 BR-2001 SH1 MECHANICAL SYMBOLS
2 BR-2001 SH2 MECHANICAL ABBREVIATIONS
3 BR-2001 SH3 MECHANICAL DWG. INDEX
AIR COOLED CONDENSING UNIT CD-56-002
DIRECT EXPAN. COOLING COIL (C-1-17)
DIRECT EXPAN. COOLING COIL (C-1-21)
HEALTH PHYSICS STORAGE
MONITORING & CHANGE ROOM
HEALTH PHYSICS OFFICE
HOT CHEM LAB
COLD CHEM LAB
INSTRUMENT LAB
ELECTRICAL TRAY RM.
COUNT ROOM
CORRIDOR
POST ACCIDENT SAMPLING ROOM
OUTSIDE AIR 9170 CFM
TO ATMOSPHERE
8050 CFM
2600 CFM
VENT
SEE DRAWING GU 30-623-18-1000

REVISIONS		
REV.	ZONE	DESCRIPTION
21		ADMINISTRATIVE CHANGE PER CMT #160936

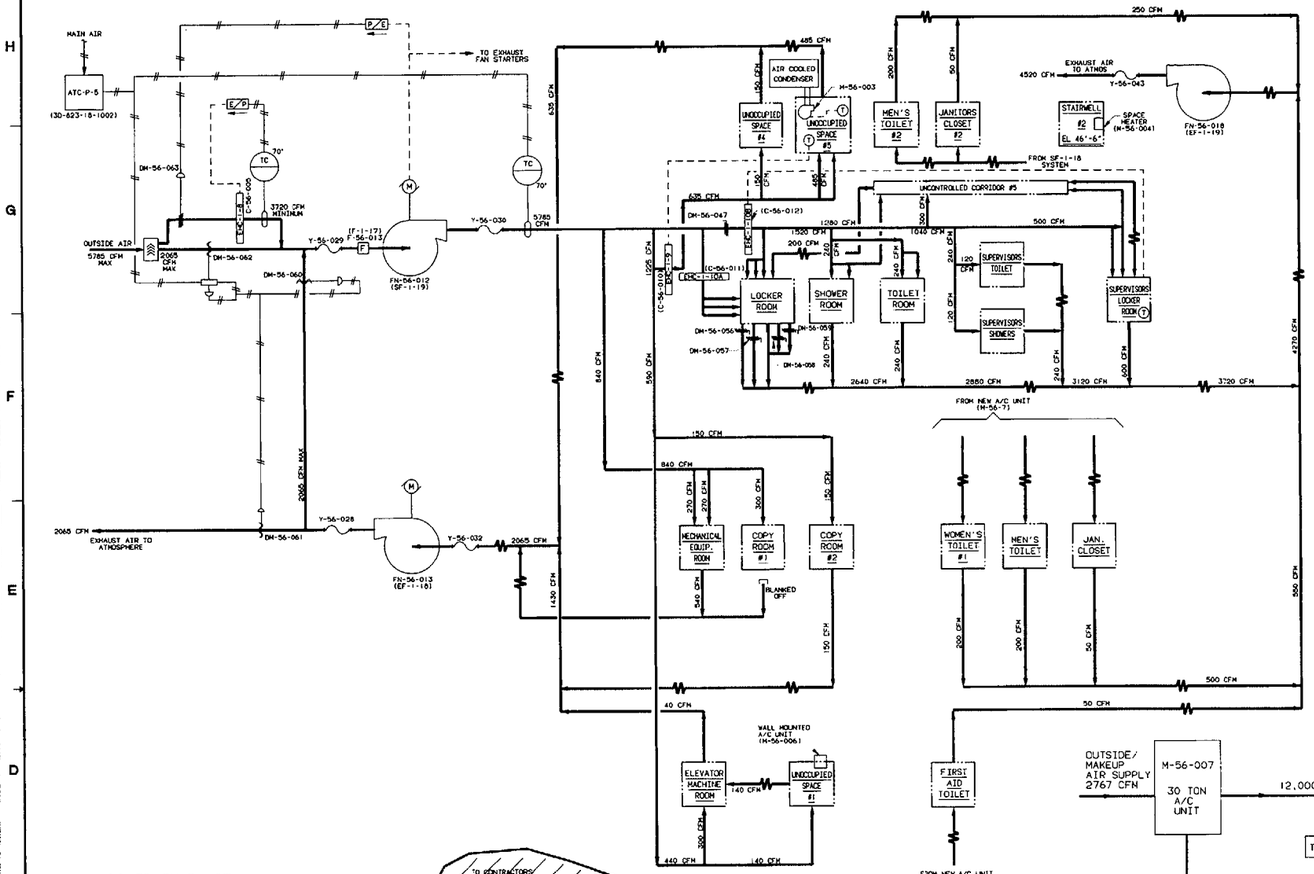

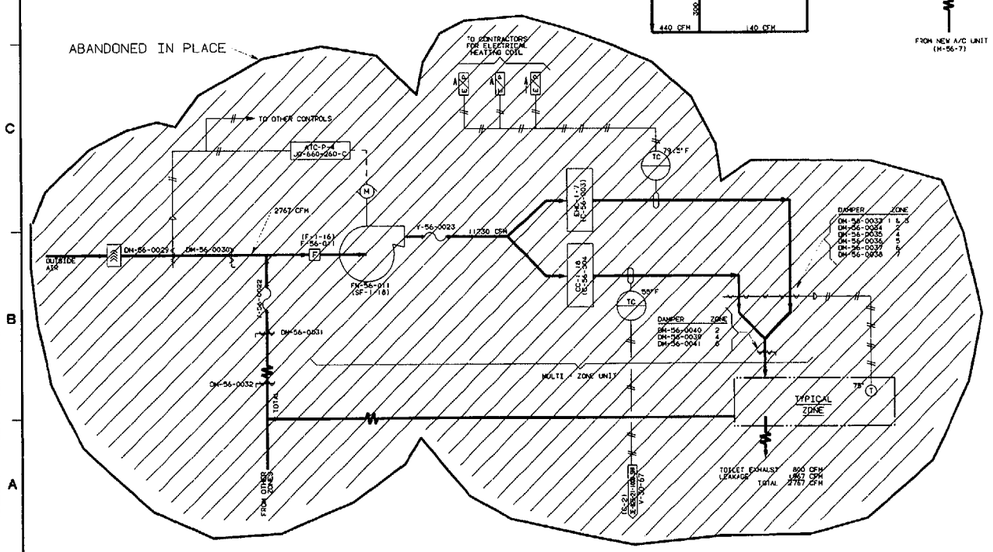

TOILET EXHAUST 800 CFM
NATURAL LEAKAGE 1967 CFM
TOTAL LOSSES 2767 CFM

ZONE SCHEDULE

ZONE NO.	VALVE NUMBER	ZONE AIR SUPPLY (CFM)	VAV CAPACITY (KW)	MOD FLOOR	MAIN OFFICE BUILDING AREA SERVED
1	1	1750	2.0	3	EATING AND MEETING ROOM
2	2	1525	3.0	3	OPERATIONS CLERK'S OFFICE AND BUSINESS OFFICE
3	3	1480	3.0	3	OBDGA MANAGER'S OFFICE AND BIOMASS MANAGER'S OFFICE
4	4	784	2.0	3	ENGINEERS' OFFICE
5	5	1143		3	OPERATIONS MANAGER'S OFFICE
6	6	1424	3.0	3	MANAGER'S OFFICE AND SECRETARY'S OFFICE
7	7A	770	1.5	2	PLANS AND PROGRAMS OFFICE
7	7B	770	1.5	2	PLANS AND PROGRAMS OFFICE
7	7C	770	1.5	2	PLANS AND PROGRAMS OFFICE
8	8	667	2.0	2	CONFERENCE ROOM
9	9A	772	1.5	2	VICE PRESIDENT'S OFFICE
9	9B	772	1.5	2	VICE PRESIDENT'S OFFICE
10	10	1278	2.0	2	DEPUTY DIRECTOR'S OFFICE AND SECRETARY'S OFFICE
11	11			1	LOBBY ENTRANCE

NOTES:

1. SEE SHEET 1 FOR NOTES AND REFERENCES.
2. ALL VALVES PREFIXED BY V-56 UNLESS OTHERWISE NOTED.

CAD FILE: V3E.823.21.0100.002-.2101
THIS IS A COMPUTER GENERATED DWG. DO NOT REVISE IT MANUALLY

REVISION 18 OF THIS DWG. WAS REDRAWN FROM PART OF BR 2010 REV. 17.

N. ROSS 06/15/95 DRAWN DATE
DESIGN LEADER DATE
ENGINEER DATE
MANAGER APPROVAL DATE

GPU Nuclear/BR

OFFICE BUILDING HVAC
SOUTH END
FLOW DIAGRAM

OYSTER CREEK

DWG. NO. 2010 SH. 2 OF 5 REV. 21

SCALE: NONE

ENG. MECH. BA W.O.

NO.	DWG. NO.	TITLE
		REFERENCES

REVISIONS		
REV	ZONE	DESCRIPTION
23	E-3	ECDC211630

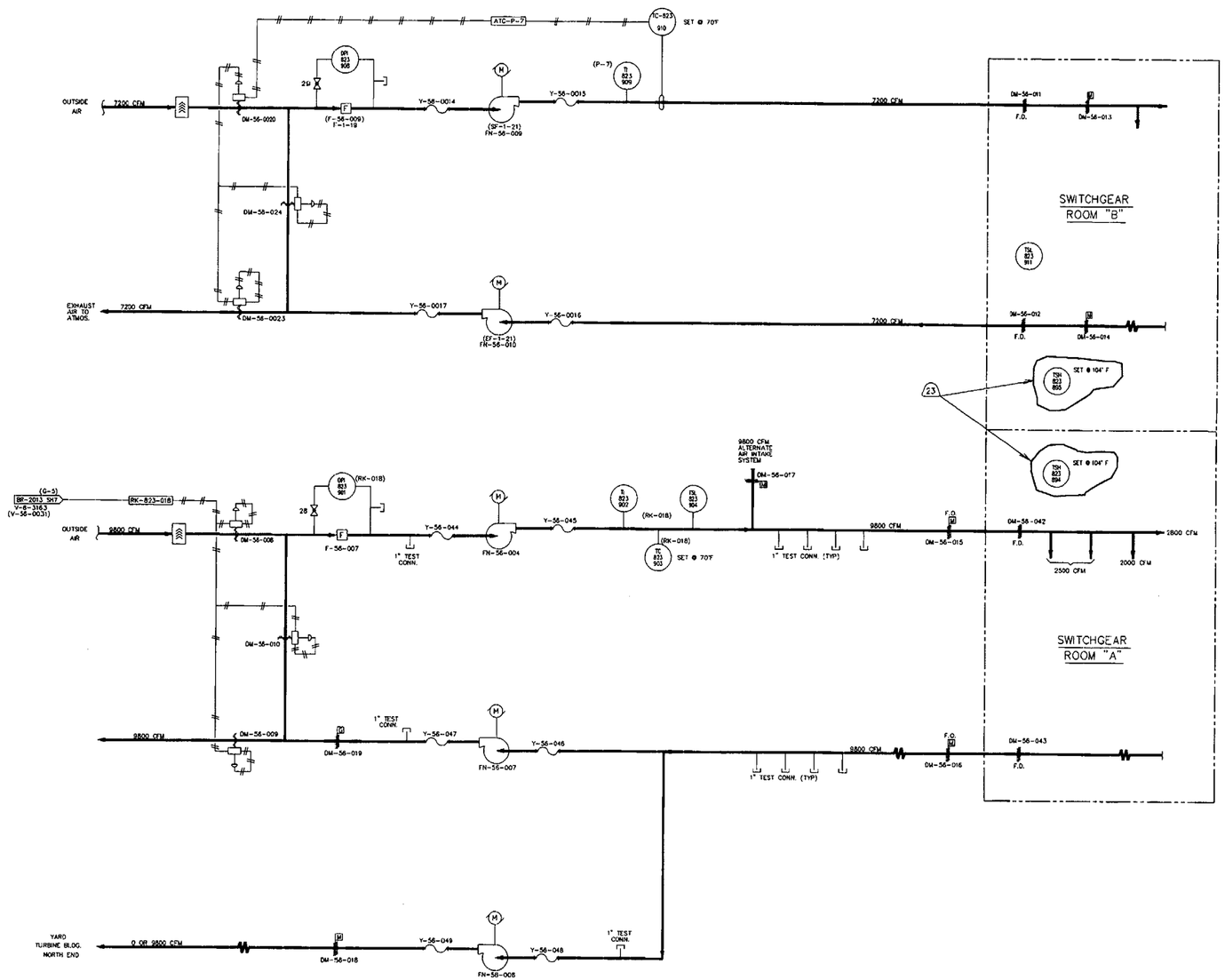

VENTILATION SWITCHGEAR
ROOMS A & B

NOTES:

1. SEE SHEET 1 FOR NOTES AND REFERENCES.
2. ALL VALVES ARE PREFIXED BY V-56 UNLESS OTHERWISE NOTED.

CAD FILE NAME: BR 2010 S3 R23

REVISION 22 OF THIS DWG. WAS TRANSLATED TO AUTOCAD FROM CADAM FILE: V3K,823,21,0100,003-,2201
REVISION 18 OF THIS DRAWING WAS REDRAWN FROM PART OF BR 2010 REV. 17

THIS IS A COMPUTER GENERATED DRAWING. DO NOT REVISE IT MANUALLY.

GPU NUCLEAR

DRAWN NANCY A. CARLSON	DATE 5-8-90
DATE 5-11-90	
DATE 6-9-90	
CHECKED	DATE
ENGINEERING MANAGER	DATE

OFFICE BUILDING HVAC
(480V SWG. RM.)
FLOW DIAGRAM

OYSTER CREEK	DWG. NO. BR 2010	SH. 3 OF 5	REV. 23
	SCALE : NONE		

REFERENCES

NO.	DWG. NO.	TITLE

REVISIONS CONTINUED

PIMS # N/A

BR 2010 SHE 115

REVISIONS		
REV	ZONE	DESCRIPTION
26	F-8 G,E-3	ECDC315180

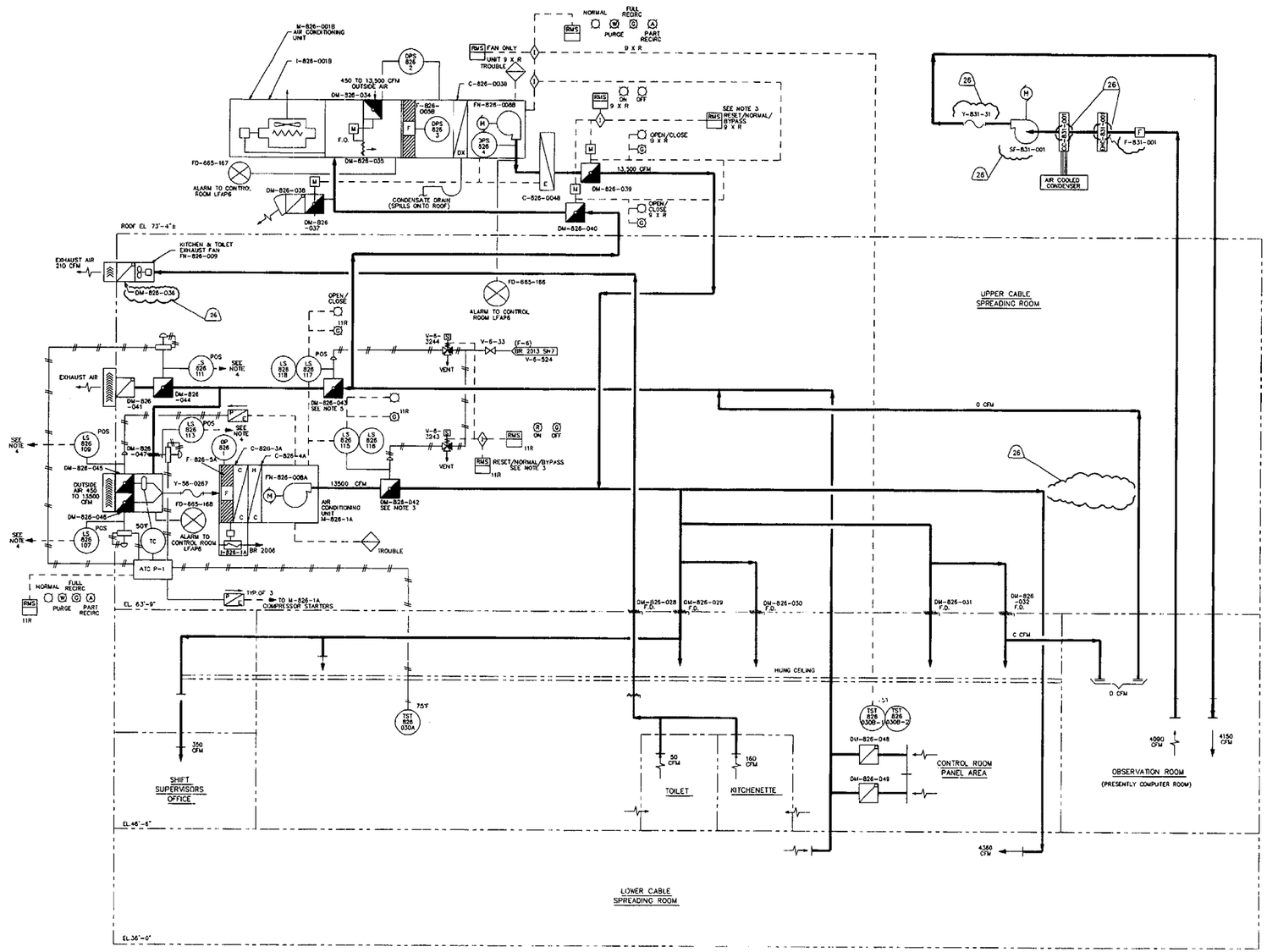

NOTES:

1. SEE SHEET 1 FOR ADDITIONAL NOTES AND REFERENCES.
2. ALL VALVE TAG NO. ARE PREFIXED V-826 UNLESS OTHERWISE NOTED.
3. RESET/NORMAL/BYPASS SWITCH FOR OVERRIDING FIRE PROTECTION SIGNAL.
4. SIGNAL FOR DAMPER MODE INDICATION LIGHTS ON CONTROL ROOM PANEL.
5. DAMPER FAILS CLOSED ON LOSS OF POWER OR LOSS OF CONTROL AIR.

CAD FILE NAME: BR 2010 S4 R26

REVISION 18 OF THIS DWG. WAS REDRAWN FROM SH 15050.63-EM-02 REV. 2 AND GU 3E-826-21-1000 REV. 1.

REVISION 24 OF THIS DRAWING WAS TRANSLATED TO AUTOCAD FROM CADAM FILE:V3E.826.21.0100.004-.2401

THIS IS A COMPUTER GENERATED DRAWING DO NOT REVISE IT MANUALLY

GPU NUCLEAR

DRAWN	NANCY A. CARLSON	11-2-2000
CHECKED		
SUPERVISED		
ENGINEER	N/A	
DESIGNING ORGANIZATION	N/A	

CONTROL AND CABLE SPREADING ROOMS HVAC

FLOW DIAGRAM

OYSTER CREEK	DWG. NO. BR 2010	SH. 4 OF 5	REV. 26
	SCALE: NONE		

PIMS # N/A

NO.	DWG. NO.	TITLE
		REFERENCES

DWG NO BR 2010 SH 4 OF 5

REVISIONS		
REV	ZONE	DESCRIPTION
21	F7	ECD C307469

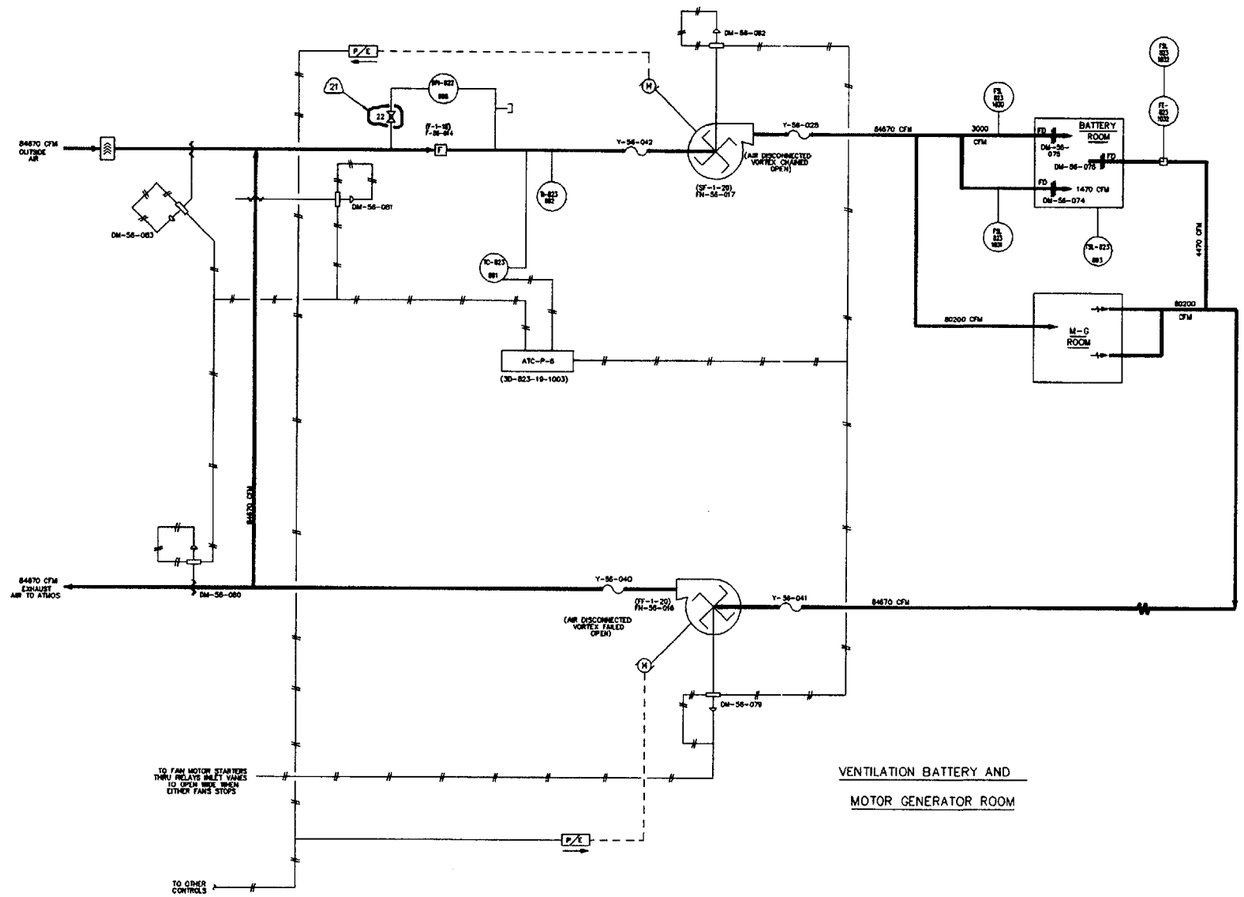

VENTILATION BATTERY AND

MOTOR GENERATOR ROOM

NOTES:

1. SEE SHEET 1 FOR NOTES AND REFERENCES.
2. ALL VALVE TAG NUMBERS ARE PREFIXED V-56 UNLESS OTHERWISE NOTED.

CAD FILE NAME: BR 2010 S5 R21

REVISION 20 OF THIS DRAWING WAS TRANSLATED TO AUTOCAD FROM CADAM CAD FILE: V2E.823.27.0100.005-.2001

REVISION 18 OF THIS DWG. WAS REDRAWN FROM PART OF BR 2010 REV. 17.

THIS IS A COMPUTER GENERATED DRAWING DO NOT REVISE IT MANUALLY

DRAWN	T.W.PZKO,JR.	10-4-90
CHECKED	K.W.YOLO	10-5-90
ENGINEER		10-5-90

GPU NUCLEAR

BATTERY AND MG SET ROOM VENTILATION FLOW DIAGRAM

OYSTER CREEK

DWG. NO. BR 2010 | SH. 5 OF 5 | REV. 21

SCALE : NONE

PWS # N/A

NO.	DWG. NO.	TITLE
REFERENCES		

PROJECT BR 2010 SH. 5 OF 5

REVISIONS		
REV.	ZONE	DESCRIPTION
40	A-7	ECDC208024

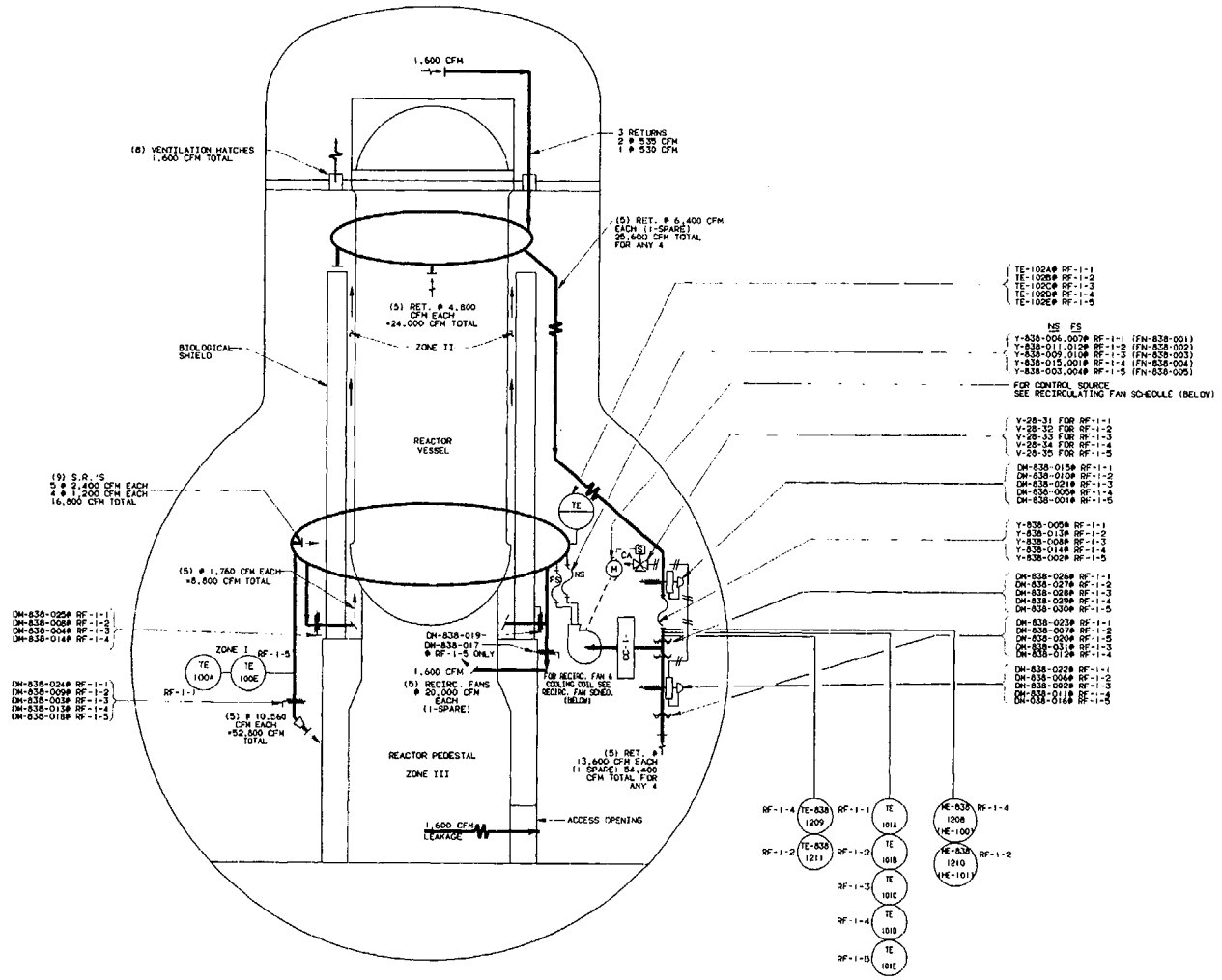

NOTES:

1. ALL VALVES ARE PREFIXED V-28 UNLESS OTHERWISE NOTED.

RECIRCULATING FAN SCHEDULE FOR DRYWELL (CHILLED WATER AS COOLING SYSTEM)

FOR PIPING DWG SEE GU-3E-838-21-100

FAN NO.	NEW GPU NO.	COOLING COIL DESIGNATION	UNIT & COOLER LOCATION	FAN MOTOR CONTROL SOURCE	AIR FLOW CFM	COOLING WATER SOURCE	WATER GPM	WATER TEMP °F IN	WATER TEMP °F OUT	CAPACITY BTU	AIR TEMP. °F IN	AIR TEMP. °F OUT
RF-1-1	FN-838-001	CC-1-5	DRYWELL	MAIN CONTROL ROOM	20,000	DRYWELL CHILLED WATER SYSTEM	150	44	66	1.9X10⁶	117	87
RF-1-2	FN-838-002	CC-1-6										
RF-1-3	FN-838-003	CC-1-7										
RF-1-4	FN-838-004	CC-1-8										
RF-1-5	FN-838-005	CC-1-9										

NOTES:

1. THE CHILLED WATER COOLING SYSTEM PROVIDES A TOTAL OF 850 GPM OF CHILLED WATER TO A MIN. OF THREE AND A MAX. OF FIVE COOLERS.
2. THE 850 GPM OF CHILLED WATER WILL BE PROPORTIONALLY DISTRIBUTED AMONGST THE OPERATIONAL COOLERS.
3. THE ABOVE DATA REFLECTS THE MAXIMUM DESIGN CONDITIONS AND CAPABILITY OF EACH COOLER.
4. WHEN DRYWELL TEMPERATURE REACHES 80° THE FOLLOWING CONDITIONS EXIST:
   WATER IN/OUT = 44°F/54°F
   AIR IN/OUT = 80°F/53°F
   CAPACITY = 573,000 BTU/HR

RECIRCULATING FAN SCHEDULE FOR DRYWELL (REACTOR BLDG. CLOSED COOLING WATER SYS. AS COOLING SYS.)

FAN NO.	NEW GPU NO.	COOLING COIL DESIGNATION	UNIT & COOLER LOCATION	FAN MOTOR CONTROL SOURCE	AIR FLOW CFM	COOLING WATER SOURCE	WATER GPM	WATER TEMP °F IN	WATER TEMP °F OUT	CAPACITY BTU/HR	AIR TEMP. °F IN	AIR TEMP. °F OUT	DETAIL	FC (VLVE CONN.)	DM (DAMPER)
RF-1-1	FN-838-001	(CC-838-001) CC-1-1	DRYWELL	MAIN CONTROL ROOM	20,000	REAC. BLDG. CLOS. COOL WATER SYS.	150	95	105	750,000	139	101.3	—	—	—
RF-1-2	FN-838-002	(CC-838-002) CC-1-2											—	—	—
RF-1-3	FN-838-003	(CC-838-003) CC-1-3											—	—	—
RF-1-4	FN-838-004	(CC-838-004) CC-1-4											—	—	—
RF-1-5	FN-838-005	(CC-838-005) CC-1-5										101.2	—	—	—
RF-1-6	FN-28-0020	(CC-28-0015) CC-1-10	TUNNEL BETWEEN REACTOR & RUNBLDG.		2,500		6.9	100	120	69,000		104.4	"C"	—	—
RF-1-7	FN-28-0021	(CC-28-0016) CC-1-11	TUNNEL BETWEEN REACTOR & RUNBLDG.		2,500		6.9		120	69,000		104.4	"C"	—	—
RF-1-8	FN-28-0023	(CC-28-0017) CC-1-12	R.B.CLOSED COOL SYSTEM PUMP ROOM REAC.BLDG.	AUTOMATIC FROM CORE SPRAY PUMP	8,700		28.2		116	226,000	145	121.0	"B"	V-28-0012 V-28-0013	V-28-0006 V-28-0007
RF-1-9	FN-28-0019	(CC-28-0018) CC-1-13	R.B.CLOSED COOL SYSTEM PUMP ROOM REAC.BLDG.	AUTOMATIC FROM CORE SPRAY PUMP	8,700		28.2		116	226,000	145	121.0	"A"	V-28-0009	—
RF-1-10	FN-28-0024	(CC-28-0019) CC-1-14	R.B.CLOSED COOL SYSTEM PUMP ROOM REAC.BLDG.	AUTOMATIC FROM CONTAIN.SPRAY PUMP	12,400		13.4		128	187,000	135	121.0	"A"	V-28-0012	—
RF-1-11	FN-28-0022	(CC-28-0020) CC-1-15	R.B.CLOSED COOL SYSTEM PUMP ROOM REAC.BLDG.	AUTOMATIC FROM CONTAIN.SPRAY PUMP	12,400		13.4		128	187,000	135	121.0	"A"	V-28-0014	—

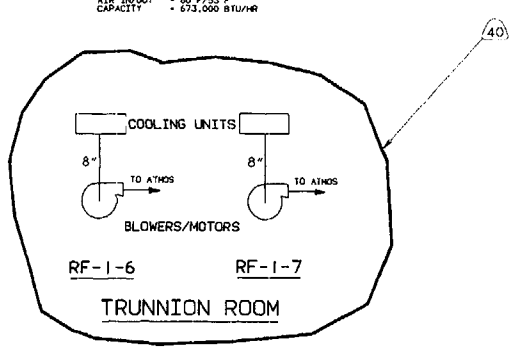

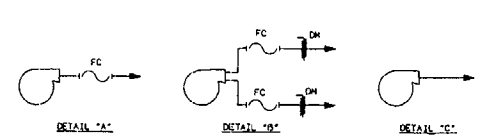

OUTLET DETAILS

(SEE TABLE ABOVE)

CAD FILE: V3E.838.21.0100.001-.4001
THIS IS A COMPUTER GENERATED DWG. DO NOT REVISE IT MANUALLY

REVISION 34 OF THIS DWG. WAS REDRAWN FROM PART OF BR 2011 SH1 REV. 29 & PART OF BR 2011 SH2 REV. 7.

NO.	DWG. NO.	TITLE
17	3E-551-21-1001	NUCLEAR LIQUID SAMPLING FINAL FDW FACIL & INRM CONT.UNIT F.D.
16	3E-243-21-1000 SH1	DRYWELL AND TORUS VACUUM RELIEF SYS.F.D.
15	3E-822-21-1000 SH1	STANDBY GAS TREATMENT F.D.
14	BR-2009 SH2	H & V MAIN STACK F.D.
13	BR-2013 SH9	INSTRUMENT (CONTROL) AIR SYS.F.D.
12	BR-2013 SH7	INSTRUMENT (CONTROL) AIR SYS.F.D.
11	BR-2013 SH5	INSTRUMENT (CONTROL) AIR SYS.F.D.
10	GU-3E-838-21-100 SH1	DRYWELL CHILLED WATER SYS.F.D.
9	3E-871-21-1000 SH2	DOMESTIC WTR. & PRETREATMENT SYS.F.D.
8	BR-2015 SH2	HEATING & PROCESS STM.SYS.F.D.
7	BR-2168	H & V PALMS & SECTIONS-REACTOR BLDG.
6	BR-2172	DRYWELL COOLING SECTIONS & DETAILS
5	BR-2195	YARD PIPING
4	JC-147434 SH1	SUMP & WASTE COLLECTION SYS.F.D.
3	BR-2001 SH3	MECHANICAL DRAWING INDEX
2	BR-2001 SH2	ABBREVIATIONS
1	BR-2001 SH1	MECHANICAL SYMBOLS

REFERENCES

NANCY A. CARLSON 10-8-96 DRAWN
CHECKED 10-18-96 DATE
DESIGN LEADER DATE
ENGINEER DATE
MANAGER APPROVAL DATE

GPU Nuclear/BR

DRYWELL COOLING SYSTEM FLOW DIAGRAM

OYSTER CREEK | DWG. NO. 2011 | SH. 1 OF 3 | REV. 40

SCALE: NONE

ENG. MECH. | BA | BASH

REVISIONS		
REV	ZONE	DESCRIPTION
56	C-4,5	ECD C400407

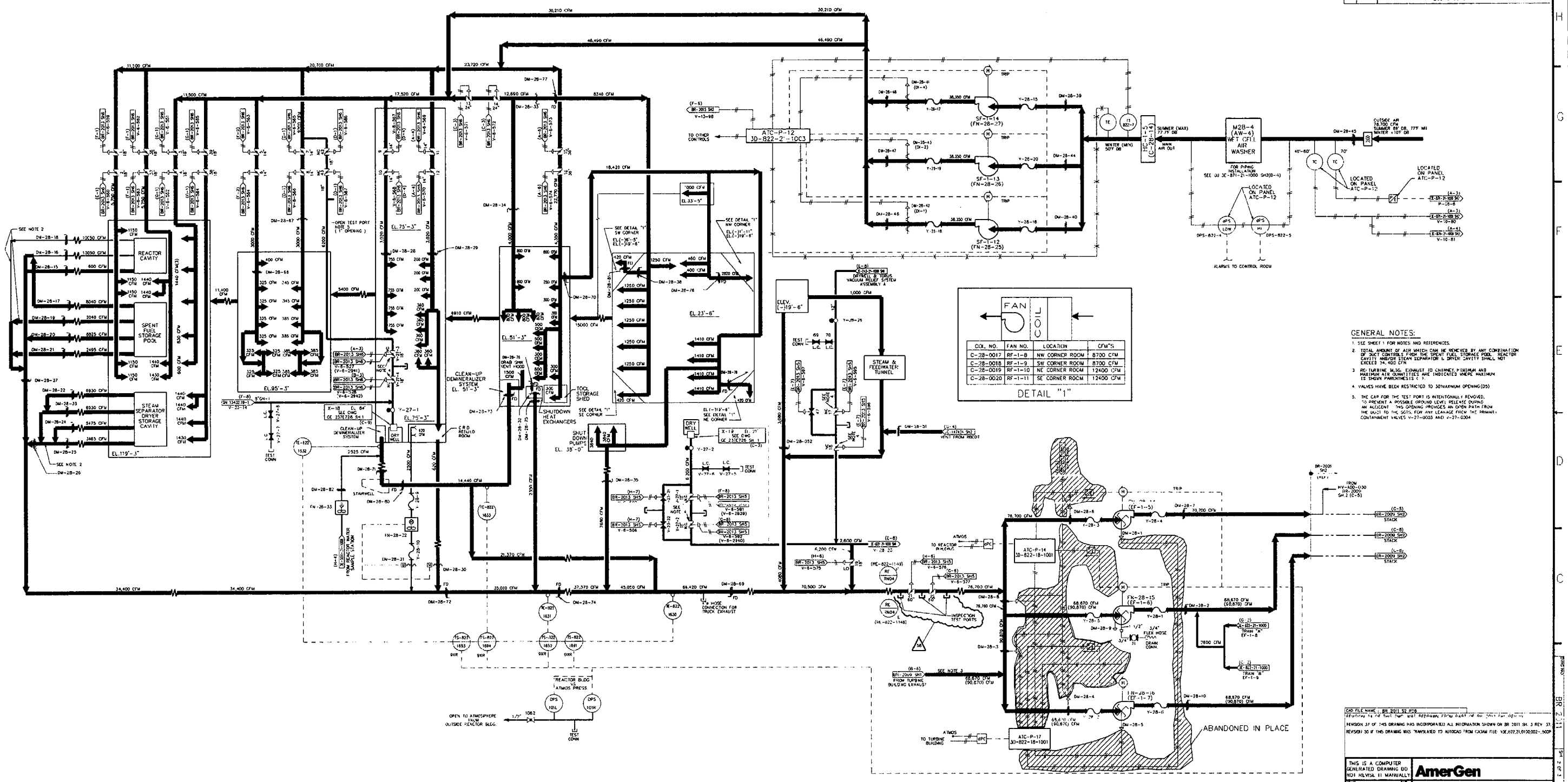

GENERAL NOTES:

1. SEE SHEET 1 FOR NOTES AND REFERENCES.
2. TOTAL AMOUNT OF AIR WHICH CAN BE REMOVED BY ANY COMBINATION OF DUCT CONTROLS FROM THE SPENT FUEL STORAGE POOL, REACTOR CAVITY AND/OR STEAM SEPARATOR & DRYER CAVITY SHALL NOT EXCEED 34,400 CFM.
3. RE-TURBINE BLDG. EXHAUST TO CHIMNEY MINIMUM AND MAXIMUM AIR QUANTITIES ARE INDICATED WHERE MAXIMUM IS SHOWN PARENTHESIS ( ).
4. VALVES HAVE BEEN RESTRICTED TO 30%MAXIMUM OPENING(DS).
5. THE CAP FOR THE TEST PORT IS INTENTIONALLY REMOVED. TO PREVENT A POSSIBLE GROUND LEVEL RELEASE DURING AN ACCIDENT THIS OPENING PROVIDES AN OPEN PATH FROM THE VAULT TO THE SOIL FOR ANY LEAK-AGE FROM THE PRIMARY CONTAINMENT VALVES V-27-0003 AND V-27-0304

LABELLING NOTE:
ALL VALVES ON THIS SHEET ARE PREFIXED V-28 UNLESS OTHERWISE NOTED.

CAD FILE NAME : BR 2011 S2 H58
REVISION 37 OF THIS DRAWING HAS INCORPORATED ALL INFORMATION SHOWN ON BR 2011 SH. 3 REV. 37.
REVISION 30 IF THIS DRAWING WAS TRANSLATED TO AUTOCAD FROM CASAM FILE: V:\E_822_21_0100_002 - 30CP

THIS IS A COMPUTER GENERATED DRAWING DO NOT REVISE IT MANUALLY

DRAWN	NAMC A. CARSON	12/19/00
CHECKED		
	R. KARN/SAID	12/19/00
ENGINEERING CHECKER		

AmerGen

REACTOR BUILDING VENTILATION FLOW DIAGRAM

OYSTER CREEK | DWG NO. BR 2011 | SH. 2 OF 3 | REV. 56 | SCALE : NONE | PMS # N/A

NO	DWG NO	TITLE
REFERENCES		

REVISIONS		
REV	ZONE	DESCRIPTION
46	H-7	ECDC312170

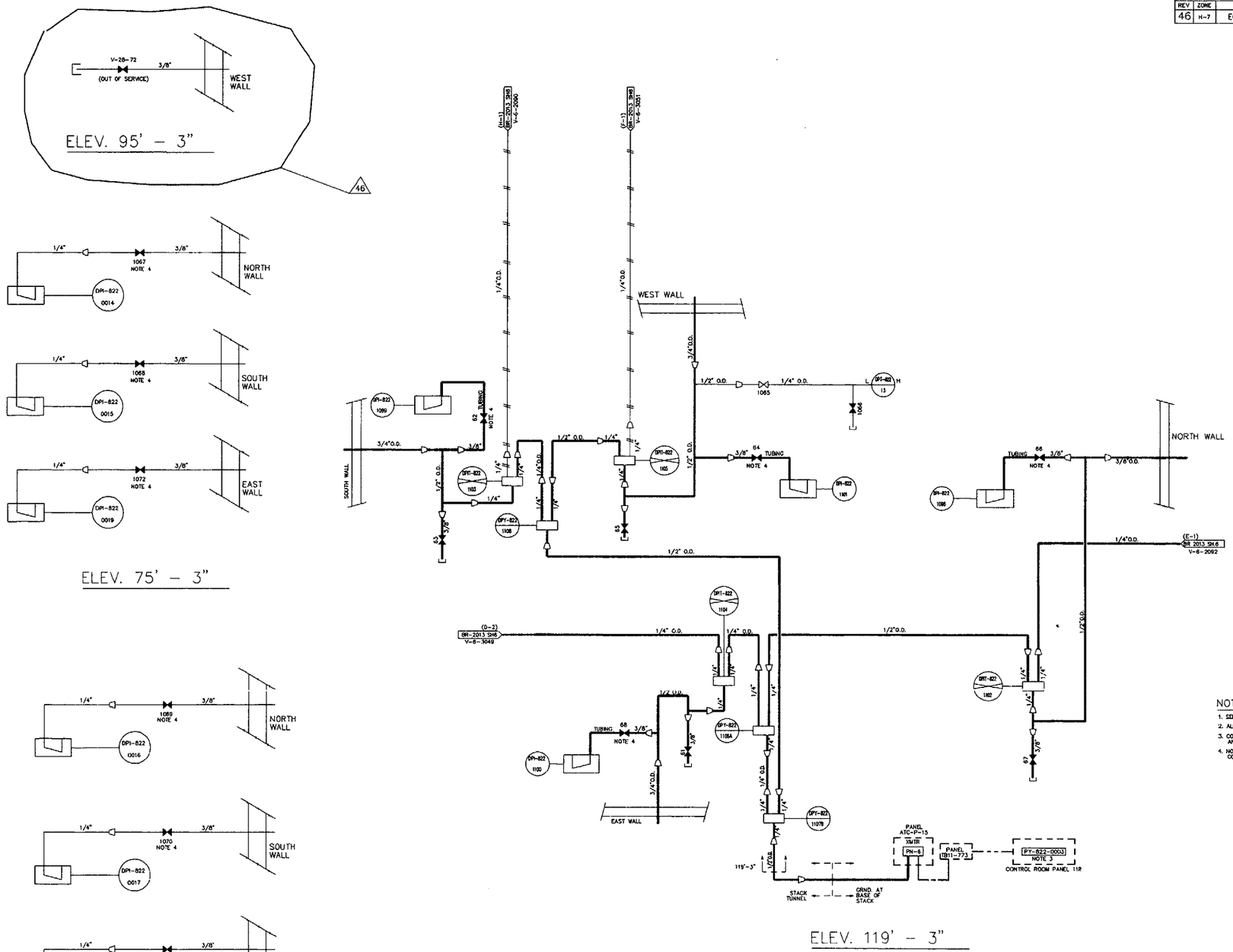

NOTES:

1. SEE SHEET 1 FOR NOTES AND REFERENCES.
2. ALL VALVES ARE PREFIXED BY V-28 UNLESS OTHERWISE NOTED.
3. COMPONENT PY-822-0003 PROVIDES AN OUTPUT SIGNAL TO ANNUNCIATOR L-8-C ON PANEL 5F/6F
4. NORMALLY CLOSED,OPENED ONLY DURING SECONDARY CONTAINMENT LEAK RATE TEST

REACTOR BUILDING
NEGATIVE PRESSURE MONITORING SYSTEM

CAD FILE NAME: BR 2011 S3 R46

REVISION 34 OF THIS DWG. WAS REDRAWN FROM PART OF BR 2011 REV. 29.

REVISION 45 OF THIS DWG. WAS TRANSLATED TO AUTOCAD FROM CADAM FILE: V3E,822,21,0100,003-,4501

THIS IS A COMPUTER GENERATED DRAWING DO NOT REVISE IT MANUALLY

DRAWN	NANCY A. CARLSON	12-15-99
CHECKED		
DESIGN CHECKED		
ENGINEER		
ENGINEERING MANAGER		

GPU NUCLEAR

REACTOR BUILDING
VENILATION
FLOW DIAGRAM

OYSTER CREEK	DWG. NO.	SH.	REV.
	BR 2011	3 OF 3	46
	SCALE : NONE		

PIMS # N/A

NO.	DWG. NO.	TITLE
	REFERENCES	

DWG.NO. BR 2011 SH. 3 OF 3

REVISIONS		
REV	ZONE	DESCRIPTION
14	THRU-OUT	ECDC312147

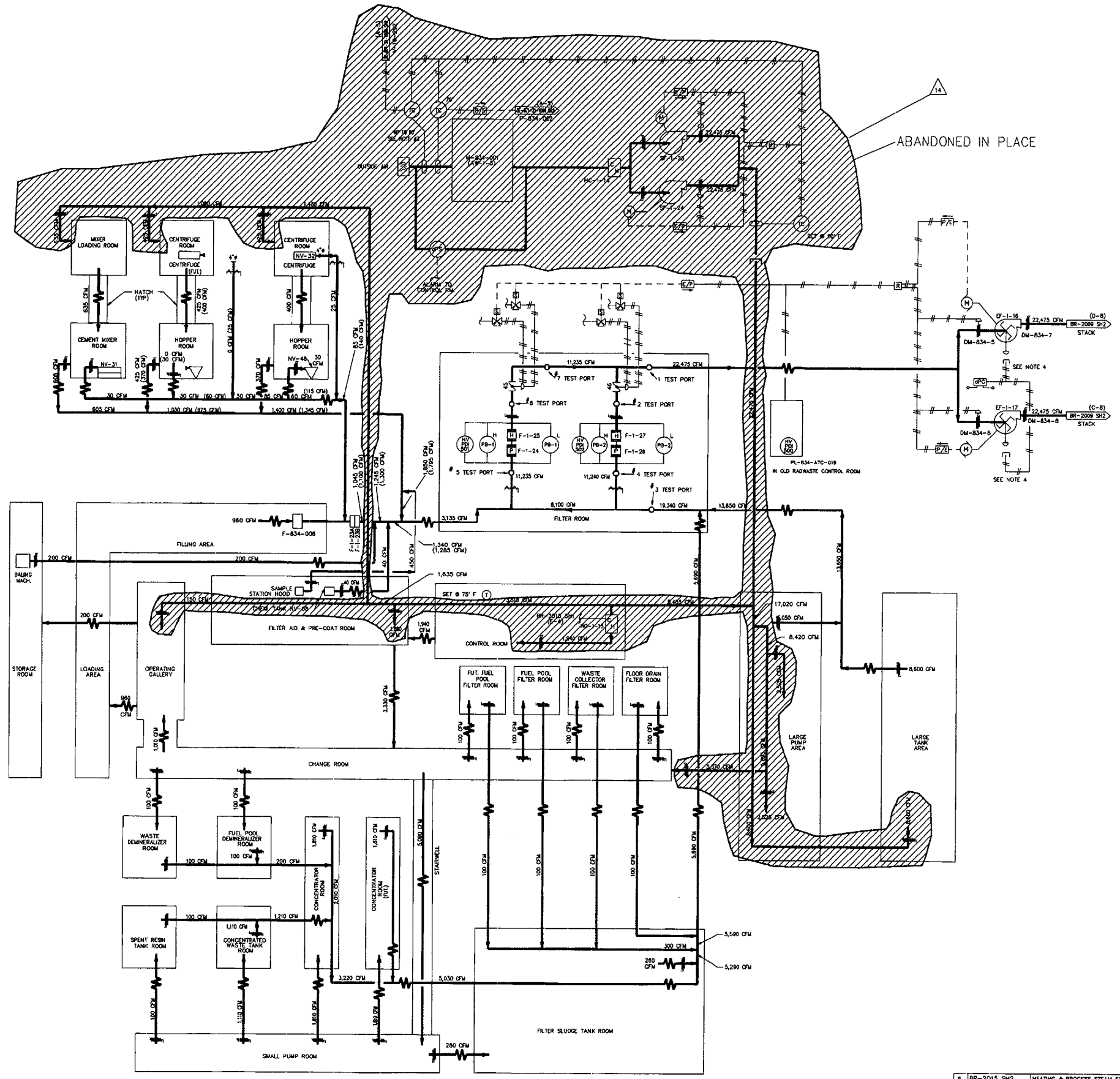

NOTES:

1. VALVES ARE PREFIXED V-28 UNLESS OTHERWISE NOTED.
2. AIR QUANTITIES SHOWN IN PARENTHESES () INDICATE FUTURE REQUIREMENTS AFTER INSTALLATION OF SECOND CENTRIFUGE & HOPPER.
3. TC DRAINS TANK @ 40', FILLS TANK @ 60'
4. AIR SUPPLY DISCONNECTED AND ABANDONED IN PLACE. VORTEX DAMPERS PINNED IN FULL OPEN POSITION.

NO.	DWG. NO.	TITLE
6	BR-2015 SH2	HEATING & PROCESS STEAM SYS.F.D.
5	BR-2009 SH2	H & V MAIN STACK F.D.
4	3C-871-21-1000 SH2	DOMESTIC WATER & PRETREATMENT SYS.F.D.
3	BR-2001 SH3	MECHANICAL DRAWING INDEX
2	BR-2001 SH2	ABBREVIATIONS
1	BR-2001 SH1	MECHANICAL SYMBOLS

REFERENCES

CAD FILE NAME: BR 2012 S1 R14

REVISION 11 OF THIS DWG. WAS TRANSLATED TO AUTOCAD FROM CADAM FILE: V3E.834.21.0100.001-.1101

THIS IS A COMPUTER GENERATED DRAWING DO NOT REVISE IT MANUALLY

GPU NUCLEAR

DRAWN: NANCY A. CARLSON 5-5-00

CHECKED: 5-19-00

DESIGN ENGINEER

CHECKED

DESIGN ENGINEER MANAGER

OLD RADWASTE
BUILDING H & V
FLOW DIAGRAM

OYSTER CREEK

DWG. NO. BR 2012 | SH. 1 OF 1 | REV. 14

SCALE : NONE

DWG NO. BR 2012 SH. 1 OF 1

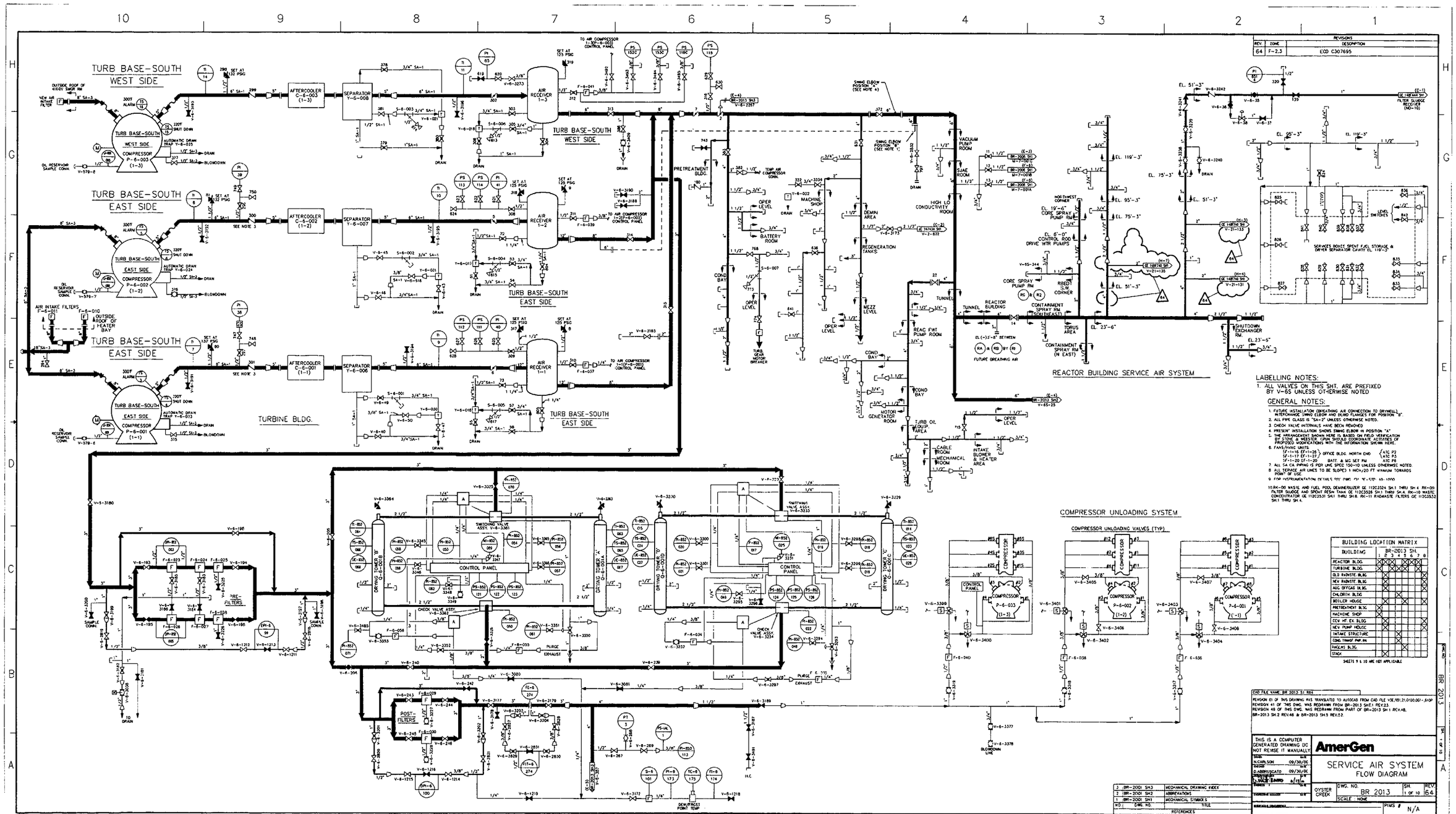
TURB BASE-SOUTH WEST SIDE
TURB BASE-SOUTH EAST SIDE
TURB BASE-SOUTH EAST SIDE
TURBINE BLDG.
AFTERCOOLER C-6-003 (1-3)
AFTERCOOLER C-6-002 (1-2)
AFTERCOOLER C-6-001 (1-1)
SEPARATOR Y-6-008
SEPARATOR Y-6-007
SEPARATOR Y-6-006
AIR RECEIVER 1-3
AIR RECEIVER 1-2
AIR RECEIVER 1-1
PRETREATMENT BLDG.
REACTOR BUILDING SERVICE AIR SYSTEM
COMPRESSOR UNLOADING SYSTEM
COMPRESSOR UNLOADING VALVES (TYP)
DRYING TOWER "A" Q-6-001B
DRYING TOWER "B" Q-6-001C
DRYING TOWER "C" Q-6-001D
CONTROL PANEL
PRE-FILTERS
POST-FILTERS
LABELLING NOTES:
1. ALL VALVES ON THIS SHT. ARE PREFIXED BY V-65 UNLESS OTHERWISE NOTED
GENERAL NOTES:
BUILDING LOCATION MATRIX
AmerGen
SERVICE AIR SYSTEM
FLOW DIAGRAM
OYSTER CREEK
DWG. NO. BR 2013
SH. 1 of 10
REV 64
SCALE : NONE
PIMS # N/A
THIS IS A COMPUTER GENERATED DRAWING DO NOT REVISE IT MANUALLY
REFERENCES
BR-2001 SH3 MECHANICAL DRAWING INDEX
BR-2001 SH2 ABBREVIATIONS
BR-2001 SH1 MECHANICAL SYMBOLS
REVISIONS
REV ZONE DESCRIPTION
64 F-2,3 ECO C307695

REVISIONS		
REV	ZONE	DESCRIPTION
75	E-10	ECD C400201

NEW RADWASTE BLDG. SERVICE AIR SYSTEM

(VALVE NUMBERS AS SHOWN, INSTRUMENT TAG NUMBERS AS SHOWN.)

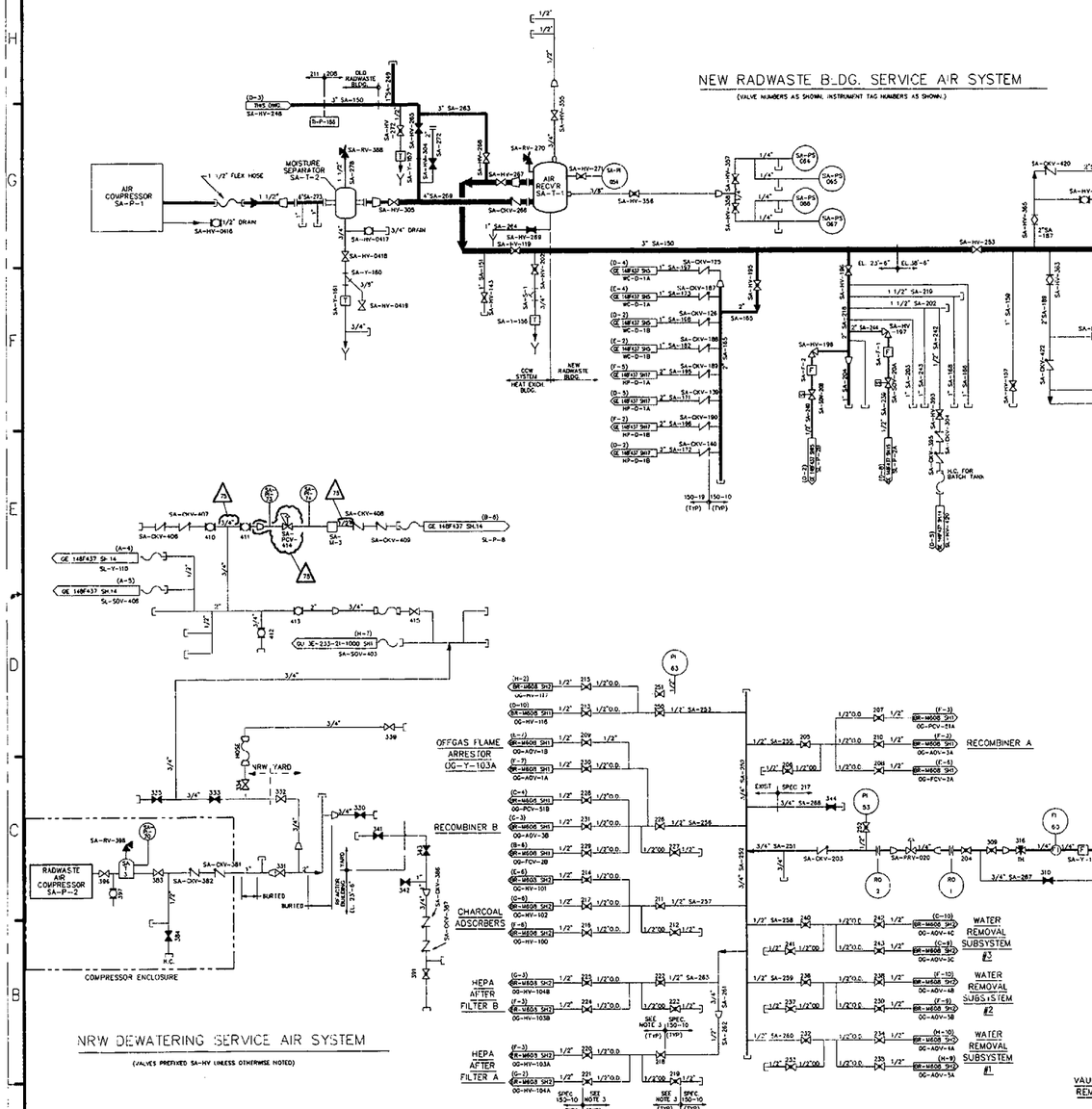

LABELLING NOTE:

ALL VALVE NUMBER PREFIXES ARE IDENTIFIED UNDER BUILDING IDENTIFICATION HEADINGS.

NOTES:

1. SEE SHEET 1 FOR GENERAL NOTES.
2. CHECK VALVE INTERNALS HAVE BEEN REMOVED.
3. TUBING AND FITTINGS PER SPEC. 3024-202
4. Y=XXX= DENOTES 2000-XXX ON INSTRUMENTATION.
5. SERVICE AIR SYSTEM IN NEW RADWASTE BLDG. HAS BEEN INTERNALLY CONTAMINATED AND HOSE STATIONS HAVE BEEN REMOVED & CAPPED.

BUILDING LOCATION MATRIX

BUILDING	BR-2013 SH 1	2	3	4	5	6	7	10
REACTOR BLDG	X	X		X	X	X		
TURBINE BLDG	X	X		X	X	X		
OLD RADWSTE BLDG		X						X
NEW RADWSTE BLDG		X						X
AUG. OFFGAS BLDG		X						X
CHLORIN BLDG		X			X			
BOILER HOUSE		X			X			X
PRETREATMENT BLDG		X						
MACHINE SHOP	X							
CCW HT. EX. BLDG		X						
NEW PUMP HOUSE		X						
INTAKE STRUCTURE		X						
COND TRANSF PMP BN				X				
RAGENS BLDG					X			
STACK		X						

SHEETS 9 & 10 ARE NOT APPLICABLE

NO.	DWG NO.	TITLE
3	BR-2001 SH3	MECHANICAL DRAWING INDEX
2	BR-2001 SH2	ABBREVIATIONS
1	BR-2001 SH1	MECHANICAL SYMBOLS

REFERENCES

CAD FILE NAME: BR 2013 S3 R75

REVISION 61 OF THIS DWG. WAS REDRAWN FROM PART OF BR-2013 SH3 REV. 36 & PART OF BR-2001 SH3 REV. 7.

REVISION 47 OF THIS DWG. WAS REDRAWN FROM PART OF BR-2013 SH.2 REV.46, BR-2013 SH.3 REV.48.

REVISION 56 OF THIS DWG. WAS TRANSLATED TO AUTOCAD FROM CADAM FILE: V:\E.801.21.0100.002-.640P

THIS IS A COMPUTER GENERATED DRAWING DO NOT REVISE IT MANUALLY

AmerGen

SERVICE AIR SYSTEM
FLOW DIAGRAM

N.CARLSON 02/06/01
D.ABBRUSCATO 02/06/01
N/A

OYSTER CREEK | DWG. NO. BR 2013 | SH. 2 OF 10 | REV. 75 | SCALE: NONE

PIMS # N/A

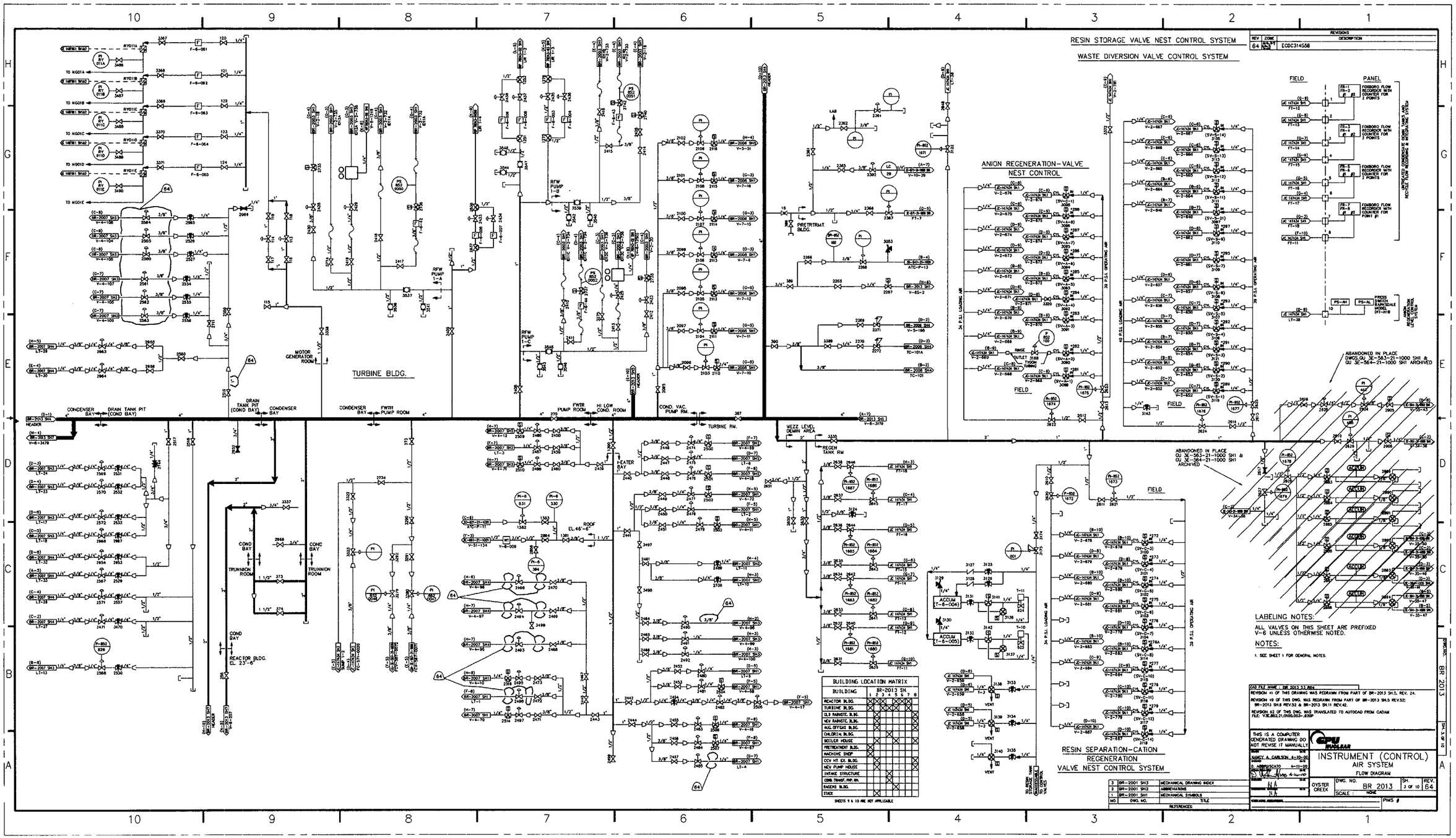
RESIN STORAGE VALVE NEST CONTROL SYSTEM
WASTE DIVERSION VALVE CONTROL SYSTEM
REVISIONS
REV ZONE DESCRIPTION
64 ECDC314558
TURBINE BLDG.
ANION REGENERATION-VALVE NEST CONTROL
RESIN SEPARATION-CATION REGENERATION VALVE NEST CONTROL SYSTEM
FIELD
PANEL
ABANDONED IN PLACE
LABELING NOTES:
ALL VALVES ON THIS SHEET ARE PREFIXED V-6 UNLESS OTHERWISE NOTED.
NOTES:
1. SEE SHEET 1 FOR GENERAL NOTES.
BUILDING LOCATION MATRIX
REACTOR BLDG.
TURBINE BLDG.
OLD RADWSTE. BLDG.
NEW RADWSTE. BLDG.
AUX. OPTGAS BLDG.
CHLORIN. BLDG.
BOILER HOUSE
PRETREATMENT BLDG.
MACHINE SHOP
CCW HT. EX. BLDG.
NEW PUMP HOUSE
INTAKE STRUCTURE
CONN. TRANSF. PAP. PR.
RADGAS BLDG.
STACK
SHEETS 9 & 10 ARE NOT APPLICABLE
THIS IS A COMPUTER GENERATED DRAWING DO NOT REVISE IT MANUALLY
GPU NUCLEAR
INSTRUMENT (CONTROL)
AIR SYSTEM
FLOW DIAGRAM
OYSTER CREEK
DWG. NO. BR 2013
SCALE: NONE
SH. 3 OF 10
REV. 64
PIMS #
REFERENCES:
3 BR-2001 SH3 MECHANICAL DRAWING INDEX
2 BR-2001 SH2 ABBREVIATIONS
1 BR-2001 SH1 MECHANICAL SYMBOLS
NO. DWG. NO. TITLE

REV.	ZONE	REVISIONS DESCRIPTION
57	F10	ECD C21 2009

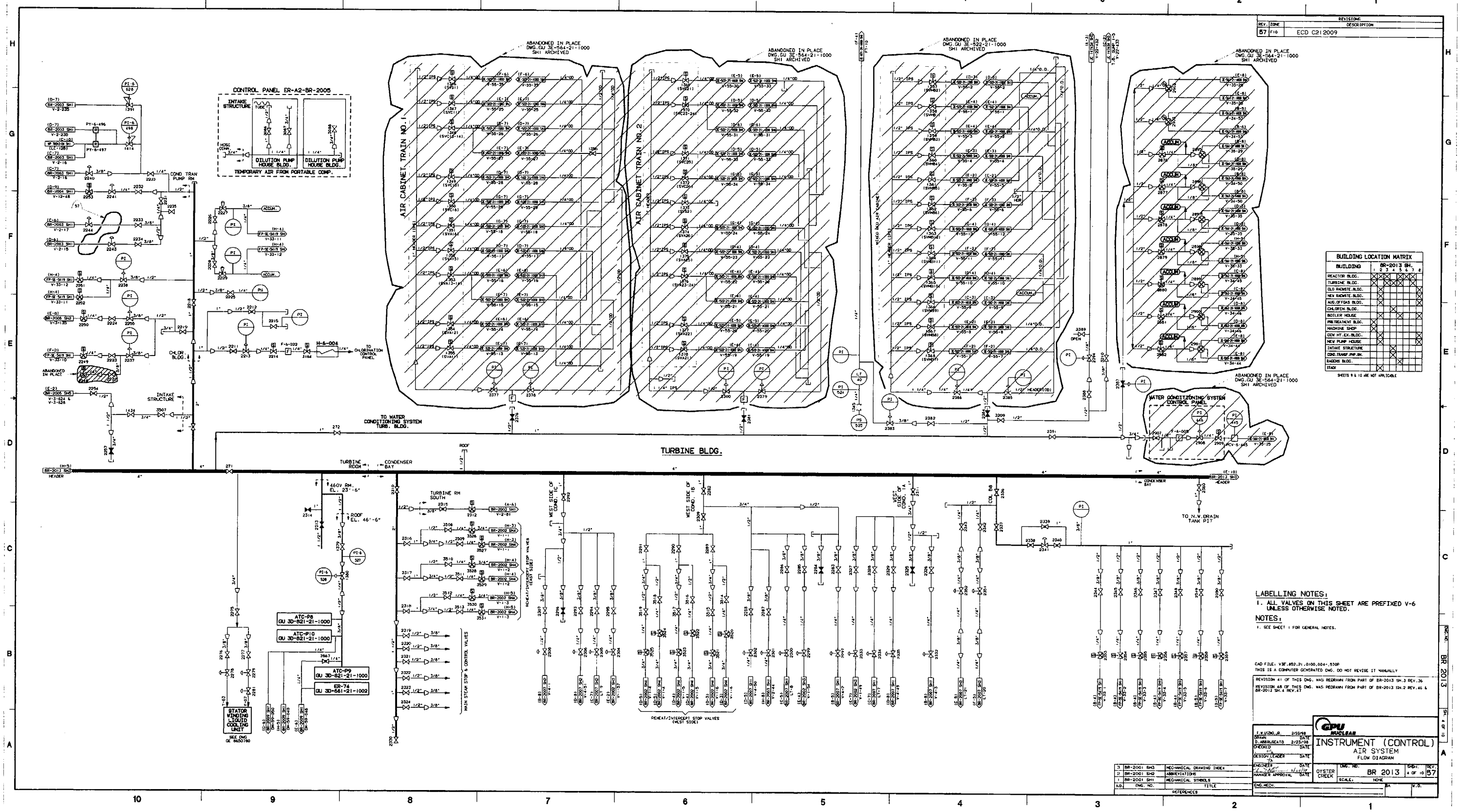

BUILDING LOCATION MATRIX							
BUILDING	BR-2013 SH. 1	2	3	4	5	6	7
REACTOR BLDG.	X	X	X	X	X	X	
TURBINE BLDG.	X	X	X	X	X		X
OLD RADWTE. BLDG.		X					X
NEW RADWTE. BLDG.		X					X
AUX.OFFGAS BLDG.		X					X
CHLORTN. BLDG.		X					X
BOILER HOUSE		X		X			X
PRETREATMENT BLDG.		X					
MACHINE SHOP		X					X
DCW HT.EX.BLDG.		X					
NEW PUMP HOUSE		X					X
INTAKE STRUCTURE		X					
COND.TRANSF.PMP.BH.		X					
RADCHEM BLDG.				X			
STACK		X	X	X	X	X	

SHEETS 9 & 10 ARE NOT APPLICABLE

LABELLING NOTES:

1. ALL VALVES ON THIS SHEET ARE PREFIXED V-6 UNLESS OTHERWISE NOTED.

NOTES:

1. SEE SHEET 1 FOR GENERAL NOTES.

CAD FILE: V3E.852.21.0100.004-.510P
THIS IS A COMPUTER GENERATED DWG. DO NOT REVISE IT MANUALLY

REVISION 41 OF THIS DWG. WAS REDRAWN FROM PART OF BR-2013 SH.3 REV.36
REVISION 48 OF THIS DWG. WAS REDRAWN FROM PART OF BR-2013 SH.2 REV.46 & BR-2013 SH.4 REV.47

REFERENCES		
3	BR-2001 SH3	MECHANICAL DRAWING INDEX
2	BR-2001 SH2	ABBREVIATIONS
1	BR-2001 SH1	MECHANICAL SYMBOLS
NO.	DWG. NO.	TITLE

DRAWN	T.W.VIZNO,Jr.	DATE 2/23/98
	D.ABRUSCATO	DATE 2/23/98
CHECKED		DATE
DESIGN LEADER		DATE
ENGINEER		DATE
MANAGER APPROVAL		DATE
ENG.MECH.		

GPU NUCLEAR

INSTRUMENT (CONTROL)
AIR SYSTEM
FLOW DIAGRAM

OYSTER CREEK	DWG. NO. BR 2013	SHT. 8 OF 10	REV. 57
	SCALE: NONE		
	BY		V.D.

BR 2013

REV	ZONE	DESCRIPTION
68	D-2	ECD C307472

STANDBY GAS TREATMENT CONTROL AIR SYSTEM

TURBINE BLDG.

REACTOR BLDG. CONTROL AIR SYSTEM

BOILER HOUSE CONTROL AIR SYSTEM

RADWASTE BLDG. CONTROL AIR SYSTEM

STEAMJET AIR EJECTOR CONTROL AIR SYSTEM

ATC-P16

ATC-P15

LABELLING NOTE:

ALL VALVES ON THIS SHEET ARE PREFIXED V-6 UNLESS OTHERWISE NOTED.

NOTES:

1. SEE SHEET 1 FOR GENERAL NOTES.

BUILDING LOCATION MATRIX

BUILDING	BR-2013 SH4						
	1	2	3	4	5	3	6
REACTOR BLDG.	X	X	X	X	X	X	
TURBINE BLDG.	X	X	X	X	X	X	
OLD RADWSTE. BLDG.			X				X
NEW RADWSTE. BLDG.			X				X
AUX. OFFGAS BLDG.			X				X
CHLORTIN. BLDG.			X				X
BOILER HOUSE	X			X			X
PRETREATMENT BLDG.	X						X
MACHINE SHOP	X						X
CRV HT. EX. BLDG.			X				
NEW PUMP HOUSE			X				
INTAKE STRUCTURE			X				
CONS.TRANSF. PAP. MA			X				
RADIOW. BLDG.			X	X			
STACK	X						

SHEETS 9 & 10 ARE NOT APPLICABLE

NO.	DWG. NO.	TITLE
3	BR-2001 SH3	MECHANICAL DRAWING INDEX
2	BR-2001 SH2	ABBREVIATIONS
1	BR-2001 SH1	MECHANICAL SYMBOLS

REFERENCES

CAD FILE NAME: BR 2013 S5.DGN

REVISION 41 OF THIS DWG. WAS REDRAWN FROM PART OF BR-2013 SH3 REV. 36 & PART OF BR-2011 SH2 REV. 7.

REVISION 53 OF THIS DWG. WAS REDRAWN FROM PART OF BR-2013 SH.2 REV.46; BR-2013 SH3 REV.52; BR-2013 SH.7 REV.50 & BR-2013 SH.9 REV.53.

REVISION 60 OF THIS DWG. WAS TRANSLATED TO AUTOCAD FROM CADAM FILE V:\E.852.21.01\CD.005-.600P

THIS IS A COMPUTER GENERATED DRAWING DO NOT REVISE IT MANUALLY.

DRAWN	R. CARLSON	06/24/00
CHECKED	D.ABRAHV/CATO	06/24/00
ENGINEER		
ENGINEERING MANAGER		

AmerGen

INSTRUMENT (CONTROL) AIR SYSTEM FLOW DIAGRAM

OYSTER CREEK | DWG. NO. BR 2013 | SH. 5 OF 10 | REV. 68

SCALE: NONE | PIMS # N/A

BR 2013 | SH. 5 OF 10 | REV. 68

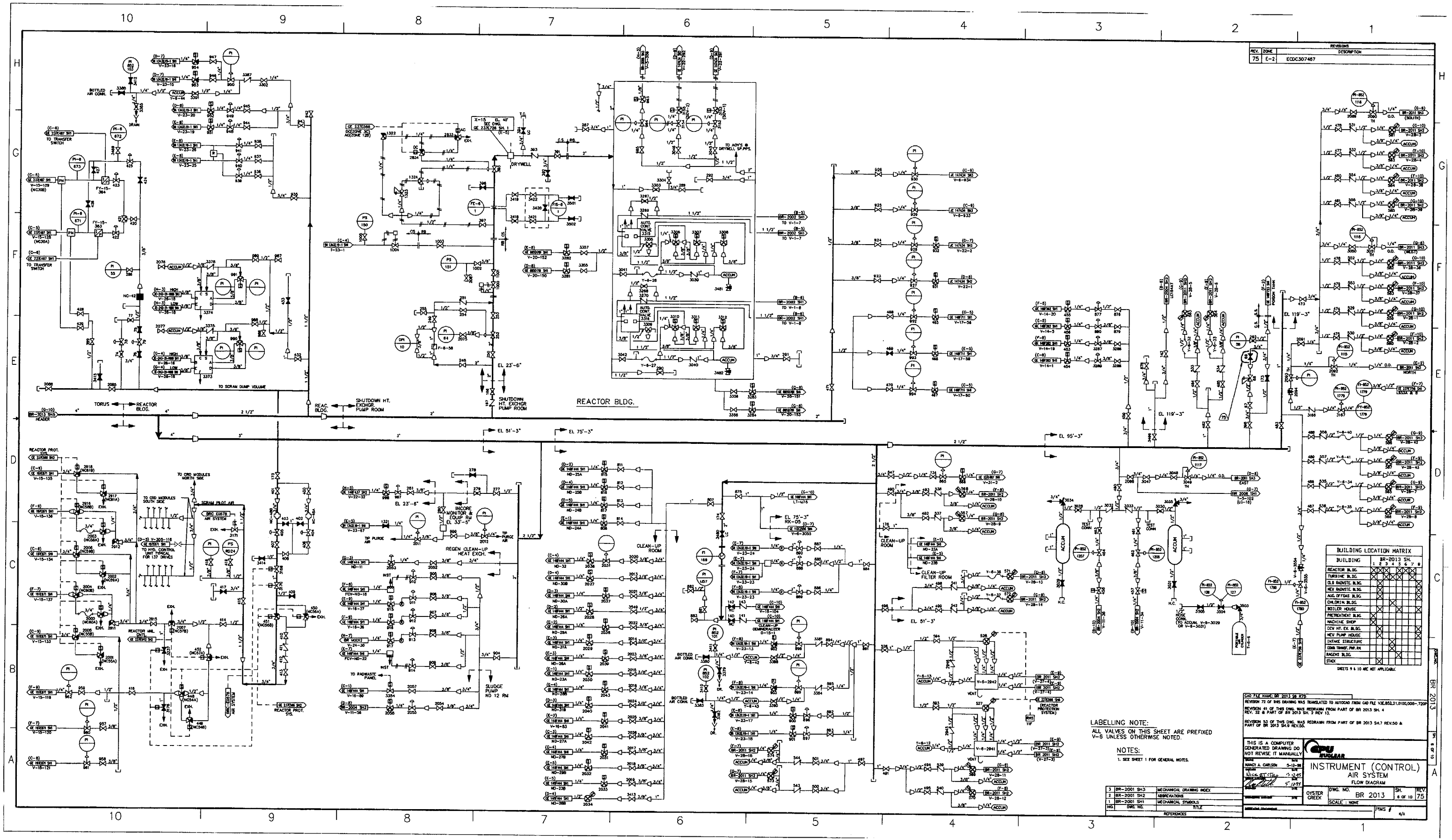
REACTOR BLDG.
DRYWELL
TORUS
REACTOR BLDG.
REAC. BLDG.
SHUTDOWN HT. EXCHGR. PUMP ROOM
SHUTDOWN HT. EXCHGR PUMP ROOM
EL 23'-6"
EL 51'-3"
EL 75'-3"
EL 95'-3"
EL 119'-3"
EL 23'-6"
EL 33'-5"
EL 75'-3"
EL 51'-3"
TO SCRAM DUMP VOLUME
TO CRD MODULES NORTH SIDE
TO CRD MODULES SOUTH SIDE
SCRAM PILOT AIR
REGEN CLEAN-UP HEAT EXCH.
SLUDGE PUMP NO 12 RW
CLEAN-UP ROOM
CLEAN-UP FILTER ROOM
REACTOR PROT. SYS.
REVISIONS
REV. ZONE DESCRIPTION
75 E-2 ECDC307467
BUILDING LOCATION MATRIX
BUILDING BR-2013 SH. 1 2 3 4 5 6 7 8
REACTOR BL DG.
TURBINE BL DG.
OLD RADWTE. BLDG.
NEW RADWTE. BLDG.
AUXL OFFGAS BLDG.
CHLORTN BLDG.
BOILER HOUSE
PRETREATMENT BLDG.
MACHINE SHOP
CON HT. EX. BLDG.
NEW PUMP HOUSE
INTAKE STRUCTURE
CONS TRANSF. PNP. RM.
RADWTS BLDG.
STACK
SHEETS 9 & 10 ARE NOT APPLICABLE
LABELLING NOTE:
ALL VALVES ON THIS SHEET ARE PREFIXED V-6 UNLESS OTHERWISE NOTED.
NOTES:
1. SEE SHEET 1 FOR GENERAL NOTES.
3 BR-2001 SH.3 MECHANICAL DRAWING INDEX
2 BR-2001 SH.2 ABBREVIATIONS
1 BR-2001 SH.1 MECHANICAL SYMBOLS
NO. DWG. NO. TITLE
REFERENCES
THIS IS A COMPUTER GENERATED DRAWING DO NOT REVISE IT MANUALLY
GPU NUCLEAR
INSTRUMENT (CONTROL) AIR SYSTEM
FLOW DIAGRAM
OYSTER CREEK
DWG. NO. BR 2013
SH. 6 OF 10
REV 75
SCALE : NONE
BR 2013

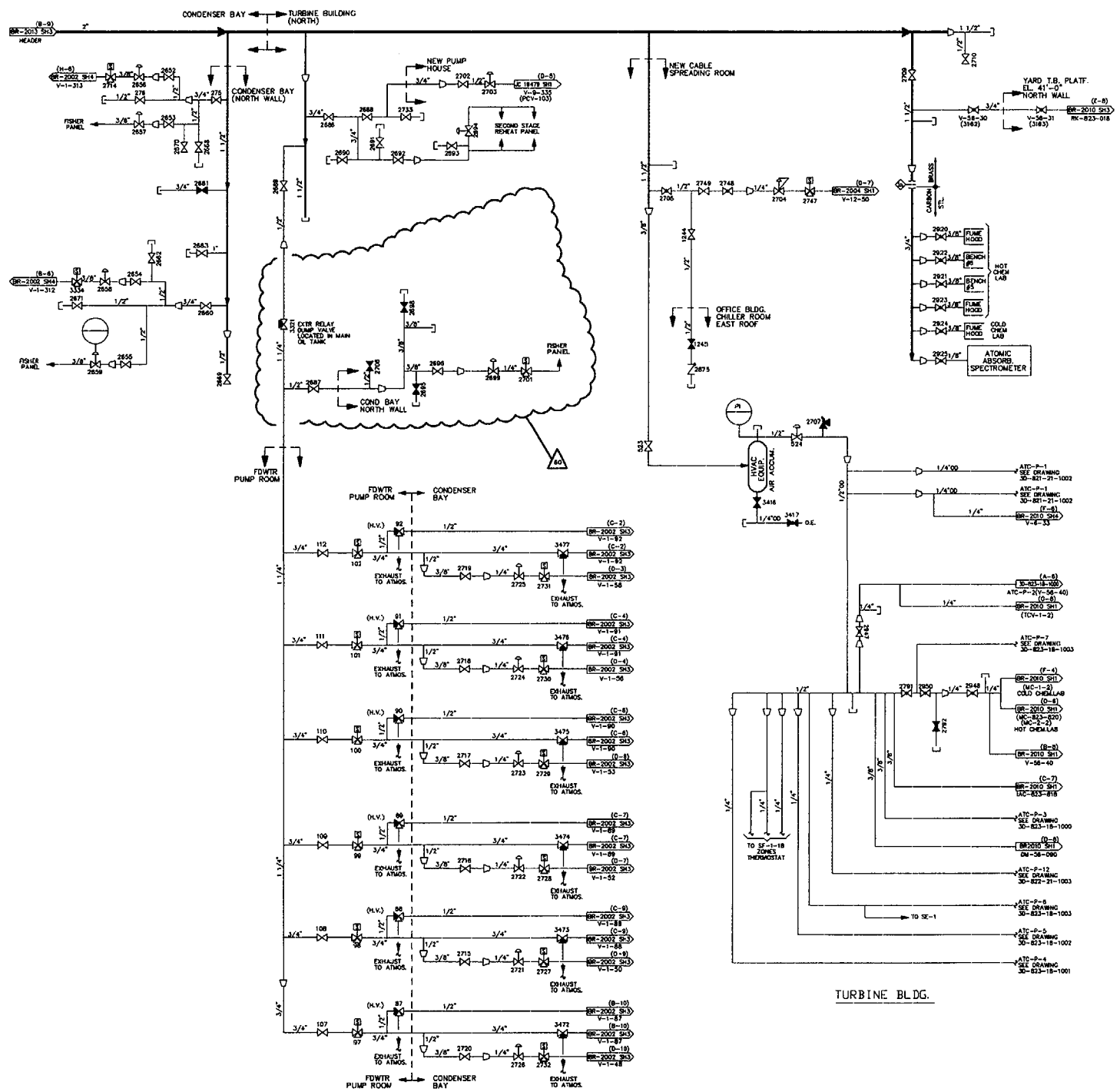

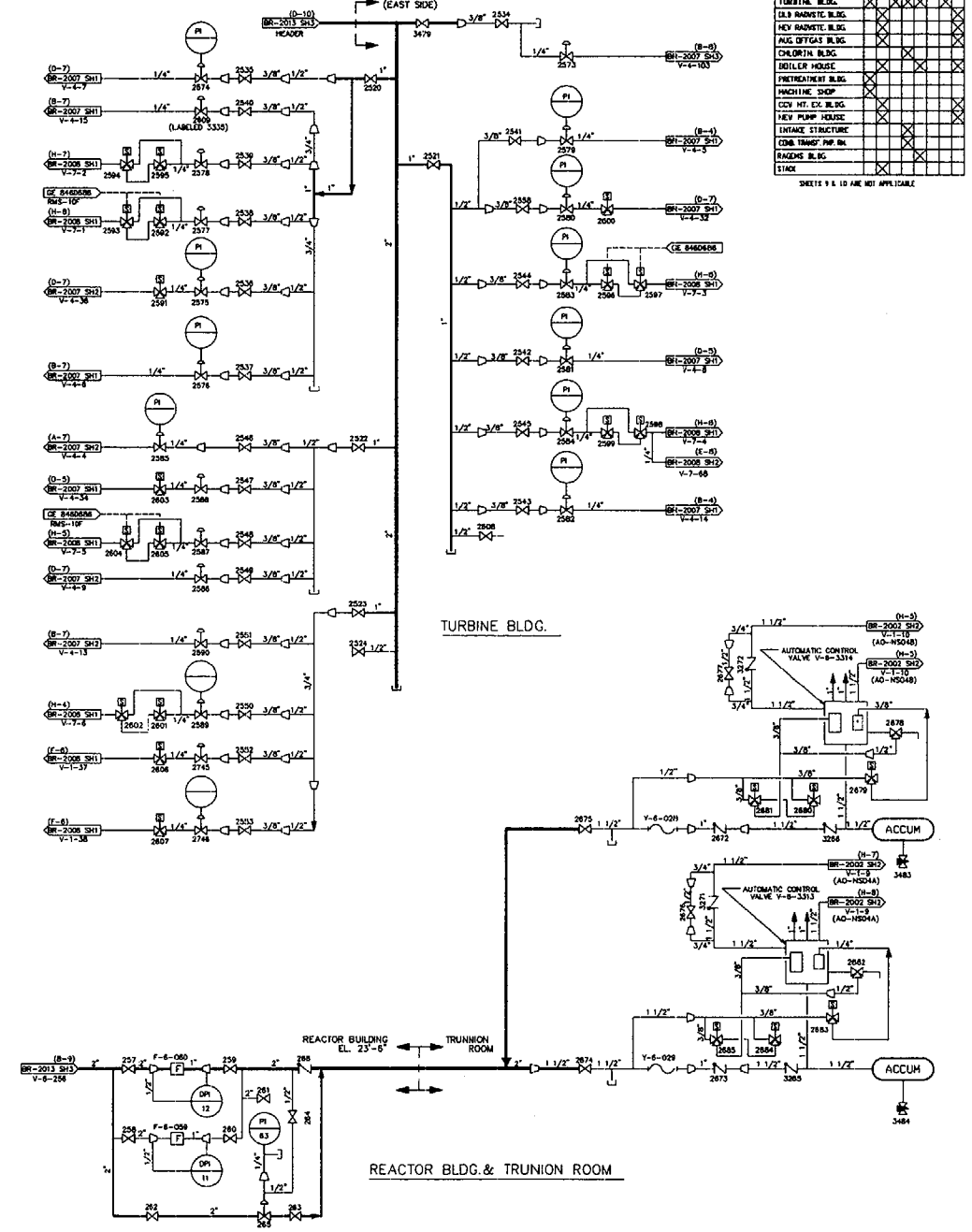

BUILDING LOCATION MATRIX								
BUILDING	BR-2013 SH. 1	2	3	4	5	6	7	8
REACTOR BLDG.	X	X	X		X	X	X	
TURBINE BLDG.	X	X	X	X	X	X	X	
OLD RADWSTE. BLDG.		X						X
NEW RADWSTE. BLDG.		X						X
AUG. OFFGAS BLDG.		X						X
CHLORTN BLDG.			X		X		X	
BOILER HOUSE		X			X		X	
PRETREATMENT BLDG.	X							
MACHINE SHOP	X							
CCW MT. EX. BLDG.		X						
NEW PUMP HOUSE		X						X
INTAKE STRUCTURE				X				
COAL TRANSF. PNP. BN.				X				
RADWSTE BLDG				X				
STACK	X							

SHEETS 9 & 10 ARE NOT APPLICABLE

REVISIONS		
REV	ZONE	DESCRIPTION
60	F-9	ECO C314564

LABELLING NOTES:
1. ALL VALVES ON THIS SHT. ARE PREFIXED V-6 UNLESS OTHERWISE NOTED.

NOTES:
1. SEE SHEET 1 FOR GENERAL NOTES.

CAD FILE NAME : BR 2013 S7.DGN
REVISION 58 OF THIS DWG. WAS TRANSLATED TO AUTOCAD FROM CADAM FILE V3E.852.21.0100.007-.580P
REVISION 41 OF THIS DWG. WAS REDRAWN FROM PART OF BR 2013 SH.5 REV.24.

THIS IS A COMPUTER GENERATED DRAWING DO NOT REVISE IT MANUALLY

DRAWN	R.CARLSON	05/03/00
CHECKED	D.ABBRUSCATO	05/03/00
MECH. ENGINEER		5/9/00
ELECTRICAL ENGINEER	N/A	
INSTRUMENT ENGINEER	N/A	

GPU NUCLEAR

INSTRUMENT (CONTROL)
AIR SYSTEM
FLOW DIAGRAM

OYSTER CREEK | DWG. NO. BR 2013 | SH. 7 OF 10 | REV. 60 | SCALE : NONE | PMS # N/A

NO.	DWG. NO.	TITLE
3	BR1-2001 SH3	MECHANICAL DRAWING INDEX
2	BR1-2001 SH2	ABBREVIATIONS
1	BR1-2001 SH1	MECHANICAL SYMBOLS

REFERENCES

DWG.NO. BR 2013 SH. 7 OF 10

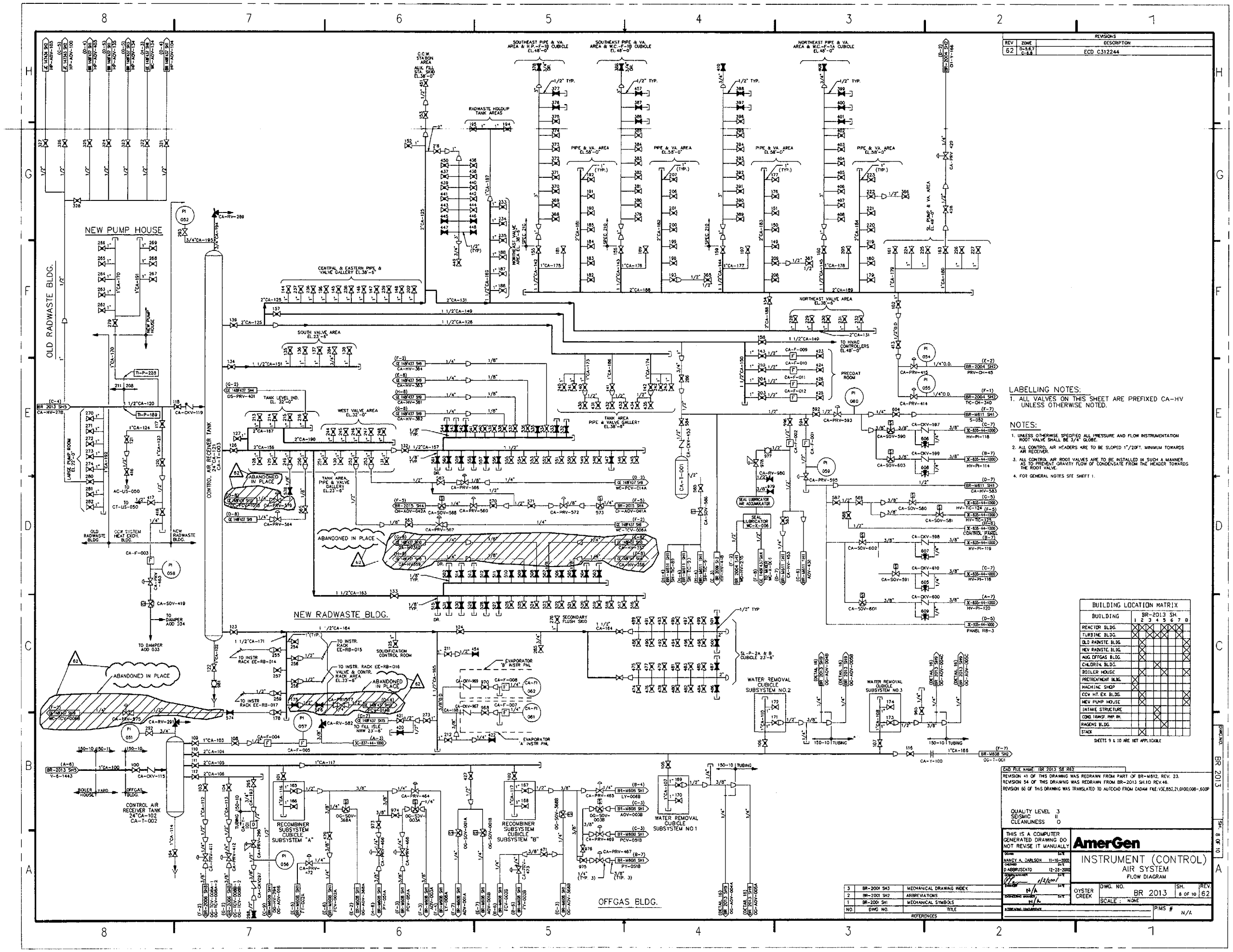

REVISIONS		
REV	ZONE	DESCRIPTION
62	D-3,5,6,7 C-6,8	ECD C312244

LABELLING NOTES:

1. ALL VALVES ON THIS SHEET ARE PREFIXED CA-HV UNLESS OTHERWISE NOTED.

NOTES:

1. UNLESS OTHERWISE SPECIFIED ALL PRESSURE AND FLOW INSTRUMENTATION ROOT VALVE SHALL BE 3/4" GLOBE.
2. ALL CONTROL AIR HEADERS ARE TO BE SLOPED 1"/20FT. MINIMUM TOWARDS AIR RECEIVER.
3. ALL CONTROL AIR ROOT VALVES ARE TO BE INSTALLED IN SUCH A MANNER AS TO PREVENT GRAVITY FLOW OF CONDENSATE FROM THE HEADER TOWARDS THE ROOT VALVE.
4. FOR GENERAL NOTES SEE SHEET 1.

BUILDING LOCATION MATRIX

BUILDING	BR-2013 SH. 1	2	3	4	5	6	7	8
REACTOR BLDG.	X	X	X		X	X	X	X
TURBINE BLDG.	X							X
OLD RADWSTE. BLDG.		X						X
NEW RADWSTE. BLDG.		X						X
AUX. OFFGAS BLDG.		X						X
CHLORINE BLDG.		X						X
BOILER HOUSE		X			X			X
PRETREATMENT BLDG.	X							
MACHINE SHOP	X							
CCW HT. EX. BLDG.		X						X
NEW PUMP HOUSE		X						X
INTAKE STRUCTURE		X						
COND TRANSF. PMP. RM.				X				
RAGENS BLDG.				X				
STACK		X						

SHEETS 9 & 10 ARE NOT APPLICABLE

CAD FILE NAME: BR 2013 S8 R62

REVISION 43 OF THIS DRAWING WAS REDRAWN FROM PART OF BR-M612, REV. 23.
REVISION 54 OF THIS DRAWING WAS REDRAWN FROM BR-2013 SH10 REV.46.
REVISION 56 OF THIS DRAWING WAS TRANSLATED TO AUTOCAD FROM CADAM FILE:V3E,B5C,21,0100,008-.600P

QUALITY LEVEL 3
SEISMIC "
CLEANLINESS D

THIS IS A COMPUTER GENERATED DRAWING DO NOT REVISE IT MANUALLY

DRAWN	N/A	
NANCY A. CARLSON	11-16-2000	
CHECKED	N/A	
D ABRUSCATO	12-13-2000	
SUPERVISOR	N/A	
	1/12/2001	
ENGINEERING MANAGER	N/A	
	N/A	
ENGINEERING CONCURRENCE		

AmerGen

INSTRUMENT (CONTROL) AIR SYSTEM FLOW DIAGRAM

OYSTER CREEK | DWG. NO. BR 2013 | SH. 8 of 10 | REV 62 | SCALE : NONE

PIMS # N/A

DWG.NO. BR 2013 SH. 8 OF 10

NO.	DWG NO.	TITLE
3	BR-2001 SH3	MECHANICAL DRAWING INDEX
2	BR-2001 SH2	ABBREVIATIONS
1	BR-2001 SH1	MECHANICAL SYMBOLS

REFERENCES

REVISIONS		
REV.	ZONE	DESCRIPTION
57		ADMINISTRATIVE CHANGE

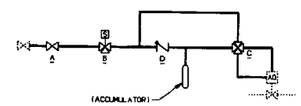

DETAIL 1

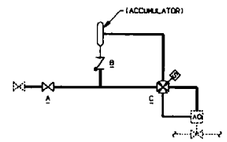

DETAIL 2

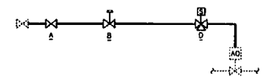

DETAIL 3

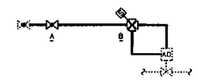

DETAIL 4

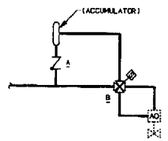

DETAIL 5

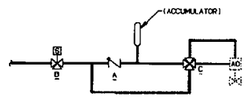

DETAIL 6

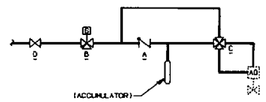

DETAIL 7

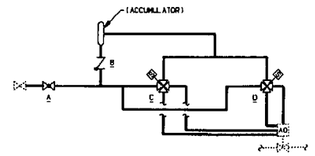

DETAIL 8

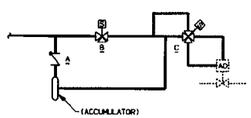

DETAIL 9

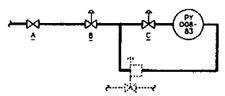

DETAIL 10

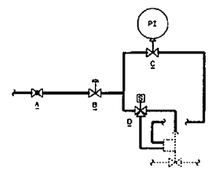

DETAIL 11

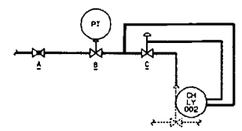

DETAIL 12

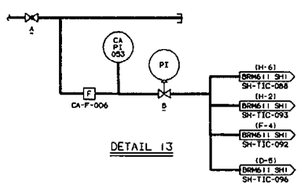

DETAIL 13

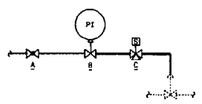

DETAIL 14

DETAIL 16

DETAIL 17

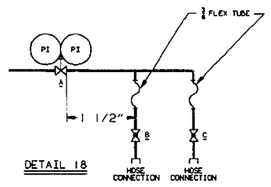

DETAIL 18

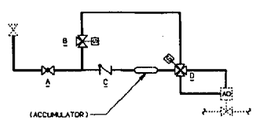

DETAIL 19

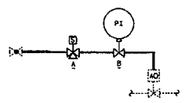

DETAIL 20

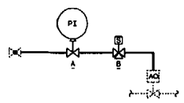

DETAIL 21

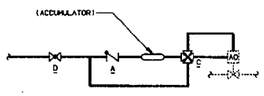

DETAIL 22

NOTES:

1. SEE SHEET 1 FOR GENERAL NOTES.
2. WORK THIS DRAWING WITH BR 2013 SH.10.

BUILDING LOCATION MATRIX								
BUILDING	BR-2013 SH.							
	1	2	3	4	5	6	7	8
REACTOR BLDG.	X	X	X		X	X	X	
TURBINE BLDG.	X		X	X	X	X		
OLD RADWSTE.BLDG.		X						X
NEW RADWSTE.BLDG.		X						X
AUG.OFFGAS BLDG.		X						X
CHLORIN.BLDG.					X			
BOILER HOUSE		X				X		X
PRETREATMENT BLDG.	X							
MACHINE SHOP	X							
CCW HT.EX.BLDG.								X
NEW PUMP HOUSE		X						X
INTAKE STRUCTURE					X			
COND.TRANSF.PMP.BH.					X			
RADEMS BLDG.						X		
STACK		X						

SHEETS 9 & 10 ARE NOT APPLICABLE

CAD FILE:V3E.857,21,0100,009-,570!
THIS IS A COMPUTER GENERATED DWG. DO NOT REVISE IT MANUALLY

REVISION 41 OF THIS DRAWING WAS REDRAWN FROM GU 3E-857-21-1000 SH1 REV2

REVISION 56 OF THIS DRAWING WAS REDRAWN FROM BR 2013 SH.12 REV.41.

ORIGINAL DRAWING OUT OF ARC. DATE ____

NO.	DWG. NO.	TITLE
3	BR-2001 SH3	MECHANICAL DRAWING INDEX
2	BR-2001 SH2	ABBREVIATIONS
1	BR-2001 SH1	MECHANICAL SYMBOLS

REFERENCES

R.A.KOCH 04/06/93 DRAWN DATE
N.TITOLO 04/07/93 CHECKED DATE
DESIGN LEADER DATE
ENGINEER DATE
MANAGER APPROVAL DATE

GPU Nuclear/BR

INSTRUMENT (CONTROL) AIR SYSTEM
(FLUID DETAILS NEW RADWASTE)
FLOW DIAGRAM

OYSTER CREEK

DWG. NO. BR 2013 SH. 9 OF 10 REV. 57

SCALE: NONE

ENG.MECH. BA TASK

DOC.NO. BR 2013 SH. 9 OF 10

ROOT VALVE NO.	DETAIL NO.	A	B	C	D	AO VALVE	REMARKS
CA-HV-177	1	CA-HV-611	SA-SOV-010A	CA-ADV-615	CA-CKV-614	SA-ADV-010A	
CA-HV-190	1	CA-HV-612	SA-SOV-010B	CA-ADV-616	CA-CKV-619	SA-ADV-010B	
CA-HV-176	1	CA-HV-617	SA-SOV-011A	CA-ADV-621	CA-CKV-620	SA-ADV-011A	
CA-HV-184	1	CA-HV-618	SA-SOV-011B	CA-ADV-622	CA-CKV-625	SA-ADV-011B	
CA-HV-150	1	CA-HV-623	SA-SOV-012A	CA-ADV-627	CA-CKV-626	SA-ADV-012A	
CA-HV-183	1	CA-HV-624	SA-SOV-012B	CA-ADV-628	CA-CKV-631	SA-ADV-012B	
CA-HV-149	2	CA-HV-629	CA-CKV-632	SA-SOV-017A		SA-ADV-017A	
CA-HV-191	2	CA-HV-630	CA-CKV-635	SA-SOV-017B		SA-ADV-017B	
CA-HV-208	1	CA-HV-633	SA-SOV-019A	CA-ADV-637	CA-CKV-636	SA-ADV-019A	
CA-HV-192	1	CA-HV-634	SA-SOV-019B	CA-ADV-638	CA-CKV-641	SA-ADV-019B	
CA-HV-151	2	CA-HV-639	CA-CKV-642	CH-SOV-012A		CH-ADV-012A	
CA-HV-185	2	CA-HV-640	CA-CKV-643	CH-SOV-012B		CH-ADV-012B	
CA-HV-179	1	CA-HV-646	SA-SOV-013A	CA-ADV-650	CA-CKV-644	SA-ADV-013A	
CA-HV-180	1	CA-HV-652	SA-SOV-014A	CA-ADV-656	CA-CKV-645	SA-ADV-014A	
CA-HV-219	1	CA-HV-658	SA-SOV-015A	CA-ADV-662	CA-CKV-648	SA-ADV-015A	
CA-HV-220	1	CA-HV-664	SA-SOV-016A	CA-ADV-668	CA-CKV-649	SA-ADV-016A	
CA-HV-221	2	CA-HV-670	CA-CKV-654	SA-SOV-018A		SA-ADV-018A	
CA-HV-223	2	CA-HV-674	CA-CKV-655	CH-SOV-013A		CH-ADV-013A	
CA-HV-198	1	CA-HV-647	SA-SOV-013B	CA-ADV-651	CA-CKV-660	SA-ADV-013B	
CA-HV-199	1	CA-HV-653	SA-SOV-014B	CA-ADV-657	CA-CKV-661	SA-ADV-014B	
CA-HV-200	1	CA-HV-659	SA-SOV-015B	CA-ADV-663	CA-CKV-666	SA-ADV-015B	
CA-HV-206	1	CA-HV-665	SA-SOV-016B	CA-ADV-669	CA-CKV-667	SA-ADV-016B	
CA-HV-207	2	CA-HV-671	CA-CKV-672	SA-SOV-018B		SA-ADV-018B	
CA-HV-201	2	CA-HV-675	CA-CKV-673	CH-SOV-013B		CH-ADV-013B	
CA-HV-368	2	CA-HV-678	CA-CKV-676	HP-SOV-014B		HP-ADV-014B	
CA-HV-369	2	CA-HV-680	CA-CKV-677	HP-SOV-016B		HP-ADV-016B	
CA-HV-370	2	CA-HV-681	CA-CKV-679	HP-SOV-017B		HP-ADV-017B	
CA-HV-371	2	CA-HV-682	CA-CKV-687	HP-SOV-026B		HP-ADV-026B	
CA-HV-372	2	CA-HV-683	CA-CKV-689	HP-SOV-016B		HP-ADV-016B	
CA-HV-373	2	CA-HV-688	CA-CKV-691	HP-SOV-025B		HP-ADV-025B	
CA-HV-374	2	CA-HV-690	CA-CKV-695	HP-SOV-015B		HP-ADV-015B	
CA-HV-375	3	CA-HV-692	CA-PRV-693		HP-SOV-003B	HP-FCV-003B	
CA-HV-181	4	CA-HV-684	HP-SOV-027B			HP-ADV-027B	
CA-HV-379	2	CA-HV-685	CA-CKV-697	WC-SOV-026B		WC-ADV-026B	
CA-HV-380	2	CA-HV-686	CA-CKV-699	WC-SOV-030B		WC-ADV-030B	
CA-HV-381	2	CA-HV-694	CA-CKV-701	WC-SOV-029B		WC-ADV-029B	
CA-HV-382	2	CA-HV-696	CA-CKV-703	WC-SOV-031B		WC-ADV-031B	
CA-HV-383	2	CA-HV-698	CA-CKV-705	WC-SOV-025B		WC-ADV-025B	
CA-HV-384	2	CA-HV-700	CA-CKV-723	WC-SOV-027B		WC-ADV-027B	
CA-HV-385	2	CA-HV-702	CA-CKV-724	WC-SOV-028B		WC-ADV-028B	
CA-HV-189	4	CA-HV-704	WC-SOV-039B			WC-ADV-039B	
CA-HV-389	2	CA-HV-706	CA-CKV-725	HP-SOV-015A		HP-ADV-015A	
CA-HV-390	2	CA-HV-707	CA-CKV-726	HP-SOV-017A		HP-ADV-017A	
CA-HV-391	2	CA-HV-708	CA-CKV-727	HP-SOV-018A		HP-ADV-018A	
CA-HV-392	2	CA-HV-709	CA-CKV-728	HP-SOV-026A		HP-ADV-026A	
CA-HV-393	2	CA-HV-710	CA-CKV-729	HP-SOV-014A		HP-ADV-014A	
CA-HV-394	3	CA-HV-711	CA-PRV-714		HP-SOV-003A	HP-FCV-003A	
CA-HV-395	2	CA-HV-712	CA-CKV-730	HP-SOV-025A		HP-ADV-025A	
CA-HV-396	2	CA-HV-713	CA-CKV-731	HP-SOV-016A		HP-ADV-016A	
CA-HV-205	4	CA-HV-715	WC-SOV-039A			WC-ADV-039A	
CA-HV-402	2	CA-HV-716	CA-CKV-732	WC-SOV-030A		WC-ADV-030A	
CA-HV-403	2	CA-HV-717	CA-CKV-733	WC-SOV-031A		WC-ADV-031A	
CA-HV-404	2	CA-HV-718	CA-CKV-734	WC-SOV-029A		WC-ADV-029A	
CA-HV-405	2	CA-HV-719	CA-CKV-735	WC-SOV-027A		WC-ADV-027A	
CA-HV-406	2	CA-HV-720	CA-CKV-736	WC-SOV-026A		WC-ADV-026A	
CA-HV-407	2	CA-HV-721	CA-CKV-737	WC-SOV-025A		WC-ADV-025A	
CA-HV-408	2	CA-HV-722	CA-CKV-738	WC-SOV-028A		WC-ADV-028A	
CA-HV-197	4	CA-HV-813	HP-SOV-027A			HP-ADV-027A	
CA-HV-425	5	CA-DKV-739	CH-SOV-015			CH-ADV-015	
CA-HV-425	5	CA-DKV-740	WC-SOV-032A			WC-ADV-032A	
CA-HV-425	5	CA-DKV-741	WC-SOV-032B			WC-ADV-032B	
CA-HV-425	5	CA-DKV-742	WC-SOV-033A			WC-ADV-033A	
CA-HV-425	5	CA-DKV-743	WC-SOV-033B			WC-ADV-033B	
CA-HV-426	6	CA-DKV-744	CH-SOV-014			CH-ADV-014	
CA-HV-426	6	CA-DKV-745	CH-SOV-016A	CA-ADV-767		CH-ADV-016A	
CA-HV-426	6	CA-DKV-746	CH-SOV-016B	CA-ADV-768		CH-ADV-016B	
CA-HV-426	7	CA-DKV-747	WC-SOV-034A	CA-ADV-769	CA-ADV-783	WC-ADV-034A	
CA-HV-426	22	CA-DKV-748	WC-SOV-034B	CA-ADV-770	CA-HV-971	WC-ADV-034B	
CA-HV-426	6	CA-DKV-749	WC-SOV-035A	CA-ADV-771		WC-ADV-035A	
CA-HV-426	6	CA-DKV-750	WC-SOV-035B	CA-ADV-772		WC-ADV-035B	
CA-HV-426	6	CA-DKV-751	WC-SOV-036A	CA-ADV-773		WC-ADV-036A	
CA-HV-426	6	CA-DKV-752	WC-SOV-036B	CA-ADV-774		WC-ADV-036B	
CA-HV-424	5	CA-DKV-753	CH-SOV-020			CH-ADV-020	
CA-HV-424	5	CA-DKV-754	HP-SOV-020A			HP-ADV-020A	
CA-HV-424	5	CA-DKV-755	HP-SOV-020B			HP-ADV-020B	
CA-HV-424	5	CA-DKV-756	HP-SOV-021A			HP-ADV-021A	
CA-HV-424	5	CA-DKV-757	HP-SOV-021B			HP-ADV-021B	
CA-HV-423	5	CA-DKV-758	CH-SOV-019			CH-ADV-019	
CA-HV-423	6	CA-DKV-759	CH-SOV-021A	CA-ADV-775		CH-ADV-021A	
CA-HV-423	6	CA-DKV-760	CH-SOV-021B	CA-ADV-776		CH-ADV-021B	

ROOT VALVE NO.	DETAIL NO.	A	B	C	D	AO VALVE	REMARKS
CA-HV-423	6	CA-CKV-761	HP-SOV-022A	CA-ADV-777		HP-ADV-022A	
CA-HV-423	6	CA-CKV-762	HP-SOV-022B	CA-ADV-778		HP-ADV-022B	
CA-HV-423	6	CA-CKV-763	HP-SOV-023A	CA-ADV-779		HP-ADV-023A	
CA-HV-423	6	CA-CKV-764	HP-SOV-023B	CA-ADV-780		HP-ADV-023B	
CA-HV-423	6	CA-CKV-765	HP-SOV-024A	CA-ADV-781		HP-ADV-024A	
CA-HV-423	6	CA-CKV-766	HP-SOV-024B	CA-ADV-782		HP-ADV-024B	
CA-HV-430	2	CA-HV-784	CA-CKV-785				
CA-HV-431	1		NC-SOV-019A	CA-ADV-786	CA-CKV-793	NC-ADV-019A	
CA-HV-432	2	CA-HV-787	CA-CKV-788				
CA-HV-433	1		NC-SOV-019B	CA-ADV-789	CA-CKV-794	NC-ADV-019B	
CA-HV-434	1		NC-SOV-019C	CA-ADV-790	CA-CKV-795	NC-ADV-019C	
CA-HV-435	2	CA-HV-791	CA-CKV-792				
CA-HV-186	2	CA-HV-796	CA-CKV-797	CH-SOV-010B		CH-ADV-010B	
CA-HV-187	2	CA-HV-798	CA-CKV-799	CH-SOV-010A		CH-ADV-010A	
CA-HV-240	8	CA-HV-800	CA-CKV-801	WC-SOV-037B-1	WC-SOV-037B-2	WC-ADV-037B	
CA-HV-243	8	CA-HV-802	CA-CKV-803	WC-SOV-037A-1	WC-SOV-037A-2	WC-ADV-037A	
CA-HV-241	2	CA-HV-804	CA-CKV-805	WC-SOV-038B		WC-ADV-038B	
CA-HV-242	2	CA-HV-806	CA-CKV-807	WC-SOV-038A		WC-ADV-038A	
CA-HV-438	2	CA-HV-821	CA-CKV-831	SL-SOV-002A		SL-ADV-002A	
CA-HV-441	2	CA-HV-822	CA-CKV-832	SL-SOV-002B		SL-ADV-002B	
CA-HV-436	2	CA-HV-823	CA-CKV-833	SL-SOV-003A		SL-ADV-003A	
CA-HV-440	2	CA-HV-824	CA-CKV-834	SL-SOV-003B		SL-ADV-003B	
CA-HV-443	2	CA-HV-825	CA-CKV-835	SL-SOV-012A		SL-ADV-012A	
CA-HV-444	2	CA-HV-826	CA-CKV-836	SL-SOV-012B		SL-ADV-012B	
CA-HV-441	2	CA-HV-827	CA-CKV-837	SL-SOV-014		SL-ADV-014	
CA-HV-437	2	CA-HV-828	CA-CKV-838	SL-SOV-015		SL-ADV-015	
CA-HV-450	2	CA-HV-829	CA-CKV-839	CH-SOV-011A		CH-ADV-011A	
CA-HV-444	2	CA-HV-830	CA-CKV-840	CH-SOV-011B		CH-ADV-011B	
	9	CA-CKV-841	SL-SOV-022-1	SL-SOV-022-2		SL-ADV-022	
	9	CA-CKV-842	SL-SOV-035-1	SL-SOV-035-2		SL-ADV-035	
	9	CA-CKV-843	SL-SOV-036-1	SL-SOV-036-2		SL-ADV-036	
CA-HV-257	10	CA-HV-844	CA-PRV-845	CA-PRV-846		SH-PCV-008D	
CA-HV-251	11	CA-HV-847	CA-PRV-848	CA-PRV-849		SH-PCV-008A	
CA-HV-254	12	CA-HV-850	CA-PRV-851	CA-PRV-852		CH-LCV-002	
CA-HV-254	13	CA-HV-853	CA-PRV-854				TO THERMOSTATS
CA-HV-254	14	CA-HV-855	CA-PRV-856	CH-SOV-041B		CH-ADV-041B	
CA-HV-254	14	CA-HV-857	CA-PRV-858	CH-SOV-042B		CH-ADV-042B	
CA-HV-169	16	OG-SOV-004A				OG-ADV-004A	
CA-HV-171	16	OG-SOV-004B				OG-ADV-004B	
CA-HV-173	16	OG-SOV-004C				OG-ADV-004C	
CA-HV-169	16	OG-SOV-005A				OG-ADV-005A	
CA-HV-171	16	OG-SOV-005B				OG-ADV-005B	
CA-HV-173	16	OG-SOV-005C				OG-ADV-005C	
CA-HV-298	17	CA-PRV-862	CA-HV-863				TO EE-08-003
CA-HV-298	17	CA-PRV-864	CA-HV-865				TO F2T-065
CA-HV-298	18	CA-PRV-866	CA-HV-867	CA-HV-868			
CA-HV-298	18	CA-PRV-869	CA-HV-870	CA-HV-871			
CA-HV-474	4	CA-HV-872	SL-SOV-024A			SL-ADV-024A	
CA-HV-475	4	CA-HV-873	SL-SOV-030			SL-ADV-030	
CA-HV-476	4	CA-HV-874	SL-SOV-026A			SL-ADV-026A	
CA-HV-477	4	CA-HV-875	SL-SOV-029A			SL-HV-029A	SEE NOTE 3
CA-HV-478	4	CA-HV-876	SL-SOV-028A			SL-ADV-028A	
CA-HV-479	4	CA-HV-877	SL-SOV-027A			SL-ADV-027A	
CA-HV-480	19	CA-HV-878	CH-SOV-031A-1	CA-CKV-879	CH-SOV-031A-2	CH-ADV-031A	
CA-HV-481	19	CA-HV-880	CH-SOV-030A-1	CA-CKV-881	CH-SOV-030A-2	CH-ADV-030A	
CA-HV-482	19	CA-HV-882	CH-SOV-029A-1	CA-CKV-883	CH-SOV-029A-2	CH-ADV-029A	
CA-HV-483	19	CA-HV-884	SL-SOV-025A-1	CA-CKV-885	SL-SOV-025A-2	SL-ADV-025A	
CA-HV-484	19	CA-HV-886	SL-SOV-023A-1	CA-CKV-887	SL-SOV-023A-2	SL-ADV-023A	
CA-HV-485	19	CA-HV-888	SL-SOV-021A-1	CA-CKV-889	SL-SOV-021A-2	SL-ADV-021A	
CA-HV-488	4	CA-HV-890	SL-SOV-024B			SL-ADV-024B	
CA-HV-489	4	CA-HV-891	SL-SOV-031			SL-ADV-031	
CA-HV-490	4	CA-HV-892	SL-SOV-026B			SL-ADV-026B	
CA-HV-491	4	CA-HV-893	SL-SOV-029B			SL-ADV-029B	
CA-HV-492	4	CA-HV-894	SL-SOV-028B			SL-ADV-028B	
CA-HV-493	4	CA-HV-895	SL-SOV-027B			SL-ADV-027B	
CA-HV-494	19	CA-HV-896	CH-SOV-031B-1	CA-CKV-897	CH-SOV-031B-2	CH-ADV-031B	
CA-HV-495	19	CA-HV-898	CH-SOV-030B-1	CA-CKV-899	CH-SOV-030B-2	CH-ADV-030B	
CA-HV-496	19	CA-HV-900	CH-SOV-029B-1	CA-CKV-901	CH-SOV-029B-2	CH-ADV-029B	
CA-HV-497	19	CA-HV-902	SL-SOV-025B-1	CA-CKV-903	SL-SOV-025B-2	SL-ADV-025B	
CA-HV-498	19	CA-HV-904	SL-SOV-023B-1	CA-CKV-905	SL-SOV-023B-2	SL-ADV-023B	
CA-HV-499	19	CA-HV-906	SL-SOV-021B-1	CA-CKV-907	SL-SOV-021B-2	SL-ADV-021B	
CA-HV-421	5						
	2	CA-HV-909	CA-CKV-910	HP-SOV-001A		HP-ADV-001A	
	2	CA-HV-911	CA-CKV-912	HP-SOV-002A		HP-ADV-002A	
	2	CA-HV-913	CA-CKV-914	HP-SOV-002B		HP-ADV-002B	
CA-HV-525	20	WC-SOV-016B	CA-PRV-915			WC-ADV-016B	
CA-HV-521	20	WC-SOV-017B	CA-PRV-916			WC-ADV-017B	
CA-HV-520	20	WC-SOV-018B	CA-PRV-917			WC-ADV-018B	
CA-HV-522	20	WC-SOV-019B	CA-PRV-918			WC-ADV-019B	
CA-HV-526	20	WC-SOV-020B	CA-PRV-919			WC-ADV-020B	

ROOT VALVE NO.	DETAIL NO.	A	B	C	D	AO VALVE	REMARKS
CA-HV-519	20	WC-SOV-022B	CA-PRV-920			WC-ADV-022B	
CA-HV-523	20	WC-SOV-015B	CA-PRV-921			WC-ADV-015B	
CA-HV-517	20	WC-SOV-008B	CA-PRV-922			WC-ADV-008B	
CA-HV-518	20	WC-SOV-021B	CA-PRV-923			WC-ADV-021B	
CA-HV-516	20	WC-SOV-011B	CA-PRV-924			WC-ADV-011B	
CA-HV-524	20	SH-SOV-013B	CA-PRV-925			SH-ADV-013B	
CA-HV-545	20	WC-SOV-011A	CA-PRV-926			WC-ADV-011A	
CA-HV-546	20	WC-SOV-008A	CA-PRV-927			WC-ADV-008A	
CA-HV-549	20	WC-SOV-018A	CA-PRV-929			WC-ADV-018A	
CA-HV-550	20	WC-SOV-017A	CA-PRV-930			WC-ADV-017A	
CA-HV-551	20	WC-SOV-019A	CA-PRV-931			WC-ADV-019A	
CA-HV-552	20	WC-SOV-015A	CA-PRV-932			WC-ADV-015A	
CA-HV-553	20	SH-SOV-013A	CA-PRV-933			SH-ADV-013A	
CA-HV-554	20	WC-SOV-016A	CA-PRV-934			WC-ADV-016A	
CA-HV-555	20	WC-SOV-020A	CA-PRV-935			WC-ADV-020A	
CA-HV-546	21	CA-PRV-936	WC-SOV-022A			WC-ADV-022A	
CA-HV-233	2	CA-HV-961	CA-CKV-937	SL-SOV-011B		SL-ADV-011B	
CA-HV-234	2	CA-HV-962	CA-CKV-938	SL-SOV-011A		SL-ADV-011A	
CA-HV-235	2	CA-HV-963	CA-CKV-939	SL-SOV-006B		SL-ADV-006B	
CA-HV-188	2	CA-HV-964	CA-CKV-940	SL-SOV-006A		SL-ADV-006A	
CA-HV-238	2	CA-HV-951	CA-CKV-941	SA-SOV-001A		SA-ADV-001A	
CA-HV-202	2	CA-HV-952	CA-CKV-942	SA-SOV-001B		SA-ADV-001B	
CA-HV-145	2	CA-HV-953	CA-CKV-943	SA-SOV-002A		SA-ADV-002A	
CA-HV-239	2	CA-HV-954	CA-CKV-944	SA-SOV-002B		SA-ADV-002B	
CA-HV-236	2	CA-HV-955	CA-CKV-945	SL-SOV-004A		SA-ADV-004A	
CA-HV-237	2	CA-HV-956	CA-CKV-946	SL-SOV-004B		SA-ADV-004B	
CA-HV-146	2	CA-HV-957	CA-CKV-947	SL-SOV-005A		SL-ADV-005A	
CA-HV-148	2	CA-HV-958	CA-CKV-948	SL-SOV-005B		SL-ADV-005B	
CA-HV-196	2	CA-HV-959	CA-CKV-949	SL-SOV-013A		SL-ADV-013A	
CA-HV-147	2	CA-HV-960	CA-CKV-950	SL-SOV-013B		SL-ADV-013B	

REV.	ZONE	REVISIONS DESCRIPTION
52	D-2	ADMINISTRATIVE CHANGE PER CMT 187058

NOTES:

1. SEE SHEET 1 FOR GENERAL NOTES.
2. WORK THIS DRAWING WITH BR 2013 SH 9.
3. SL-ADV-029A IS NOW MANUAL VALVE SL-HV-029A AND IT'S ASSOCIATED CONTROL AIR IS DISCONNECTED.
4. REFER TO CMS2 FOR DRAWING NUMBERS RELATING TO VALVE IDENTIFICATIONS SHOWN ON THIS DIAGRAM. 52

BUILDING LOCATION MATRIX

BUILDING	BR-2013 SH. 1	2	3	4	5	6	7	8
REACTOR BLDG.	X	X	X		X		X	X
TURBINE BLDG.	X		X	X	X		X	
OLD RADWSTE.BLDG.		X						X
NEW RADWSTE.BLDG.		X						X
AUG.OFFGAS BLDG.		X						X
CHLORIN.BLDG.				X				
BOILER HOUSE		X			X		X	X
PRETREATMENT BLDG.	X							
MACHINE SHOP	X							
CCW HT.EX.BLDG.	X							
NEW PUMP HOUSE	X							X
INTAKE STRUCTURE				X				
COND.TRANSF.PMP.RM.				X				
RADWS BLDG.					X			
STACK	X							

SHEETS 9 & 10 ARE NOT APPLICABLE

CAD FILE: V3E.857.21.0100.010-.5201
THIS IS A COMPUTER GENERATED DWG. DO NOT REVISE IT MANUALLY

REVISION 41 OF THIS DRAWING WAS REDRAWN FROM GU 3E-857-21-1000 SH2 REV2 AND GU 3E-857-21-1000 SH3 REV 1

REVISION 47 OF THIS DRAWING WAS REDRAWN FROM BR 2013 SH.13 REV.42.

NO.	DWG. NO.	TITLE
3	BR-2001 SH3	MECHANICAL DRAWING INDEX
2	BR-2001 SH2	ABBREVIATIONS
1	BR-2001 SH1	MECHANICAL SYMBOLS

REFERENCES

MARK EVERLT 02-07-96 DRAWN DATE
SUPERVISOR 2-16-96 DATE
CHECKER 2-16-96 DATE
DESIGN LEADER DATE
ENGINEER DATE
MANAGER APPROVAL 2-16-96 DATE

GPU Nuclear/BR

INSTRUMENT (CONTROL) AIR SYSTEM (FLUID DETAILS NEW RADWASTE)

FLOW DIAGRAM

OYSTER CREEK | DWG. NO. BR 2013 | SH. 10 OF 10 | REV. 52

SCALE: NONE

ENG. MECH. | BA | BASIC

BR 2013 SH. 10 OF 10

REVISIONS		
REV	ZONE	DESCRIPTION
28	F-3	ECO C307414

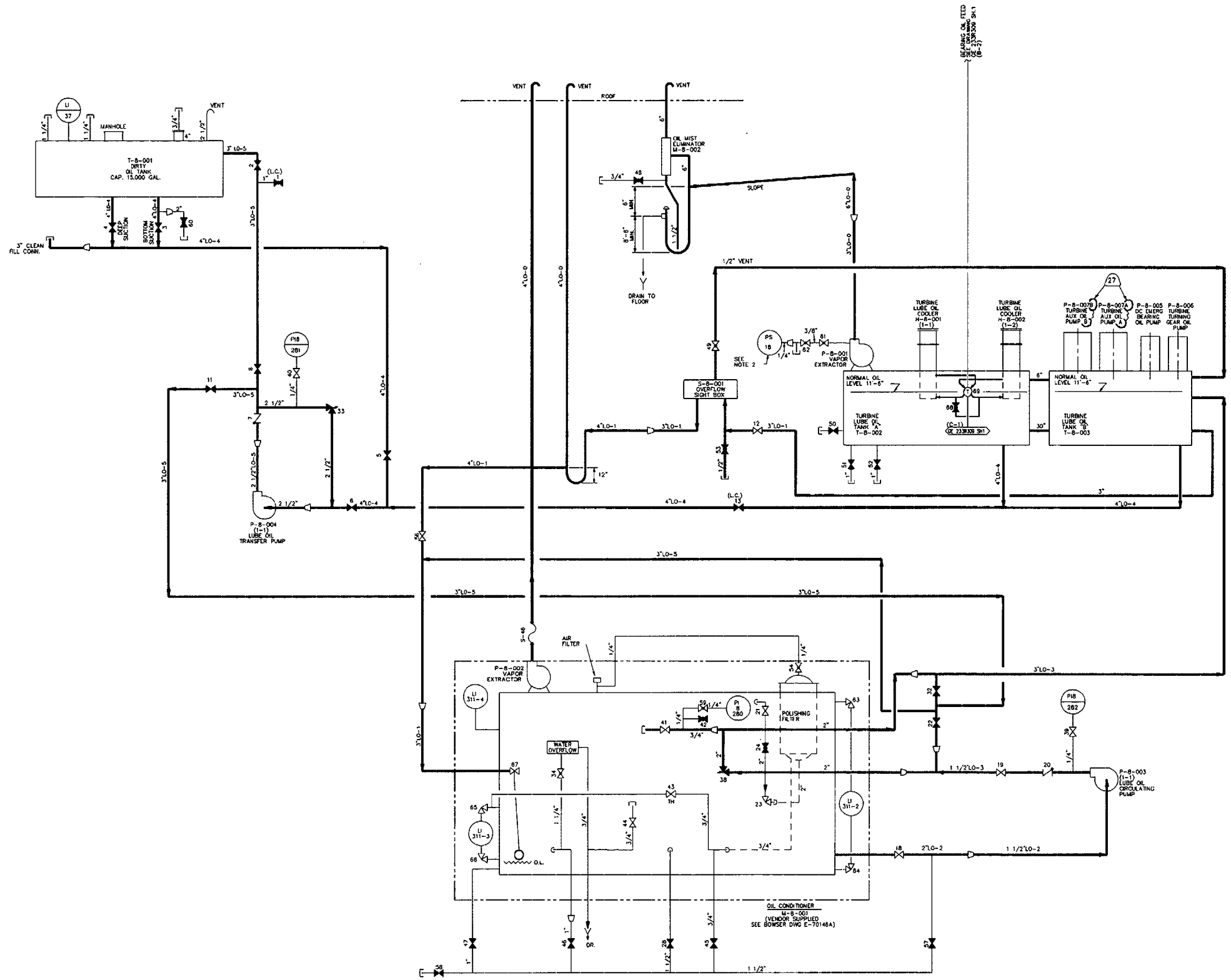

NOTES:

1. SEE VALVE LABELING NOTE.
2. PS-18 AND VALVE V-8-62 ARE LOCATED INSIDE CABINET ON TOP OF LUBE OIL TANK "B"

LABELING NOTE

ALL VALVES ON THIS SHEET ARE PREFIXED V-8 UNLESS OTHERWISE NOTED.

NO.	DWG. NO.	TITLE
		REFERENCES
5	BR-2006 SH3	TURBINE BLDG. CLOSED COOLING WATER FLOW DIAG.
4	E-70146A	BOWSER DWG. OIL CONDITIONER
3	BR-2001 SH3	MECHANICAL DRAWING INDEX
2	BR-2001 SH2	ABBREVIATIONS
1	BR-2001 SH1	MECHANICAL SYMBOLS

CAD FILE NAME: BR 2014 S1 R28

REVISION 27 OF THIS DRAWING WAS TRANSLATED TO AUTOCAD FROM CADAM FILE: V3E_311.21.0100.001-.2701

THIS IS A COMPUTER GENERATED DRAWING. DO NOT REVISE IT MANUALLY.

DRAWN	NAME	DATE
NANCY A. CARLSON		5-16-98
CHECKED	NAME	DATE
NICK TRIOLO		5-19-98
DESIGN REVIEWER	NAME	DATE
		5/19/98
ENGINEER	NAME	DATE
N/A		
ENGINEERING MANAGER	NAME	DATE
N/A		
PROGRAMME ENGINEERING		

GPU NUCLEAR

TURBINE LUBE OIL SYSTEM
FLOW DIAGRAM

OYSTER CREEK

DWG. NO. BR 2014 | SH. 1 | REV 28

SCALE : NONE

PIMS # N/A

DRAWING BR 2014 SH. 1 OF 1

SIZE	DRAWING NO.	SHEET	REV.
E	BR 2192	1 OF 2	11

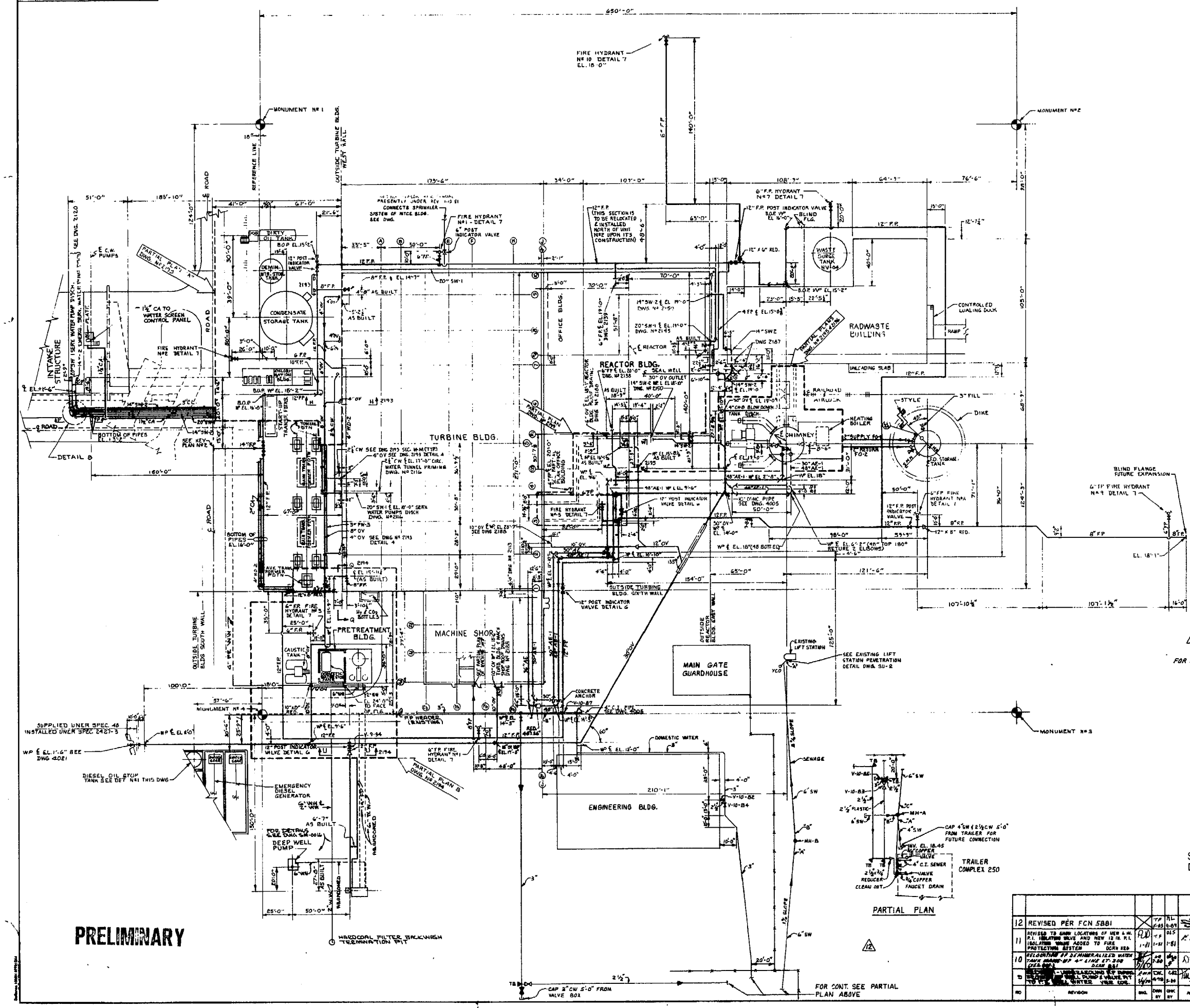
650'-0"
FIRE HYDRANT Nº 10 DETAIL 7 EL. 18'-0"
MONUMENT Nº 1
MONUMENT Nº 2
MONUMENT Nº 3
MONUMENT Nº 4
REFERENCE LINE
OUTSIDE TURBINE BLDG. WEST WALL
CONDENSATE STORAGE TANK
DIRTY OIL TANKS
INTAKE STRUCTURE
TURBINE BLDG.
REACTOR BLDG.
OFFICE BLDG.
RADWASTE BUILDING
WASTE SURGE TANK
CONTROLLED LOADING DOCK
UNLOADING SLAB
RAILROAD
HEATING BOILER
CHIMNEY
FO STORAGE TANK
DIKE
PRETREATMENT BLDG.
MACHINE SHOP
MAIN GATE GUARDHOUSE
ENGINEERING BLDG.
OUTSIDE TURBINE BLDG. SOUTH WALL
OUTSIDE TURBINE BLDG. NORTH WALL
OUTSIDE TURBINE BLDG. EAST WALL
DEEP WELL PUMP
EMERGENCY DIESEL GENERATOR
DIESEL OIL STOR TANK SEE DET Nº1 THIS DWG
HARDCOAL FILTER BACKWASH TEERMINATION PIT
EXISTING LIFT STATION
SEE EXISTING LIFT STATION PENETRATION DETAIL DWG. SU-2
TRAILER COMPLEX 250
PARTIAL PLAN
FOR CONT. SEE PARTIAL PLAN ABOVE
DETAIL 8
BOTTOM OF PIPES EL. 15'-6"
SUPPLIED UNDER SPEC. 48 INSTALLED UNDER SPEC. 2427-3
WP ℄ EL. 1'-6" SEE DWG 4021
WP ℄ EL. 6'-0"
DOMESTIC WATER
SEWAGE
CAP 3" CW 5'-0" FROM VALVE BOX
CAP 4" SW & 2½" CW 5'-0" FROM TRAILER FOR FUTURE CONNECTION
BLIND FLANGE FUTURE EXPANSION
6" FP FIRE HYDRANT Nº 9 DETAIL 7
FIRE HYDRANT Nº 1 - DETAIL 7
6" POST INDICATOR VALVE
12" POST INDICATOR VALVE DETAIL G
12" POST INDICATOR VALVE DETAIL 4
12" POST INDICATOR VALVE DETAIL 6
12" POST INDICATOR VALVE DETAIL 1
12" POST INDICATOR VALVE DETAIL 4
6" FP FIRE HYDRANT Nº 3 DETAIL 7
6" FP FIRE HYDRANT Nº 5 DETAIL 7
6" FP FIRE HYDRANT Nº 7 DETAIL 7
6" FP FIRE HYDRANT Nº 9 DETAIL 7
PRESENTLY UNDER REV 11-13-81
CONNECTS SPRINKLER SYSTEM OF NTCE BLDG. SEE DWG.
PARTIAL PLAN B DWG. NO 2195
PARTIAL PLAN DWG. NO 2195
PARTIAL PLAN DWG. NO 2195
SEE DWG. 2120
SEE DWG. 2193 SEC. M-M (TYP)
SEE DWG. 2195 DETAIL A
SEE DWG. 2196
SEE DWG. 2193 DETAIL 4
SEE DWG. 2195
SEE DWG. 4005
SEE DWG. 4006
SEE DWG. 4006
SEE DWG. 2195
SEE DWG. 2195
SEE DWG. 2195

SIZE	DRAWING NO.	SHEET	REV.
E	BR 2192	2 OF 2	0

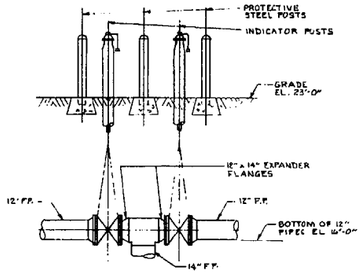

DETAIL 5
SCALE 3/8" = 1'-0"

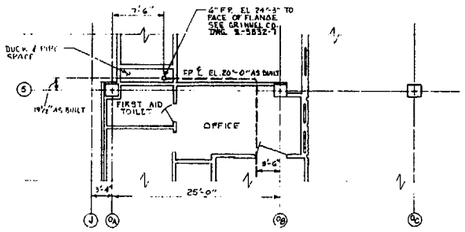

PARTIAL PLAN OF OFFICE BUILDING FIRST FLOOR EL. 23'-6"
SCALE: 1/8" = 1'-0"

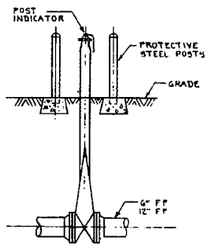

DETAIL 6
SCALE 3/8" = 1'-0"

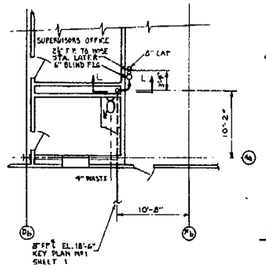

PARTIAL PLAN OF MACHINE SHOP
SCALE 1/8" = 1'-0"

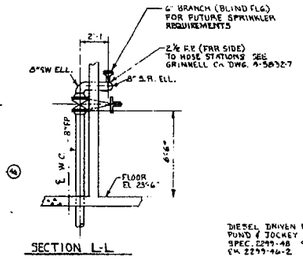

SECTION L-L

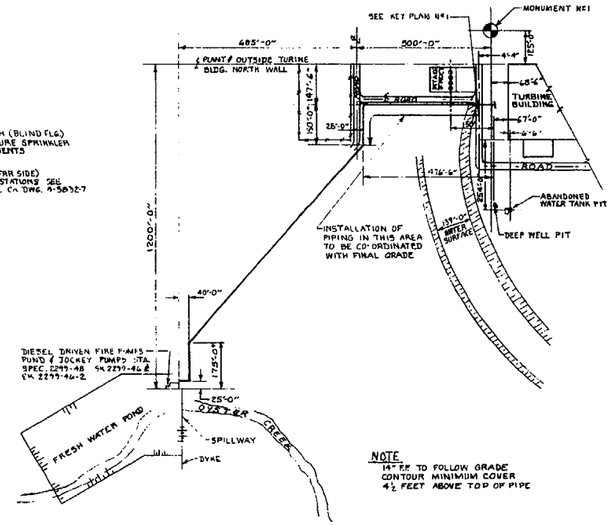

NOTE:
14" F.P. TO FOLLOW GRADE CONTOUR MINIMUM COVER 4½ FEET ABOVE TOP OF PIPE

KEY PLAN No 2
SCALE 1" = 200'-0"

NOTE:
FOR LOCATION OF FIRE HYDRANTS SEE KEY PLAN No 1 SHEET 1

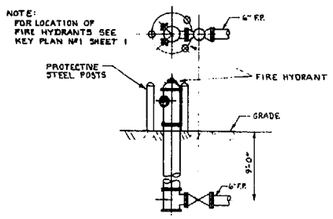

DETAIL 7
SCALE NONE

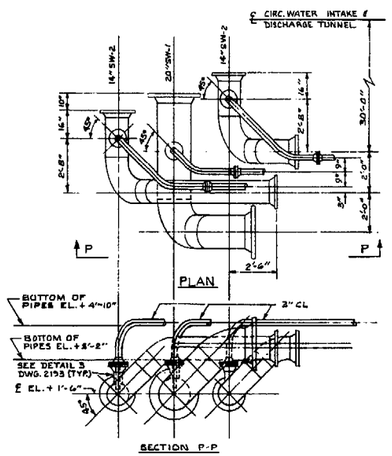

DETAIL 8
SCALE 3/8" = 1'-0"

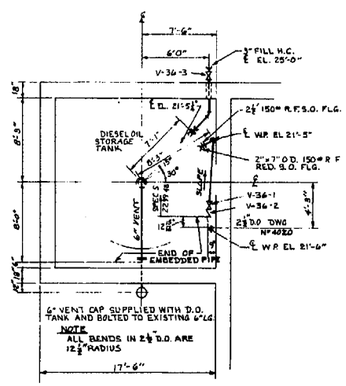

DETAIL 11
SCALE 3/8" = 1'-0"

SUPERSEDES BURNS & ROE DWG. 2192-8

W.O. 2299

NO	REVISION	ENG.	DWN BY	CHK BY	APPROVED BY & DATE
0	REDRAWN / BROUGHT UP TO DATE ADDED HYDRANT #9 & #10, ADD SH. 2.		DRC 4-29-69	GAE 2-2-69	

JERSEY CENTRAL POWER & LIGHT CO.
GENERATION DEPARTMENT

COMPOSITE YARD PIPING KEY PLAN

SIZE	TOLERANCES:	SCALE: AS NOTED
E	DRAWING NO. BR 2192	SHEET 2 OF 2 REV 0

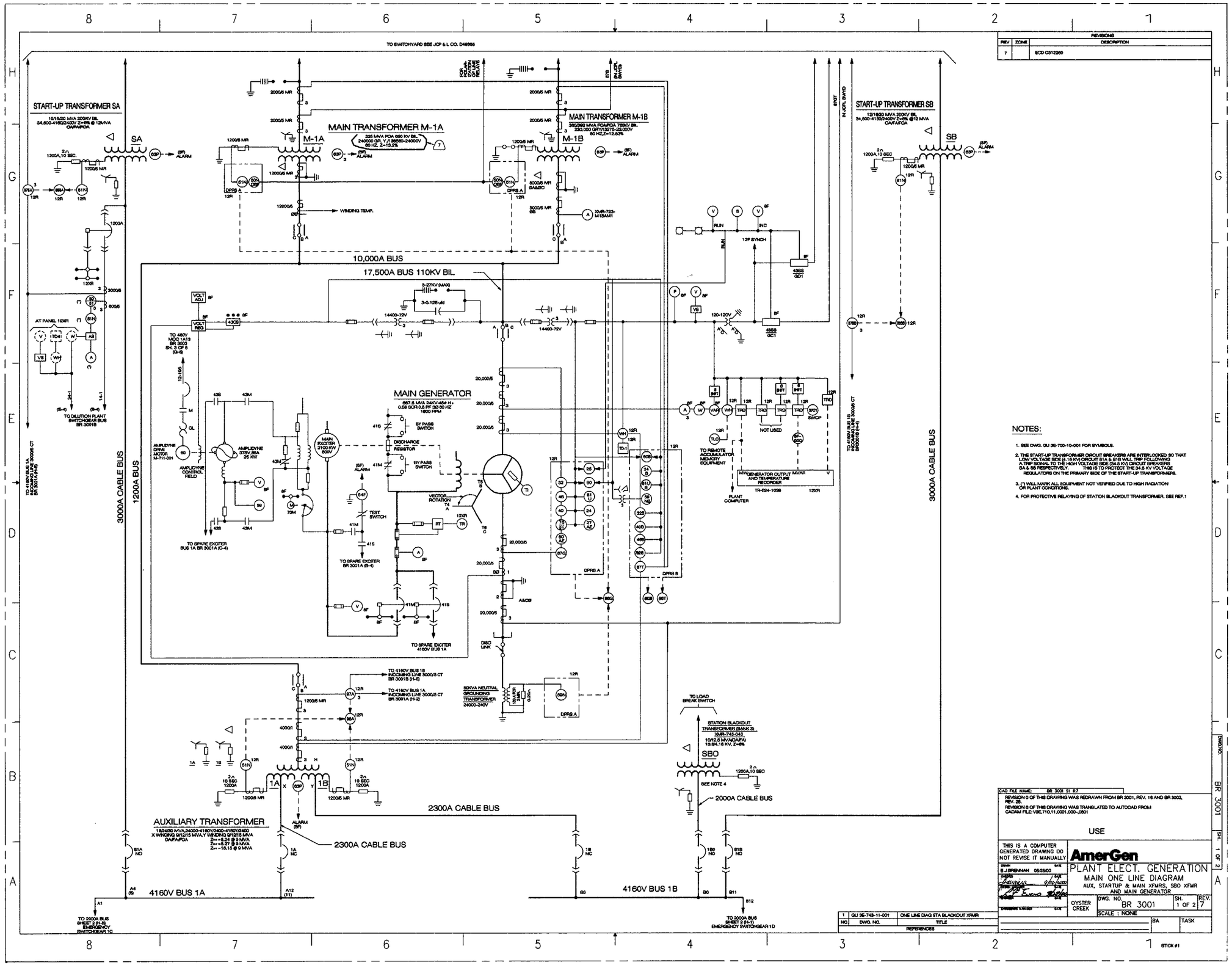

REVISIONS		
REV	ZONE	DESCRIPTION
7		ECD C312260

NOTES:

1. SEE DWG. GU 3E-700-10-001 FOR SYMBOLS.
2. THE START-UP TRANSFORMER CIRCUIT BREAKERS ARE INTERLOCKED SO THAT LOW VOLTAGE SIDE (4.16 KV) CIRCUIT 51A & 51B WILL TRIP FOLLOWING A TRIP SIGNAL TO THE HIGH VOLTAGE SIDE (34.5 KV) CIRCUIT BREAKERS 5A & 5B RESPECTIVELY. THIS IS TO PROTECT THE 34.5 KV VOLTAGE REGULATORS ON THE PRIMARY SIDE OF THE START-UP TRANSFORMERS.
3. (?) WILL MARK ALL EQUIPMENT NOT VERIFIED DUE TO HIGH RADIATION OR PLANT CONDITIONS.
4. FOR PROTECTIVE RELAYING OF STATION BLACKOUT TRANSFORMER, SEE REF.1

NO	DWG. NO.	TITLE
1	GU 3E-743-11-001	ONE LINE DIAG STA BLACKOUT XFMR

REFERENCES

CAD FILE NAME: BR 3001 S1 R7

REVISION 0 OF THIS DRAWING WAS REDRAWN FROM BR 3001, REV. 16 AND BR 3002, REV. 26.
REVISION 6 OF THIS DRAWING WAS TRANSLATED TO AUTOCAD FROM CADAM FILE V3E.710.11.0001.000-.0001

USE

THIS IS A COMPUTER GENERATED DRAWING DO NOT REVISE IT MANUALLY

DRAWN: E.J.BRENNAN 06/05/00

AmerGen

PLANT ELECT. GENERATION
MAIN ONE LINE DIAGRAM
AUX, STARTUP & MAIN XFMRS, SBO XFMR AND MAIN GENERATOR

OYSTER CREEK | DWG. NO. BR 3001 | SH. 1 OF 2 | REV. 7
SCALE : NONE
BA | TASK

DRAWING BR 3001 SH. 1 OF 2

STICK #1

GROUP=OC SUBGRP=G1DZIN SCALE= 0.6500 DRAWID=V3E741110001002-0401
DATE=11/06/96 TIME=14.30 ACCESS=NONE
LOGON ID=N3364
PLOT= 1

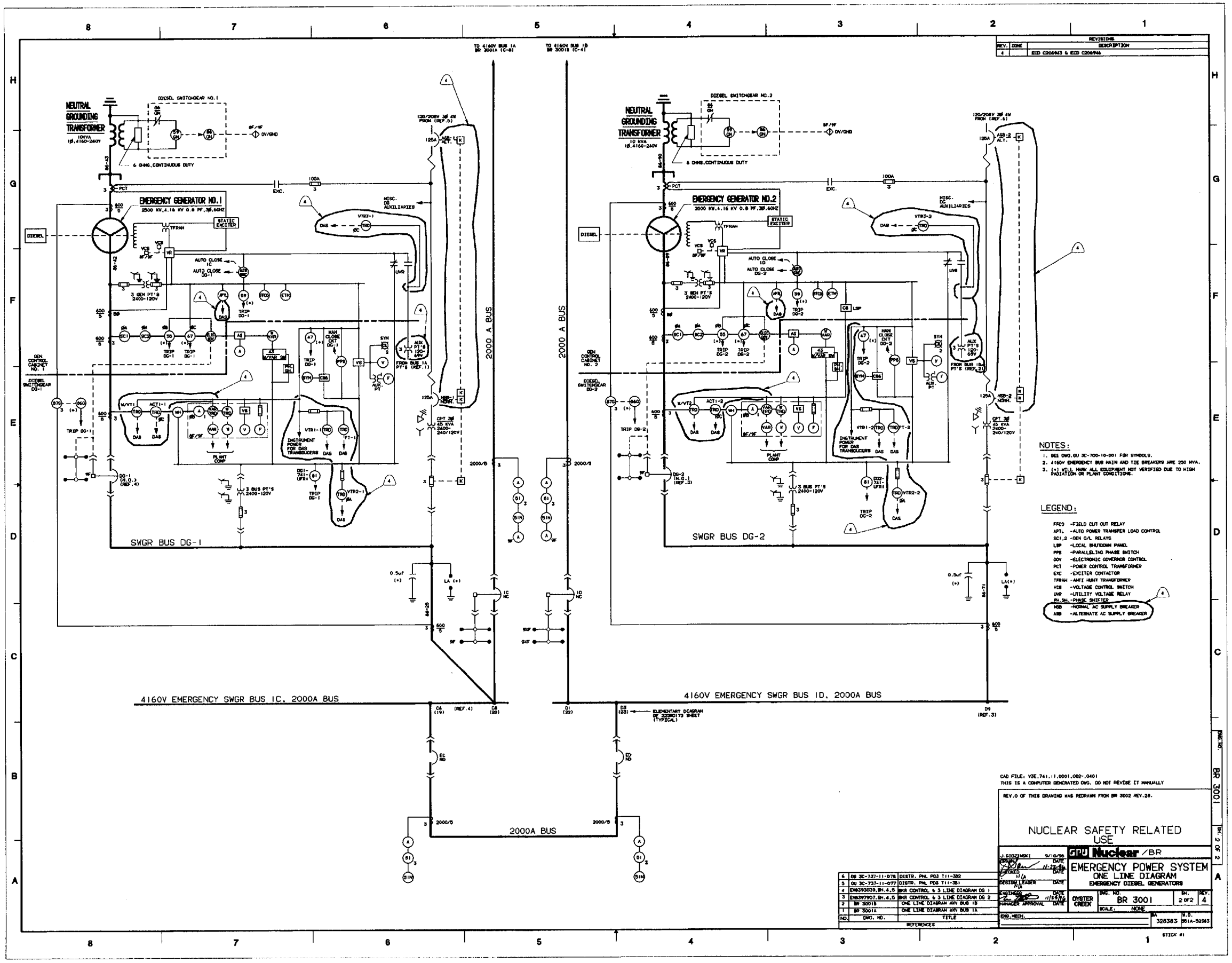

REVISIONS		
REV.	ZONE	DESCRIPTION
4		ECO C206943 & ECO C206946

NO.	DWG. NO.	TITLE
6	OU 3C-737-11-078	DISTR. PNL PD3 T11-382
5	OU 3C-737-11-077	DISTR. PNL PD3 T11-381
4	DN393039.SH.4,5	BKR CONTROL & 3 LINE DIAGRAM DG 1
3	DN397907.SH.4,5	BKR CONTROL & 3 LINE DIAGRAM DG 2
2	BR 3001B	ONE LINE DIAGRAM ANV BUS 1B
1	BR 3001A	ONE LINE DIAGRAM ANV BUS 1A

REFERENCES

STICK #1

REVISIONS		
REV.	ZONE	DESCRIPTION
8		FCN C09824 I

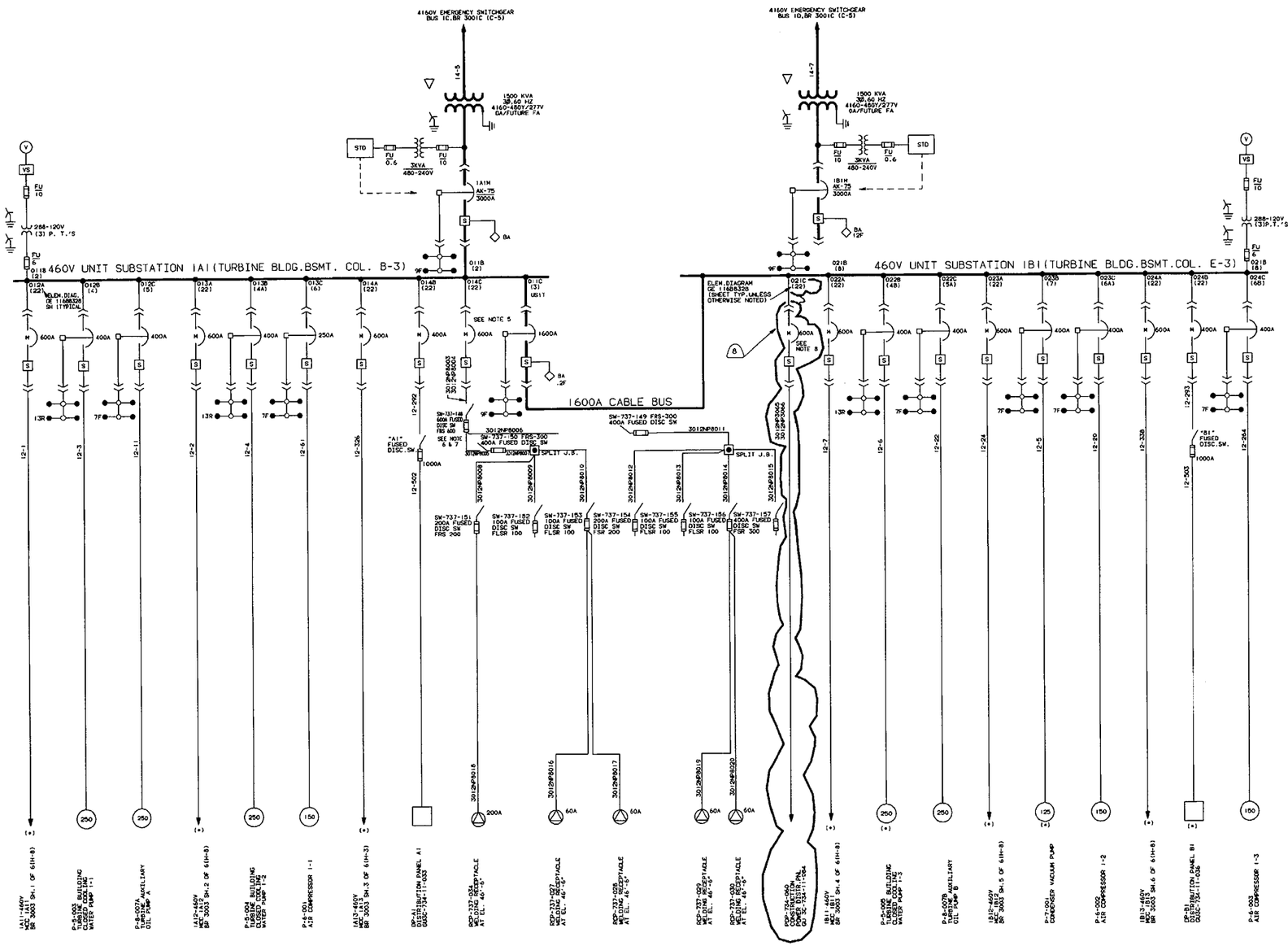

NOTES:

1. SEE DWG.GU3E-700-10-001 FOR SYMBOLS.
2. ALL MANUAL OPERATED BREAKERS ARE AK-50. ALL ELECTRICALLY OPERATED FEEDER BREAKERS(MOTOR FEEDER & TIE BKR) ARE AK-50 & ARE INTER-CHANGEABLE WITH AKS-50 STYLE BREAKERS(EXCEPT AS NOTED). ALL AK-75 BREAKERS(MAIN BKRS) ARE INTERCHANGEABLE WITH AKR-75 STYLE BREAKERS.
3. 460V BUS TIE BREAKER MUST BE INTERLOCKED WITH INCOMING BREAKERS TO AVOID EXCEEDING INTERRUPTING CAPACITY.
4. (*) WILL MARK ALL EQUIPMENT NOT VERIFIED DUE TO HIGH RADIATION OR PLANT CONDITIONS.
5. BREAKER 014C TO BE RACKED IN AND ENERGIZED DURING THE OUTAGE
6. FUSES ARE TO BE INSTALLED IN DISCONNECT SWITCH SW-737-148 DURING THE OUTAGE. OTHERWISE, REMOVED AND STORED IN BLDG.#6 FOR RE-USE.
7. DISCONNECT SWITCH SW-737-148 TO BE ENERGIZED DURING OUTAGE
8. CIRCUIT BREAKER 021C TP BE RACKED-IN AND ENERGIZED DURING THE OUTAGE ONLY. (8)

CAD FILE: V3E,732,11,0006,001-,0801
THIS IS A COMPUTER GENERATED DWG. DO NOT REVISE IT MANUALLY

REVISION 0 OF THIS DRAWING WAS REDRAWN FROM BR 3002, REV. 28.

DRAWN: M. ROSS 10/03/94	GPU Nuclear/BR	
CHECKED: C. McLAUCHLIFFE 1/31/95	480V SYSTEM ONE LINE DIAGRAM 460V UNIT SUBSTATION 1A1 & 1B1	
DESIGN LEADER: 2/3/95		
ENGINEER: L-1-95	OYSTER CREEK	DWG. NO. BR 3002 — SH. 1 OF 4 — REV. 8
MANAGER APPROVAL		SCALE: NONE
ENG.MECH.	BA 328259	TASK

STICK #1

ND.	DWG. NO.	TITLE
		REFERENCES

BR 3002 SH. 1 OF 4

GROUP=DC SUBGRP=GIDZIN SCALE= 0.0000 DRAWID=V3E732I100060002-0401
DATE= 6/19/92 TIME=13.57 ACCESS=NONE
LOGON ID=ND386
PLOT= 1

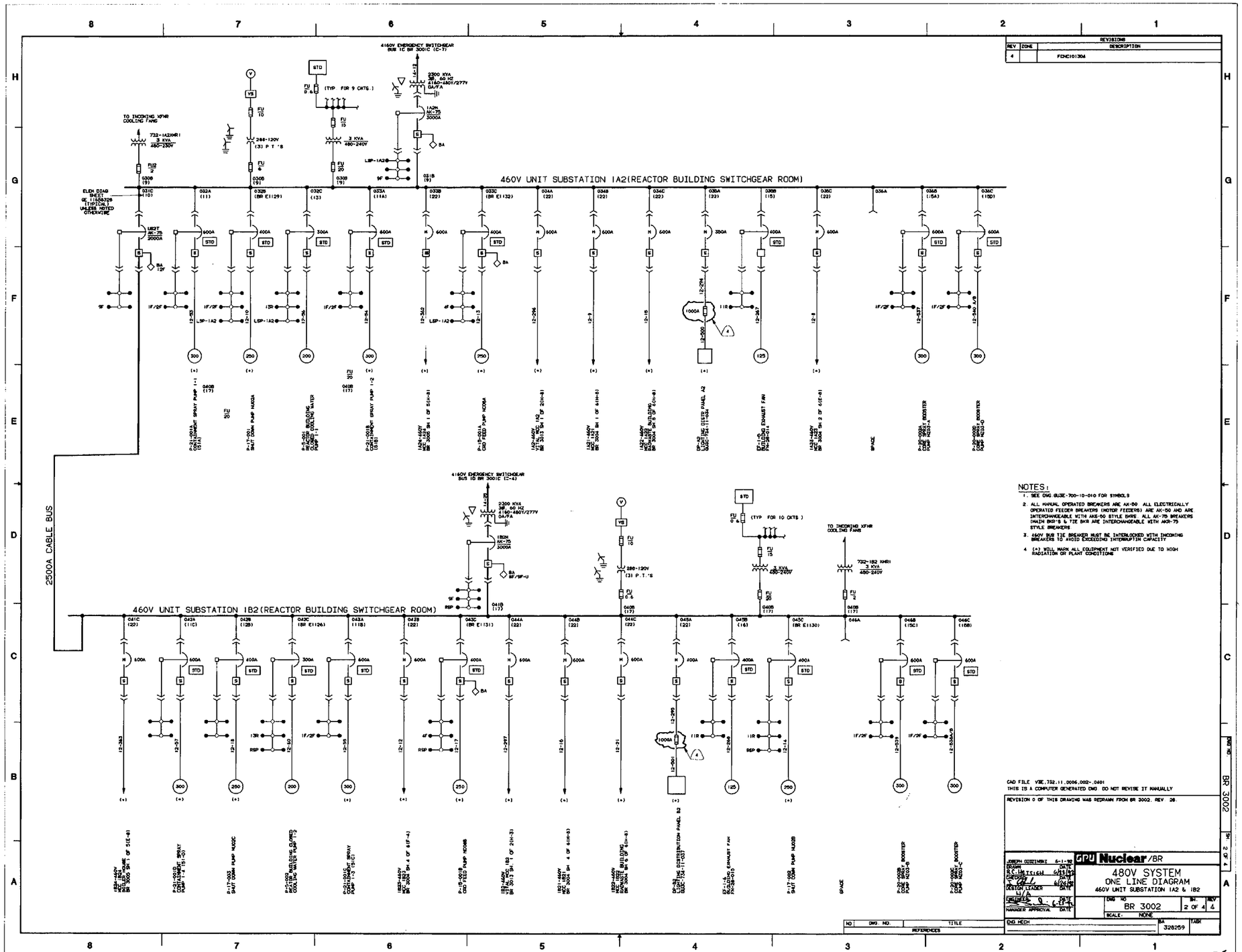

STICK 1

REVISIONS			
REV	ZONE	DESCRIPTION	
4		FDNC077954	

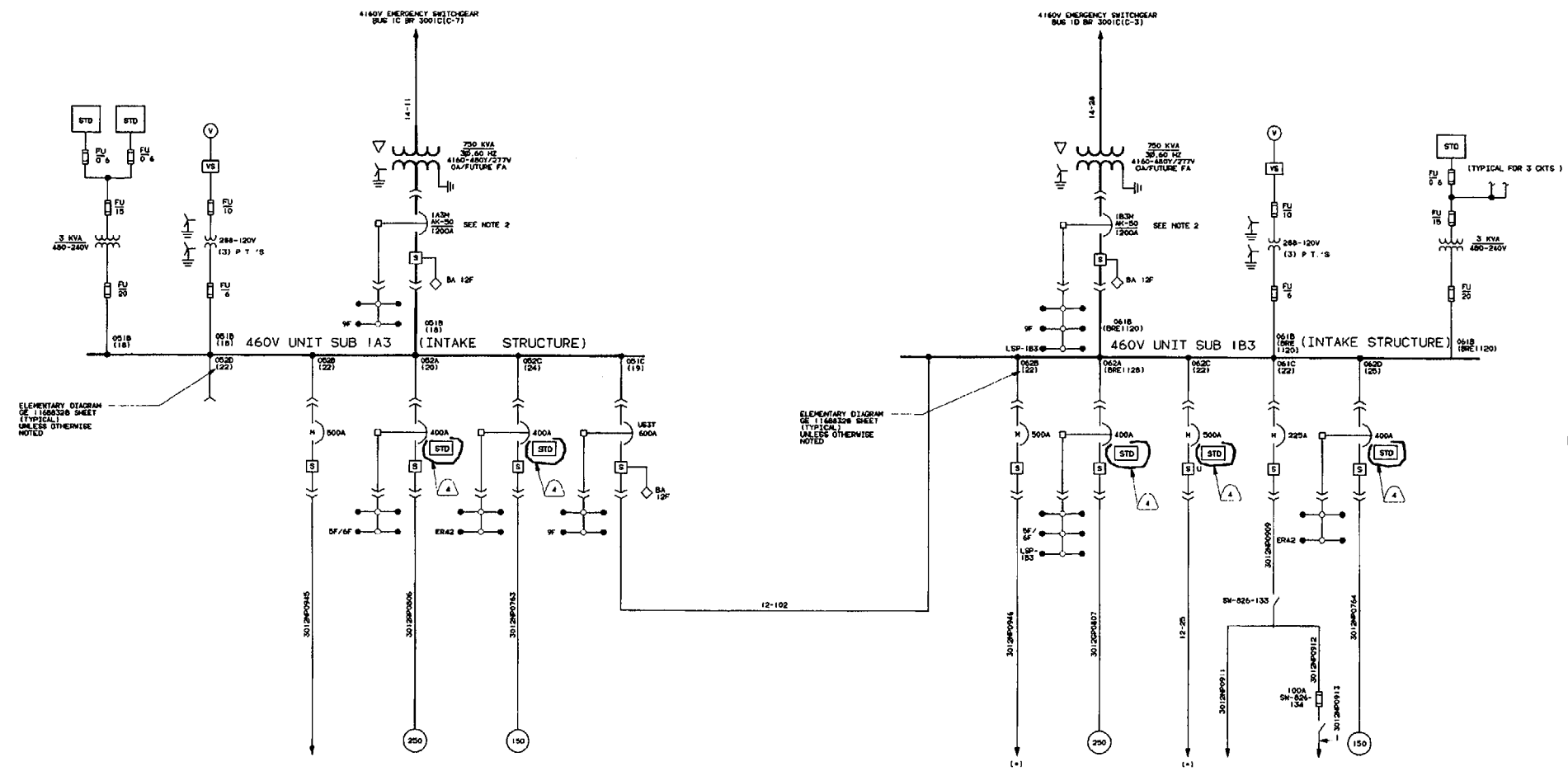

CAD F .E V3E.732.11.0006.002-.0401
THIS IS A COMPUTER GENERATED DWG DO NOT REVISE IT MANUALLY

REVISION 0 OF THIS DRAWING WAS REDRAWN FROM BR 3002. REV. 7.

NANCY A. CARLSON 1-8-92 DRAWN DATE	GPU Nuclear/BR	
C. HINCHLIFFE 1-13-92 CHECKED DATE	480V SYSTEM ONE LINE DIAGRAM 460V UNIT SUBSTATION 1A3 & 1B3	
DESIGN LEADER DATE		
N.A. ENGINEER DATE	OYSTER CREEK	DWG NO BR 3002 SH 3 OF 4 REV 4
MANAGER APPROVAL DATE		SCALE NONE
ENG MECH	BA 328259	TASK

NO	DWG NO	TITLE
REFERENCES		

DWG NO BR 3002 SH 3 OF 4

26