3.6 METHODOLOGY FOR R-11 SETPOINT (Air Particulates)

Determine the Monitor Alarm Setpoint based on the inhalation pathway to the child. The most restrictive organ "j" will be determined from the following methodology.

3.6.1 Determine dose rate for organ "j" (mrem/yr).

$$DR_j = \overline{X/Q}\ \Sigma_i\ R_{ij}\ Q_i \qquad (3.6\text{-}1)$$

where:

$\overline{X/Q}$ = the highest calculated annual average relative dispersion factor for any area at or beyond the unrestricted area boundary for all sectors (sec/m^3) from Appendix A.

= 8.1E-5 sec/m^3 (continuous ground release) from Table A-1, Appendix A.

R_{ij} = the organ "j" dose factor due to gamma emissions from particulates greater than or equal to 8 day half-life, I-133, I-131, and H-3.

Q_i = the particulate release rate (μCi/sec) for radionuclide "i".

= 472 $(C_i)(F)$

where:

472 = conversion factor to convert CFM to cc/sec.

C_i = ($\mu Ci/cc_i$ from analysis of containment vessel) (0.366) ÷ (DF) + (μCi/cc, from analysis of Plant Vent) (0.634) when R-11 is sampling the Plant Vent for CV purges.

= ($\mu Ci/cc_i$ from analysis of CV) (0.04) ÷ (DF) + (μCi/cc; from analysis of Plant Vent) (0.960) when R-11 sampling from Plant Vent for CV pressure relief.

= ($\mu Ci/cc_i$ from analysis of CV) ÷ (DF) when R-11 is sampling CV.

F = 95,600 cfm for CV purge when R-11 is sampling from Plant Vent.

= 35,000 cfm for CV purge when R-11 is sampling from CV.

= 2,500 cfm for CV pressure relief when R-11 is sampling from CV.

= 63,100 cfm for CV pressure relief when R-11 is sampling Plant Vent.

DF = 1.0 for Tritium

= 10 for Iodines when using charcoal filters

= 100 for Particulates ≥ 8 day half-lives when using HEPA Filters.

3.6.2 Determine the particulate emission Projected Dose Rate Ratio (PDRR) for the most critical organ "j".

$$PDRR_j = DR_j / 1500 \qquad (3.6-2)$$

1500 = the allowable organ dose rate due to particulates with ≥ 8 day half-life, I-131, I-133, H-3 (mrem/year).

3.6.3 Determine the maximum monitor setpoint concentration (μCi/cc) for most critical organ "j".

Maximum Monitor Setpoint for Organ "j" =

$$[(\Sigma_i\ C_i)\ /\ (PDRR_j)]\ (SF)\ (T_m)\ (TL) \qquad (3.6\text{-}3)$$

SF = an engineering factor used to provide a margin of safety for cumulative measurement uncertainties = 0.50.

T_m = fraction of the radioactivity from the site that may be released via the monitored pathway to ensure that the site boundary limit is not exceeded due to simultaneous releases from several pathways.

= 0.81 for R-11 particulate monitor.

TL = total activity / $\sum_i C_i$ where the total activity is the sum of all detectable particulates from analysis of particulate filter divided by the detectable particulates of ≥ 8 day half-lives. If this ratio is not known, use 1.0.

= 1.0 when R-11 sampling from Plant Vent.

3.6.4 Determine the maximum monitor setpoint (cpm) for the most critical organ "j".

$$\text{Setpoint} = (\text{Maximum organ setpoint in } \mu\text{Ci/cc})\ (\text{Eff}) + \text{Bkg} \qquad 3.6-4$$

Monitor Eff = monitor efficiency obtained from the applicable effluent monitor curve efficiency located in the POM, Volume 15, Curve Book. Use the radioactivity concentration (μCi/cc) to find cpm.

Bkg = the monitor background (cpm)

3.7 Methodology for R-14A Setpoint (Particulate Monitor)

This section describes the methodology in determining high alarm setpoint for the plant vent monitor (R-14A) based on the inhalation pathway to the child. The most restrictive organ "j" will be determined from a conservative mix (GALE Code).

3.7.1 Determine Si, the fraction of the total radioactivity in particulate form in the gaseous effluents comprised by radionuclide "i" for each radionuclide in the gaseous effluent from Table 3.3-1.

$$Si = \frac{Ai}{\Sigma i\, Ai} \qquad (3.7\text{-}1)$$

where:

Ai = The radioactivity of particulate radionuclide "i" in the gaseous effluent from Table 3.3-1.

3.7.2 Determine Qm, the maximum acceptable total release rate [µCi/sec] of all the particulate radionuclides in the gaseous effluent based upon the most restrictive organ "j" exposure limit of 1500 mrem/year by:

$$Qm_I = \frac{1500}{(\overline{X/Q})\, \Sigma i\, Si\, P_{iI}} \qquad (3.7\text{-}2)$$

where:

1500 = the maximum allowable dose rate in an unrestricted area in gaseous effluents due to radioparticulates with half lives greater than or equal to 8 days, radioiodines and tritium via the inhalation pathway to the child.

$(\overline{X/Q})$ = The highest calculated annual average relative dispersion factor for any area at or beyond the unrestricted area boundary for all sectors (sec/m^3).

= 8.1E-05 Sec/m^3 (continuous ground release) from Table A-1, Appendix A.

Pi_I = The dose parameter for I-131, I-133, H-3, and all particulates in particulate form with half lives greater than or equal to 8 days for the inhalation pathway only in the most restrictive sector in mrem/year per $\mu Ci/m^3$. The dose factor is based on the most restrictive group (child) and most restrictive organ at the SITE BOUNDARY (see Table 3.3-4).

3.7.3 Determine Qiv_I, fraction of plant stack release rate acquired on filter, by:

$$Qiv_I = Qm_I\,[3.33E\text{-}05] \qquad (3.7\text{-}3)$$

where:

3.33E-05 = fraction of monitor sample rate to plant vent flow rate (2.02 CFM/60,600 CFM)

3.7.4 Determine HCI, maximum acceptable concentration [µCi] accumulated on the filter due to all particulate radionuclides in the gaseous effluents based on the most restrictive organ "j", by:

$$HCI = Qiv_I\,(T) \qquad (3.7\text{-}4)$$

where:

T = time in seconds
= 8.64E04 for one day
= 6.05E05 for one week

3.7.5 Determine HAC, high alarm concentration [µCi] from particulate radionuclides in gaseous effluents, by:

$$HAC = (HCI)\,(SF)\,(Tm) \qquad (3.7\text{-}5)$$

where:

SF = An engineering factor used to provide a margin of safety for cumulative uncertainties of measurements
= 0.5

Tm = Fraction of the radioactivity from the site that may be released to ensure the site boundary limit is not exceeded due to simultaneous releases from pathways
= 0.92 for the Plant Vent Monitor (R-14A).

3.7.6 Determine the HSP, High Alarm Setpoint including background [cpm], by:

$$HSP = (HAC / Eff) + BKG \qquad (3.7\text{-}6)$$

where:

Eff = from monitor efficiency curve located in the Plant Operating Manual Curve Book.

3.8 Methodology for R-14B Setpoint (Iodine Monitor)

This section describes the methodology in determining high alarm setpoint for the plant vent monitor (R-14B) based on the inhalation pathway to the child. The most restrictive organ "j" will be determined from a conservative mix (GALE Code).

3.8.1 Determine Qm_I, the maximum acceptable release rate [µCi/sec] of I-131 in gaseous effluents based upon the most restrictive organ "j" exposure limit of 1500 mrem/year, by:

$$Qm_I = \frac{1500}{(X/Q)\,P_{iI}} \qquad (3.8\text{-}1)$$

where:

Pi_I = The dose parameter for I-131 for the inhalation pathway only in the most restrictive sector in mrem/year per µCi/m^3. The dose factor is based on the most restrictive group (child) and most restrictive organ at the Site Boundary (see Table 3.3-4).

3.8.2 Determine Qiv_I, fraction of plant stack release rate acquired on the cartridge, by:

$$Qiv_I = Qm_I\,(3.33E\text{-}05) \qquad (3.8\text{-}2)$$

3.8.3 Determine HCI, maximum acceptable concentration [µCi] accumulated on the cartridge due to I-131 in gaseous effluents based on the most restrictive organ "j".

$$HCI = (Qiv_I)(T) \qquad (3.8\text{-}3)$$

where:

T = time is seconds
= 8.64E04 for one day
= 6.05E05 for one week

3.8.4 Determine HAC, high alarm concentration [µCi] from I-131 in gaseous effluents, by:

$$HAC = (HCI)(SF)(Tm) \qquad (3.8\text{-}4)$$

3.8.5 Determine HSP, High Alarm Setpoint including background [cpm], by:

$$HSP = (HAC/Em) + BKG \qquad (3.8\text{-}5)$$

3.9 <u>Methodology for R-22 and R-23 Setpoint Determination for the Iodine and Particulate Monitors</u>

This section describes the methodology in determining high alarm setpoint for the particulate and iodine channels for the Environmental and Radiation Control Building and Radwaste Building exhaust vent (R-22 and R-23, respectively) based on the inhalation pathway to the most restrictive organ and age group (child).

3.9.1 The dose rate in an unrestricted area resulting from the release of radioiodines, tritium, and particulates with half-lives ≥ 8 days is limited to 1500 mrem/yr to any organ via inhalation (10 CFR 20). The iodine and particulate monitor setpoints for R-22 and R-23 are limited to 1.0% of 10 CFR 20 over one hour period. Therefore, the iodine and particulate channels high alarms shall be set to 1.0% of 10 CFR 20 for any given hour.

3.9.2 Determine Q_i, the maximum release rate (µCi/sec) for Iodine-131 and Cobalt-60 (the most restrictive particulate ≥ 8 day half-life) based on the most restrictive organ "j" via inhalation to a child.

$$Q_i = \frac{15}{(R_i)(\overline{X/Q})} \qquad (3.9\text{-}1)$$

where:

15 = 1.0% of the maximum allowable dose rate in an unrestricted area in gaseous effluents due to radioparticulates with half-lives greater than or equal to 8 days, radioiodine, and tritium via the inhalation pathway to the child.

R_i = The dose factor based on the most restrictive age group (child) and the most restrictive organ (thyroid) for Iodine-131 (1.62E7 mrem/yr/µCi/m^3) and lung for Co-60 (7.06E6 mrem/yr/µCi/m^3) at the most restrictive location (SITE BOUNDARY).

$\overline{X/Q}$ = Annual average relative dilution for continuous ground level releases for the most restrictive section at the SITE BOUNDARY (8.08E-5 sec/m^3 for the SSE sector from Table A-1).

Therefore:

$Q_{iIodine\text{-}131}$ = 1.15E-2 µCi/sec

$Q_{iCobalt\text{-}60}$ = 2.63E-2 µCi/sec

3.9.3 Determine S_{c_i}, the air particulate filter and charcoal cartridge sample collection rate (µCi/sec) by:

$$S_{c_i} = Q_i \frac{f}{F} \qquad (3.9\text{-}2)$$

where:

f = sampler flow rate (typically 2.5 CFM for R-22 and 2 CFM for R-23)

F = Radwaste Building exhaust vent flow rate (15,000 typically)

= Environmental and Radiation Control Building exhaust vent flow rate (11,500 typically)

Therefore:

The typical Co-60 sample collection rate is 5.72E-6 µCi/sec and 4.39E-6 µCi/sec, for R-22 and R-23, respectively.

The typical I-131 sample collection rate is 2.5E-6 µCi/sec and 1.91E-6 µCi/sec for R-22 and R-23, respectively.

3.9.4 Determine Q_{m_i}, the setpoint activity (µCi) accumulated on the air particulate filter and charcoal filter for any given hour by:

$$Q_{m_i} = (S_{c_i})(T) \qquad (3.9\text{-}3)$$

where:

T = 3600 sec in an hour.

Therefore:

The typical setpoint activity for the air particulate filter and the charcoal cartridge is:

Monitor	Particulate	Iodine
R-22	2.06E-02	9.00E-03
R-23	1.58E-02	6.88E-03

3.9.5 Determine the HSP, High Alarm Setpoint including background (cpm) by:

$$HSP = (Q_{m_i})(Em) + BKG \qquad (3.9\text{-}4)$$

where:

Em	=	efficiency of the detector
BKG	=	the background of the detector

The above methodology shall be used for the iodine cartridge and air particulate filter setpoint determinations for the Environmental and Radiation Control Building and Radwaste Building exhaust vent. The sampling and building vent flow rates used in the above equations are subject to change and shall be controlled by plant procedures. If or when this occurs, the recalculations of setpoints shall be performed by approved procedures using the above methodology.

3.10 Radioactive Gaseous Effluent Monitoring Instrumentation

Applicability

Applies to the radioactive gaseous effluent instrumentation system.

Objective

To define the operating requirements for the radioactive gaseous effluent instrumentation system.

Specification

CONTROLS

3.10.1 The radioactive gaseous effluent monitoring instrumentation channels shown in Table 3.10-1 shall be operable with their alarm/trip setpoints set to ensure that the limits of ODCM Specification 3.2.1 are not exceeded. The alarm/trip setpoints of these channels shall be determined in accordance with the ODCM.

ACTIONS

3.10.2 With a radioactive effluent monitoring instrumentation channel alarm/trip setpoint less conservative than required by the above specification, without delay suspend the release of radioactive gaseous effluents, change the setpoint so it is acceptably conservative, or declare the channel not operable.

3.10.3 With less than the minimum number of radioactive gaseous effluent monitoring instrumentation channels operable take the action shown in Table 3.10-1.

3.10.4 The provisions of ODCM Specification 8.1 are not applicable.

Radioactive Gaseous Effluent Instrumentation

The radioactive gaseous effluent monitoring instrumentation is provided to monitor and control, as applicable, the releases of radioactive materials in gaseous effluents during actual or potential releases of gaseous effluents. The alarm/trip setpoints for these instruments shall be calculated in accordance with the procedures in the ODCM to ensure that the alarm/trip will occur prior to exceeding 10 times the limits of 10 CFR Part 20, Appendix B, Table 2, Column 1. The operability and use of this instrumentation are consistent with the requirements of General Design Criteria 60, 63, and 64 of Appendix A to 10 CFR Part 50.

TABLE 3.10-1

RADIOACTIVE GASEOUS EFFLUENT MONITORING INSTRUMENTATION

Release Pathway/Instrumentation	MCO*	Compensatory Measures
1. Plant Vent (R-14)		
a. Radionoble gas monitor (R14C) provides automatic termination of Waste Gas Decay Tank releases upon exceeding alarm/trip setpoint.	1	With the number of channels operable less than the MCO requirements: a. Exert best efforts to return the instruments to operable status within 30 days and, if unsuccessful, explain in the next Annual Radioactive Effluent Release Report why the inoperability was not corrected in a timely manner in accordance with Technical Specification 5.6.3 and, b. Effluent releases via this pathway may continue provided that prior to initiating a waste gas decay tank release: 1. Two independent samples are analyzed in accordance with the Surveillance Requirements of ODCM Specification 3.2.1 and; 2. Two members of the facility staff independently verify the release rate calculations and the discharge line valving.
b. Radionoble gas monitor (R14C) monitors all effluents from Auxiliary Building Ventilation System without providing automatic termination of release upon exceeding their respective alarm setpoints.	1	With the number of channels operable less than the MCO requirement: a. Exert best efforts to return the instruments to operable status within 30 days and, if unsuccessful, explain in the next Annual Radioactive Effluent Release Report why the inoperability was not corrected in a timely manner in accordance with Technical Specification 5.6.3 and, b. Effluent releases via this pathway may continue provided that grab samples are collected once per 12 hours and are analyzed for radionoble gases within 24 hours.

* MCO - Minimum Channels Operable

TABLE 3.10-1 (Continued)

RADIOACTIVE GASEOUS EFFLUENT MONITORING INSTRUMENTATION

Release Pathway/Instrumentation	MCO*	Compensatory Measures
1. Plant Vent (Continued)		
c. Radioiodine Sampler R14B	1	With the number of channels operable less than the MCO requirements: a. Exert best efforts to return the instruments to operable status within 30 days and, if unsuccessful, explain in the next Annual Radioactive Effluent Release Report why the inoperability was not corrected in a timely manner in accordance with Technical Specification 5.6.3 and, b. Effluent releases via this pathway may continue provided that a continuous sample is collected utilizing auxiliary sampling equipment as required by Table 3.12-1.
d. Particulate Sampler R14A	1	With the number of channels operable less than the MCO requirement: a. Exert best efforts to return the instruments to operable status within 30 days and, if unsuccessful, explain in the next Annual Radioactive Effluent Release Report why the inoperability was not corrected in a timely manner in accordance with Technical Specification 5.6.3 and, b. Effluent releases via this pathway may be continued, provided that a continuous sample is collected utilizing auxiliary sampling equipment as required by Table 3.12-1.
e. Sampler flow rate monitor and flow gauge	1 of the 2 monitors	With the number of channels operable less than the MCO requirement: a. Exert best efforts to return the instruments to operable status within 30 days and, if unsuccessful, explain in the next Annual Radioactive Effluent Release Report why the inoperability was not corrected in a timely manner in accordance with Technical Specification 5.6.3 and, b. Effluent releases via this pathway may continue provided the flow rate is estimated once per 4 hours.

* MCO - Minimum Channels Operable

TABLE 3.10-1 (Continued)

RADIOACTIVE GASEOUS EFFLUENT MONITORING INSTRUMENTATION

Release Pathway/Instrumentation	MCO*	Compensatory Measures
1. Plant Vent (Continued) f. Plant Vent flow rate	1	With the number of channels operable less than the MCO requirement: a. Exert best efforts to return the instruments to operable status within 30 days and, if unsuccessful, explain in the next Annual Radioactive Effluent Release Report why the inoperability was not corrected in a timely manner in accordance with Technical Specification 5.6.3 and, b. Effluent releases via this pathway may continue provided that flow rate is estimated once per 4 hours.
2. Containment Vessel via Plant Vent a. Radionoble gas monitor (R-12) provides automatic termination of Containment Vessel releases upon exceeding alarm/trip Setpoint.	1	With the number of channels operable less than the MCO requirement: a. Exert best efforts to return the instruments to operable status within 30 days and, if unsuccessful, explain in the next Annual Radioactive Effluent Release Report why the inoperability was not corrected in a timely manner in accordance with Technical Specification 5.6.3 and, b. Effluent releases via this pathway may continue provided that the Plant Vent Radionoble Gas Monitor (R14C) is operable; otherwise, suspend all releases via this pathway.

* MCO - Minimum Channels Operable

TABLE 3.10-1 (Continued)

RADIOACTIVE GASEOUS EFFLUENT MONITORING INSTRUMENTATION

Release Pathway/Instrumentation	MCO*	Compensatory Measures
2. Containment Vessel via Plant Vent (Continued)		
b. Radioparticulate Monitor (R-11) provides automatic termination of containment vessel releases exceeding alarm/trip setpoints.	1	With the number of channels operable less than the MCO requirement: a. Exert best efforts to return the instruments to operable status within 30 days and, if unsuccessful, explain in the next Annual Radioactive Effluent Release Report why the inoperability was not corrected in a timely manner in accordance with Technical Specification 5.6.3 and, b. Effluent releases via this pathway may continue provided that the Plant Vent Radionoble Gas Monitor (R14C) is operable; otherwise, suspend all releases via this pathway.
c. Sampler flow rate monitor (R-11)	1	With the number of channels operable less than the MCO requirement: a. Exert best efforts to return the instruments to operable status within 30 days and, if unsuccessful, explain in the next Annual Radioactive Effluent Release Report why the inoperability was not corrected in a timely manner in accordance with Technical Specification 5.6.3 and, b. Effluent releases via this pathway may continue provided that the flow rate is estimated once per 4 hours.

* MCO - Minimum Channels Operable

TABLE 3.10-1 (Continued)

RADIOACTIVE GASEOUS EFFLUENT MONITORING INSTRUMENTATION

Release Pathway/Instrumentation	MCO*	Compensatory Measures
3. Fuel Handling Building Lower Level Exhaust Vent		
a. Radionoble gas monitor (R-20)	1	With the number of channels operable less than the MCO requirement: a. Exert best efforts to return the instruments to operable status within 30 days and, if unsuccessful, explain in the next Annual Radioactive Effluent Release Report why the inoperability was not corrected in a timely manner in accordance with Technical Specification 5.6.3 and, b. Effluent releases via this pathway may continue provided that grab samples are taken once per 12 hours and analyzed for radionoble gases within 24 hours.
b. Sampler flow rate monitor (R-20)	1	With the number of channels operable less than the MCO requirement: a. Exert best efforts to return the instruments to operable status within 30 days and, if unsuccessful, explain in the next Annual Radioactive Effluent Release Report why the inoperability was not corrected in a timely manner in accordance with Technical Specification 5.6.3 and, b. Effluent releases via this pathway may continue provided the flow rate is estimated once per 4 hours.

* MCO - Minimum Channels Operable

TABLE 3.10-1 (Continued)

RADIOACTIVE GASEOUS EFFLUENT MONITORING INSTRUMENTATION

Release Pathway/Instrumentation	MCO*	Compensatory Measures
4. Fuel Handling Building Upper Level Exhaust Vent		
a. Radionoble gas monitor (R-21) trips the exhaust and supply fans for the upper level of the Fuel Handling Building upon exceeding alarm/trip setpoint.	1	With the number of channels operable less than the MCO requirement: a. Exert best efforts to return the instruments to operable status within 30 days and, if unsuccessful, explain in the next Annual Radioactive Effluent Release Report why the inoperability was not corrected in a timely manner in accordance with Technical Specification 5.6.3 and, b. Effluent releases via this pathway may continue provided that: 1. The Plant Vent Radionoble Gas Monitor (R14C) is operable, or; 2. Grab samples are collected once per 12 hours and are analyzed within 24 hours for radionoble gases.
b. Sampler flow rate monitor (R-21)	1	With the number of channels operable less than the MCO requirement: a. Exert best efforts to return the instruments to operable status within 30 days and, if unsuccessful, explain in the next Annual Radioactive Effluent Release Report why the inoperability was not corrected in a timely manner in accordance with Technical Specification 5.6.3 and, b. Effluent releases via this pathway may continue provided the flow rate is estimated once per 4 hours.

* MCO - Minimum Channels Operable

3.11 Radioactive Gaseous Effluent Monitoring Instrumentation Surveillance Requirements

Applicability

Applies to the radioactive gaseous effluent instrumentation system.

Objective

To ascertain that the radioactive gaseous effluent instrumentation system is functioning properly in order to accurately monitor radioactive gaseous effluent releases.

Specification

SURVEILLANCE REQUIREMENTS

3.11.1 Each radioactive gaseous effluent monitoring instrumentation channel shall be demonstrated operable by performance of the channel check, source check, channel calibration, and Channel Operational Test operations at the frequencies shown in Table 3.11-1.

TABLE 3.11-1

RADIOACTIVE GASEOUS EFFLUENT MONITORING INSTRUMENTATION SURVEILLANCE REQUIREMENTS

Pathway/Instruments	Channel Check	Source Check	Channel Calibration	Channel Operational Test
1. Plant Vent (R-14)				
a. Radioparticulate monitor (R14A)	W	M	R (Note 2)	Q
b. Radioiodine monitor (R14B)	W	M	R (Note 2)	Q
c. Radionoble gas (R14C)	P (Note 4)/D	P (Note 4)/M	R (Note 2)	Q (Note 5)
d. Sampler flow rate	D (Note 1)	N.A.	R	Q
e. Plant Vent flow rate monitor (F14)	D (Note 1)	N.A.	R	Q
2. Containment Vessel via Plant Vent				
a. Radioparticulate Monitor (R-11)	D	D	R (Note 2)	Q
b. Radionoble gas monitor (R-12)	D	P (Note 3)	R (Note 2)	Q
c. Sampler flow rate monitor (R-12)	D	N.A.	R	Q
3. Fuel Handling Building Lower Level Exhaust Vent				
a. Radionoble gas monitor (R-20)	D	M	R (Note 2)	Q
b. Sampler flow rate monitor (R-20)	D (Note 1)	N.A.	N.A.	N.A.
4. Fuel Handling Building Upper Level Exhaust Vent				
a. Radionoble gas monitor (R-21)	D	M	R (Note 2)	Q
b. Sampler flow rate monitor (R-21)	D (Note 1)	N.A.	N.A.	N.A.

NOTES TO TABLE 3.11-1

Note 1 - The channel check shall consist of verifying indication of flow whenever plant conditions dictate that flow is supposed to be present.

Note 2 - The channel calibration shall be performed using one or more of the reference standards certified by the National Bureau of Standards (NBS) or using standards that have been obtained from suppliers that participate in measurement assurance activities or otherwise NBS traceable.

Note 3 - Prior to each containment release.

Note 4 - Prior to each Waste Gas Decay Tank release.

Note 5 - The Channel Operational Test shall also demonstrate that automatic isolation of this pathway and control room alarm annunciation occur if any of the following conditions exists:

1. Instrument indicates measured levels above the alarm/trip setpoint.
2. Power failure.
3. Channel Fail Alarm.

Note 6 - The Channel Operational Test shall also demonstrate that Control Room alarm annunciation occurs if any of the following conditions exists:

1. Instrument indicates measured levels above the alarm setpoint.
2. Power failure.
3. Instrument indicates a downscale failure.
4. Instrument controls not set in operate mode.

3.12 Radioactive Gaseous Effluents - Sampling and Analysis Requirements

Applicability

Applies to the monitoring of radioactive gaseous effluents.

Objective

To ascertain that radioactive gaseous effluent releases are being maintained as low as reasonably achievable and within allowable limits.

Specifications

SURVEILLANCE REQUIREMENTS

3.12.1 The dose rate due to radioactive materials in gaseous effluents shall be determined to be within the limits of ODCM Specification 3.2.1 in accordance with the methods and procedures of the ODCM by obtaining representative samples and performing analyses in accordance with the sampling and analysis program specified in Table 3.12-1.

TABLE 3.12-1

RADIOACTIVE GASEOUS WASTE SAMPLING AND ANALYSIS PROGRAM

Type of Release	Sampling Frequency	Minimum Analysis Frequency	Required Activity Analysis	Required LLD[a] µCi/ml
Waste Gas Decay Tanks	P	P	Principal Gamma Emitters[c]	1E-04
Containment Pressure Reliefs and Containment Purges	W[e] Grab Sample[b]	W[e] on Grab Sample	Principal Gamma Emitters[c]	1E-04
			Tritium	1E-06
Continuous Releases 1. Plant Vent	M[e,g,h] Grab Sample for Radionoble Gases and Tritium	M[e] on Grab Sample	Principal Gamma Emitters[c]	1E-04
			Tritium	1E-06
	Continuous[d,i] Radioiodine Sample	W[f]	I-131 I-133 on Sample	1E-12 1E-10
	Continuous[d,i] Particulate Sample	W[f] on Sample	Principal Gamma Emitters[c]	1E-11
	Continuous[d] Particulate Samples to be Composited	Q on Composite	Sr-89, Sr-90	1E-11
		M on Composite	Alpha	1E-11
	Continuous	Noble Gas Monitor	Noble Gases Gross Beta and Gamma	2E-5 µCi/cc

TABLE 3.12-1 (Continued)

TABLE NOTATION

a. Lower Limit of Detection (LLD) is an "a priori" limit representing the capability of a measurement system. LLD is calculated in accordance with methodology established in ODCM Table 2.8-1, Note a.

b. Containment pressure relief and purges can be made during the week without sampling by correcting the weekly sample analysis results with the ratio of the Containment Radionoble Gas Monitor (R-12) and the Containment Particulate Monitor (R-11) readings at the time of sampling to the desired time of the pressure relief.

c. The principal gamma emitters for which the LLD specification applies exclusively are the following radionuclides: Kr-87, Kr-88, Xe-133, Xe-133m, Xe-135, and Xe-138 for gaseous emissions, I-131 for halogen emissions, and Mn-54, Fe-59, Co-58, Co-60, Zn-65, Mo-99, Cs-134, Cs-137, Ce-141, and Ce-144 for particulate emissions. This list does not mean that only these nuclides are to be detected and reported. Other peaks which are measurable and identifiable, together with the above nuclides, shall also be identified and reported.

d. The ratio of the sample flow rate to the sampled stream flow rate shall be known for the time period covered by each dose or dose rate calculation.

e. Sampling and analysis shall also be performed following shutdown, startup, or a power change exceeding 15 percent of rated power within one hour unless (1) analysis shows that the dose equivalent I-131 concentration in the primary coolant has not increased more than a factor of 3; (2) the noble gas activity monitor shows that effluent activity has not increased by more than a factor of 3.

TABLE 3.12-1 (Continued)

TABLE NOTATION

f. Samples shall be changed once per 7 days and analyses shall be completed within 48 hours after changing (or after removal from sampler). Sampling and analyses shall also be performed once per 24 hours for 7 days following shutdown, start-up or thermal power level change exceeding 15% of rated thermal power in one hour and if I-131 Dose Equivalent in the RCS is greater than 0.1 µCi/cc. When samples collected for 24 hours are analyzed, the corresponding LLD's may be increased by a factor of 10. The analyses shall be performed within 48 hours.

g. Tritium grab samples shall be taken at least once per 24 hours when the refueling canal is flooded.

h. Tritium grab samples shall be taken at least once per 7 days from the ventilation exhaust from the spent fuel pool area, whenever spent fuel is in the spent fuel pool.

i. When iodine or particulate radioactivity levels exceed 10% of the limit in ODCM Specification 3.2.1, the sampling frequency shall be increased to a minimum of once each day.

3.13 Radionoble Gases - Cumulative Doses

Applicability

Applies to the determination of cumulative doses from radionoble gases.

Objective

To ascertain that cumulative doses from radionoble gases are being maintained as low as reasonably achievable and within allowable limits.

Specification

SURVEILLANCE REQUIREMENTS

3.13.1 Cumulative dose commitments for the current calendar quarter and current calendar year shall be determined in accordance with the ODCM once per 31 days.

3.14 Radioiodines, Radioactive Materials in Particulate Form, and Radionuclides Other Than Radionoble Gases - Cumulative Doses

Applicability

Applies to the determination of cumulative doses from radioiodines, radioactive materials in particulate form, and radionuclides other than radionoble gases.

Objective

To ascertain that cumulative doses form radioiodines, radioactive materials in particulate form, and radionuclides other than radionoble gases are maintained as low as reasonably achievable and within allowable limits.

Specification

SURVEILLANCE REQUIREMENTS

3.14.1 Cumulative dose contributions for the current calendar quarter and current calendar year for I-131, I-133, tritium, and radionuclides in particulate form with half lives greater than 8 days shall be determined in accordance with the methodology and parameters in the ODCM at least once per 31 days.

3.15 Gaseous Radwaste and Ventilation Exhaust Treatment Systems

Applicability

Applies to the gaseous radwaste and ventilation exhaust treatment systems.

Objective

To define the operating requirements for the gaseous radwaste and ventilation exhaust treatment systems and to ascertain that the concentration of radioactive materials in the gaseous radwaste and ventilation exhaust treatment systems is maintained as low as reasonably achievable and within allowable limits.

Specification

CONTROLS

3.15.1 The appropriate portions of the Gaseous Radwaste Treatment System and the Ventilation Exhaust Treatment System shall be maintained and used to reduce the concentrations of radioactive materials in gaseous wastes prior to their discharge when the projected dose commitments due to the release of gaseous effluents to unrestricted areas (See Figure 7-1) when averaged over a calendar quarter would exceed:

a. 0.6 mrem for gamma radiation and 1.3 mrem for beta radiation due to radionoble gases, or,

b. 1.0 mrem to any organ due to radioiodines, radioactive materials in particulate form, and radionuclides other than radionoble gases.

ACTIONS

3.15.2 With the Gaseous Radwaste Treatment System and/or the Ventilation Exhaust Treatment System not operable and with radioactive gaseous wastes being discharged without treatment while in excess of the limits of ODCM Specification 3.15.1 above, prepare and submit a report to the Commission in accordance with ODCM Specification 9.3.b.

SURVEILLANCE REQUIREMENTS

3.15.3 Dose commitments due to gaseous releases shall be projected at least once per 31 days, in accordance with the ODCM to ensure the provisions of ODCM Specification 3.15.1 are satisfied.

BASES

Gaseous Radwaste and Ventilation Exhaust Treatment Systems

The requirements that the appropriate portions of these systems be maintained and used when specified provides reasonable assurance that the releases of radioactive materials in gaseous effluents will be kept "as low as reasonably achievable". This specification implements the requirements of 10 CFR Part 50.36a, General Design Criterion 60 of Appendix A to 10 CFR Part 50, and the design objectives given in Section II.D of Appendix I to 10 CFR Part 50. The specified limits governing the use of appropriate portions of the systems were specified as the dose design objectives set forth in Section II.B and II.C of Appendix I, 10 CFR Part 50, for gaseous effluents.

4.0 RADIOLOGICAL ENVIRONMENTAL MONITORING PROGRAM

4.1 Monitoring Program - Implementation

Applicability

Applies to the radiological environmental monitoring program.

Objective

To define the requirements for implementation of the radiological environmental monitoring program.

Specification

CONTROLS

4.1.1 The Radiological Environmental Monitoring Program shall be conducted as specified in Table 4.1-1.

ACTIONS

4.1.2 With the Radiological Environmental Monitoring Program not being conducted as specified in Table 4.1-1, prepare and submit to the Commission, in the Annual Radiological Environmental Operating Report required by Technical Specification 5.6.2, a description of the reasons for not conducting the program as required and the plans for preventing a recurrence.

ACTIONS

4.1.3 With the level of radioactivity as the result of plant effluents in an environmental sampling medium at a specified location exceeding the reporting levels of Table 4.1-2 when averaged over any calendar quarter, prepare and submit to the Commission within 30 days, pursuant to ODCM Specification 9.5, a Special Report that identifies the cause(s) for exceeding the limit(s) and defines the corrective actions to be taken to reduce radioactive effluents so that the potential annual dose* to a member of the public is less than the calendar year limits of ODCM Specifications 2.4.1, 3.4.1, and 3.5.2.1. When more than one of the radionuclides in Table 4.1-2 are detected in the sampling medium, this report shall be submitted if:

$$\frac{\text{concentration (1)}}{\text{reporting level (1)}} + \frac{\text{concentration (2)}}{\text{reporting level (2)}} + \ldots \geq 1.0$$

When radionuclides other than those in Table 4.1-2 are detected and are the result of plant effluents, this report shall be submitted if the potential annual dose* to a member of the public is equal to or greater than the calendar year limits of ODCM Specifications 2.4.1, 3.4.1, and 3.5.2.1. This report is not required if the measured level of radioactivity was not the result of plant effluents; however, in such an event, the condition shall be reported and described in the Annual Radiological Environmental Operating Report.

* the methodology and parameters used to estimate the potential annual dose to a member of the public shall be indicated in this report.

ACTIONS

4.1.4 With milk or fresh leafy vegetable samples unavailable from one or more of the sample locations required by Table 4.1-1, identify locations for obtaining replacement samples and add them to the radiological environmental monitoring program within 30 days. The specific locations from which samples were unavailable may then be deleted from the monitoring program. Pursuant to Technical Specification 5.6.2, identify the cause of the unavailability of samples and identify the new location(s) for obtaining replacement samples in the next Annual Radioactive Effluent Release Report and also include in the report a revised figure(s) and table for the ODCM reflecting the new location(s).

4.1.5 The provisions of ODCM Specification 8.1 are not applicable.

4.1.6 Deviations are permitted from the required sampling schedule if specimens are unobtainable due to hazardous conditions, seasonal unavailability, or to malfunction of automatic sampling equipment. If the latter, every effort shall be made to complete corrective action prior to the end of the next sampling period.

Monitoring Program

The radiological environmental monitoring program required by this specification provides representative measurements of radiation and of radioactive materials in those exposure pathways and for those radionuclides that lead to the highest potential radiation exposures of members of the public resulting from the station operation. This monitoring program implements Section IV.B.2 of Appendix I to 10 CFR Part 50 and thereby supplements the radiological effluent monitoring program by verifying that the measurable concentrations of radioactive materials and levels of radiation are not higher than expected on the basis of the effluent measurements and the modeling of the environmental exposure pathways. Guidance for this monitoring program is provided by the Radiological Assessment Branch Technical Position on Environmental Monitoring. The initially specified monitoring program will be effective for at least the first three years of commercial operation. Following this period, program changes may be initiated based on operational experience.

The required detection capabilities for environmental sample analyses are tabulated in terms of the lower limits of detection (LLD). The LLDs required by Table 4.1-3 are considered optimum for routine environmental measurements in industrial laboratories. It should be recognized that the LLD is defined as an a priori (before the fact) limit representing the capability of a measurement system and not as a posteriori (after the fact) limit for a particular measurement.

Detailed discussion of the LLD, and other detection limits, can be found in HASL Procedures Manual, HASL-300 (revised annually), Currie, L. A., "Limits for Qualitative Detection and Quantitative Determination - Application to Radiochemistry," Anal. Chem. 40, 586-93 (1968), and Hartwell, J. K., "Detection Limits for Radioanalytical Counting Techniques, "Atlantic Richfield Hanford Company Report ARH-SA-215 (June 1975).

Table 4.1-1

RADIOLOGICAL ENVIRONMENTAL MONITORING PROGRAM

Exposure Pathway and/or Sample	Number of Representative Samples and Sample Locations	Sampling and Collection Frequency	Type and Frequency of Analysis
1. DIRECT RADIATION[a]	33 routine monitoring stations with two or more dosimeters or with one instrument for measuring and recording dose rate continuously, placed as follows:	Quarterly	Gamma dose quarterly.
	an inner ring of stations, one in each of the 16 meteorological sectors in the general area of the site boundary;		
	an outer ring of stations, one in each of the 16 meteorological sectors in the 6- to 8-km range from site;		
	area to serve as a control[b] station.		
2. AIRBORNE Radioiodine and Particulates	Samples from 5 locations 3 samples from close to the 3 site boundary locations, in different sectors, of the highest calculated annual average ground level D/Q.	Continuous sampler operation with sample collection weekly, or more frequently if required by dust loading.	Radioiodine Canister: I-131 analysis weekly. Particulate Sampler: Gross beta radioactivity analysis following filter change;[c] Gamma isotopic analysis[d] of composite (by location) quarterly.
	1 sample from the vicinity of a community having the highest calculated annual average ground level D/Q.		
	1 sample from a control[b] location, as for example 15-30 km distant and in the least prevalent wind direction.		

Table 4.1-1 (Continued)
RADIOLOGICAL ENVIRONMENTAL MONITORING PROGRAM

Exposure Pathway and/or Sample	Number of Representative Samples and Sample Locations	Sampling and Collection Frequency	Type and Frequency of Analysis
3. WATERBORNE a. Surface[a]	1 sample upstream control location[b] 1 sample downstream	Composite sample over 1-month period[f]	Gamma isotopic analysis[f] monthly. Composite for tritium analysis quarterly.
b. Ground[g]	2 samples	Quarterly	Gamma isotopic [f] and tritium analysis quarterly.
c. Sediment from shoreline	1 sample from downstream area with existing or potential recreational valve	Semiannually	Gamma isotopic analysis[f] semiannually.
4. INGESTION a. Milk	1 sample from milking animals within 5 km distance having the highest dose potential. If there are none, then, 1 sample from milking animals between 5 to 8 km distant where doses are calculated to be greater than 1 mrem per year[h].	Semimonthly when animals are on pasture, monthly at other times	Gamma isotopic[f] and I-131 analysis semimonthly when animals are on pasture; monthly at other times.
	1 sample from milking animals at a control location[h]. 15-30 km distant and in the least prevalent wind direction.		
b. Fish	1 sample of recreationally important species in vicinity of plant discharge area including at least one free swimmer and one bottom feeder.	Semiannually	Gamma isotopic analysis[f] on edible portions semiannually.
	1 sample of comparable species in areas not influenced by plant discharge to serve as control location.[h]		
c. Food Products	1 sample of each principal class of food products from any area that is irrigated by water in which liquid plant wastes have been discharged.	At time of harvest[f]	Gamma isotopic analyses[f] on edible portion
	Samples of 3 different kinds of broad leaf vegetation grown nearest each of two different offsite locations of highest predicted annual average ground level D/Q if milk sampling is not performed.	Monthly when available	Gamma isotopic[f] and I-131 analysis.
	1 sample of each of the similar broad leaf vegetation grown 15-30 km distant in the least prevalent wind direction if milk sampling is not performed.	Monthly when available	Gamma isotopic[f] and I-131 analysis.

TABLE NOTATION

[a]One or more instruments, such a as pressurized ion chamber, for measuring and recording dose rate continuously may be used in place of, or in addition to, integrating dosimeters. For the purposes of this table, a thermoluminescent dosimeter (TLD) is considered to be one phosphor; two or more phosphors in a packet are considered as two or more dosimeters. Film badges shall not be used as dosimeters for measuring direct radiation.

[b]The purpose of this sample is to obtain background information.

[c]Airborne particulate sample filters shall be analyzed for gross beta radioactivity 24 hours or more after sampling to allow for radon and thoron daughter decay. If gross beta activity in air particulate samples is greater than ten times the yearly mean of control samples, gamma isotopic analysis shall be performed on the individual samples.

[d]Gamma isotopic analysis means the identification and quantification of gamma-emitting radionuclides that may be attributable to the effluents from the facility.

[e]The "upstream sample" shall be taken at a distance beyond significant influence of the discharge. The "downstream" sample shall be taken in an area beyond but near the mixing zone.

[f]A composite sample is one which the quantity (aliquot) of liquid sampled is proportional to the quantity of flowing liquid and in which the method of sampling employed results in a specimen that is representative of the liquid flow. In this program composite sample aliquots shall be collected at time intervals that are very short (e.g., hourly) relative to the compositing period (e.g., monthly) in order to assure obtaining a representative sample.

[g]Ground water samples shall be taken when this source is tapped for drinking or irrigation purposes in areas where the hydraulic gradient or recharge properties are suitable for contamination.

[h]The dose shall be calculated for the maximum organ and age group, using the methodology and parameters in the ODCM.

[i]If harvest occurs more than once a year, sampling shall be performed during each discrete harvest. If harvest occurs continuously, sampling shall be monthly. Attention shall be paid to including samples of tuberous and root food products.

TABLE 4.1-2

REPORTING LEVELS FOR RADIOACTIVITY CONCENTRATIONS IN ENVIRONMENTAL SAMPLES

Radionuclide	Water (pCi/l)	Airborne (pCi/m^3)	Fish (pCi/Kg,wet)	Milk (pCi/l)	Food Products (pCi/Kg,wet)
H-3	3E+04				
Mn-54	1E+03		3E+04		
Fe-59	4E+02		1E+04		
Co-58	1E+03		3E+04		
Co-60	3E+02		1E+04		
Zn-65	3E+02		2E+04		
Zr-Nb-95	4E+02				
I-131	2E+00	9E-01		3E+00	1E+02
Cs-134	3E+01	1E+01	1E+03	6E+01	1E+03
Cs-137	5E+01	2E+01	2E+03	7E+01	2E+03
Ba-La-140	2E+02			3E+02	

TABLE 4.1-3

MAXIMUM VALUES FOR THE LOWER LIMITS OF DETECTION (LLD)[a]

Analysis	Water (pCi/l)	Airborne (pCi/m^3)	Fish (pCi/Kg,wet)	Milk (pCi/l)	Food Products (pCi/Kg,wet)	Sediment (pCi/Kg,dry)
gross beta	4E+00	1E-02				
H-3	3E+03					
Mn-54	1.5E+01		1.3E+02			
Fe-59	3E+01		2.6E+02			
Co-58,60	1.5E+01		1.3E+02			
Zn-65	3E+01		2.6E+02			
Zr-Nb-95	1.5E+01					
I-131[b]	1E+00	7E-02		1E+00	6E+01	
Cs-134	1.5E+01	5E-02	1.3E+02	1.5E+01	6E+01	1.5E+02
Cs-137	1.8E+01	6E-02	1.5E+02	1.8E+01	8E+01	1.8E+02
Ba-La-140	1.5E+01			1.5E+01		

Table Notation

[a]The LLD is defined, for purposes of these specifications, as the smallest concentration of radioactive material in a sample that will yield a net count, above system background, that will be detected with 95% probability with only 5% probability of falsely concluding that a blank observation represents a "real" signal.

For a particular measurement system, which may include radiochemical separation:

$$LLD = \frac{4.66\ S_b}{E \bullet V \bullet 2.22 \bullet Y \bullet \exp(-\lambda \Delta t)}$$

Where:

LLD is the "a priori" lower limit of detection as defined above, as picocuries per unit mass or volume.

S_b is the standard deviation of the background counting rate or of the counting rate of a blank sample as appropriate, as counts per minute,

E is the counting efficiency, as counts per disintegration,

V is the sample size in units of mass or volume,

2.22 is the number of disintegrations per minute per picocurie,

Y is the fractional radiochemical yield, when applicable,

λ is the radioactive decay constant for the particular radionuclide, and

Δt for environmental samples is the elapsed time between sample collection, or end of the sample collection period, and time of counting

Typical values of E, V, Y, and Δt should be used in the calculation.

Table Notation

It should be recognized that the LLD is defined as a priori (before the fact) limit representing the capability of a measurement system and not as an a posteriori (after the fact) limit for a particular measurement. Analysis shall be performed in such a manner that the stated LLDs will be achieved under routine conditions. Occasionally background fluctuations, unavoidable small sample sizes, the presence of interfering nuclides, or other uncontrollable circumstances may render these LLDs unachievable. In such cases, the contributing factors shall be identified and described in the Annual Radiological Environmental Operating Report pursuant to Technical Specification 5.6.2.

[b]LLD for drinking water samples. If no drinking water pathway exists, the LLD of gamma isotopic analysis may be used.

4.2 Land Use Census Implementation

Applicability

Applies to the land use census.

Objective

To define the requirements for the conduct of the land use census.

Specification

CONTROLS

4.2.1 A land use census shall be conducted and shall identify the location of the nearest milk animal, the nearest residence and the nearest garden of greater than 500 square feet producing fresh leafy vegetables in each of the 16 meteorological sectors within a distance of five miles.

ACTIONS

4.2.2 With a land use census identifying a location(s) that yields a calculated dose or dose commitment greater than the values currently being calculated in ODCM Specification 3.14.1, identify the new location(s) in the next Annual Radioactive Effluent Release report, pursuant to Technical Specification 5.6.3

4.2.3 With the land use census identifying a location which yields an annual calculated dose or dose commitment of a specific pathway which is 20% greater than that at a current sampling location:

a. add the new location(s) to the radiological environmental monitoring program within 30 days and,

b. if desired, delete the sampling location having the lowest calculated dose or dose commitments via the same exposure pathway, excluding the control station location, from the monitoring program after October 31 of the year in which the land use census was conducted, and

c. identify the new location(s) in the next Annual Radioactive Effluent Release Report, Technical Specification 5.6.3, including a revised figure(s) and table for the ODCM reflecting the new location(s).

BASES

Land Use Census

This specification is provided to ensure that changes in the use of areas at and beyond the Site Boundary are identified and that modifications to the monitoring program are made if required by the results of the census. This census satisfies the requirements of Section IV.B.3 of Appendix I to 10 CFR Part 50. Restricting the census to gardens of greater than 500 square feet provides assurance that significant exposure pathways via leafy vegetables will be identified and monitored since a garden of this size is the minimum required to produce the quantity (26 kg/year) of leafy vegetables assumed in Regulatory Guide 1.109, Revision 1 for consumption by a child. To determine this minimum garden size, the following assumptions were used: 1) that 20% of the garden was used for growing broad leaf vegetation (i.e., similar to lettuce and cabbage), and 2) a vegetation yield of 2 kg/square meter.

4.3 Monitoring Program - Sampling Requirement

Applicability

Applies to the radiological environmental monitoring program.

Objective

To ascertain that radiological environmental monitoring samples are collected and analyzed in accordance with the radiological environmental monitoring program.

Specification

SURVEILLANCE REQUIREMENTS

4.3.1 The radiological environmental monitoring samples shall be collected pursuant to Table 4.1-1 from the locations defined in the ODCM and shall be analyzed pursuant to the requirements of Tables 4.1-2 and 4.1-3.

4.4 Land Use Census Surveillance Requirements

Applicability

Applies to the land use census.

Objective

To ascertain that the land use census is conducted in accordance with the radiological environmental monitoring program.

Specification

SURVEILLANCE REQUIREMENTS

4.4.1 The land use census shall be conducted once per 12 months during the growing season, by door-to-door survey, aerial survey, by consulting local agriculture authorities or by broad leaf vegetation sampling of at least three different kinds of vegetation. This sampling may be performed at the site boundary in each of two different direction sectors with the highest predicted D/Qs in lieu of the garden census. Specifications for broad leaf vegetation sampling in Table 4.1-1, Item 4.C shall be followed, including analysis of control samples.

4.5 Analysis and Sample Point Description

Table 4.5-1 contains the sample point description, sampling and collection frequency, analysis, and analysis frequency for various exposure pathways in the vicinity of HBR for the Radiological Monitoring Program. Figures 4-1 and 4-2 show the location of the various sampling points.

At the time of initial preparation of this manual, the limiting cow milk location was 1.3 miles in the NE sector. As of the time of submittal of this manual, there is no longer a cow present at this location. The radiological environmental monitoring program has been altered to reflect this change. However, the X/Q, and D/Q values associated with this locatic have been retained for future reference.

Table 4.5-1

H. B. ROBINSON RADIOLOGICAL ENVIRONMENTAL MONITORING PROGRAM

Exposure Pathway and/or Sample	Sample Point	Sample Point Description, Distance, and Direction	Sampling and Collection Frequency	Analysis[1] Frequency	Analysis[1]
1. Airborne Particulates and Radioiodines	1.	Florence, S. C. (Control Station)[2] 26 miles ESE @ 119°	Continuous operating sampler with sample collection at least weekly	Weekly	I-131 for Air Cartridges
	2.	Information Center 0.2 miles S @ 180°		Weekly	Gross Beta[3]
	3.	Microwave tower 0.7 mile N @ 5°		Quarterly	Gamma Scan[4] of composite (by location)
	4.	Spillway 0.4 mile ESE @ 110°			
	5.	East Shore of lake across from plant intake Johnson's Landing 0.9 mile ENE @ 73°			
	6.	Information Center 0.3 mile SW @ 214°			
	7.	CP&L Hartsville substation, 6.3 miles ESE @ 109°			
	55.	South of the West Settling Pond, 0.3 miles SSE @ 159°			
2. Direct Radiation	1.	Florence, S. C. (Control Station)[2] 26 miles ESE @ 119°	Continuous measurement with readout at least once per quarter (TLDs)	Quarterly	Gamma Dose[5]

Table 4.5-1 (Continued)

H. B. ROBINSON RADIOLOGICAL ENVIRONMENTAL MONITORING PROGRAM

Exposure Pathway and/or Sample	Sample Point	Sample Point Description, Distance, and Direction	Sampling and Collection Frequency	Analysis[1] Frequency	Analysis[1]
2. Direct Radiation (continued)	2.	Information Center 0.2 mile S @ 180°	Continuous measurement with readout at least once per quarter (TLDs)	Quarterly	Gamma Dose[5]
	3.	Microwave tower 0.7 mile N @ 5°			
	4.	Spillway 0.4 mile ESE @ 110°			
	5.	East shore of lake across from plant intake Johnson's landing 0.9 mile ENE @ 73°			
	6.	Information Center 0.3 mile SW @ 214°			
	7.	CP&L Hartsville substation 6.3 miles ESE @ 109°			
	8.	Transmission tower 0.8 mile SSE.			
	9.	Transmission tower 1.0 mile S.			
	10.	The Church of God cemetery 1.0 mile WSW			
	11.	Old Camden Road 1.0 mile SW.			
	12.	Tree 1.2 miles SSW.			

Exposure Pathway and/or Sample	Sample Point	Sample Point Description, Distance, and Direction	Sampling and Collection Frequency	Analysis[1] Frequency	Analysis[1]
2. Direct Radiation (continued)	13.	Tree 1.0 mile W.	Continuous measurement with readout at least once per quarter (TLDs)	Quarterly	Gamma Dose[5]
	14.	Highway 151 at Pine Ridge Church 0.9 mile WNW.			
	15.	Tree directly adjacent to ash pond on CP&L properly 1.0 miles NW.			
	16.	Darlington County I.C. Turbine Plant 1.0 mile NNW.			
	17.	1.0 mile down Discharge Canal road at Old Unit One Weir 1.1 miles N.			
	18.	Black Creek 0.7 mile SE.			
	19.	Road #S-16-23 1.0 mile E.			
	20.	Road #S-16-39 1.3 miles ENE.			
	21.	Atkinson's landing 1.4 miles NE.			
	22.	Shady Rest Club 1.9 miles NNE.			
	23.	Road #S-16-39 1.2 miles ESE.			
	24.	Road #S-13-711 5.0 miles NW.			

Table 4.5-1 (Continued)

H. B. ROBINSON RADIOLOGICAL ENVIRONMENTAL MONITORING PROGRAM

Exposure Pathway and/or Sample	Sample Point	Sample Point Description, Distance, and Direction	Sampling and Collection Frequency	Analysis[1] Frequency	Analysis[1]
2. Direct Radiation (continued)	25.	Road #S-13-346 4.6 miles NNW.	Continuous measurement with readout at least once per quarter (TLDs)	Quarterly	Gamma Dose[5]
	26.	Road #S-13-346 5.0 miles N.			
	27.	Road #S-13-763 5.0 miles NNE.			
	28.	Road #S-13-39 4.8 miles NE.			
	29.	Road #S-16-20 4.1 mile ENE.			
	30.	Road #S-16-20 4.6 miles E.			
	31.	Lakeshore Drive 4.6 miles ESE.			
	32.	Transmission 4.5 miles SE.			
	33.	Road #S-16-493 4.6 miles SSE.			
	34.	Transmission pole on Road #S-16-772 4.6 miles S.			

Table 4.5-1 (Continued)

H. B. ROBINSON RADIOLOGICAL ENVIRONMENTAL MONITORING PROGRAM

Exposure Pathway and/or Sample	Sample Point	Sample Point Description, Distance, and Direction	Sampling and Collection Frequency	Analysis[1] Frequency	Analysis[1]
2. Direct Radiation (continued)	35.	Power pole on Road #S-31-51 4.4 miles SSW.	Continuous measurement with readout at least once per quarter (TLDs)	Quarterly	Gamma Dose[5]
	36.	Power pole 3/4 mile down paved road off Road #S-16-85. 4.7 miles SW.			
	37.	Transmission tower 5.0 miles WSW.			
	38.	Road S-16-231 next to Union Church 4.9 miles W.			
	39.	Power Pole 5.0 miles WNW.			
	55.	South of the West Settling Pond 0.3 miles SSE @ 159°			
	56.	North of the center of the ISFSI on a pine tree 0.4 miles N.			
3.Waterborne a. Surface Water	40.	Black Creek at Road 1623 0.6 mile ESE (Indicator).	Composite sample[6] over one-month period	Monthly	Gamma Scan[4] H-3
	41.	Black Creek (ControlStation)[2] 7.2 miles NNW.			
b. Groundwater	40.	Artesian well 0.6 miles ESE.	Grab Sample	Quarterly	Gamma Scan[4] H-3
	42.	Unit 1 or Unit 2 deep well			
c. Drinking water		Not required[7]			
d. Shoreline Sediment	44.	East Shore of Lake, Shady Rest Club 1.9 miles NNE.	Semiannually	Semiannually	Gamma Scan[4]

Table 4.5-1 (Continued)

H. B. ROBINSON RADIOLOGICAL ENVIRONMENTAL MONITORING PROGRAM

Exposure Pathway and/or Sample	Sample Point	Sample Point Description, Distance, and Direction	Sampling and Collection Frequency	Analysis[1] Frequency	Analysis[1]
4. Ingestion a. Milk	NA	(There are no milk samples available within 8 Km of Plant.The following broad-leaf vegetation are to be sampled and analyzed.)	NA	NA	NA
Broadleaf	50.	SSE Close to Site Boundary[9].	Monthly when available (3 different kinds of broad-leaf vegetation)	Each sample	Gamma Scan[4] I-131
	51.	SSW Close to Site Boundary[9].			
	52.	≥10 miles W, near Bethune (Control Station for Broad-leaf Vegetation).			
b. Fish	45.	Site varies within lake Robinson	Semiannually (collect comparable species at all three locations)	Each sample	Gamma Scan[4] Edible portion
	46.	Prestwood lake 4.9 miles ESE.			
	47.	Bee Lake (Control station)[2] 13 miles NW, May Lake 12.5 miles NNW, or Lake not influenced by plant discharge.			
c. Food Products leafy vegetables	54.	Auburndale Plantation[8] 10.1 miles E. (One sample of each principal class of irrigated food products).	Annual at harvest	Each sample	Gamma Scan[4]

2-2000

Table 4.5-1 (Continued)

FOOTNOTES

1. The LLD for each analysis is specified in Table 4.1-3 of the HBR ODCM.

2. Control stations are locations outside the influence of plant effluents.

3. Airborne particulate sample filter shall be analyzed for gross beta radioactivity 24 hours or more after sampling to allow for radon and thoron daughter decay. If gross beta activity in air particulate is greater than ten times the yearly mean of control samples, gamma isotopic analysis shall be performed on the individual samples.

4. Gamma scan means the identification and quantification of gamma-emitting radionuclides that may be attributable to the effluents from the facility.

5. Thermoluminescent dosimeter (TLD) is considered to be one phosphor; two or more phosphors in a packet are considered as two or more dosimeters.

6. Composite sample aliquots shall be collected at time interval that are short (5 or 6 times daily) relative to the compositing period (monthly in order to assure obtaining a representative sample).

7. Collection of drinking water samples is not required since there are not known reservoirs on Black Creek used for drinking purposes.

8. Water from Black Creek is sometimes used to irrigate food crops at Auburndale Plantation which is located 11 miles east @ 90° from the plant.

9. Sample Points 50 and 51 are the highest and the second highest D/Q values, respectively.

FIGURE 4-1

RADIOLOGICAL SAMPLE LOCATIONS NEAR SITE

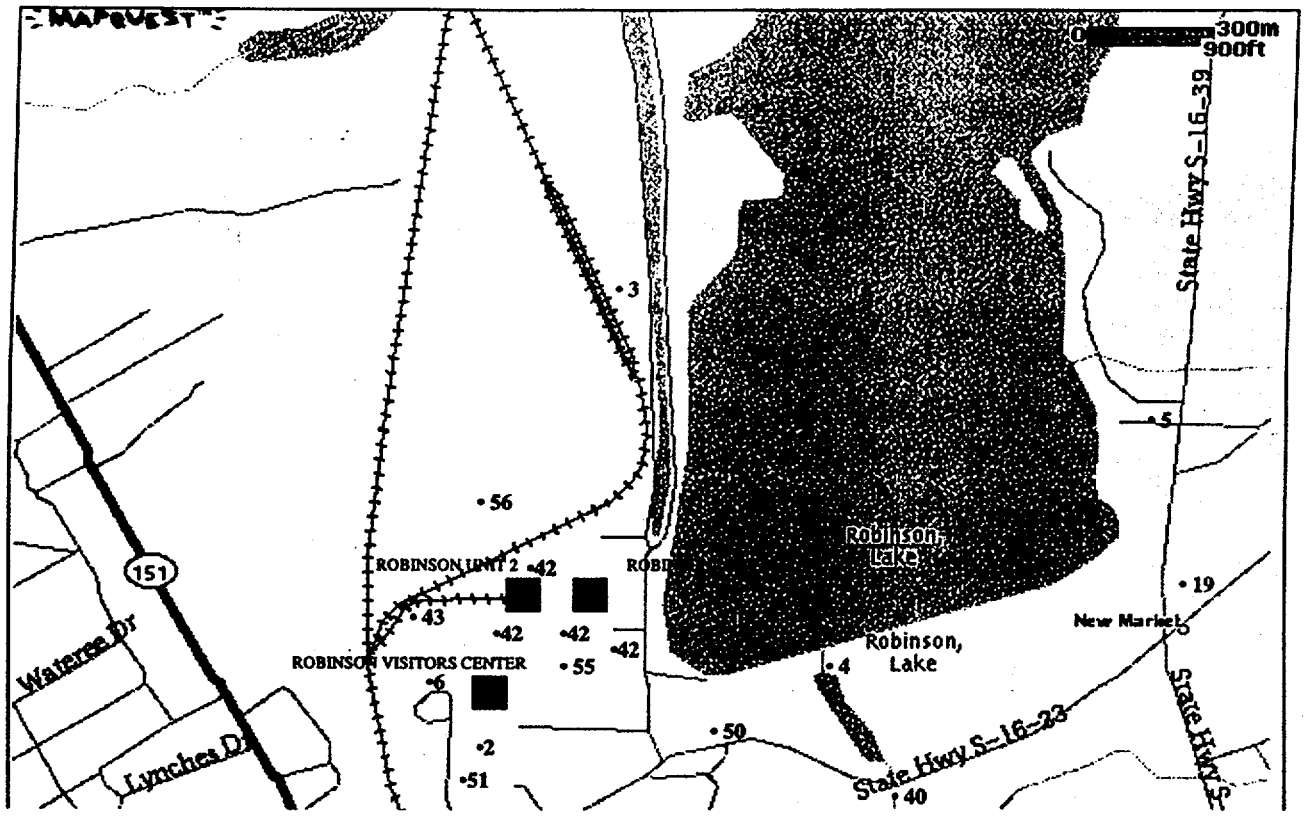

Stations 1 through 7 and 55 include air sampling and thermoluminescent dosimeters.

Sample Types	**Sample Locations**
Air Cartridge & Particulate	1-7, 55
Shoreline Sediment	44, 57
Ground Water	40, 42,
Broadleaf Vegetation	50, 51,52
Surface Water	40,41,
Thermoluminescent Dosimeter	1-39, 55,56
Fish	45-47
Food Products	49, 54, 58
Aquatic Vegetation & Bottom Sediment	41, 45, 46, 54

FIGURE 4-2
RADIOLOGICAL SAMPLE DISTANT LOCATIONS

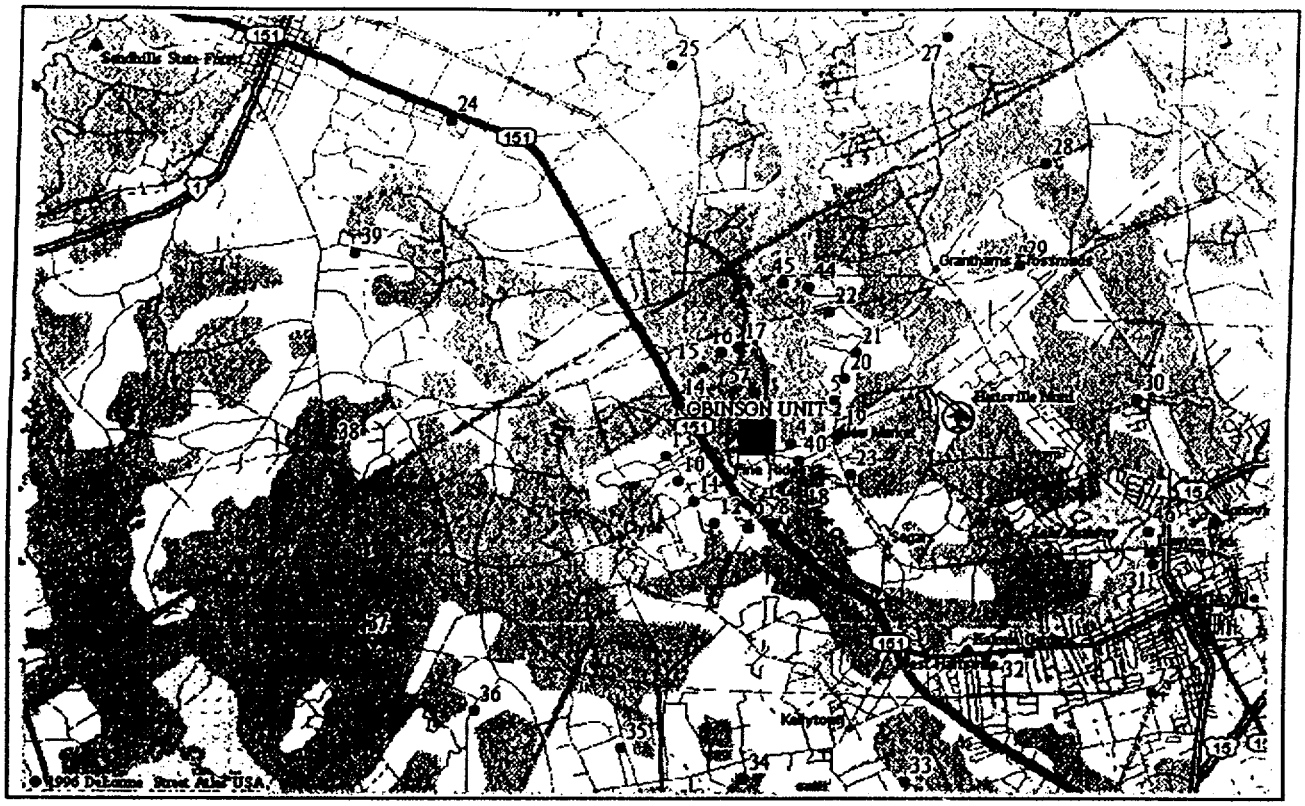

Stations not shown include 1,7,26,41, 47(varies), 49(varies), 52, 54, and 58(varies). Stations 1 through 7 and 55 include air sampling and thermoluminescent dosimeters.

Sample Types	**Sample Locations**
Air Cartridge & Particulate	1-7, 55
Shoreline Sediment	44, 57
Ground Water	40, 42,
Broadleaf Vegetation	50, 51,52
Surface Water	40,41,
Thermoluminescent Dosimeter	1-39, 55,56
Fish	45-47
Food Products	49, 54, 58
Aquatic Vegetation & Bottom Sediment	41, 45, 46, 54

1-99

5.0 INTERLABORATORY COMPARISON PROGRAM

Applicability

Applies to the interlaboratory comparison program of like media.

Objective

To ensure precision and accuracy of laboratory analyses.

Specification

CONTROLS

5.1 Analyses shall be performed on radioactive materials supplied as a part of an Interlaboratory Comparison Program of like media within the environmental program as per Table 4.1-1 and pursuant to ODCM Specification 5.2, 5.3, and 5.4.

ACTIONS

5.2 With analyses not being performed as required above, report the corrective action taken to prevent a recurrence to the Commission in the Annual Radiological Environmental Operating Report pursuant to Technical Specification 5.6.2.

5.3 The provisions of ODCM Specification 8.1 are not applicable.

SURVEILLANCE REQUIREMENTS

5.4 The Interlaboratory Comparison Program shall be described in the ODCM. A summary of the results obtained as part of the above required Interlaboroatory Comparison Program shall be included in the Annual Radiological Environmental Operating Report pursuant to Technical Specification 5.6.2.

BASES

Interlaboratory Comparison Program

The requirement for participation in an approved Interlaboratory Comparison Program is provided to ensure that independent checks on the precision and accuracy of the measurements of radioactive material in environmental sample matrices are performed as part of the quality assurance program for environmental monitoring in order to demonstrate that the results are valid for the purposes of Section IV.B.2 of Appendix I to 10 CFR Part 50.

5.5 INTERLABORATORY COMPARISON STUDIES - Program Requirements

5.5.1 OBJECTIVE

The objective of this program is to evaluate the total laboratory analysis process by comparing results with results obtained by a separate laboratory or laboratories for an equivalent sample.

5.6 PROGRAM

5.6.1 Environmental Sample Analyses Comparison Program

Environmental samples from the HBR environs are to be analyzed by the Harris Energy & Environmental Center or by a qualified contracting laboratory. These laboratories will participate at least annually in a nationally recognized interlaboratory comparison study. The results of the laboratories' performances in the study will be provided to HBR E&RC and will be included in the Annual Radiological Environmental Operating Report.

5.6.2 Effluent Release Analyses Program

HBR E&RC will perform sample analyses for gamma-emitting radionuclides in effluent releases. The E&RC radiochemistry laboratory will participate annually in a corporate interlaboratory comparison study or an equivalent study. The results of these studies will be provided to the NRC upon request.

5.6.3 Abnormal Results

If the CP&L laboratory or vendor laboratory results lie at greater than three sigma from the "recognized value", an evaluation will be performed to identify any recommended remedial actions to reduce anomalous errors. Complete documentation on the evaluation will be available to HBR and will be provided to the NRC upon request.

6.0 COMPLIANCE WITH 40 CFR PART 190

6.1 Requirements For Compliance With 40 CFR Part 190 - Radioactive Effluents From Uranium Fuel Cycle Sources

Applicability

Applies to radioactive effluents from uranium fuel cycle sources.

Objective

To define the dose limits of 40 CFR 190 for radioactive effluents from uranium fuel cycle sources.

Specifications

CONTROLS

6.1.1 The dose commitment to any member of the public, due to releases of licensed materials and radiation, from uranium fuel cycle sources shall be limited to ≤25 mrem to the total body or any organ except the thyroid, which shall be limited to ≤75 mrem over 12 consecutive months. This specification is applicable to Robinson Unit 2 only for the area within a five mile radius around the Robinson Plant.

ACTIONS

6.1.2 With the calculated doses from the release of the radioactive materials in liquid or gaseous effluents exceeding twice the limits of OCDM Specification 2.4.1.a, 2.4.1.b, 3.4.1.a, 3.4.1.b, 3.5.2.1.a, or 3.5.2.1.b, calculations should be made including direct radiation contributions from the reactor unit and from outside storage tanks to determine whether the above limits of ODCM Specification 6.1.1 have been exceeded. If such is the case, prepare and submit to the Commission within 30 days, pursuant to ODCM Specification 9.3.d, a Special Report that defines the corrective action to be taken to reduce subsequent releases to prevent recurrence of exceeding the above limits and includes the schedule for achieving conformance with the above limits.

This Special Report, as defined in 10 CFR Part 20.2203(a)(4), shall include an analysis that estimates the radiation exposure (dose) to a member of the public from uranium fuel cycle sources, including all effluent pathways and direct radiation, for the calendar year that includes the release(s) covered by this report. It shall also describe levels of radiation and concentrations of radioactive material involved, and the cause of the exposure levels or concentrations. If the estimated dose(s) exceeds the above limits, and if the release condition resulting in violation of 40 CFR Part 190 has not already been corrected, the Special Report shall include a request for a variance in accordance with the provisions of 40 CFR Part 190. Submittal of the report is considered a timely request, and a variance is granted until staff action on the same request is complete.

6.1.3 The provisions of ODCM Specification 8.1 are not applicable.

Compliance with 40 CFR Part 190 - Radioactive Effluents From Uranium Fuel Cycle Sources

This specification is provided to meet the dose limitations of 40 CFR Part 190 that have been incorporated into 10 CFR Part 20 by 46 FR 18525. The specification requires the preparation and submittal of a Special Report whenever the calculated doses from plant generated radioactive effluents and direct radiation exceed 25 mrems to the total body or any organ, except the thyroid, which shall be limited to less than or equal to 75 mrems. It is highly unlikely that the resultant dose to a member of the public will exceed dose limits of 40 CFR Part 190 if the reactor remains within twice the dose design objectives of Appendix I, and if direct radiation doses from the reactor unit and outside storage tanks are kept small. The Special Report will describe a course of action that should result in the limitation of the annual dose to a member of the public to within the 40 CFR part 190 limits. For the purposes of the Special Report, it may be assumed that the dose commitment to the member of the public from other uranium fuel cycle sources is negligible, with the exception that dose contributions from other nuclear fuel cycle facilities at the same site or within a radius of 8 km must be considered. If the dose to any member of the public is estimated to exceed the requirements of 40 CFR Part 190, the Special Report with a request for a variance (provided the release conditions resulting in violation of 40 CFR Part 190 have not already been corrected), in accordance with the provisions of 40 CFR Part 190.11 and 10 CFR Part 20.2203(a)(4), is considered to be a timely request and fulfills the requirements of 40 CFR Part 190 until NRC staff action is completed. The variance only relates to the limits of 40 CFR Part 190, and does not apply in any way to the other requirements for dose limitation of 10 CFR Part 20, as addressed in ODCM Specifications 2.2.1 and 3.2.1. An individual is not considered a member of the public during any period in which he/she is engaged in carrying out any operation that is part of the nuclear fuel cycle.

6.2 TOTAL DOSE (40 CFR 190 CONFORMANCE)

6.2.1 COMPLIANCE WITH 40 CFR 190

Compliance with 40 CFR 190 as prescribed by ODCM Specification 6.1 is to be demonstrated only when one or more of ODCM Specifications 2.4.1.a, 2.4.1.b, 3.4.1.a, 3.4.1.b, 3.5.2.1.a, and 3.5.2.1.b is exceeded by a factor of 2. Once this occurs the Company has 30 days to submit this report in accordance with ODCM Specification 9.3.

6.2.2 CALCULATIONS EVALUATING CONFORMANCE WITH 40 CFR 190

To perform the calculations to evaluate conformance with 40 CFR 190, an effort is made to develop doses that are realistic by removing assumptions that lead to overestimates of dose to a MEMBER OF THE PUBLIC (i.e., calculations for compliance with 10 CFR 50, App.I). To accomplish this the following calculational rules are used:

1. Doses to a MEMBER OF THE PUBLIC via the liquid release pathway will be calculated.

2. Doses to a MEMBER OF THE PUBLIC due to a milk pathway will be evaluated only as can be shown to exist. Otherwise, doses via this pathway will be estimated as ≤1 mrem/yr.

3. Environmental sampling data which demonstrate that no pathway exists may be used to delete a pathway to man from a calculation.

4. To sum numbers represented as "less than" (<), use the value of the largest number in the group.

   (i.e. <5 + <1 + <1 + <3 = 5)

5. When doses via direct radiation are added to doses via inhalation pathway, they will be calculated for the same distance in the same sector.

6. The calculational locations for a MEMBER OF THE PUBLIC will only be at residences or places of employment.

   NOTE: Additional assumptions may be used to provide situation-specific parameters, provided they are documented along with their concomitant bases.

6.3 CALCULATIONS OF TOTAL BODY DOSE

Estimates will be made for each of the following exposure pathways to the same location by age class. Only those age classes known to exist at a location are considered.

6.3.1 Direct Radiation

The component of dose to a MEMBER OF THE PUBLIC due to direct radiation will be determined by:

1. Determine the direct radiation dose at the plant boundary in each sector, $D_{B,\theta}$.

2. Extrapolate that dose to the calculational location as follows:

$$D_{L,\theta} = \frac{D_{B,\theta}(1.49\,E+6)}{(X_{L,\theta})^2}$$

$D_{L,\theta}$	=	dose at calculational location in sector θ.
1.49E+6	=	square of mean distance to the site boundary (1220 m).
$X_{L,\theta}$	=	Distance to calculational locations in sector θ in meters.

6.3.2 Inhalation Dose

The inhalation dose will be determined at the calculational locations for each age class at risk according to the methods outlined in Section 3.5 of this manual.

6.3.3 Ingestion Pathway

The dose via the ingestion pathway will be calculated at the consumer locations for the consumers at risk. If no milk pathway exits in a sector, the dose via this pathway will be treated as <1 mrem/yr.

6.3.4 Other Uranium Fuel Cycle Sources

The dose from other fuel cycle sources will be treated as <1 mrem/yr.

6.4 THYROID DOSE

The dose of the thyroid will be calculated for each sector as the sum of inhalation dose and milk ingestion dose (if existing). The calculational methods will be those identified in Section 3.5 of this manual.

6.5 DOSE PROJECTIONS

Dose projections are to incorporate planned plant operations such as power reduction or outages for the projected period.

6.6 Radioactive Effluents From Uranium Fuel Cycle Sources-Cumulative Doses

Applicability

Applies to the determination of cumulative doses from radioactive effluents from uranium fuel cycle sources.

Objective

To ascertain that cumulative doses from radioactive effluents from uranium fuel cycle sources are maintained as low as reasonably achievable and within allowable limits.

Specification

SURVEILLANCE REQUIREMENTS

6.6.1 Cumulative dose contributions from liquid and gaseous effluents shall be determined in accordance with ODCM Specifications 2.4.1, 3.4.1, and 3.5.2.1 in accordance with the methodology and parameters in the ODCM. For the purposes of this Surveillance Requirement, it may be assumed that fuel cycle sources are negligible, with the exception that dose contributions from other nuclear fuel cycle facilities at the same site or within a radius of 5 miles must considered. In addition, an individual is not considered a member of the public during any period in which he/she is engaged in carrying out any operation which is part of the nuclear fuel cycle.

6.6.2 Cumulative dose contributions from direct radiation from the reactor units and from radwaste storage tanks shall be determined in accordance with the methodology and parameters in the ODCM. This requirement is applicable only under conditions set forth in ODCM Specification 6.1.2.

7.0 DEFINITIONS

The following frequently used terms are defined for the uniform interpretation of the specifications.

7.1 RATED THERMAL POWER

RTP shall be a total reactor core heat transfer (RTP) rate to the reactor coolant of 2300 MWt.

7.2 MODE

MODE - A mode shall be as required by Technical Specifications.

7.3 OPERABLE - OPERABILITY

A system, subsystem, train, component, or device shall be OPERABLE or have OPERABILITY when it is capable of performing its specified safety function(s) and when all necessary attendant instrumentation, controls, normal or emergency electrical power, cooling and seal water, lubrication, and other auxiliary equipment that are required for the system, subsystem, train, component, or device to perform its specified safety function(s) are also capable of performing their related support function(s).

7.4 INSTRUMENTATION SURVEILLANCE

7.4.1 Action

Action shall be that part of a specification which prescribes remedial measures required under designated conditions.

7.4.2 Channel Calibration

A CHANNEL CALIBRATION shall be the adjustment, as necessary, of the channel so that it responds within the required range and accuracy to known input. The CHANNEL CALIBRATION shall encompass the entire channel, including the required sensor, alarm, interlock, display, and trip functions.

7.4.3 Channel Check

A CHANNEL CHECK shall be the qualitative assessment, by observation, of channel behavior during operation. This determination shall include, where possible, comparison of the channel indication and status to other indications or status derived from independent instrument channels measuring the same parameter.

7.4.4 Channel Operational Test (COT)

A COT shall be the injection of a simulated or actual signal into the channel as close to the sensor as practicable to verify the OPERABILITY of required alarm, interlock, display, and trip functions. The COT shall include adjustments, as necessary, of the required alarm, interlock, and trip setpoints so that the setpoints are within the required range and accuracy.

7.4.5 Source Check

A source check shall be the qualitative assessment of channel response when the channel sensor is exposed to a radioactive source.

7.5 GASEOUS RADWASTE TREATMENT SYSTEM

The Gaseous Radwaste Treatment System is the system designed and installed to reduce radioactive gaseous effluents by collecting primary coolant system off-gases from the primary system and providing for delay or holdup for the purpose of reducing the total radioactivity prior to release to the environment.

7.6 VENTILATION EXHAUST TREATMENT SYSTEM

The Ventilation Exhaust Treatment System is the system designed and installed to reduce gaseous radioiodine or radioactive material in particulate form in effluents by passing ventilation or vent exhaust gases through charcoal absorbers and/or HEPA filters prior to their release to the environment. Engineered Safety Feature (ESF) atmospheric cleanup systems are not considered to be Ventilation Exhaust Treatment System components.

7.7 OFFSITE DOSE CALCULATION MANUAL

a. The ODCM shall contain the methodology and parameters used in the calculation of offsite doses resulting from radioactive gaseous and liquid effluents, in the calculation of gaseous and liquid effluent monitoring alarm and trip setpoints, and in the conduct of the radiological environmental monitoring program; and

b. The ODCM shall also contain the radioactive effluent controls and radiological environmental monitoring activities, and descriptions of the information that should be included in the Annual Radiological Environmental Operating, and Radioactive Effluent Release Reports required by Specification 5.6.2 and Specification 5.6.3.

c. Licensee initiated changes to the ODCM:

1. Shall be documented and records of reviews performed shall be retained. This documentation shall contain:

   (a) sufficient information to support the change(s) together with the appropriate analyses or evaluations justifying the change(s), and

   (b) a determination that the change(s) maintain the levels of radioactive effluent control required by 10 CFR 20.1302, 40 CFR 190, 10 CFR 50.36a, and 10 CFR 50, Appendix I, and do not adversely impact the accuracy or reliability of effluent, dose, or setpoint calculations;

2. Shall become effective after the approval of the Plant Manager; and

3. Shall be submitted to the NRC in the form of a complete, legible copy of the entire ODCM as a part of or concurrent with the Radioactive Effluent Release Report for the period of the report in which any change in the ODCM was made. Each change shall be identified by markings in the margin of the affected pages, clearly indicating the area of the page that was changed, and shall indicate the date (i.e., month and year) the change was implemented.

7.8 DOSE EQUIVALENT I-131

The Dose Equivalent I-131 shall be that concentration of I-131 (microcurie/gram) which alone would produce the same thyroid dose as the quantity and isotopic mixture of I-131, I-132, I-133, I-134, and I-135 actually present. The thyroid dose conversion factors used for this calculation shall be those listed in NRC Regulatory Guide 1.109, Revision 1, October 1977.

7.9 PURGE - PURGING

Purge or purging is the controlled process of discharging air or gas from a confinement to maintain temperature, pressure, humidity, concentration or other operating condition, in such a manner than replacement air or gas is required to purify the confinement.

7.10 VENTING

Venting is the controlled process of discharging air or gas from a confinement to maintain temperature, pressure, humidity, concentration or other operating condition, in such a manner that replacement air or gas is not provided or required during venting. Vent, used in system names, does not imply a venting process.

7.11 SITE BOUNDARY

The site boundary shall be that line beyond which the land is not owned, leased, or otherwise controlled by the licensee, as defined by Figure 7-1.

7.12 MEMBER(S) OF THE PUBLIC

Member(s) of the public shall include all individuals who by virtue of their occupational status have no formal association with the plant. This category shall include non-employees of the licensee who are permitted to use portions of the site for recreational, occupational or other purposes not associated with plant function. This category shall not include non-employees such as vending machine servicemen, or postmen who, as part of their formal job function, occasionally enter an area that is controlled by the licensee for the purposes of protection of individuals from exposure to radiation and radioactive materials.

7.13 UNRESTRICTED AREA

Unrestricted area shall be any area at or beyond the Site Boundary to which access is not controlled by the licensee for purposes of protection of individuals from exposure to radiation and radioactive materials, or any area within the Site Boundary used for residential quarters or for industrial, commercial, institutional, and/or recreational purposes.

FIGURE 7-1
PLANT SITE BOUNDARY AND EXCLUSION ZONE

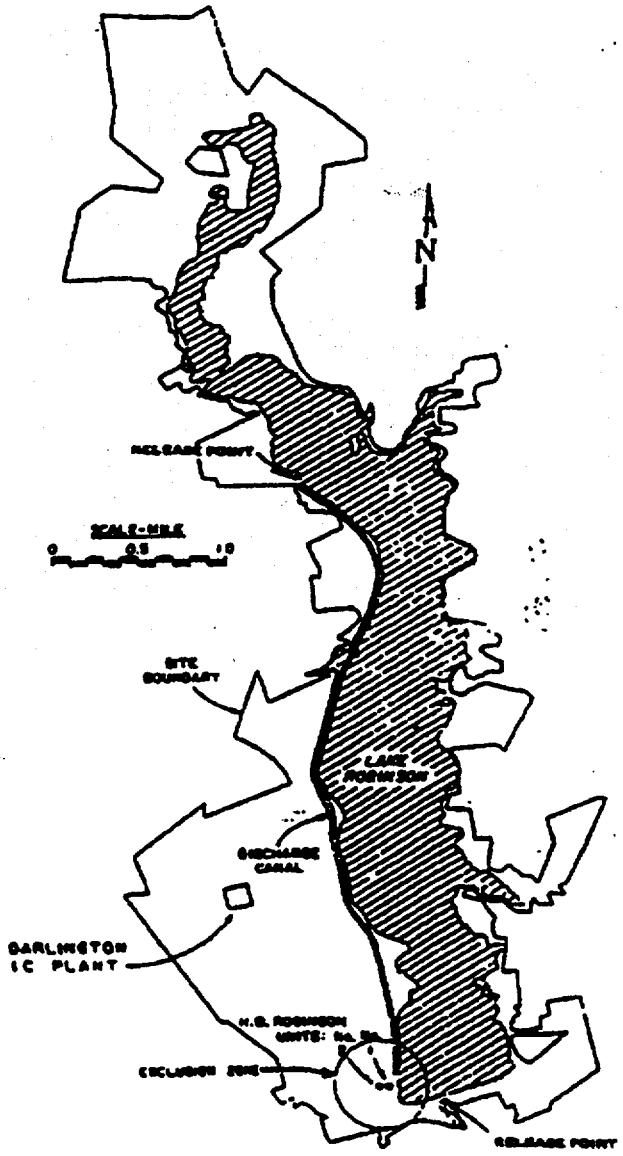

4-99

8.0 CONROLS APPLICABILITY and SURVEILLANCE REQUIREMENTS

8.1 CONTROLS APPLICABILITY

CONTROL 8.1.1 CONTROLS shall be met during the MODES or other specified conditions in the Applicability, except as provided in CONTROL 8.1.2.

CONTROL 8.1.2 Upon discovery of a failure to meet an CONTROL, the Required COMPENSATORY MEASURES of the associated Conditions shall be met, except as provided in CONTROL 8.1.5.

If the CONTROL is met or is no longer applicable prior to expiration of the specified Completion Time(s), completion of the Required Action(s) is not required unless otherwise stated.

CONTROL 8.1.3 When an CONTROL is not met and the associated COMPENSATORY MEASURES are not met, an associated ACTION is not provided, or if directed by the associated COMPENSATORY MEASURES, the unit shall be placed in a MODE or other specified condition in which the CONTROL is not applicable. Action shall be initiated within 1 hour to place the unit, as applicable, in:

a. MODE 3 within 7 hours;

b. MODE 4 within 13 hours; and

c. MODE 5 within 37 hours.

Exceptions to this Specification are stated in the individual Specifications.

Where corrective measures are completed that permit operation in accordance with the CONTROL or COMPENSATORY MEASURES, completion of the COMPENSATORY MEASURES required by CONTROL 8.1.3 is not required.

CONTROL 3.0.3 is only applicable in MODES 1, 2, 3, and 4.

CONTROL 8.1.4 When an CONTROL is not met, entry into a MODE or other specified condition in the Applicability shall not be made except when the associated COMPENSATORY MEASURES to be entered permit continued operation in the MODE or other specified condition in the Applicability for an unlimited period of time.

CONTROL 8.1.4 (continued)

This Specification shall not prevent changes in MODES or other specified conditions in the Applicability that are required to comply with COMPENSATORY MEASURES or that are part of a shutdown of the unit.

Exceptions to this Specification are stated in the individual Specifications. These exceptions allow entry into MODES or other specified conditions in the Applicability when the associated COMPENSATORY MEASURES to be entered allow unit operation in the MODE or other specified condition in the Applicability only for a limited period of time.

CONTROL 8.1.4 is only applicable for entry into a MODE or other specified condition in the Applicability in MODES 1, 2, 3,and 4.

CONTROL 8.1.5

Equipment removed from service or declared inoperable to comply with COMPENSATORY MEASURES may be returned to service under administrative control solely to perform testing required to demonstrate its OPERABILITY or the OPERABILITY of other equipment. This is an exception to CONTROL 8.1.2 for the system returned to service under administrative control to perform the testing required to demonstrate OPERABILITY.

8.2 SURVEILLANCE REQUIREMENTS

SR 8.2.1

SRs shall be met during the MODES or other specified conditions in the Applicability for individual CONTROLS, unless otherwise stated in the SR. Failure to meet a Surveillance, whether such failure is experienced during the performance of the Surveillance or between performances of the Surveillance, shall be failure to meet the CONTROL. Failure to perform a Surveillance within the specified Frequency shall be failure to meet the CONTROL except as provided in SR 8.2.3. Surveillances do not have to be performed on inoperable equipment or variables outside specified limits.

SR 8.2.2

The specified Frequency for each SR is met if the Surveillance is performed within 1.25 times the interval specified in the Frequency, as measured from the previous performance or as measured from the time a specified condition of the Frequency is met.

For Frequencies specified as "once," the above interval extension does not apply.

If a Completion Time requires periodic performance on a "once per . . ." basis, the above Frequency extension applies to each performance after the initial performance.

Exceptions to this Specification are stated in the individual Specifications.

SR 8.2.3 If it is discovered that a Surveillance was not performed within its specified Frequency, then compliance with the requirement to declare the CONTROL not met may be delayed, from the time of discovery, up to 24 hours or up to the limit of the specified Frequency, whichever is less. This delay period is permitted to allow performance of the Surveillance.

If the Surveillance is not performed within the delay period, the CONTROL must immediately be declared not met, and the applicable Condition(s) must be entered.

When the Surveillance is performed within the delay period and the Surveillance is not met, the CONTROL must immediately be declared not met, and the applicable Condition(s) must be entered.

SR 8.2.4 Entry into a MODE or other specified condition in the Applicability of an CONTROL shall not be made unless the CONTROL's Surveillances have been met within their specified Frequency. This provision shall not prevent entry into MODES or other specified conditions in the Applicability that are required to comply with COMPENSATORY MEASURES or that are part of a shutdown of the unit.

SR 8.2.4 is only applicable for entry into a MODE or other specified condition in the Applicability in MODES 1, 2, 3, and 4.

8.2.5 Surveillance Requirements shall be applicable as follows in Table 8.2-1:

TABLE 8.2-1

Surveillance Requirements

Frequency	Time Interval
P	Completed prior to making a radioactive materials release.
D	At least once per 24 hours.
W	At least once per 7 days.
M	At least once per 31 days.
Q	At least once per 92 days.
R	At least once per 18 months.

9.0 REPORTING REQUIREMENTS

9.1 Annual Radioactive Effluent Release Report

Routine radioactive effluent release reports covering the operation of the unit during the previous twelve months shall be submitted within twelve months of the previous report in accordance with Technical Specification 5.6.3. The report shall be submitted by May 1 of each year. Those portions of the report shall include:

9.1.1 A summary of the quantities of radioactive liquid and gaseous effluent and solid waste released from the unit as outlined in Regulatory Guide 1.21, "Measuring, Evaluating, and Reporting Radioactivity in Solid Wastes and Radioactive Materials in Liquid and Gaseous Effluents from Light Water Cooled Nuclear Power Plants" (Revision 1, June 1974), with data summarized on a quarterly basis following the format of Appendix B thereof.

9.1.2 The Radioactive Effluent Release Report shall include an annual summary of hourly meteorological data collected over the previous year. This annual summary may be either in the form of an hour-by-hour listing on magnetic tape of wind speed, wind direction, atmospheric stability, and precipitation (if measured), or in the form of joint frequency distributions of wind speed, wind direction, and atmospheric stability.* This same report shall include an assessment of the radiation doses due to the radioactive liquid and gaseous effluents released from the unit or station during the previous calendar year. This same report shall also include an assessment of the radiation doses from radioactive liquid and gaseous effluents to members of the public due to their activities inside the site boundary (Figure 7.1-1) during the report period. All assumptions used in making these assessments, i.e., specific activity, exposure time and location shall be include in these reports. The meteorological conditions concurrent with the time of release of radioactive materials in gaseous effluents, as determined by sampling frequency and measurement, shall be used for determining the gaseous pathway doses. [For ORs: approximate and conservative approximate methods are acceptable.] The assessment of radiation doses shall be performed in accordance with the methodology and parameters in the Offsite Dose Calculation Manual (ODCM).

9.1.3 The Radioactive Effluent Release Report shall also include an assessment of radiation doses to the likely most exposed member of the public from reactor releases and other nearby uranium fuel cycle sources, including doses from primary effluent pathways and direct radiation, for the previous calendar year to show conformance with 40 CFR Part 190, Environmental Radiation Protection Standards for Nuclear Power Operation.

---

* In lieu of submission with the Radioactive Effluent Releases Report, the licensee has the option of retaining this summary of required meteorological data on site in a file that shall be provided to the NRC upon request.

9.1.4 The Radioactive Effluent Release Report shall include the following information for each class of solid waste (as defined by 10 CFR Part 61) shipped offsite during the report period:

a. Container volume,
b. Total curie quantity (specify whether determined by measurement or estimate),
c. Principal radionuclides (specify whether determined by measurement or estimate),
d. Source of waste and processing employed (e.g., dewatered spent resin, compacted dry waste, evaporator bottoms),
e. Type of container (e.g., LSA, Type A, Type B, Large Quantity), and
f. Solidification agent or absorbent (e.g., cement, urea formaldehyde).

9.1.5 The Radioactive Effluent Release Report shall include a list and description of unplanned releases from the site to unrestricted areas of radioactive materials in gaseous and liquid effluents made during the reporting period.

9.1.6 The Radioactive Effluent Release Report shall include any changes made during the reporting period to the Process Control Program (PCP) and to the Offsite Dose Calculation Manual (ODCM), as well as a listing of new locations for dose calculations and/or environmental monitoring identified by the land use census pursuant to ODCM Specification 4.2.2.

9.1.7 Changes to the radioactive waste systems (liquid, gaseous, and solid) shall be reported to the Commission in the Annual Radioactive Effluent Release Report for the period in which the evaluation was reviewed by the Plant Nuclear Safety Committee (PNSC).* The discussion of each change shall contain:

a. A summary of the evaluation that led to the determination that the change could be made in accordance with 10 CFR Part 50.59;

b. Sufficient detailed information to totally support the reason for the change without benefit of additional or supplemental information;

c. A detailed description of the equipment, components and processes involved and the interfaces with other plant systems;

d. An evaluation of the change, which shows the predicted releases of radioactive materials in liquid and gaseous effluents and/or quantity of solid waste that differ from those previously predicted in the license application and amendments thereto;

e. An evaluation of the change, which shows the expected maximum exposures to an individual in the unrestricted area and to the general population that differ from those previously estimated in the license application and amendments thereto;

f. A comparison of the predicted releases of radioactive materials, in liquid and gaseous effluents and in solid waste, to the actual releases for the period prior to when the changes are to be made;

g. An estimate of the exposure to plant operating personnel as a result of the change; and

---

* The licensee may chose to submit the information called for in this Specification as part of the annual FSAR update.

h. Documentation of the fact that the change was reviewed and found acceptable by the PNSC.

9.1.8 Changes to the radioactive waste systems (liquid, gaseous, and solid) shall become effective upon review and acceptance by the PNSC.

9.2 Annual Radiological Environmental Operating Report

Routine radiological environmental operating reports covering the operation of the unit during the previous calendar year shall be submitted prior to May 15 of each year in accordance with Technical Specification 5.6.2. With the radiological environmental monitoring program not being conducted as specified in Table 4.1-1, a description of the reasons for not conducting the program as required and the plans for preventing a recurrence shall be included.

The Annual Radiological Environmental Operating Reports shall include summaries, interpretations, and analysis of trends of the results of the radiological environmental surveillance activities for the report period, including a comparison with preoperational studies, operational controls (as appropriate), and previous environmental surveillance reports and an assessment of the observed impacts of the plant operations on the environment. The reports shall also include the results of land use censuses required by ODCM Specification 4.2.

The Annual Radiological Environmental Operating Reports shall include the results of analysis of all radiological environmental samples and of all environmental radiation measurements taken during the period pursuant to the locations specified in the Table and Figures in the ODCM, as well as summarized and tabulated results of these analyses and measurements in the format of the table in the Radiological Assessment Branch Technical Position, Revision 1, November 1979. In the event that some individual results are not available for inclusion with the report, the report shall be submitted noting and explaining the reasons for the missing results. The missing data shall be submitted as soon as possible in a supplementary report.

The reports shall also include the following: a summary description of the radiological environmental monitoring program: at least two legible maps* covering all sampling locations keyed to a table giving distances and directions from the centerline of the reactor, the results of licensee participation in the Interlaboratory Comparison Program, required by ODCM Specification 5.0; discussion of all deviations from the sampling schedule of Table 4.1-1; and discussion of all analyses in which the LLD required by Table 4.1-3 was not achievable.

9.3 Special Radiological Effluent Reports

The Special radiological effluent reports discussed below shall be the subject of written reports to the NRC within 30 days of the occurrence of the event.

a. Exceeding any of the limits prescribed by ODCM Specification 2.4.1, 3.4.1, and/or 3.5.2.1. This report shall in clude the following information:

   1. The cause for exceeding the limit(s).
   2. The corrective action(s) to be taken to reduce the releases of radioactive materials in the affected effluents (i.e., liquid, radionoblegas gas, and/or radioiodines, particulates) within the specification and the proposed corrective actions to be taken to assure that subsequent releases will be in compliance with the above limits.
   3. If any of the limits of ODCM Specification 2.4.1 were exceeded, the report must include a statement that no drinking water source exists that could be affected or include the results of radiological impact on finished drinking water supplied with regard to the requirements of 40 CFR 141, Safe Drinking Water Act.

---

* One map shall cover stations near the site boundary; a second shall be the more distant stations.

b. Exceeding any of the limits prescribed by ODCM Specification 2.9.1, and/or 3.15.1. This report shall in clude the following information:

1. Identification of equipment or subsystem that rendered the affected radwaste system not operable.
2. The corrective action(s) taken to restore the affected radwaste treatment system to an operable status.
3. A summary description of the action(s) taken to prevent a similar recurrence.

c. Exceeding the reporting level for environmental sample media as specified in ODCM Specifications 4.1.3. This report sahll include the following information:

1. An evaluation of any environmental factor, release condition or other aspect which may have caused the reporting level to be exceeded.
2. A description of action(s) taken or planned to reduce the levels of licensed materials in the affected environmental media to below reporting level.

d. Exceeding the limits prescribed by ODCM Specification 6.1.1. This report shall be made in lieu of any other report and shall include the following:

1. The corrective action(s) to be taken to reduce subsequent releases to prevent recurrence of exceeding the limits prescribed by ODCM Specification 6.1.1.
2. An analysis which estimates the dose commitment to a member of the general public from uranium fuel cycle source including all effluent pathways and direct radiation for a 12 month period that includes releases covered by this report.
3. If the release conditions resulting in violation of 40 CFR 190 have not already been corrected, include a request for a variance in accordance with the provisions of 40 CFR 190 and include the specified information of 40 CFR 190.11(b).

8-2000

10.0 RADIOACTIVE EFFLUENT RELEASES - MONTHLY SUMMATION

A statement of the quantities of radioactive effluents released from the plant with data summarized on a monthly basis following the format of USNRC Regulatory Guide 1.21:

10.1 GASEOUS EFFLUENTS

1. Gross Radioactivity Releases

   a. Total gross radioactivity (in curies), primarily noble and activation gases.

   b. Maximum gross radioactivity release rate during any one-hour period.

   c. Total gross radioactivity (in curies) by nuclide released based on representative isotopic analyses performed.

   d. Percent of ODCM specification limit.

2. Iodine Releases

   a. Total iodine radioactivity (in curies) by nuclide released based on representative isotopic analyses performed.

   b. Percent of ODCM specification limit for I-131 released.

3. Particulate Releases

a. Total gross radioactivity (β,γ) released (in curies) excluding background radioactivity.

b. Gross alpha radioactivity released (in curies) excluding background radioactivity.

c. Total gross radioactivity (in curies) of nuclides with half-lives greater than eight days.

d. Percent of ODCM specification limit for particulate radioactivity with half-lives greater than eight days.

10.2 LIQUID EFFLUENTS

1. Total gross radioactivity (β,γ) released (in curies) excluding tritium and average concentration released to the unrestricted area.

2. The maximum concentration of gross radioactivity (β,γ) released to the unrestricted area (averaged over the period of release).

3. Total tritium and total alpha radioactivity (in curies) released and average concentration released to the unrestricted area.

4. Total dissolved gas radioactivity (in curies) and average concentration released to the unrestricted area.

5. Total volume (in liters) of liquid waste released.

6. Total volume (in liters) of dilution water used prior to release from the restricted area.

7. Total gross radioactivity (in curies) by nuclide released based on representative isotopic analyses performed.

8. Percent of ODCM specification limit for total radioactivity.

10.3 SOLID WASTE

1. The total amount of solid waste shipped (in cubic feet).

2. The total estimated radioactivity (in curies) involved.

3. Disposition including date and destination.

10.4 ENVIRONMENTAL MONITORING

1. For each medium sampled during the reporting period, e.g., air, baybottom, surface water, soil fish, include:

   a. Number of sampling locations,

   b. Total number of samples

   c. Number of locations at which levels are found to be significantly above local backgrounds, and

   d. Highest, lowest, and the average concentrations or levels of radiation for the sampling point with the highest average and description of the location of that point with respect to the site.

2. If levels of radioactive materials in environmental media as determined by an environmental monitoring program indicate the likelihood of public intakes in excess of 1% of those that could result from continuous exposure to the concentration value listed in Appendix B, Table 2, Part 20, estimates of the likely resultant exposure to individuals and to population groups, and assumptions upon which estimates are based shall be provided.

3. If statistically significant variation of offsite environmental concentrations with time are observed, correlation of these results with effluent release shall be provided.

APPENDIX A

METEOROLOGICAL DISPERSION FACTOR COMPUTATIONS

Carolina Power & Light Company (CP&L) engaged the services of Dames & Moore to assess the transport and dispersion of the effluent in the atmosphere as outlined in Preparation of Radiological Effluent Technical Specifications for Nuclear Power Plants, NUREG 0133 (USNRC 1978). The methodology for this assessment was based on guidelines presented in Regulatory Guide (RG) 1.111, Revision 1 (USNRC 1977). The results of the assessment were to provide the relative deposition flux and relative concentrations (undepleted and depleted) based on numerical models acceptable for use in Appendix I evaluations.

Regulatory Guide 1.111 presented three acceptable diffusion models for use in estimating deposition flux and concentrations. These were (1) particle-in-cell model (a variable trajectory model based on the gradient-transport theory), (2) puff-advection model (a variable trajectory model based on the statistical approach to diffusion), and (3) the constant mean wind direction model referred to here as the straight-line trajectory Gaussian diffusion model (the most widely used model based on a statistical approach). It was resolved that for operational efficiency, the straight-line described in XOQDOQ Program for the Meteorological Evaluation of Routine Effluent Releases at Nuclear Power Stations (Draft), NUREG 0324 (USNRC September 1977) would be used for generating the required analyses of Appendix I. To provide a more realistic accounting of the variability of wind around the plant site, terrain/recirculation correction factors (TCF) were to be determined from a combined puff-advection/straight-line scheme for a one-year meteorological data base.

Dames & Moore was provided a one-year record of meteorological data from the on-site meteorological program at the H. B. Robinson Steam Electric Plant. These data consisted of all collected parameters at both the 11.03-meter and 62.39-meter tower levels for the year 1977. Dames & Moore computed dispersions and depositions using the model described in the reference. The following tables from the reference provide the basis for the meteorological dilution factor development of the technical specifications for Appendix I and were the source of the X/Q and D/Q values used to show compliance with 10 CFR 20 and 10 CFR 50 for noble gases and radioiodines and particulates.

Tables A-1 through A-6	Relative undepleted concentration, relative depleted concentration, and relative deposition flux estimates for ground level releases for both standard distances and special locations for long-term releases.
Tables A-7 through A-9	Relative undepleted concentration, relative depleted concentration, and relative deposition flux estimates for ground level releases for special locations for short-term releases.

The X/Q and D/Q values which are used in Appendix B for showing compliance with 10 CFR 20 and 10 CFR 50 when the HBR Plant vent has been modified such that it qualifies as a mixed mode release were based upon the following tables:

Tables A-10 through A-15	Relative undepleted concentration, relative depleted concentration, and relative deposition flux estimates for elevated release for both standard distances and special locations for long-term releases.
Tables A-16 through A-18	Relative undepleted concentration, relative depleted concentration, and relative deposition flux estimates for mixed mode releases for special locations for short-term releases.

It should be noted that the short-term releases were based upon 100 hours per year of containment purges.

Future Operation Computations

The NRC "XOQDOQ" Program (Revision 1) was obtained and installed on the CP&L computer system. In general, Dames & Moore concluded that the straight-line model is as reasonable a projection of concentrations as the puff-advection model. By inclusion of the terrain correction factors developed by a combination of the puff-advection/straight-line scheme with the results of the XOQDOQ Program, ready evaluation of on-site meteorological data may be made.

For routine meteorological dispersion evaluations, the "XOQDOQ" Program will be run with the appropriate physical plant data, appropriate meteorological information for the standard distances, and special locations of interest without a terrain/recirculation factor. The resulting computations will have applied the TCFs to produce a final atmospheric diffusion estimate for the site. The input to "XOQDOQ" for ground level releases at HBR are presented in Table A-19 and for mixed mode releases at HBR in Table A-20.

Reference

Chandler, Martin W. and George Hoopes, Revised Radiological Effluent Technical Specifications. Gaseous Effluent Dilution Factors, Prepared for Carolina Power & Light Company, Robinson Facility, Dames & Moore, January 18, 1979.

TABLE A-1

X/Q Values for Long-Term Ground Level Releases at Special Locations (sec/m^3)*

Carolina Power & Light Company - Robinson
Release Type: Annual
Release Mode: Ground Level
Variable: Relative Concentration (Sec./Cubic Meter)
Calculation Points: Special
Model: Straight Line (ANNX0Q9)
Application of Terrain Correction Factors: Yes
Number of Observations: 8703

Affected Sector	Site Boundary	Meat	Dairy	Resident	Garden
NNE	6.67E-06	4.13E-06	0.00	6.26E-06	5.56E-06
NE	3.02E-06	2.56E-06	2.13E-06	2.44E-06	2.13E-06
ENE	4.41E-06	4.93E-07	0.00	4.18E-06	7.36E-07
E	6.39E-06	3.02E-07	1.44E-07	3.51E-06	3.68E-07
ESE	1.12E-05	1.18E-06	0.00	7.90E-06	7.90E-06
SE	3.28E-05	0.00	0.00	3.27E-05	3.27E-05
SSE	8.08E-05	0.00	0.00	6.01E-05	6.01E-05
S	3.29E-05	4.22E-07	0.00	2.78E-05	1.65E-05
SSW	2.10E-05	5.61E-07	0.00	2.04E-05	8.07E-06
SW	8.91E-06	2.61E-07	2.14E-07**	6.90E-06	5.38E-06
WSW	3.97E-06	1.16E-07	0.00	3.22E-06	1.83E-06
W	2.11E-06	3.89E-08	0.00	1.38E-06	1.38E-06
WNW	1.62E-06	5.32E-08	0.00	1.03E-06	6.06E-07
NW	7.93E-07	5.06E-07	0.00	7.39E-07	7.39E-07
NNW	1.31E-06	4.78E-07	0.00	4.42E-07	3.82E-07
N	1.45E-06	6.44E-07	0.00	6.67E-07	6.67E-07

* Zeroes indicate that this point was not calculated

** A milk goat is located here

TABLE A-2

Depleted X/Q Values for Long-Term Ground Level Releases at Special Locations (sec/m^3)*

Carolina Power & Light Company - Robinson
Release Type: Annual
Release Mode: Ground Level
Variable: Relative Depleted Concentration (Sec./Cubic Meter)
Calculation Points: Special
Model: Straight Line (ANNX0Q9)
Application of Terrain Correction Factors: Yes
Number of Observations: 8703

Affected Sector	Site Boundary	Meat	Dairy	Resident	Garden
NNE	5.84E-06	3.38E-06	0.00	5.25E-06	4.77E-06
NE	2.68E-06	2.21E-06	1.79E-06	2.09E-06	1.79E-06
ENE	3.95E-06	3.99E-07	0.00	3.72E-06	5.93E-07
E	5.79E-06	2.42E-07	1.08E-07	3.12E-06	2.86E-07
ESE	1.01E-05	9.72E-07	0.00	7.11E-06	7.11E-06
SE	3.08E-05	0.00	0.00	3.05E-05	3.05E-05
SSE	7.46E-05	0.00	0.00	5.61E-05	5.61E-05
S	3.11E-05	3.42E-07	0.00	2.61E-05	1.53E-05
SSW	1.91E-05	4.55E-07	0.00	1.96E-05	7.35E-06
SW	8.25E-06	2.14E-07	2.44E-07**	6.44E-06	4.88E-06
WSW	3.68E-06	8.92E-08	0.00	2.94E-06	1.68E-06
W	1.98E-06	2.96E-08	0.00	1.26E-06	1.26E-06
WNW	1.47E-06	4.07E-08	0.00	9.26E-07	5.42E-07
NW	6.71E-07	4.19E-07	0.00	6.31E-07	6.31E-07
NNW	1.09E-06	3.80E-07	0.00	3.48E-07	2.98E-07
N	1.24E-06	5.11E-07	0.00	5.24E-07	5.24E-07

* Zeroes indicate that this point was not calculated
** A milk goat is located here

TABLE A-3

D/Q Values for Long-Term Ground Level Releases at Special Locations (m^{-2})*

Carolina Power & Light Company - Robinson
Release Type: Annual
Release Mode: Ground Level
Variable: Relative Deposition Rate ($Meter^{-2}$)
Calculation Points: Special
Model: Straight Line (ANNX0Q9)
Application of Terrain Correction Factors: Yes
Number of Observations: 8703

Affected Sector	Site Boundary	Meat	Dairy	Resident	Garden
NNE	9.80E-09	5.63E-09	0.00	9.09E-09	7.74E-09
NE	5.59E-09	4.65E-09	3.70E-09	4.42E-09	3.70E-09
ENE	8.06E-09	6.96E-10	0.00	7.59E-09	1.05E-09
E	1.24E-08	4.13E-10	1.80E-10	6.43E-09	5.11E-10
ESE	1.71E-08	1.46E-09	0.00	1.20E-08	1.20E-08
SE	4.23E-08	0.00	0.00	4.14E-08	4.14E-08
SSE	8.08E-08	0.00	0.00	6.21E-08	6.21E-08
S	4.39E-08	4.77E-10	0.00	3.82E-08	2.33E-08
SSW	5.92E-08	1.38E-09	0.00	6.12E-08	2.33E-08
SW	2.80E-08	6.49E-10	5.17E-10**	2.15E-08	1.65E-08
WSW	1.91E-08	4.37E-10	0.00	1.54E-08	8.84E-09
W	8.84E-09	1.09E-10	0.00	5.75E-09	5.75E-09
WNW	8.10E-09	1.88E-10	0.00	5.08E-09	2.97E-09
NW	2.44E-09	1.45E-09	0.00	2.16E-09	2.16E-09
NNW	2.44E-09	7.45E-10	0.00	6.83E-10	5.73E-10
N	1.76E-09	6.44E-10	0.00	6.67E-10	6.67E-10

* Zeroes indicate that this point was not calculated
** A milk goat is located here

TABLE A-4

X/Q Values for Long-Term Ground Level Releases at Standard Distances (sec/m^3)

Carolina Power & Light Company - Robinson

Release Type: Annual

Release Mode: Ground Level

Variable: Relative Concentration (Sec./Cubic Meter)

Calculation Points: Standard

Model: Straight Line (ANNX0Q9)

Application of Terrain Correction Factors: Yes

Number of Observations: 8703

BASE DISTANCE IN MILES/KILOMETERS

Aftd Design Sect	Dist MI	.25 .40	.75 1.21	1.25 2.01	1.75 2.82	2.25 3.62	2.75 4.42	3.25 5.23	3.75 6.03	4.25 6.84	4.75 7.64
NNE	0.	8.8E-05	1.5E-05	6.4E-06	3.5E-06	2.3E-06	1.7E-06	1.1E-06	8.0E-07	5.5E-07	3.7E-07
NE	0.	3.9E-05	4.6E-06	2.0E-06	1.1E-06	6.9E-07	4.6E-07	3.5E-07	2.8E-07	2.2E-07	1.7E-07
ENE	0.	3.2E-05	5.2E-06	1.8E-06	9.7E-07	5.3E-07	3.8E-07	2.6E-07	2.1E-07	1.7E-07	1.5E-07
E	0.	2.9E-05	4.5E-06	1.6E-06	8.3E-07	6.2E-07	3.3E-07	2.7E-07	1.9E-07	1.3E-07	9.5E-08
ESE	0.	3.6E-05	5.4E-06	2.3E-06	1.3E-06	9.2E-07	6.2E-07	5.1E-07	3.6E-07	2.7E-07	1.9E-07
SE	0.	4.0E-05	5.4E-06	2.6E-06	1.3E-06	8.5E-07	4.8E-07	3.6E-07	2.1E-07	1.9E-07	1.6E-07
SSE	0.	8.2E-05	1.2E-05	5.0E-06	2.6E-06	1.5E-06	9.2E-07	6.5E-07	5.5E-07	4.5E-07	4.0E-07
S	0.	3.6E-05	4.4E-06	1.7E-06	9.1E-07	4.2E-07	3.3E-07	2.6E-07	2.1E-07	1.7E-07	1.4E-07
SSW	0.	2.5E-05	4.6E-06	1.9E-06	7.9E-07	4.5E-07	3.0E-07	2.1E-07	1.6E-07	1.2E-07	9.8E-08
SW	0.	1.5E-05	2.2E-06	8.3E-07	3.7E-07	2.3E-07	1.6E-07	1.2E-07	8.8E-08	7.1E-08	5.9E-08
WSW	0.	6.5E-06	1.0E-06	3.7E-07	2.0E-07	1.6E-07	1.0E-07	6.9E-08	5.8E-08	4.8E-08	3.7E-08
W	0.	6.5E-06	8.3E-07	3.2E-07	1.7E-07	1.3E-07	8.8E-08	6.7E-08	4.3E-08	3.0E-08	2.4E-08
WNW	0.	6.1E-06	7.8E-07	3.0E-07	1.8E-07	1.3E-07	9.6E-08	7.1E-08	5.4E-08	4.0E-08	3.0E-08
NW	0.	1.1E-05	1.6E-06	7.4E-07	4.2E-07	2.4E-07	1.3E-07	8.0E-08	6.7E-08	5.3E-08	4.4E-08
NNW	0.	2.0E-05	3.6E-06	1.9E-06	1.4E-06	9.4E-07	5.2E-07	2.7E-07	1.8E-07	1.2E-07	9.2E-08
N	0.	5.2E-05	8.0E-06	3.3E-06	1.6E-06	1.0E-06	7.1E-07	4.9E-07	3.7E-07	2.9E-07	2.4E-07

Number of Valid Observations	=	8703
Number of Invalid Observations	=	57
Number of Calms Lower Level	=	398
Number of Calms Upper Limit	=	0

TABLE A-5

Depleted X/Q Values for Long-Term Ground Level Releases at Standard Distances (sec/m^3)

Carolina Power & Light Company - Robinson

Release Type: Annual

Release Mode: Ground Level

Variable: Relative Concentration (Sec./Cubic Meter)

Calculation Points: Standard

Model: Straight Line (ANNX0Q9)

Application of Terrain Correction Factors: Yes

Number of Observations: 8703

BASE DISTANCE IN MILES/KILOMETERS

Aftd Sect	Design Dist MI	.25 .40	.75 1.21	1.25 2.01	1.75 2.82	2.25 3.62	2.75 4.42	3.25 5.23	3.75 6.03	4.25 6.84	4.75 7.64
NNE	0.	8.3E-05	1.3E-05	5.4E-06	3.0E-06	2.0E-06	1.3E-07	8.3E-06	6.2E-07	4.1E-07	2.7E-07
NE	0.	3.6E-05	4.1E-06	1.7E-06	9.2E-07	5.6E-07	3.6E-07	2.7E-07	2.1E-07	1.6E-07	1.3E-07
ENE	0.	3.1E-05	4.6E-06	1.5E-06	8.3E-07	4.3E-07	3.0E-07	2.0E-07	1.6E-07	1.3E-07	1.1E-07
E	0.	2.7E-05	4.1E-06	1.3E-06	6.9E-07	5.0E-07	2.7E-07	2.1E-07	1.4E-07	9.4E-08	7.2E-08
ESE	0.	3.4E-05	4.9E-06	2.0E-06	1.1E-06	7.4E-07	5.0E-07	4.0E-07	2.9E-07	2.1E-07	1.5E-07
SE	0.	3.8E-05	4.9E-06	2.2E-06	1.1E-06	7.0E-07	3.8E-07	2.8E-07	1.7E-07	1.4E-07	1.2E-07
SSE	0.	7.8E-05	1.1E-05	4.4E-06	2.2E-06	1.3E-06	7.6E-07	5.1E-07	4.3E-07	3.3E-07	2.9E-07
S	0.	3.5E-05	3.9E-06	1.4E-06	7.6E-07	3.5E-07	2.6E-07	2.0E-07	1.6E-07	1.3E-07	1.1E-07
SSW	0.	2.3E-05	4.1E-06	1.6E-06	6.6E-07	3.7E-07	2.4E-07	1.7E-07	1.2E-07	8.9E-08	6.9E-08
SW	0.	1.4E-05	1.9E-06	7.1E-07	3.1E-07	1.9E-07	1.2E-07	9.8E-08	6.7E-08	5.0E-08	4.3E-08
WSW	0.	6.2E-06	9.2E-07	3.2E-07	1.7E-07	1.3E-07	8.0E-08	5.4E-08	4.4E-08	3.6E-08	2.7E-08
W	0.	6.1E-06	7.5E-07	2.8E-07	1.4E-07	1.1E-07	6.8E-08	5.2E-08	3.3E-08	2.3E-08	1.8E-08
WNW	0.	5.8E-06	7.0E-07	2.6E-07	1.5E-07	1.1E-07	7.6E-08	5.5E-08	4.2E-08	3.0E-08	2.2E-08
NW	0.	1.1E-05	1.4E-06	6.4E-07	1.4E-07	2.0E-07	1.0E-07	6.1E-08	5.0E-08	4.0E-08	3.3E-08
NNW	0.	1.9E-05	3.1E-06	1.6E-06	1.1E-06	7.6E-07	4.2E-07	2.0E-07	1.3E-07	8.8E-08	7.1E-08
N	0.	4.9E-05	7.2E-06	2.8E-06	1.4E-06	8.1E-07	5.6E-07	3.8E-07	2.9E-07	2.2E-07	1.8E-07

Number of Valid Observations = 8703

Number of Invalid Observations = 57

Number of Calms Lower Level = 398

Number of Calms Upper Limit = 0

TABLE A-6

D/Q Values for Long-Term Ground Level Releases at Standard Distances (m^{-2})

Carolina Power & Light Company - Robinson

Release Type: Annual

Release Mode: Ground Level

Variable: Relative Concentration (Meter-^{2})

Calculation Points: Standard

Model: Straight Line (ANNX0Q9)

Application of Terrain Correction Factors: Yes

Number of Observations: 8703

BASE DISTANCE IN MILES/KILOMETERS

Aftd Sect	Design Dist MI	.25 / .40	.75 / 1.21	1.25 / 2.01	1.75 / 2.82	2.25 / 3.62	2.75 / 4.42	3.25 / 5.23	3.75 / 6.03	4.25 / 6.84	4.75 / 7.64
NNE	0.	1.3E-07	2.4E-08	9.3E-09	4.8E-09	3.0E-09	2.0E-09	1.2E-09	8.2E-10	5.4E-10	3.4E-10
NE	0.	7.1E-08	8.9E-09	3.4E-09	1.8E-09	1.0E-09	6.5E-10	4.6E-10	3.4E-10	2.6E-10	2.0E-10
ENE	0.	5.5E-08	9.6E-09	3.1E-09	1.5E-09	7.9E-10	5.1E-10	3.3E-10	2.6E-10	1.9E-10	1.6E-10
E	0.	5.1E-08	8.7E-09	2.7E-09	1.4E-09	9.4E-10	4.7E-10	3.6E-10	2.4E-10	1.5E-10	1.1E-10
ESE	0.	5.0E-08	8.2E-09	3.2E-09	1.6E-09	1.1E-09	6.9E-10	5.1E-10	3.6E-10	2.5E-10	1.8E-10
SE	0.	4.8E-08	7.0E-09	3.1E-09	1.5E-09	8.6E-10	4.5E-10	3.1E-10	1.8E-10	1.5E-10	1.2E-10
SSE	0.	8.2E-08	1.3E-08	5.2E-09	2.6E-09	1.4E-09	7.7E-10	4.9E-10	3.9E-10	3.0E-10	2.5E-10
S	0.	4.8E-08	6.3E-09	2.2E-09	1.2E-09	4.8E-10	3.5E-10	2.6E-10	1.9E-10	1.6E-10	1.2E-10
SSW	0.	7.2E-08	1.4E-08	5.1E-09	2.0E-09	1.1E-09	6.8E-10	4.5E-10	3.2E-10	2.3E-10	1.8E-10
SW	0.	4.2E-08	6.5E-09	2.3E-09	1.0E-09	5.7E-10	3.7E-10	2.7E-10	1.8E-10	1.4E-10	1.1E-10
WSW	0.	3.0E-08	4.9E-09	1.7E-09	8.5E-10	6.3E-10	3.8E-10	2.5E-10	1.9E-10	1.6E-10	1.2E-10
W	0.	2.7E-08	3.4E-09	1.2E-09	6.1E-10	4.4E-10	2.7E-10	2.0E-10	1.3E-10	8.5E-11	6.7E-11
WNW	0.	3.0E-08	3.9E-09	1.4E-09	7.4E-10	5.4E-10	3.7E-10	2.6E-10	2.0E-10	1.4E-10	1.0E-10
NW	0.	3.4E-08	5.2E-09	2.2E-09	1.2E-09	6.3E-10	3.2E-10	1.8E-10	1.5E-10	1.1E-10	9.0E-11
NNW	0.	4.1E-08	7.4E-09	3.6E-09	2.5E-09	1.6E-09	8.0E-10	3.9E-10	2.4E-10	1.5E-10	1.2E-10
N	0.	6.7E-08	1.1E-08	4.1E-09	2.0E-09	1.1E-09	7.2E-10	4.7E-10	3.3E-10	2.5E-10	2.0E-10

Number of Valid Observations	=	8703
Number of Invalid Observations	=	57
Number of Calms Lower Level	=	398
Number of Calms Upper Limit	=	0

TABLE A-7

X/Q Values for Short-Term Ground Level Releases at Special Locations (sec/m^3)*

Carolina Power & Light Company - Robinson

Release Type: Purge

Release Mode: Ground Level

Variable: Relative Concentration (Sec./Cubic Meter)

Calculation Points: Special

Model: Purge (ACNPURG2)

Application of Terrain Correction Factors: No

Number of Observations: 8703

Purge Time: 100 Hours

Affected Sector	Site Boundary	Meat	Dairy	Resident	Garden
NNE	7.20E-06	5.00E-06	0.00	6.80E-06	6.20E-06
NE	5.30E-06	4.60E-06	4.00E-06	4.40E-06	4.00E-06
ENE	6.90E-06	1.50E-06	0.00	6.70E-06	1.90E-06
E	1.00E-05	1.10E-06	6.40E-07	6.20E-06	1.20E-06
ESE	1.50E-05	2.60E-06	0.00	1.10E-05	1.10E-05
SE	3.40E-05	0.00	0.00	3.30E-05	3.30E-05
SSE	5.10E-05	0.00	0.00	4.10E-05	4.10E-05
S	3.00E-05	1.20E-06	0.00	2.60E-05	1.80E-05
SSW	2.10E-05	1.30E-06	0.00	2.00E-05	9.80E-06
SW	1.10E-05	7.80E-07	6.70E-07**	9.10E-06	7.20E-06
WSW	8.10E-06	5.50E-07	0.00	6.90E-06	4.20E-06
W	5.50E-06	3.00E-07	0.00	4.20E-06	4.20E-06
WNW	5.30E-06	3.90E-07	0.00	3.70E-06	2.50E-06
NW	2.30E-06	1.70E-06	0.00	2.20E-06	2.20E-06
NNW	2.40E-06	1.20E-06	0.00	1.20E-06	1.10E-06
N	2.70E-06	1.50E-06	0.00	1.50E-06	1.50E-06

* Zeroes indicate that this point was not calculated

** A milk goat is located here

TABLE A-8

Depleted X/Q Values for Short-Term Ground Level Releases at Special Locations (sec/m^3)*

Carolina Power & Light Company - Robinson

Release Type: Purge

Release Mode: Ground Level

Variable: Relative Depleted Concentration (Sec./Cubic Meter)

Calculation Points: Special

Model: Purge (ACNPURG2)

Application of Terrain Correction Factors: No

Number of Observations: 8703

Purge Time: 100 Hours

Affected Sector	Site Boundary	Meat	Dairy	Resident	Garden
NNE	6.30E-06	4.09E-06	0.00	5.71E-06	5.31E-06
NE	4.71E-06	3.97E-06	3.37E-06	3.77E-06	3.37E-06
ENE	6.19E-06	1.21E-06	0.00	5.96E-06	1.53E-06
E	9.06E-06	8.80E-07	4.80E-07	5.51E-06	9.34E-07
ESE	1.36E-05	2.14E-06	0.00	9.90E-06	9.90E-06
SE	3.19E-05	0.00	0.00	3.08E-05	3.08E-05
SSE	4.71E-05	0.00	0.00	3.83E-05	3.83E-05
S	2.83E-05	9.74E-07	0.00	2.44E-05	1.67E-05
SSW	1.91E-05	1.05E-06	0.00	1.92E-05	8.93E-06
SW	1.02E-05	6.38E-07	7.64E-07**	8.49E-06	6.52E-06
WSW	7.50E-06	4.23E-07	0.00	6.30E-06	3.85E-06
W	5.16E-06	2.28E-07	0.00	3.85E-06	3.85E-06
WNW	4.82E-06	2.98E-07	0.00	3.33E-06	2.23E-06
NW	1.95E-06	1.41E-06	0.00	1.88E-06	1.88E-06
NNW	1.99E-06	9,53E-07	0.00	9.46E-07	8.59E-07
N	2.31E-06	1.19E-06	0.00	1.18E-06	1.18E-06

* Zeroes indicate that this point was not calculated

** A milk goat is located here

TABLE A-9

D/Q Values for Short-Term Ground Level Releases at Special Locations (m^{-2})*

Carolina Power & Light Company - Robinson

Release Type: Purge

Release Mode: Ground Level

Variable: Relative Deposition Rate ($Meter^{-2}$)

Calculation Points: Special

Model: Purge (ACNPURG2)

Application of Terrain Correction Factors: No

Number of Observations: 8703

Purge Time: 100 Hours

Affected Sector	Site Boundary	Meat	Dairy	Resident	Garden
NNE	1.06E-08	6.80E-09	0.00	9.86E-09	8.62E-09
NE	9.80E-09	8.37E-09	6.96E-09	7.96E-09	6.96E-09
ENE	1.26E-08	2.12E-09	0.00	1.21E-08	2.72E-09
E	1.94E-08	1.51E-09	8.00E-10	1.13E-08	1.67E-09
ESE	2.29E-08	3.22E-09	0.00	1.68E-08	1.68E-08
SE	4.25E-08	0.00	0.00	4.19E-08	4.19E-08
SSE	5.10E-08	0.00	0.00	4.22E-08	4.22E-08
S	3.99E-08	1.36E-09	0.00	3.59E-08	2.54E-08
SSW	5.92E-08	3.18E-09	0.00	6.00E-08	2.83E-08
SW	3.46E-08	1.93E-09	1.61E-09**	2.83E-08	2.20E-08
WSW	3.90E-08	2.07E-09	0.00	3.30E-08	2.03E-08
W	2.30E-08	8.40E-10	0.00	1.75E-08	1.75E-08
WNW	2.65E-08	1.38E-09	0.00	1.82E-08	1.22E-08
NW	7.08E-09	4.86E-09	0.00	6.42E-09	6.42E-09
NNW	4.46E-09	1.87E-09	0.00	1.86E-09	1.65E-09
N	3.27E-09	1.50E-09	0.00	1.50E-09	1.50E-09

* Zeroes indicate that this point was not calculated

** A milk goat is located here

TABLE A-10

X/Q Values for Long-Term Mixed Mode Releases at Special Locations (sec/m^3)*

Carolina Power & Light Company - Robinson

Release Type: Annual

Release Mode: Mixed Mode

Variable: Relative Concentration (Sec./Cubic Meter)

Calculation Points: Special

Model: Straight Line (ANNX0Q9)

Application of Terrain Correction Factors: Yes

Number of Observations: 8703

Affected Sector	Site Boundary	Meat	Dairy	Resident	Garden
NNE	3.33E-07	2.82E-07	0.00	3.23E-07	3.18E-07
NE	1.34E-07	1.40E-07	1.23E-07	1.39E-07	1.23E-07
ENE	2.74E-07	1.23E-07	0.00	2.79E-07	8.51E-08
E	2.40E-07	1.11E-07	5.39E-08	2.53E-07	1.33E-07
ESE	2.75E-07	1.25E-07	0.00	2.17E-07	2.17E-07
SE	5.13E-07	0.00	0.00	5.23E-07	5.23E-07
SSE	9.94E-07	0.00	0.00	7.61E-07	7.61E-07
S	4.57E-07	3.61E-08	0.00	4.00E-07	2.50E-07
SSW	5.54E-07	1.27E-07	0.00	5.71E-07	2.69E-07
SW	2.31E-07	5.38E-08	4.72E-08**	1.84E-07	1.51E-07
WSW	2.06E-07	4.64E-08	0.00	1.68E-07	1.02E-07
W	9.36E-08	1.87E-08	0.00	7.13E-08	7.13E-08
WNW	1.02E-07	4.28E-08	0.00	9.55E-08	9.80E-08
NW	1.52E-07	1.30E-07	0.00	1.54E-07	1.54E-07
NNW	1.71E-07	8.86E-08	0.00	8.30E-08	7.28E-08
N	9.32E-08	5.66E-08	0.00	5.80E-08	5.80E-08

* Zeroes indicate that this point was not calculated
** A milk goat is located here

TABLE A-11

Depleted X/Q Values for Long-Term Mixed Mode Releases at Special Locations (sec/m³)*

Carolina Power & Light Company - Robinson

Release Type: Annual

Release Mode: Mixed Mode

Variable: Relative Concentration (Sec./Cubic Meter)

Calculation Points: Special

Model: Straight Line (ANNX0Q9)

Application of Terrain Correction Factors: Yes

Number of Observations: 8703

Affected Sector	Site Boundary	Meat	Dairy	Resident	Garden
NNE	3.33E-07	2.82E-07	0.00	3.23E-07	2.98E-07
NE	1.23E-07	1.28E-07	1.23E-07	1.28E-07	1.23E-07
ENE	2.59E-07	1.23E-07	0.00	2.63E-07	8.12E-08
E	2.40E-07	1.11E-07	4.39E-08	2.53E-07	1.23E-07
ESE	2.54E-07	1.18E-07	0.00	1.96E-07	1.96E-07
SE	4.93E-07	0.00	0.00	5.02E-07	5.02E-07
SSE	9.32E-07	0.00	0.00	7.21E-07	7.21E-07
S	4.39E-07	3.42E-08	0.00	3.82E-07	2.33E-07
SSW	5.35E-07	1.27E-07	0.00	5.51E-07	2.51E-07
SW	2.31E-07	5.14E-08	5.31E-08**	1.84E-07	1.45E-07
WSW	2.06E-07	4.46E-08	0.00	1.68E-07	9.91E-08
W	9.10E-08	1.82E-08	0.00	6.90E-08	6.90E-08
WNW	9.88E-08	4.07E-08	0.00	9.26E-08	9.54E-08
NW	1.51E-07	1.27E-07	0.00	1.54E-07	1.54E-07
NNW	1.64E-07	8.44E-08	0.00	8.04E-08	6.92E-08
N	8.91E-08	5.42E-08	0.00	5.56E-08	5.56E-08

* Zeroes indicate that this point was not calculated

** A milk goat is located here

TABLE A-12

D/Q Values for Long-Term Mixed Mode Releases at Special Locations (m^{-2})*

Carolina Power & Light Company - Robinson

Release Type: Annual

Release Mode: Mixed Mode

Variable: Relative Deposition Rate ($Meter^{-2}$)

Calculation Points: Special

Model: Straight Line (ANNX0Q9)

Application of Terrain Correction Factors: Yes

Number of Observations: 8703

Affected Sector	Site Boundary	Meat	Dairy	Resident	Garden
NNE	2.29E-09	1.39E-09	0.00	2.22E-09	1.89E-09
NE	1.79E-09	1.51E-09	1.23E-09	1.39E-09	1.23E-09
ENE	3.19E-09	3.41E-10	0.00	3.10E-09	4.78E-10
E	4.99E-09	2.31E-10	1.15E-10	2.92E-09	2.76E-10
ESE	4.86E-09	5.90E-10	0.00	3.75E-09	3.75E-09
SE	6.98E-09	0.00	0.00	7.20E-09	7.20E-09
SSE	6.22E-09	0.00	0.00	5.21E-09	5.21E-09
S	7.31E-09	1.77E-10	0.00	6.60E-09	5.17E-09
SSW	1.01E-08	7.41E-10	0.00	1.06E-08	6.81E-09
SW	4.62E-09	3.32E-10	2.66E-10**	4.14E-09	3.87E-09
WSW	4.85E-09	2.59E-10	0.00	4.34E-09	3.35E-09
W	2.64E-09	6.74E-11	0.00	1.95E-09	1.95E-09
WNW	2.59E-09	1.25E-10	0.00	1.94E-09	1.29E-09
NW	1.20E-09	7.66E-10	0.00	1.12E-09	1.12E-09
NNW	7.77E-10	2.53E-10	0.00	2.41E-10	2.03E-10
N	3.62E-10	1.41E-10	0.00	1.51E-10	1.51E-10

* Zeroes indicate that this point was not calculated

** A milk goat is located here

TABLE A-13

X/Q Values for Long-Term Mixed Mode Releases at Standard Distances (sec/m³)

Carolina Power & Light Company - Robinson

Release Type: Annual

Release Mode: Mixed Mode

Variable: Relative Concentration (Sec./Cubic Meter)

Calculation Points: Standard

Model: Straight Line (ANNX0Q9)

Application of Terrain Correction Factors: Yes

Number of Observations: 8703

BASE DISTANCE IN MILES/KILOMETERS

Aftd Design Sect	Dist MI	.25 .40	.75 1.21	1.25 2.01	1.75 2.82	2.25 3.62	2.75 4.42	3.25 5.23	3.75 6.03	4.25 6.84	4.75 7.64
NNE	0.	1.5E-06	3.9E-07	3.1E-07	2.7E-07	2.3E-07	2.0E-07	1.6E-07	1.4E-07	9.8E-08	6.5E-08
NE	0.	1.0E-06	1.5E-07	1.1E-07	9.0E-08	6.7E-08	5.2E-08	7.8E-08	3.8E-08	5.4E-08	3.4E-08
ENE	0.	8.6E-07	2.6E-07	1.9E-07	1.7E-07	1.2E-07	1.1E-07	7.4E-08	6.2E-08	4.8E-08	4.2E-08
E	0.	7.2E-07	2.6E-07	2.2E-07	2.0E-07	2.1E-07	1.2E-07	9.4E-08	7.0E-08	4.7E-08	3.6E-08
ESE	0.	7.8E-07	1.9E-07	1.7E-07	1.3E-07	1.0E-07	7.6E-08	6.6E-08	4.9E-08	3.8E-08	2.9E-08
SE	0.	5.9E-07	1.0E-07	7.5E-08	5.1E-08	3.8E-08	2.4E-08	1.9E-08	1.2E-08	1.2E-08	1.1E-08
SSE	0.	1.0E-06	1.8E-07	1.2E-07	8.0E-08	5.4E-08	3.6E-08	2.6E-08	2.3E-08	1.9E-08	1.8E-08
S	0.	5.0E-07	9.4E-08	7.0E-08	5.9E-08	3.5E-08	3.2E-08	2.9E-08	2.5E-08	2.2E-08	1.9E-08
SSW	0.	6.3E-07	2.7E-07	2.4E-07	1.5E-07	1.2E-07	8.4E-08	6.3E-08	4.7E-08	3.6E-08	3.1E-08
SW	0.	3.5E-07	9.9E-08	8.8E-08	6.1E-08	4.6E-08	3.7E-08	3.2E-08	2.3E-08	2.0E-08	1.7E-08
WSW	0.	3.0E-07	6.5E-08	6.2E-08	5.4E-08	5.4E-08	4.1E-08	3.0E-08	2.7E-08	2.4E-08	1.9E-08
W	0.	2.4E-07	6.2E-08	6.0E-08	4.9E-08	4.9E-08	3.5E-08	3.0E-08	2.0E-08	1.5E-08	1.2E-08
WNW	0.	2.8E-07	8.4E-08	8.6E-08	6.8E-08	6.3E-08	5.2E-08	4.2E-08	3.6E-08	3.6E-08	3.4E-08
NW	0.	3.8E-07	1.2E-07	1.5E-07	1.2E-07	9.2E-08	6.5E-08	4.7E-08	4.1E-08	3.5E-08	2.9E-08
NNW	0.	4.2E-07	1.8E-07	1.4E-07	1.6E-07	1.4E-07	9.2E-08	5.4E-08	3.7E-08	2.5E-08	2.1E-08
N	0.	7.8E-07	1.7E-07	1.3E-07	9.3E-08	7.2E-08	5.9E-08	4.5E-08	3.8E-08	3.3E-08	2.9E-08

Number of Valid Observations	=	8703
Number of Invalid Observations	=	57
Number of Calms Lower Level	=	60
Number of Calms Upper Limit	=	5

TABLE A-14

Depleted X/Q Values for Long-Term Mixed Mode Releases at Standard Distances (sec/m³)

Carolina Power & Light Company - Robinson

Release Type: Annual

Release Mode: Mixed Mode

Variable: Relative Depleted Concentration (Sec./Cubic Meter)

Calculation Points: Standard

Model: Straight Line (ANNX0Q9)

Application of Terrain Correction Factors: Yes

Number of Observations: 8703

BASE DISTANCE IN MILES/KILOMETERS

Aftd Sect	Design Dist MI	.25 .40	.75 1.21	1.25 2.01	1.75 2.82	2.25 3.62	2.75 4.42	3.25 5.23	3.75 6.03	4.25 6.84	4.75 7.64
NNE	0.	1.5E-06	3.7E-07	3.1E-07	2.5E-07	2.2E-07	1.8E-07	1.5E-07	1.3E-07	8.9E-08	6.1E-08
NE	0.	9.8E-07	1.4E-07	1.1E-07	8.5E-08	6.4E-08	4.9E-08	7.8E-08	3.6E-08	5.2E-08	3.1E-08
ENE	0.	8.3E-07	2.5E-07	1.8E-07	1.6E-07	1.2E-07	1.0E-07	6.9E-08	5.7E-08	4.5E-08	4.0E-08
E	0.	7.0E-07	2.4E-07	2.0E-07	1.9E-07	2.1E-07	1.1E-07	9.4E-08	6.6E-08	4.5E-08	3.4E-08
ESE	0.	7.3E-07	1.8E-07	1.6E-07	1.2E-07	9.6E-08	7.2E-08	6.1E-08	4.6E-08	3.6E-08	2.7E-08
SE	0.	5.7E-07	9.6E-08	6.9E-08	4.7E-08	3.6E-08	2.3E-08	1.8E-08	1.2E-08	1.0E-08	9.9E-09
SSE	0.	9.6E-07	1.7E-07	1.1E-07	7.4E-08	4.9E-08	3.3E-08	2.4E-08	2.1E-08	1.7E-08	1.6E-08
S	0.	4.8E-07	8.9E-08	6.7E-08	5.8E-08	3.8E-08	3.1E-08	2.7E-08	2.4E-08	2.1E-08	1.8E-08
SSW	0.	6.1E-07	2.5E-07	2.4E-07	1.5E-07	1.1E-07	8.0E-08	6.0E-08	4.5E-08	3.4E-08	2.9E-08
SW	0.	3.4E-07	9.5E-08	8.5E-08	5.8E-08	4.4E-08	3.6E-08	3.1E-08	2.2E-08	1.9E-08	1.6E-08
WSW	0.	2.9E-07	6.3E-08	6.1E-08	5.2E-08	5.2E-08	4.0E-08	2.9E-08	2.6E-08	2.2E-08	1.8E-08
W	0.	2.4E-07	6.0E-08	5.9E-08	4.8E-08	4.7E-08	3.4E-08	2.9E-08	1.9E-08	1.4E-08	1.2E-08
WNW	0.	2.6E-07	8.3E-08	8.4E-08	6.6E-08	6.2E-08	5.0E-08	4.0E-08	3.4E-08	3.4E-08	3.2E-08
NW	0.	3.8E-07	1.1E-07	1.5E-07	1.1E-07	9.0E-08	6.3E-08	4.5E-08	3.9E-08	3.0E-08	2.4E-08
NNW	0.	4.1E-07	1.2E-07	1.4E-07	1.6E-07	1.4E-07	8.8E-08	5.2E-08	3.5E-08	2.4E-08	2.0E-08
N	0.	7.5E-07	1.5E-07	1.2E-07	8.8E-08	6.9E-08	5.7E-08	4.3E-08	3.6E-08	3.1E-08	2.7E-08

Number of Valid Observations	=	8703
Number of Invalid Observations	=	57
Number of Calms Lower Level	=	60
Number of Calms Upper Limit	=	5

TABLE A-15

D/Q Values for Long-Term Mixed Mode Releases at Standard Distances (m^{-2})

Carolina Power & Light Company - Robinson

Release Type: Annual

Release Mode: Mixed Mode

Variable: Relative Deposition Rate ($Meter^{-2}$)

Calculation Points: Standard

Model: Straight Line (ANNX0Q9)

Application of Terrain Correction Factors: Yes

Number of Observations: 8703

BASE DISTANCE IN MILES/KILOMETERS

Aftd Sect	Design Dist MI	.25 .40	.75 1.21	1.25 2.01	1.75 2.82	2.25 3.62	2.75 4.42	3.25 5.23	3.75 6.03	4.25 6.84	4.75 7.64
NNE	0.	1.6E-08	5.0E-09	2.1E-09	1.2E-09	7.5E-10	5.2E-10	3.4E-10	2.7E-10	2.0E-10	1.4E-10
NE	0.	1.1E-08	2.6E-09	1.2E-09	6.2E-10	3.5E-10	2.3E-10	1.8E-10	1.2E-10	1.2E-10	1.0E-10
ENE	0.	1.1E-08	3.8E-09	1.4E-09	7.6E-10	3.7E-10	2.7E-10	1.8E-10	1.4E-10	1.2E-10	1.1E-10
E	0.	1.1E-08	3.7E-09	1.4E-09	7.2E-10	5.0E-10	2.6E-10	2.1E-10	1.4E-10	1.0E-10	7.8E-11
ESE	0.	8.6E-09	2.7E-09	1.2E-09	6.7E-10	4.3E-10	2.8E-10	2.1E-10	1.5E-10	1.0E-10	7.3E-11
SE	0.	7.0E-09	1.9E-09	9.5E-10	4.7E-10	2.8E-10	1.5E-10	1.1E-10	5.9E-11	5.0E-11	4.2E-11
SSE	0.	6.2E-09	1.8E-09	8.6E-10	4.6E-10	2.6E-10	1.5E-10	9.5E-11	7.7E-11	5.9E-11	5.0E-11
S	0.	7.1E-09	1.8E-09	7.6E-10	4.2E-10	1.8E-10	1.3E-10	9.9E-11	7.3E-11	6.1E-11	4.8E-11
SSW	0.	1.0E-08	5.0E-09	2.6E-09	1.1E-09	6.1E-10	3.9E-10	2.6E-10	1.8E-10	1.3E-10	1.0E-10
SW	0.	5.0E-09	2.0E-09	9.8E-10	4.7E-10	2.9E-10	1.9E-10	1.5E-10	9.8E-11	7.6E-11	6.4E-11
WSW	0.	4.9E-09	1.9E-09	8.4E-10	4.8E-10	3.7E-10	2.3E-10	1.5E-10	1.2E-10	1.0E-10	7.1E-11
W	0.	4.0E-09	1.4E-09	6.3E-10	3.4E-10	2.6E-10	1.6E-10	1.3E-10	7.9E-11	5.4E-11	4.1E-11
WNW	0.	4.6E-09	1.5E-09	7.1E-10	4.2E-10	3.2E-10	2.2E-10	1.6E-10	1.2E-10	9.9E-11	7.4E-11
NW	0.	5.6E-09	2.2E-09	1.1E-09	6.4E-10	3.6E-10	1.9E-10	1.2E-10	1.0E-10	1.1E-10	9.6E-11
NNW	0.	4.5E-09	1.9E-09	1.1E-09	8.1E-10	5.2E-10	2.7E-10	1.4E-10	8.8E-11	5.7E-11	4.5E-11
N	0.	5.9E-09	1.8E-09	8.2E-10	4.0E-10	2.4E-10	1.6E-10	1.0E-10	7.4E-11	5.8E-11	4.7E-11

Number of Valid Observations	=	8703
Number of Invalid Observations	=	57
Number of Calms Lower Level	=	60
Number of Calms Upper Limit	=	5

TABLE A-16

X/Q Values for Short-Term Mixed Mode Releases at Special Locations (sec/m³)*

Carolina Power & Light Company - Robinson

Release Type: Purge

Release Mode: Mixed Mode

Variable: Relative Concentration (Sec./Cubic Meter)

Calculation Points: Special

Model: Purge (ACNPURG2)

Application of Terrain Correction Factors: No

Number of Observations: 8703

Purge Time: 100 Hours

Affected Sector	Site Boundary	Meat	Dairy	Resident	Garden
NNE	8.40E-07	7.00E-07	0.00	8.30E-07	7.90E-07
NE	5.40E-07	5.30E-07	4.70E-07	5.20E-07	4.70E-07
ENE	8.90E-07	4.20E-07	0.00	8.80E-07	3.10E-07
E	1.00E-06	4.00E-07	2.50E-07	9.20E-07	4.50E-07
ESE	1.24E-06	4.70E-07	0.00	1.00E-06	1.00E-06
SE	2.20E-06	0.00	0.00	2.10E-06	2.10E-06
SSE	2.90E-06	0.00	0.00	2.40E-06	2.40E-06
S	1.90E-06	2.00E-07	0.00	1.70E-06	1.20E-06
SSW	2.00E-06	4.00E-07	0.00	2.00E-06	1.10E-06
SW	1.10E-06	2.40E-07	2.10E-07**	9.50E-07	7.70E-07
WSW	1.20E-06	2.20E-07	0.00	9.90E-07	6.30E-07
W	7.40E-07	1.30E-07	0.00	5.90E-07	5.90E-07
WNW	7.90E-07	2.20E-07	0.00	6.80E-07	6.20E-07
NW	6.30E-07	5.10E-07	0.00	6.20E-07	6.20E-07
NNW	5.10E-07	3.20E-07	0.00	3.10E-07	2.90E-07
N	3.50E-07	2.30E-07	0.00	2.40E-07	2.40E-07

* Zeroes indicate that this point was not calculated

** A milk goat is located here

TABLE A-17

Depleted X/Q Values for Short-Term Mixed Mode Releases at Special Locations (sec/m^3)*

Carolina Power & Light Company - Robinson

Release Type: Purge

Release Mode: Mixed Mode

Variable: Relative Depleted Concentration (Sec./Cubic Meter)

Calculation Points: Special

Model: Purge (ACNPURG2)

Application of Terrain Correction Factors: No

Number of Observations: 8703

Purge Time: 100 Hours

Affected Sector	Site Boundary	Meat	Dairy	Resident	Garden
NNE	8.40E-07	7.00E-07	0.00	8.30E-07	7.41E-07
NE	4.95E-07	4.86E-07	4.70E-07	4.77E-07	4.70E-07
ENE	8.40E-07	4.20E-07	0.00	8.31E-07	2.96E-07
E	1.00E-06	4.00E-07	2.03E-07	9.20E-07	4.15E-07
ESE	1.11E-06	4.44E-07	0.00	9.00E-07	9.00E-07
SE	2.11E-06	0.00	0.00	2.01E-06	2.01E-06
SSE	2.72E-07	0.00	0.00	2.27E-06	2.27E-06
S	1.82E-06	1.90E-07	0.00	1.63E-06	1.12E-06
SSW	1.93E-06	4.00E-07	0.00	1.93E-06	1.03E-06
SW	1.10E-06	2.29E-07	2.35E-07**	9.50E-07	7.36E-07
WSW	1.20E-06	2.12E-07	0.00	9.90E-07	6.11E-07
W	7.19E-07	1.26E-07	0.00	5.71E-07	5.71E-07
WNW	7.65E-07	2.09E-07	0.00	6.59E-07	6.04E-07
NW	6.24E-07	4.99E-07	0.00	6.20E-07	6.20E-07
NNW	4.90E-07	3.05E-07	0.00	3.00E-07	2.76E-07
N	3.35E-07	2.20E-07	0.00	2.30E-07	2.30E-07

* Zeroes indicate that this point was not calculated

** A milk goat is located here

TABLE A-18

D/Q Values for Short-Term Mixed Mode Releases at Special Locations (m^{-2})*

Carolina Power & Light Company - Robinson

Release Type: Purge

Release Mode: Mixed Mode

Variable: Relative Deposition Rate ($Meter^{-2}$)

Calculation Points: Special

Model: Purge (ACNPURG2)

Application of Terrain Correction Factors: No

Number of Observations: 8703

Purge Time: 100 Hours

Affected Sector	Site Boundary	Meat	Dairy	Resident	Garden
NNE	5.77E-09	3.45E-09	0.00	5.70E-09	4.68E-09
NE	7.18E-09	5.72E-09	4.70E-09	5.20E-09	4.70E-09
ENE	1.04E-08	1.16E-09	0.00	9.77E-09	1.74E-09
E	2.08E-08	8.36E-10	5.32E-10	1.06E-08	9.36E-10
ESE	2.12E-08	2.22E-09	0.00	1.73E-08	1.73E-08
SE	2.99E-08	0.00	0.00	2.88E-08	2.88E-08
SSE	1.81E-08	0.00	0.00	1.64E-08	1.64E-08
S	3.04E-08	9.84E-10	0.00	2.80E-08	2.48E-08
SSW	3.66E-08	2.33E-09	0.00	3.72E-08	2.78E-08
SW	2.20E-08	1.48E-09	1.18E-09**	2.14E-08	1.97E-08
WSW	2.83E-08	1.23E-09	0.00	2.55E-08	2.07E-08
W	2.09E-08	4.69E-10	0.00	1.62E-08	1.62E-08
WNW	2.01E-08	6.45E-10	0.00	1.38E-08	8.18E-09
NW	4.98E-09	3.00E-09	0.00	4.53E-09	4.53E-09
NNW	2.32E-09	9.15E-10	0.00	8.99E-10	8.09E-10
N	1.36E-09	5.75E-10	0.00	6.24E-10	6.24E-10

* Zeroes indicate that this point was not calculated

** A milk goat is located here

TABLE A-19

Robinson Plant Site Information To Be Used for Ground Level Calculations with NRC "XOQDOQ" Program

CARD TYPE	COLUMNS	DESCRIPTION	VALUE TO BE USED IN XOQDOQ
1	1	Print input data	1
	38	Calculate annual X/Qs for points of interest	1
	39	Calculate annual X/Q averages for site radial segments	1
	41	Print out set distance X/Qs and D/Qs	1
	55	Calculate annual D/Q averages for the set radial segments	1
	56	Allow depleted X/Qs (if Decays (1), (2), or (3) are negative)	1
	58	Calculate annual D/Qs for points of interest	1
2	1-80	Title card	N/A
3	1-5	Number of wind velocity categories	7
	6-10	Number of stability categories	7
	11-15	Number of distances within terrain data for each sector	5
	16-20	Total number of hours in joint wind frequency distribution	(1)
	21-25	Increment in % for which plotted results are to be printed	5
	26-30	Number of titles of receptor types	5
	31-35	Number or release exit locations	3
4	1-5	Height of the measured wind (meters)	11
	6-20	Half-life (days) used in the X/Q calculations	101.00 226 -8.00
5	N/A	N/A	---
6	1-80	Joint wind frequency distribution	(1)

TABLE A-19 (Continued)

CARD TYPE	COLUMNS	DESCRIPTION	VALUE TO BE USED IN XOQDOQ
7	1-5 6-75	Wind velocity units correction Maximum wind speed in each wind class (m/sec)	200.00 0.75 3.50 7.50 12.50 18.50 25.00 26.00
8	1-80	Distance in meters at which terrain heights are given	(2)
9	1-80	Terrain heights (in meters, above plant grade) correspond to distance in Card Type 8	(2)
10	1-25	Number of receptor locations for a particular receptor type	Site boundary = 16 Dairy = 1 Meat = 14 Residence = 16 Garden = 16
11	1-16	Title of receptor type for receptor locations	Site Boundary Dairy Meat Residence Garden
12	1-80	Receptor direction and distance	(See Table 1)
13	1-80	Title for release point whose characteristics are described on Card Type 14	(1)

TABLE A-19 (Continued)

CARD TYPE	COLUMNS	DESCRIPTION	VALUE TO BE USED IN XOQDOQ
14	1-5	Vent average velocity (m/sec)	20.1
	6-10	Vent inside diameter (m)	1.0
	11-15	Height of vent release point (m)	0.000
	16-20	Height of the vent's building (m)	59.0
	21-25	Minimum cross-sectional area for the vent's building (m^2)	1370.0
	26-30	Wind height used for vent elevated release	11.0
	31-35	Vent heat emission rate (cal/sec)	0.0
15	1	Identification for release point	A
	2-5	Intermittent releases	1
	6-10	Number of intermittent releases per year for this release point	100
	11-15	Average number of hours per intermittent release	1

(1) Appropriate data to be supplied

(2) Obtained from cross-sectional topographic maps

TABLE A-20

Robinson Plant Site Information To Be Used for Mixed Mode Release Calculations with NRC "XOQDOQ" Program

CARD TYPE	COLUMNS	DESCRIPTION	VALUE TO BE USED IN XOQDOQ
1	1	Print input data	1
	38	Calculate annual X/Qs for points of interest	1
	39	Calculate annual X/Q averages for site radial segments	1
	41	Print out set distance X/Qs and D/Qs	1
	55	Calculate annual D/Q averages for the set radial segments	1
	56	Allow depleted X/Qs (if Decays (1), (2), or (3) are negative)	1
	58	Calculate annual D/Qs for points of interest	1
2	1-80	Title card	N/A
3	1-5	Number of wind velocity categories	7
	6-10	Number of stability categories	7
	11-15	Number of distances within terrain data for each sector	5
	16-20	Total number of hours in joint wind frequency distribution	(1)
	21-25	Increment in % for which plotted results are to be printed	5
	26-30	Number of titles of receptor types	5
	31-35	Number of release exit locations	3
4	1-5	Height of the measured wind (meters)	11
	6-20	Half-life (days) used in the X/Q calculations	101.00 226 -8.00
5	N/A	N/A	---
6	1-80	Joint wind frequency distribution	(1)

TABLE A-20 (continued)

CARD TYPE	COLUMNS	DESCRIPTION	VALUE TO BE USED IN XOQDOQ
7	1-5 6-75	Wind velocity units correction Maximum wind speed in each wind class (m/sec)	200.00 0.75 3.50 7.50 12.50 18.50 25.00 26.00
8	1-80	Distance in meters at which terrain heights are given	(2)
9	1-80	Terrain heights (in meters, above plant grade) corresponding to distances in Card Type 8	(2)
10	1-25	Number of receptor locations for a particular receptor type	Site boundary = 16 Dairy = 1 Meat = 14 Residence = 16 Garden = 16
11	1-16	Title of receptor type for receptor locations	Site Boundary Dairy Meat Residence Garden
12	1-80	Receptor direction and distance	(See Table 1)
13	1-80	Title for release point whose characteristics are described on Card Type 14	(1)

TABLE A-20 (continued)

CARD TYPE	COLUMNS	DESCRIPTION	VALUE TO BE USED IN XOQDOQ
14	1-5	Vent average velocity (m/sec)	20.1
	6-10	Vent inside diameter (m)	1.0
	11-15	Height of vent release point (m)	60.7
	16-20	Height of the vent's building (m)	59.0
	21-25	Minimum cross-sectional area for the vent's building (m^2)	1370.0
	26-30	Wind height used for vent elevated release	11.
	31-35	Vent heat emission rate (cal/sec)	0.
15	1	Identification for release point	A
	2-5	Intermittent releases	1
	6-10	Number of intermittent releases per year for this release point	100
	11-15	Average number of hours per intermittent release	1

(1) Appropriate data to be supplied

(2) Obtained from cross-sectional topographic maps

APPENDIX B

DOSE PARAMETERS FOR RADIOIODINES, PARTICULATES, AND TRITIUM

This appendix contains the methodology which was used to calculate the dose parameters for radioiodines, particulates, and tritium to show compliance with 10 CFR 20 and Appendix I of 10 CFR 50 for gaseous effluents. These dose parameters, P_i and R_i, were calculated using the methodology outlined in NUREG 0133 along with Regulatory Guide 1.109, Revision 1. The following sections provide the specific methodology which was utilized in calculating the P_i and R_i values for the various exposure pathways.

B.1 Calculation of P_i

The dose parameter, P_i, contained in the radioiodine and particulates portion of Section 3.3 includes pathway transport parameters of the "i" radionuclide, the receptor's usage of the pathway media, and the dosimetry of the exposure. Pathway usage rates and the internal dosimetry are functions of the receptor's age; however, the youngest age group, the infant, will always receive the maximum dose under the exposure conditions for ODCM Specification 3.2.1.b. For the infant exposure, separate values of P_i may be calculated for the inhalation pathway which is combined with a W parameter based on (X/Q) and the food (milk) and ground pathway which is combined with a W parameter normally based on (D/Q), except for tritium. The following sections provide in detail the methodology which was used in calculating the P_i values for inclusion into this ODCM.

B.1.1 Inhalation Pathway

The evaluation of this pathway consists of estimating the maximum dose to the most critical organ received by an infant through inhalation by:

$$P_{I_I} = K'(BR)\, DFA_i \qquad \text{(B.1-1)}$$

where:

P_{i_I} = Dose parameter for radionuclide "i" for the inhalation pathway, mrem/yr per $\mu Ci/m^3$;

K' = A constant of unit conversion;
= 10^6 pCi/μCi;

BR = The breathing rate of the infant age group, m^3/yr;

DFA_i = The maximum organ inhalation dose factor for the infant age group for radionuclide "i," mrem/pCi.

The age group considered is the infant group. The infant's breathing rate is taken as 1400 m^3/yr from Table E-5 of Regulatory Guide 1.109, Revision 1. The inhalation dose factors for the infant, DFA_i, are presented in Table E-10 of Regulatory Guide 1.109 in units of mrem/pCi. The total body is considered as an organ in the selection of DFA_i.

The incorporation of breathing rate of an infant and the unit conversion factor results in the following equation:

$$P_{i_I} = 1.4 \times 10^9 DFA_i \qquad (B.1\text{-}2)$$

B.1.2 Ground Plane Pathway

The dose factor from ground plane pathway is calculated by:

$$P_{i_G} = K'K''DFG_i \frac{(1-e^{-\lambda_i t})}{\lambda_i} \qquad (B.1\text{-}3)$$

where:

P_{i_G} = Dose parameter for radionuclide "i" for the ground plane pathway, mrem/yr per μCi/sec per m^{-2};

K' = A constant of unit conversion;
= 10^6 pCi/μCi;

K'' = A constant of unit conversion;
= 8760 hr/yr;

λ_i = The radiological decay constant for radionuclide "i," sec^{-1};

t = The exposure period;
= 3.15×10^7 sec (1 year);

DFG_i = The ground plane dose conversion factor for radionuclide "i," mrem/hr per pCi/m^2.

The deposition rate onto the ground plane results in a ground plane concentration that is assumed to persist over a year with radiological decay--the only operating removal mechanism for each radionuclide. The ground plane dose conversion factors for radionuclide "i," DFG_i, are presented in Table E-6 of Regulatory Guide 1.109, Revision 1.

Resolution of the units yields:

$$P_{iG} = 8.76 \times 10^9 \; DFG_i \; \frac{(1-e^{-\lambda_i t})}{\lambda_i} \qquad \text{(B.1-4)}$$

B.1.3 Milk

The dose factor from the cow/goat-milk-man pathway is calculated by:

$$P_{iM} = \frac{K' r \; Q_F \; (U_{ap}) \; F_m}{Y_p \; (\lambda_i + \lambda_w)} \; DFL_i \; e^{-\lambda_i t_f} \qquad \text{(B.1-5)}$$

where:

P_{iM} = Dose parameter for radionuclide "i" for the cow milk or goat milk pathway, mrem/yr per $\mu Ci/sec$ per m^{-2};

K' = A constant of unit conversion;
= 10^6 $pCi/\mu Ci$;

Q_F = The cow's or goat's consumption rate of feed, kg/day (wet weight);

U_{ap} = The infant's milk consumption rate, liters/yr;

Y_p = The agricultural productivity by unit area, kg/m^2;

F_m = The stable element transfer coefficient, pCi/liter per pCi/day;

r = Fraction of deposited activity retained on cow's or goat's feed grass;

DFL_i = The maximum organ ingestion dose factor for radionuclide "i," mrem/pCi;

λ_i = The radiological decay constant for radionuclide "i," sec^{-1};

λ_w = The decay constant for removal of activity on leaf and plant surfaces by weathering, sec^{-1};

= 5.73×10^{-7} sec^{-1} (corresponding to a 14-day half-life);

t_f = The transport time from pasture cow or goat to milk to infant, sec.

A fraction of the airborne deposition is captured by the ground plane vegetation cover. The captured material is removed from the vegetation (grass) by both radiological decay and weathering processes.

Various parameters which were utilized to determine the P_i values for the cow and goat milk pathways are provided in Table B-1. Table E-1 of Regulatory Guide 1.109, Revision 1, provides the stable element transfer coefficients, F_m; and Table E-14 of the same regulatory guide provides the ingestion dose factors, DFL_i, for the infant's organs. The organ with the maximum value of DFL_i was used in the determination of P_i for this pathway. The incorporation of the various constants of Table B-1 into Equation B.1-5 results in the following:

For radioiodines and particulates from cow's milk

$$P_{iM} = 2.4\times10^{10} \frac{rF_m}{\lambda_i + \lambda_w} DFL_i \, e^{-\lambda_i t f} \qquad (B.1\text{-}6)$$

For radioiodines and particulates from goat's milk pathway:

$$P_{iM} = 2.8\times10^{9} \frac{rF_m}{\lambda_i + \lambda_w} DFL_i \, e^{-\lambda_i t f} \qquad (B.1\text{-}7)$$

The concentration of tritium in milk is based on its airborne concentration rather than the deposition rate and is calculated by:

$$P_{T_M} = K'K''' F_m Q_F U_{ap} DFL_T \, 0.75(0.5/H) \qquad (B.1\text{-}8)$$

where:

P_{T_M} = Dose parameter for tritium for the cow milk and goat milk pathways, mrem/yr per $\mu Ci/m^3$;

K''' = A constant of unit conversion;
= 10^3 gm/kg;

H = Absolute humidity of the atmosphere, gm/m^3;

0.75 = The fraction of total feed that is water;

0.5 = The ratio of the specific activity of the feed grass water to the atmospheric water;

DFL_T = Maximum organ ingestion dose factor for tritium, mrem/pCi.

B.2 Calculation of R_i Following Regulatory Guide 1.109 Methodology

The radioiodine and particulate ODCM Specification 3.5.2.1 is applicable to the location in the unrestricted area where the combination of existing pathways and receptor age groups indicates that the maximum potential exposure occurs. The inhalation and ground plane exposure pathways shall be considered to exist at all locations. The grass-goat-milk, the grass-cow-milk, grass-cow-meat, and vegetation pathways are considered based on their existence at the various locations. R_i values have been calculated for the adult, teen, child, and infant age groups for the ground plane, cow milk, goat milk, vegetable, and beef ingestion pathways. The methodology which was utilized to calculate these values (see Tables 3.5-1 through 3.5-19) is presented below and follows the guidance given in Regulatory Guide 1.109.

B.2.1 Inhalation Pathway

The dose factor from the inhalation pathway is calculated by:

$$R_{iI} = K'(BR)_a (DFA_i)_a \qquad \text{(B.2-1)}$$

where:

R_{iI} = Dose factor for each identified radionuclide "i" of the organ of interest, mrem/yr per $\mu Ci/m^3$;

K' = A constant of unit conversion;
= 10^6 pCi/μCi;

$(BR)_a$ = Breathing rate of the receptor of age group a, m^3/yr;

$(DFA_i)_a$ = Organ inhalation dose factor for radionuclide "i" for the receptor of age group a, mrem/pCi.

The breathing rates $(BR)_a$ for the various age groups are tabulated below, as given in Table E-5 of Regulatory Guide 1.109, Revision 1.

Age Group (a)	Breathing Rate (m^3/yr)
Infant	1400
Child	3700
Teen	8000
Adult	8000

Inhalation dose factors $(DFA_i)_a$ for the various age groups are given in Tables E-7 through E-10 of Regulatory Guide 1.109, Revision 1.

B.2.2 Ground Plane Pathway

The ground plane pathway dose factor is calculated by:

$$R_{ig} = I_i K'K''(SF) DFG_i \frac{(1-e^{-\lambda_i t})}{\lambda_i} \qquad (B.2-2)$$

where:

R_{ig} = Dose factor for the ground plane pathway for each identified radionuclide "i" for the organ of interest, mrem/hr per µCi/sec per m^{-2};

K' = A constant of unit conversion;
= 10^6 pCi/µCi;

K" = A constant of unit conversion;
= 8760 hr/year;

λ_i = The radiological decay constant for radionuclide "i," sec^{-1};

t = The exposure time, sec;
= 4.73×10^8 sec (15 years);

DFG_i = The ground plane dose conversion factor for radionuclide "i;" mrem/hr per pCi/m^2;

A tabulation of DFG_i values is presented in Table E-6 of Regulatory Guide 1.109, Revision 1.

SF = The shielding factor (dimensionless);

A shielding factor of 0.7 is suggested in Table E-15 of Regulatory Guide 1.109, Revision 1.

I_i = Factor to account for fractional deposition of radionuclide "i."

For radionuclides other than iodine, the factor I_i is equal to one. For radioiodines, the value of I_i may vary. However, a value of 1.0 was used in calculating the R values in Table 3.5-1.

B.2.3 Grass Cow or Goat Milk Pathway

The dose factor for the cow milk or goat milk pathway for each radionuclide for each organ is calculated by:

$$R_{iM} = I_i K' Q_F U_{ap} F_m (DFL_i)_a \, e^{-\lambda_i t_f} \left[f_p f_s \left[\frac{r(1-e^{-\lambda_{E_i} t_e})}{Y_p \lambda_{E_i}} + \frac{B_{iv}(1-e^{-\lambda_i t_b})}{P\lambda_i}\right] + (1-f_p f_s)\left[\frac{r(1-e^{-\lambda_{E_i} t_e})}{Y_s \lambda_{E_i}} + \frac{B_{iv}(1-e^{-\lambda_i t_b})}{P\lambda_i}\right] e^{-\lambda_i t_h} \right] \quad (B.2\text{-}3)$$

where:

R_{iM} = Dose factor for the cow milk or goat milk pathway, for each identified radionuclide "i" for the organ of interest, mrem/yr per $\mu Ci/sec$ per m^{-2};

K' = A constant of unit conversion;
= 10^6 pCi/μCi;

Q_F = The cow's or goat's feed consumption rate, kg/day (wet weight);

U_{ap} = The receptor's milk consumption rate for age group a, liters/yr;

Y_p = The agricultural productivity by unit area of pasture feed grass, kg/m^2;

Y_s = The agricultural productivity by unit area of stored feed, kg/m^2;

F_m = The stable element transfer coefficients, pCi/liter per pCi/day;

r = Fraction of deposited activity retained on cow's feed grass;

$(DFL_i)_a$ = The organ ingestion dose for radionuclide "i" for the receptor in age group a, mrem/pCi;

λ_{E_i} = $\lambda_i + \lambda_w$;

λ_i = The radiological decay constant for radionuclide "i," sec^{-1};

λ_w = The decay constant for removal of activity on leaf and plant surfaces by weathering, sec^{-1};
= 5.73×10^{-7} sec^{-1} (corresponding to a 14 day half-life);

t_f = The transport time from feed to cow, or goat to milk, to receptor, sec;

t_h = The transport time for harvest, to cow or goat, to consumption, sec;

t_b = Period of time that sediment is exposed to gaseous effluents, sec;

B_{iv} = Concentration factor for uptake of radionuclide "i" from the soil by the edible parts of crops, pCi/Kg (wet weight) per pCi/Kg (dry soil);

P = Effective surface density for soil, Kg (dry soil)/m^2;

f_p = Fraction of the year that the cow or goat is on pasture;

f_s = Fraction of the cow feed that is pasture grass while the cow is on pasture;

t_e = Period of pasture grass and crop exposure during the growing season, sec;

I_i = Factor to account for fractional deposition of radionuclide "i."

For radionuclides other than iodine, the factor I_i is equal to one. For radioiodines, the value of I_i may vary. However, a value of 1.0 was used in calculating the R values in Tables 3.5-8 through 3.5-15.

Milk cattle and goats are considered to be fed from two potential sources, pasture grass and stored feeds. Following the development in Regulatory Guide 1.109, Revision 1, the value of f_s was considered unity in lieu of site-specific information. The value of f_p was 0.667 based upon an 8-month grazing period.

Table B-1 contains the appropriate parameter values and their source in Regulatory Guide 1.109, Revision 1.

The concentration of tritium in milk is based on the airborne concentration rather than the deposition. Therefore, the R_i is based on X/Q:

$$R_{T_M} = K'K'''F_m Q_F U_{ap} (DFL_i)_a \, 0.75(0.5/H) \qquad (B.2\text{-}4)$$

where:

R_{T_M} = Dose factor for the cow or goat milk pathway for tritium for the organ of interest, mrem/yr per $\mu Ci/m^3$;

K''' = A constant of unit conversion;
= 10^3 gm/kg;

H = Absolute humidity of the atmosphere, gm/m^3;

0.75 = The fraction of total feed that is water;

0.5 = The ratio of the specific activity of the feed grass water to the atmospheric water.

and other parameters and values are given above. A value of H = 8 grams/ $meter^3$, was used in lieu of site-specific information.

B.2.4 Grass-Cow-Meat Pathway

The integrated concentration in meat follows in a similar manner to the development for the milk pathway, therefore:

$$R_{iB} = I_i K' Q_F U_{ap} F_f \, (DFL_i)_a \, e^{-\lambda_i t_s} \left[f_p f_s \left[\frac{r(1-e^{-\lambda_{E_i} t_e})}{Y_p \lambda_{E_i}} + \frac{B_{iv}(1-e^{-\lambda_i t_b})}{P \lambda_i} \right] + \right.$$

$$\left. (1-f_p f_s) \left[\frac{r(1-e^{-\lambda_{E_i} t_e})}{Y_s \lambda_{E_i}} + \frac{B_{iv}(1-e^{-\lambda_i t_b})}{P \lambda_i} \right] e^{-\lambda_i t_h} \right] \qquad (B.2\text{-}5)$$

where:

R_{iB} = Dose factor for the meat ingestion pathway for radionuclide "i" for any organ of interest, mrem/yr per $\mu Ci/sec$ per m^{-2};

F_f = The stable element transfer coefficient, pCi/Kg per pCi/day;

U_{ap} = The receptor's meat consumption rate for age group a, kg/yr;

t_s = The transport time from slaughter to consumption, sec;

t_h = The transport time from harvest to animal consumption, sec;

t_e = Period of pasture grass and crop exposure during the growing season, sec;

I_i = Factor to account for fractional deposition of radionuclide "i."

For radionuclides other than iodine, I_i is equal to one. For radioiodines, the value of I_i may vary. However, a value of 1.0 was used in calculating the R values in Tables 3.5-5 through 3.5-7.

All other terms remain the same as defined in Equation B.2-3. Table B-2 contains the values which were used in calculating R_i for the meat pathway.

The concentration of tritium in meat is based on its airborne concentration rather than the deposition. Therefore, the R_i is based on X/Q.

$$R_{T_B} = K'K''' F_f Q_F U_{ap} (DFL_i)_a \, 0.75(0.5/H) \qquad \text{(B.2-6)}$$

where:

R_{T_B} = Dose factor for the meat ingestion pathway for tritium for any organ of interest, mrem/yr per $\mu Ci/m^3$.

All other terms are defined in Equations B.2-4 and B.2-5.

B.2.5 Vegetation Pathway

The integrated concentration in vegetation consumed by man follows the expression developed in the derivation of the milk factor. Man is considered to consume two types of vegetation (fresh and stored) that differ only in the time period between harvest and consumption, therefore:

$$R_{i_v} = I_i K'(DFL_i)_a \left[U_a^L f_L e^{-\lambda_i t_L} \left[\frac{r(1-e^{-\lambda_{E_i} t_e})}{Y_v \lambda_{E_i}} + \frac{B_{iv}(1-e^{-\lambda_i t_b})}{P\lambda_i} \right] + U_a^S f_g e^{-\lambda_i t_h} \left[\frac{r(1-e^{-\lambda_{E_i} t_e})}{Y_v \lambda_{E_i}} + \frac{B_{iv}(1-e^{-\lambda_i t_b})}{P\lambda_i} \right] \right] \qquad (B.2\text{-}7)$$

where:

R_{iv} = Dose factor for vegetable pathway for radionuclide "i" for the organ of interest, mrem/yr per µCi/sec per m^{-2};

K' = A constant of unit conversion;
= 10^6 pCi/µCi;

U_a^L = The consumption rate of fresh leafy vegetation by the receptor in age group a, kg/yr;

U_a^S = The consumption rate of stored vegetation by the receptor in age group a, kg/yr;

f_L = The fraction of the annual intake of fresh leafy vegetation grown locally;

f_g = The fraction of the annual intake of stored vegetation grown locally;

t_L = The average time between harvest of leafy vegetation and its consumption, sec;

t_h = The average time between harvest of stored vegetation and its consumption, sec;

Y_v = The vegetation areal density, kg/m^2;

t_e = Period of leafy vegetable exposure during growing season, sec;

I_i = Factor to account for fractional deposition of radionuclide "i."

All other factors as defined before.

For radionuclides other than iodine, the factor I_i is equal to one. For radioiodines, the value of I_i may vary. However, a value of 1.0 was used in Tables 3.5-2 through 3.5-4.

Table B-3 presents the appropriate parameter values and their source in Regulatory Guide 1.109, Revision 1.

In lieu of site-specific data default values for f_L and f_g, 1.0 and 0.76, respectively, were used in the calculations on R_i. These values were obtained from Table E-15 of Regulatory Guide 1.109, Revision 1.

The concentration of tritium in vegetation is based on the airborne concentration rather than the deposition. Therefore, the R_i is based on X/Q:

$$R_{T_v} = K'K''[U_a^L f_L + U_a^S f_g](DFL_i)_a \, 0.75(0.5/H) \qquad \text{(B.2-8)}$$

where:

R_{T_v} = Dose factor for the vegetable pathway for tritium for any organ of interest, mrem/yr per $\mu Ci/m^3$.

All other terms remain the same as those in Equations B.2-4 and B.2-7.

TABLE B-1

Parameters For Cow and Goat Milk Pathways

Reference (Reg. Guide 1.109, Rev. 1	Parameter	Value
Q_F (kg/day)	50 (cow) 6 (goat)	Table E-3 Table E-3
Y_p (kg/m^2)	0.7	Table E-15
T_f (seconds)	1.73×10^5 (2 days)	Table E-15
r	1.0 (radioiodines) 0.2 (particulates)	Table E-15 Table E-15
$(DFL_i)_a$ (mrem/pCi) F_m (pCi/day per pCi/liter)	Each radionuclide Each stable element	Tables E-11 to E-14 Table E-1 (cow) Table E-2 (goat)
T_b (seconds)	4.73×10^8 (15 yr)	Table E-15
Y_s (kg/m^2)	2.0	Table E-15
Y_p (kg/m^2)	0.7	Table E-15
t_h (seconds)	7.78×10^6 (90 days)	Table E-15
U_{ap} (liters/yr)	330 infant 330 child 400 teen 310 adult	Table E-5 Table E-5 Table E-5 Table E-5
t_e (seconds)	2.59×10^6 (pasture) 5.18×10^6 (stored feed)	Table E-15
B_{iv} (pCi/kg [wet weight] per pCi/kg [dry soil])	Each stable element	Table E-1
P kg (dry soil/m^2)	240	Table E-15

TABLE B-2

Parameters For The Meat Pathway

Reference (Reg. Guide 1.109, Rev. 1	Parameter	Value
r	1.0 (radioiodines) 0.2 (particulates)	Table E-15 Table E-15
F_f (pCi/kg per pCi/day)	Each stable element	Table E-1
U_{ap} (kg/yr)	0 infant 41 child 65 teen 110 adult	Table E-5 Table E-5 Table E-5 Table E-5
$(DFL_i)_a$ (mrem/pCi)	Each radionuclide	Tables E-11 to E-14
Y_p (kg/m^2)	0.7	Table E-15
Y_s (kg/m^2)	2.0	Table E-15
T_b (seconds)	4.73×10^8 (15 yr)	Table E-15
T_s (seconds)	1.73×10^6 (20 days)	Table E-15
t_h (seconds)	7.78×10^6 (90 days)	Table E-15
t_e (seconds)	2.59×10^6 (pasture) 5.18×10^6 (stored feed)	Table E-15
Q_F (kg/day)	50	Table E-3
B_{iv} (pCi/kg [wet weight] per pCi/kg [dry soil])	Each stable element	Table E-1
P (kg [dry soil/m^2])	240	Table E-15

TABLE B-3

Parameters for The Vegetable Pathway

Reference (Reg. Guide 1.109, Rev. 1	Parameter	Value
r (dimensionless)	1.0 (radioiodines)	Table E-1
	0.2 (particulates)	Table E-1
$(DFL_i)_a$ (mrem/Ci)	Each radionuclide	Tables E-11 to E-14
Q_F (kg/day)	50 (cow)	Table E-3
	6 (goat)	Table E-3
U_a^L (kg/yr) - Infant	0	Table E-5
- Child	26	Table E-5
- Teen	42	Table E-5
- Adult	64	Table E-5
U_a^S (kg/yr) - Infant	0	Table E-5
- Child	520	Table E-5
- Teen	630	Table E-5
- Adult	520	Table E-5
T_L (seconds)	8.6×10^4 (1 day)	Table E-15
t_h (seconds)	5.18×10^6 (60 days)	Table E-15
Y_v (kg/m^2)	2.0	Table E-15
t_e (seconds)	5.18×10^6 (60 days)	Table E-15
T_b (seconds)	4.73×10^8 (15 yr)	Table E-15
P (kg [dry soil/m^2])	240	Table E-15
B_{iv} (pCi/kg [wet weight] per pCi/kg [dry soil])	Each stable element	Table E-1

The calculations that support the 2500 CFM maximum instantaneous flow rate for a C.V. pressure relief as calculated by CP&L Nuclear Fuels Section, Project 86-0015, are found in File 2486-0015 and were performed by Mr. Talmage Clements, 10 February 1986.

APPENDIX C

LOWER LIMIT OF DETECTABILITY

C.1 Radiological Environmental Monitoring Program

The LLD[1,2] is defined as the smallest concentration of radioactive material in a sample that will yield a net count, above system background, that will be detected with 95% probability with only 5% probability of falsely concluding that a blank observation represents a "real" signal.

For a particular measurement system, which may include radiochemical separation:

$$LLD = \frac{4.66\ S_b}{E\ .\ V\ .\ 2.22\ .\ Y\ .\ \exp^{(-\lambda\Delta t)}}$$

where:

LLD	=	"A priori" lower limit of detection as defined above, as picocuries per unit mass or volume;
S_b	=	Standard deviation of the background counting rate or of the counting rate of a blank sample, as appropriate, as counts per minute;
E	=	Counting efficiency, as counts per disintegration;
V	=	Sample size in units of mass or volume;
2.22	=	Number of disintegrations per minute per picocurie;
Y	=	Fractional radiochemical yield, when applicable;
λ	=	Radioactive decay constant for the particular radionuclide;
and		
Δt	=	The elapsed time between sample collection or end of the sample collection period and time of counting;

Typical values of efficiency, volume/mass, chemical yield, and radionuclide decay corrections are to be used in the calculation.

It should be recognized that the LLD is defined as an a priori (before the fact) limit representing the capability of a measurement system and not as an a posteriori (after the fact) limit for a particular measurement. Analyses shall be performed in such a manner that the stated LLDs will be achieved under routine conditions. Occasionally background fluctuations, unavoidable small sample sizes, the presence of interfering nuclides, or other uncontrollable circumstances may render these LLDs unachievable. In such cases, the contributing factors shall be identified and described in the Annual Radiological Environmental Operating Report pursuant to Technical Specification 5.6.2.

C.2 Radioactive Waste Sampling and Analysis Program

The LLD is defined as the smallest concentration of radioactive material in a sample that will yield a net count, above system background, that will be detected with 95% probability with only 5% probability of falsely concluding that a blank observation represents a "real" signal.

For a particular measurement system, which may include radiochemical separation:

$$LLD = \frac{4.66\ S_b}{E \bullet V \bullet 2.22 \times 10^6 \bullet Y \bullet \exp^{(-\lambda \Delta t)}}$$

where:

LLD = "A" priori" lower limit of detection as defined above, as microcuries per unit mass or volume;

S_b = standard deviation of the background counting rate or of the counting rate of a blank sample, as appropriate, as counts per minute;

E = Counting efficiency, as counts per disintegration;

V = Sample size in units of mass or volume;

2.22×10^6 = Number of disintegrations per minute per microcurie;

Y = Fractional radiochemical yield, when applicable;

λ = Radioactive decay constant for the particular radionuclide; and

Δt = The elapsed time between sample collection or end of the sample collection period and time of counting.

Typical values of E, V, Y, and Δt should be used in the calculation.

It should be recognized that the LLD is defined as an a priori (before the fact) limit representing the capability of a measurement system and not as an a posteriori (after the fact) limit for a particular measurement.

C.3 Radioactive Gaseous Waste Monitoring System

The LLD is defined as the smallest concentration of radioactive material in a sample that will yield a net count, above system background, that will be detected with 95% probability with only 5% probability of falsely concluding that a blank observation represents a "real" signal.

For a particular measurement system[3]:

$$LLD = \frac{4.66\sqrt{\frac{Bkg}{2\tau}}}{E}$$

where:

LLD = "A" priori" lower limit of detection as defined above, as microcuries per cubic centimeter,

Bkg = the background counting rate as counts per minute,

E = counting efficiency, as $\frac{\text{counts per minute}}{\text{microcurie per cubic centimeter}}$

τ = the time constant for the particular measurement system.

Typical values of E, and Bkg should be used in the calculation.

It should be recognized that the LLD is defined as an a priori (before the fact) limit representing the capability of a measurement system and not as an a posteriori (after the fact) limit for a particular measurement.

References

1. HASL-300 (Suppl. 4), HASL Procedures Manual, (1972).

2. NBS SP456 "The Minimum Detectable Activity Concept," J. C. Lockamy (1976).

3. NUREG/CR-4007, Lower Limit of Detection: Definition and Elaboration of a Proposed Position for Radiological Effluent and Environmental Measurements, (September 1984).

TABLE D-1

Liquid Process Monitors

Name	R #	ID #	Drawing #
Containment Vessel Fan Cooling Water	16	R-16	C997261
Component Cooling Water	17	R-17	C997246
Liquid Waste Disposal	18	PI 871109	NRC Industries 4PI Liquid Sample Manual
Condensate Polisher Liquid Waste	37	R-37	Plant Mod.-723 H.B.R.-2-9065
Steam Generator Blowdown	19A 19B 19C	R-19A R-19B R-19C	Mod 898

Liquid Radwaste Flow Measurement Devices

Liquid Radwaste Flow (ITT Barton Flow Integrator)	N/A	FT 1064	

TABLE D-2
Gaseous Process Monitors

Name	R #	ID #	Drawing #	Sample Flow Rate Measurement Device	System Flow Rate Measurement Device
Containment Vessel Particulate	11	11	D997556	F&P Co. Flow Tube FP-3/4-27-G 10/80	UGC Microflow 3000 (if sampling stack)
Containment Vessel Gaseous	12	12	D997556	F&P Co. Flow Tube FP-3/4-27-G 10/80	UGC Microflow 3000 (if sampling stack)
Plant Vent Low Range	14C	R-14	Mod 1005	Kurz 4200 Isokinetic Sample System	F-14 Plant Vent Stack Flow Monitor (Kurz)
Fuel Handling Building Basement Exhaust	20	R-20	C998233	Fisher Porter Flowmeter Mod. 10A35755Z Serial 6908A0837A1	None (Use fan ratings)
Fuel Handling Building Upper Level Exhaust	21	R-21	C9988233	Fisher Porter Flowmeter Mod. 1043565 Mod. 6908A0837A1	None (Use fan ratings)

Figure D-1
H. B. ROBINSON LIQUID RADWASTE PROCESS EFFLUENT SYSTEM *

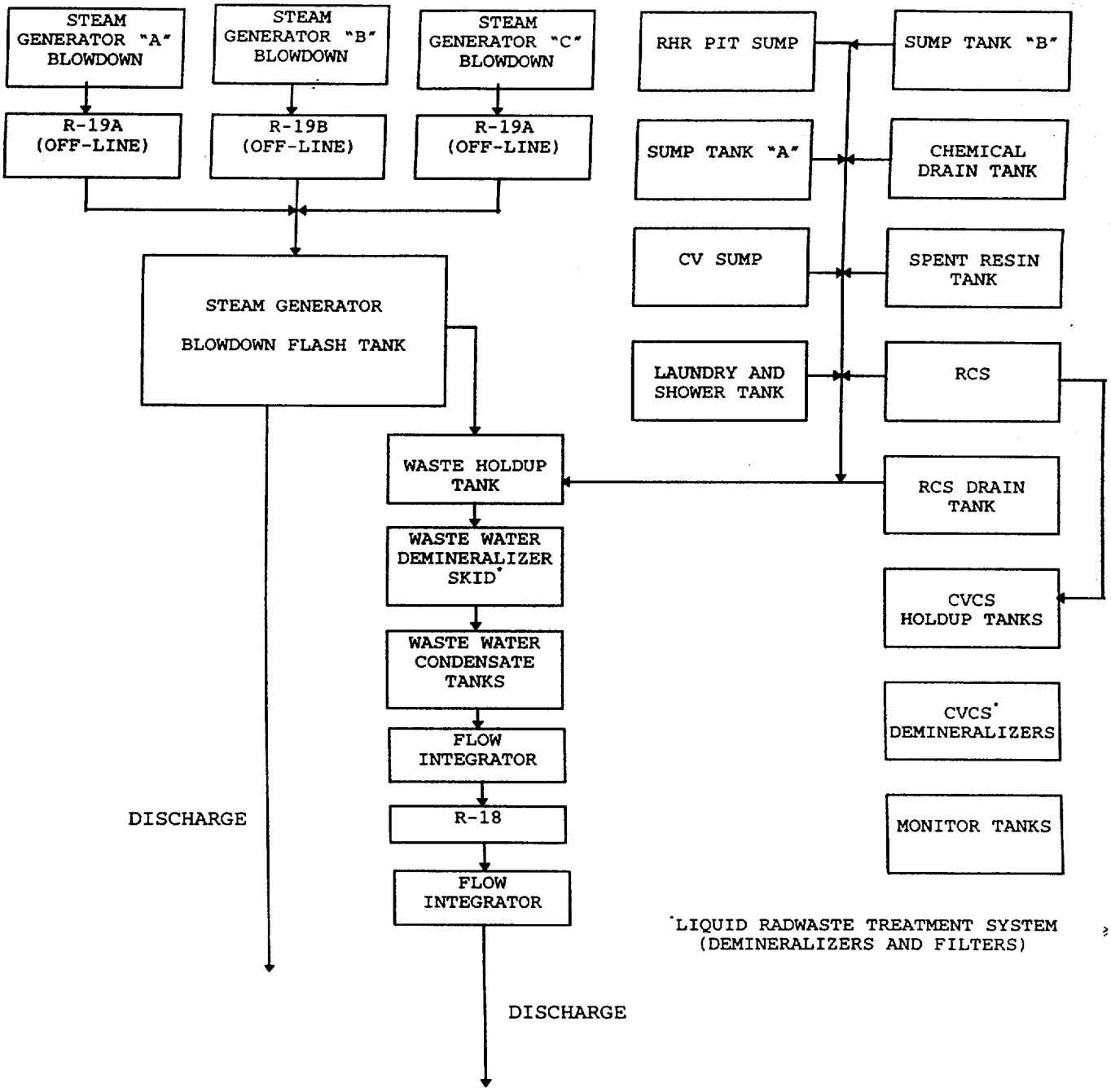

Figure D-2
H. ROBINSON GASEOUS RADWASTE EFFLUENT SYSTEM *

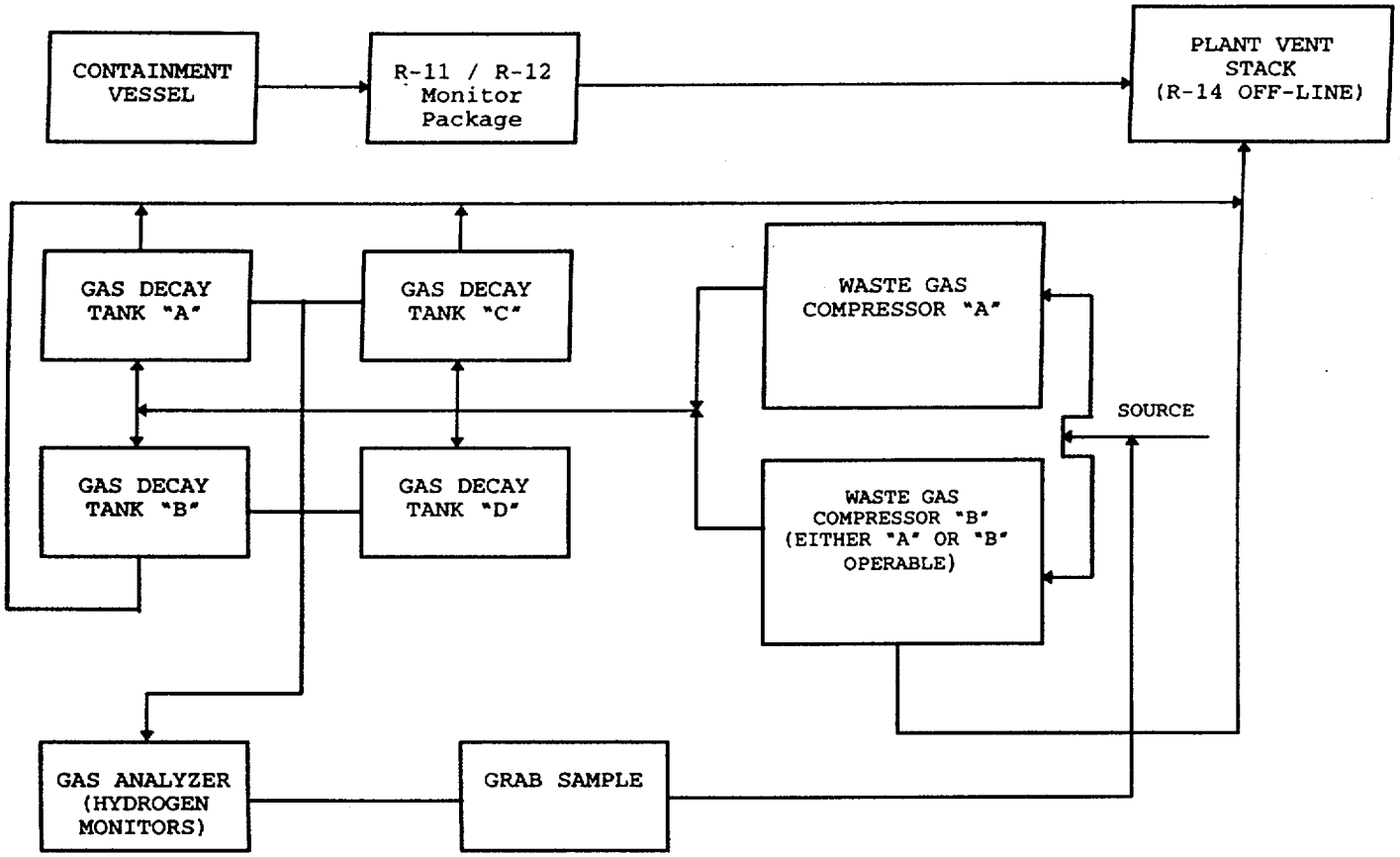

* SIMPLIFIED BLOCK FLOW DIAGRAM

THE GASEOUS RADWASTE SYSTEM MAY BE COMPRISED OF ONE WASTE GAS COMPRESSOR AND ONE WASTE GAS DECAY TANK.