Florida Power & Light Company, 9760 SW 344 St., Fla City, FL 33035

FPL

L-2001-65
10 CFR 54

APR 19 2001

U.S. Nuclear Regulatory Commission
Attn: Document Control Desk
Washington, D.C. 20555

Re: Turkey Point Units 3 and 4
Docket Nos. 50-250 and 50-251
Response to Request for Additional Information for the Review of the Turkey Point Units 3 and 4 License Renewal Application

By letter dated February 1, 2001, the NRC requested additional information regarding the Turkey Point Units 3 and 4 License Renewal Application (LRA). Attachment 1 to this letter contains the responses to the Requests for Additional Information (RAIs) associated with Appendix B, Aging Management Programs, Section 4.2, Reactor Vessel Irradiation Embrittlement, and Subsection 4.7.1, Bottom Mounted Instrumentation Thimble Tube Wear of the LRA.

Should you have any further questions, please contact E. A. Thompson at (305)246-6921.

Very truly yours,

R. J. Hovey
Vice President - Turkey Point

RJH/EAT/hlo

Attachment
Enclosure (5 copies)

A084

cc: U.S. Nuclear Regulatory Commission, Washington, D.C.

Chief, License Renewal and Standardization Branch
Project Manager - Turkey Point License Renewal
Project Manager - Turkey Point

U.S. Nuclear Regulatory Commission, Region II
Regional Administrator, Region II, USNRC
Senior Resident Inspector, USNRC, Turkey Point Plant

Other

Mr. Robert Butterworth
Attorney General
Department of Legal Affairs
The Capitol
Tallahassee, FL 32399-1050

Mr. William A. Passetti, Chief
Department of Health
Bureau of Radiation Control
2020 Capital Circle, SE, Bin #C21
Tallahassee, FL 32399-1741

Mr. Joe Meyers, Director
Division of Emergency Management
2555 Shumard Oak Drive
Tallahassee, FL 32399-2100

County Manager
Miami-Dade County
111 NW 1 Street 29th Floor
Miami, FL 33128

Mr. Douglas J. Walters
Nuclear Energy Institute
1776 I Street NW
Suite 400
Washington, D.C. 20006

Turkey Point Units 3 and 4
Docket Nos. 50-250 and 50-251

Response to Request for Additional Information for the Review of the Turkey Point Units 3 and 4, License Renewal Application

STATE OF FLORIDA)
) ss
COUNTY OF MIAMI-DADE)

R. J. Hovey being first duly sworn, deposes and says:

That he is Vice President - Turkey Point of Florida Power and Light Company, the Licensee herein;

That he has executed the foregoing document; that the statements made in this document are true and correct to the best of his knowledge, information and belief, and that he is authorized to execute the document on behalf of said Licensee.

R. J. Hovey

Subscribed and sworn to before me this
19th day of April, 2001.

Olga Hanek

Olga Hanek
Name of Notary Public (Type or Print)

OLGA HANEK
MY COMMISSION # CC 926970
EXPIRES: June 18, 2004
Bonded Thru Notary Public Underwriters

R. J. Hovey is personally known to me.

ATTACHMENT 1
RESPONSE TO REQUEST FOR ADDITIONAL INFORMATION DATED FEBRUARY 1, 2001 FOR THE REVIEW OF THE TURKEY POINT UNITS 3 AND 4, LICENSE RENEWAL APPLICATION

AGING MANAGEMENT PROGRAMS

SECTION 3.8.5 GALVANIC CORROSION SUSCEPTIBILITY INSPECTION PROGRAM (LRA Section 3.1.5 of Appendix B)

RAI 3.8.5-1:
Describe the operating experience involving galvanic corrosion for Turkey Point Units 3 and 4, as it relates to the industry in general.

FPL RESPONSE:
Galvanic corrosion susceptibility is greatest in raw water (e.g. saltwater) systems due to conductivity and corrosiveness of the environment. Generally, the effects of galvanic corrosion are precluded by design (e.g., isolation to prevent coupling of dissimilar metals or use of coatings). Additionally, periodic inspections may be used to manage the effects of loss of material due to galvanic corrosion. These conditions apply to the Turkey Point raw water systems, such as Intake Cooling Water (ICW) and Fire Protection (FP). The FP system at Turkey Point utilizes city water, which is much less likely to contain contaminants than lake, river or salt water systems, making it less susceptible to galvanic corrosion. The ICW system is more likely to demonstrate the effects of galvanic interaction, therefore, the ICW System Inspection Program, License Renewal Application (LRA), Appendix B, Subsection 3.2.10 (page B-62), is credited with managing loss of material due to galvanic corrosion.

Turkey Point has limited experience with galvanic corrosion in treated water systems. Significant galvanic corrosion is not anticipated in treated water systems due to the high purity of the water and its low conductivity. A review of plant operating and maintenance history indicates only a few incidences of loss of material due to galvanic corrosion in treated water systems. These occurrences have been in plant ventilation chilled water systems and have been addressed by the installation of electrical isolation kits. There have also been instances of loss of material in air handling units where aluminum fins are in contact with copper tubing in areas where condensation pooling has occurred. Because of the limited experience in treated water

systems, the Galvanic Corrosion Susceptibility Inspection Program, LRA Appendix B, Subsection 3.1.5 (page B-18), was developed to quantify the significance of loss of material due to this corrosion mechanism and provide for managing the effects of aging, as required.

SECTION 3.8.6 REACTOR VESSEL INTERNALS INSPECTION PROGRAM (LRA Section 3.1.6 of Appendix B)

RAI 3.8.6-1:
The application describes on-going industry efforts aimed at characterizing the aging effects associated with the reactor vessel internals. What industry programs are FPL participating in to provide direction for inspection of reactor vessel internals? How will FPL integrate the results of the industry programs into the Reactor Vessel Internals Inspection Program?

FPL RESPONSE:
FPL participates in both the Westinghouse Owners Group (WOG) and the Combustion Engineering Owners Group (CEOG). There have been active programs in the WOG, particularly in the area of baffle bolting, and FPL has participated in these programs from their inception, including the Joint Owners Baffle Bolt (JOBB) program. Most of the current industry activities addressing aging effects on reactor vessel internals are being conducted under the Materials Reliability Project (MRP) of EPRI.

FPL has access to MRP products as they are completed. The MRP strategy is to evaluate potential mechanisms and their effects on specific components by evaluating causal parameters such as fluence, material properties, state of stress, etc. Critical locations can thereby be identified and tailored inspections can be conducted on either an integrated industry, NSSS integrated, or plant specific basis.

The following MRP projects are underway:

- Material testing of baffle/former bolts removed from the Point Beach, Farley and Ginna nuclear plants and determination of bolt operating parameters.
- Evaluation of the effects of irradiation which include irradiation assisted stress corrosion cracking, swelling, and stress relaxation in Pressurized Water Reactors.
- Evaluation of irradiated material properties.
- Void swelling "white paper" including available data and effects on reactor vessel internals.
- Development of a long term reactor internals aging management strategy.

Various tasks are addressed as JOBB program activities which include a body of work to be performed by Eletricite'de France (EDF).

As these projects are completed, FPL will evaluate the results and factor them into the Reactor Vessel Internals Inspection Program, as applicable. As noted in Subsection 16.1.6 (page A-34) of Appendix A of the LRA, this program will be in place prior to the end of the initial operating terms for Turkey Point Units 3 and 4.

RAI 3.8.6-2:
Since stress corrosion cracks tend to be very tight, and the surfaces on which the cracking can occur may be rough, as-wrought or as-welded surfaces, what steps will be taken in the selection of examination technique, and what performance demonstration(s) will be used, to ensure that the features of interest (morphology and size) will be detectable with the visual examination proposed?

FPL RESPONSE:
As described in Appendix B, Subsection 3.1.6 (page B-21) of the LRA, FPL's plans provide for visual inspection of accessible components of reactor vessel internals susceptible to cracking due to irradiation assisted stress corrosion cracking. Ultrasonic inspection will be used to address loss of mechanical closure integrity of baffle/former, barrel/former, and lower support column bolts. FPL will continue to monitor industry activities associated with reactor vessel internals inspections and select the most appropriate inspection method at the time that reactor vessel internals inspections are performed.

RAI 3.8.6-3:
Timing of the reactor vessel internals inspections is important. Indicate generally when these inspections will occur (e.g., early in the renewed license period, between years 5 and 15 of the renewed license period, prior to the end of the renewed license period, etc.), and provide the basis for the selection of this timing as optimum to meet the purposes of this inspection program.

FPL RESPONSE:
The inspections performed as part of the Reactor Vessel Internals Inspection Program will correspond with ASME Section XI reactor vessel inspections. In order to develop a baseline for the extended period, FPL plans to perform the first of these reactor vessel internals inspections early in the renewal period on the unit leading in fluence at that time. The second inspection will be conducted on the other unit at the next 10-year inspection interval or 10-12 years into the license renewal term. This will act as a status examination and should provide confidence in the structural integrity for the final ten years of service.

RAI 3.8.6-4:
When will FPL provide for NRC staff review the specific details on this program, including the components to be inspected, requirements for detection and sizing of cracks, and acceptance criteria? The proposed FSAR supplement on this aging management program (Section 16.1.6) should be revised to clarify the intent of FPL in providing the NRC staff with these programmatic details prior to implementation of the program.

FPL RESPONSE:
The specific details of the Reactor Vessel Internals Inspection Program have not been fully developed. The surveillance and inspection associated with this program include:

- Visual examinations to manage cracking due to irradiation assisted stress corrosion cracking (IASCC) and reduction in fracture toughness due to irradiation embrittlement of accessible reactor vessel internals parts exposed to fluences of 10^{21} n/cm^2 or greater, except for bolting. Examinations for the baffle/former bolts, barrel/former bolts, and lower support column bolts are discussed in the next bullet. The reactor vessel internal components exposed to these fluences are identified in LRA Subsection 3.2.5.2.2 (page 3.2-32) and in response to RAI 3.2.5-1 (FPL Letter L-2001-76).
- Volumetric examination to manage the effect of loss of mechanical closure integrity of the baffle/former bolts, barrel/former bolts, and lower support column bolts.
- Analytical methods and inspections to determine the susceptibility of cast austenitic stainless steel (CASS) to loss of fracture toughness due to thermal embrittlement.
- Monitoring of industry progress with regard to validation of dimensional changes due to void swelling as an aging effect requiring management. As stated in LRA Table 3.2-1 (page 3.2-76), the reactor vessel internals parts requiring management for dimensional changes due to void swelling (if any) have yet to be determined.

FPL will submit a report to the NRC prior to the end of the initial 40-year operating license term for Unit 3. This report will summarize the understanding of aging effects applicable to the reactor vessel internals and will contain the Turkey Point inspection plan, including required methods for detection and sizing of cracks and acceptance criteria. FPL will include this commitment in LRA Appendix A, Subsection 16.1.6 (page A-34).

SECTION 3.8.7 SMALL BORE CLASS 1 PIPING INSPECTION (LRA Section 3.1.7 of Appendix B)

RAI 3.8.7-1:
The description states that this inspection program "will be a one-time inspection of a sample of Class 1 piping less than 4 inches in diameter." How will the specific sample set for the inspection be determined, including which lines and which unit are to be inspected, and what measures will be taken to ensure that the sample set encompass both the range of pipe sizes less than 4 inches in diameter, and the variety of configurations (pipe, fittings, and branch connections) in the units?

FPL RESPONSE:
The sample of welds to be examined will be selected by using a risk-informed approach as approved by the NRC pursuant to the below referenced Relief Request. The specific lines for each unit will be established prior to program implementation. The risk-informed approach consists of two essential elements: (1) a degradation mechanism evaluation to assess the failure potential of the piping system under consideration, and (2) a consequence evaluation to assess the impact on plant safety in the event of a piping failure.

Reference: NRC Letter dated November 30, 2000, "Turkey Point Plant, Unit 3 - Relief Request Regarding Safety Evaluation of Risk-Informed Inservice Inspection Program."

RAI 3.8.7-2:
The application indicates that this inspection will occur prior to the end of the initial operating license terms for the two units. What is the earliest point in the initial operating license term that this inspection will occur? Provide the basis for the selection of this timing as optimum to meet the purposes of this inspection program.

FPL RESPONSE:
The Small Bore Class 1 Piping Inspection will occur in the latter part of the initial operating period for the Turkey Point units. Turkey Point has not experienced any failures of Class 1 small bore piping resulting from cracking. The timing of this inspection was established to maximize the operating time, and thus, susceptibility to any age related cracking mechanisms.

RAI 3.8.7-3:
The description of this program indicates that the "volumetric [examination] technique chosen will permit detection and sizing of significant cracking of small bore Class 1 piping." What criteria will be used to determine the smallest magnitude of "significant cracking"?

FPL RESPONSE:
As described in LRA Appendix B, Subsection 3.1.7 (page B-25), any cracking will be evaluated and actions taken as appropriate through the Corrective Action Program. Additionally, the Small Bore Class 1 Piping Inspection Program will incorporate results and recommendations from industry initiatives. For example, FPL plans on incorporating the applicable results of the EPRI industry initiative to assemble previous guidance on NDE methodologies and to provide recommendations for specific NDE technology and variables for the examination technique. The results of industry initiatives will be evaluated for applicability with respect to examination techniques and acceptance criteria.

SECTION 3.9.1.1 **ASME SECTION XI, SUBSECTIONS IWB, IWC, AND IWD INSERVICE INSPECTION PROGRAM (LRA Section 3.2.1.1 of Appendix B)**

RAI 3.9.1.1-1:
Provide a description of the programs to be used for augmented examinations. Specifically address those examinations for which commitments have been made, and those that are in addition to the ASME Code, Section XI, ISI requirements. Identify the system, components, and inspections for which credit is being taken in this AMP.

FPL RESPONSE:
The only augmented examination credited for license renewal is the Steam Generator Feedwater Nozzle Piping Augumented Examination submitted to NRC by FPL letter L-93-220, dated September 9, 1993 and accepted by NRC Safety Evaluation for the Third Ten-Year Interval Inservice Inspection Program Plan and Associated Requests for Relief, dated March 31, 1995. FPL will perform an augumented examination each refueling outage on the steam generator feedwater nozzle piping from the nozzle taper to a point one pipe diameter upstream on the first elbow. These examinations will continue until an engineering evaluation concludes these examinations are no longer required. These examinations are in response to NRC IE Bulletin 79-13, "Cracking in Feedwater System Piping." Although not truly an augmented examination, the reactor vessel examinations (including the closure head) are performed in accordance with ASME Section XI and Regulatory Guide 1.150, Revision 1, Appendix A.

The ASME Section XI Subsections IWB, IWC, and IWD Inservice Inspection Program is credited for aging management of the following reactor coolant system components: reactor vessel, pressurizer, reactor coolant pumps, steam generators, class 1 piping/fittings, valves and bolting. See Table 3.2-1 of the LRA for further breakdown of individual components.

SECTION 3.9.2 BORAFLEX SURVEILLANCE PROGRAM (LRA Section 3.2.2 of Appendix B)

RAI 3.9.2-1:
Provide further information for each of the 10 elements to include a discussion of the current program and the manner in which this program is enhanced to ensure that the aging effects of Boraflex gap formation and dissolution are managed.

FPL RESPONSE:
The current Boraflex Surveillance Program described in LRA Appendix B, Subsection 3.2.2 (page B-41) consists of blackness testing and silica monitoring. The enhanced Boraflex Surveillance Program described in the LRA will consist of areal density testing (or other approved testing methodology) and silica monitoring. Therefore, the enhancement to this program is to perform density testing in lieu of blackness testing. The program enhancements are discussed in the NRC Safety Evaluation transmitted by letter from Kahtan N. Jabbour to T.F. Plunkett, dated July 19, 2000. In accordance with the commitments described in the Safety Evaluation, FPL completed areal density testing of Turkey Point Unit 3 Boraflex on January 24, 2001 using the BADGER method, and will provide a report to the NRC by May 24, 2001 (120 days after completing the surveillance). The report will contain the surveillance results, a summary of the methodology used to project Boraflex degradation, and for each spent fuel pool region, the approximate projected date that the degradation of any Boraflex panel will exceed the assumed degradation values. As required, corrective actions associated with Boraflex degradation are addressed as part of the Corrective Action Program.

The aging effect requiring management for Boraflex is change in material properties. Change in material properties includes gap formation and dissolution. Dissolution is described as "physical loss of boron carbide" in LRA Appendix B, Subsection 3.2.2 (page B-41). Thus, the 10 attributes discussed in LRA Appendix B, Subsection 3.2.2 (page B-41) apply to managing gap formation and dissolution.

RAI 3.9.2-2:
Based on the known mechanism governing the boraflex polymer matrix breakdown, boraflex degradation can be limited by minimizing disturbances to the spent fuel pool and maintaining silica equilibrium between the Boraflex panel and the surrounding water. Provide a description of the steps taken, if any, to limit the disturbance of the quiescent state of the spent fuel pool.

FPL RESPONSE:
The silica concentration in the spent fuel pool water is considered to be near equilibrium since the purification system has a low turnover rate and a low propensity to remove soluble silica, and no special measures are taken to reduce its concentration. The overall changes in the concentration including its variability, are small and slow with respect to time. As a result, no additional steps are taken to limit disturbances to the quiescent state of the spent fuel pool.

RAI 3.9.2-3:
The staff agrees that blackness testing will provide information regarding gap formation consistent with the description of the change in material properties, due to irradiation, given in Section 3.6.2.2.2 of the LRA. However, justify the exclusion of the change in material properties due to both irradiation and convective forces in the spent fuel pool; i.e., a change in material properties due to dissolution of the boraflex panel and provide more detail discussing how the enhanced Boraflex Surveillance Program will determine the amount of degradation of the Boraflex material through this mechanism.

FPL RESPONSE:
The enhanced Boraflex Surveillance Program evaluates changes in material properties due to dissolution of the Boraflex panel as stated in LRA Appendix B, Subsection 3.2.2 (page B-41). As discussed in this subsection, the enhanced Boraflex Surveillance Program involves monitoring silica levels and Boraflex density testing (or other approved testing method). More specifically, this testing method determines the areal density, namely, the weight per unit area, of the encapsulated boron carbide via neutron attenuation. Comparison of the measured areal density relative to the minimum required areal density is used to determine the amount of boron carbide remaining which is indicative of the degradation of each panel.

RAI 3.9.2-4:
The applicant commits to checking the density of the panels (or other approved methods) to ascertain the physical loss of boron carbide. Provide additional details describing the nature of this commitment. The description should include what alternatives will be in place in the event that the degree to which this valid aging effect is occurring cannot be determined.

FPL RESPONSE:
The technical nature of this commitment is discussed in the response to RAI 3.9.2-3. The measurement of areal density is made relative to the irradiated dose of each panel. Panels to be tested are chosen to cover the range of irradiated dose, thus providing data indicative of the aging effect due to the dose at the panel and the accumulated time of irradiation. This method has been accepted by the NRC for use in plant specific applications (including Turkey Point, as referenced in response to RAI 3.9.2-1) and has been successfully utilized by several utilities to determine the loss of boron carbide. Therefore, the need for alternative testing methods is not anticipated.

RAI 3.9.2-5:
Blackness testing is an appropriate method for determining gap formation in the panels but is not indicative of the concentration of boron carbide remaining in the panel. Discuss how the enhanced Boraflex Surveillance Program will support conclusions drawn from the applicant's operating experience.

FPL RESPONSE:
The enhanced Boraflex Surveillance Program is intended to provide data on the concentration of boron carbide remaining in the panel in addition to data on gaps. The additional data associated with the panels' areal density will provide more detailed information indicative of the physical condition of the Boraflex panels. This information is used to verify whether the conclusions based on operating experience and the design assumptions used in the criticality analysis of record are bounding.

RAI 3.9.2-6:
The staff notes that the only aging effect discussed in Section 3.6.2.2.2 of the LRA is gap formation. Clarify how this aging effect will be detected through Blackness Testing.

FPL RESPONSE:
The enhanced Boraflex Surveillance Program as stated in LRA Appendix B, Subsection 3.2.2 (page B-41) involves testing of the Boraflex panels for areal density as well as gaps and shrinkage. These effects are related to the irradiated dose of each panel, which is a function of dose rate and time. These effects are indicative of aging and are detectable by the enhanced Boraflex Surveillance Program.

RAI 3.9.2-7:
Clarify how shrinkage, gap formation, and density changes of the Boraflex panels are currently trended and analyzed and provide details of how the enhanced program will affect the current analyses of these parameters.

FPL RESPONSE:
Data on shrinkage and gap formation from periodic Boraflex surveillances have previously been evaluated to determine the distribution of physical parameters such as number, size, and location within and among the tested panels. Data on the formation of shrinkage and gaps are not trended, since the physical factors that contribute to their formation tend to saturate at a given dose based on industry experience. Therefore, this type of data has previously been taken from the higher dose panels to verify that the criticality analysis assumptions, that were conservatively chosen, continue to bound the observed data.

The enhanced Boraflex Surveillance Program will continue to evaluate shrinkage and gap data as well as incorporate physical characteristics associated with areal density of the tested panels relative to their irradiated dose. Data on areal density changes are not currently trended, since there is no previous history on this data. However, areal density data will be evaluated to determine the impact on assumptions in the criticality analysis and subsequent areal density tests will be evaluated for trending.

RAI 3.9.2-8:
The applicant states that the acceptability of Boraflex degradation is controlled by the assumptions in the criticality analysis. Provide details regarding how the surveillance results assure that the 5% subcriticality margin will be maintained given that dissolution of the Boraflex is not addressed in the existing program.

FPL RESPONSE:
The enhanced Boraflex Surveillance Program as stated in LRA Appendix B, Subsection 3.2.2 (page B-41) in connection with the commitments referenced in RAI Response 3.9.2-1 involves areal density testing of the Boraflex panels. This testing provides a comparison of the measured areal density relative to the minimum required areal density, and is used to determine the amount of boron carbide remaining to address boron carbide dissolution. Evaluation of this data, along with the data on gaps and shrinkage, against the design assumptions in the criticality analysis of record assures that the 5% subcriticality margin will be maintained.

SECTION 3.9.3 BORIC ACID WASTAGE SURVEILLANCE PROGRAM (LRA Section 3.2.3 of Appendix B)

RAI 3.9.3-1:
Provide further detail regarding the enhancement of this program. Specifically, provide details discussing how the systems outside containment, currently inspected under other existing programs, will continue to be inspected under the enhanced Boric Acid Wastage Surveillance Program.

FPL RESPONSE:
LRA Appendix B, Subsection 3.2.3 (page B-44) provides a list of systems for which the Boric Acid Wastage Surveillance Program has been credited for managing loss of material and loss of mechanical closure integrity due to aggressive chemical attack. The Boric Acid Wastage Surveillance Program will be enhanced to include Spent Fuel Pool Cooling and Waste Disposal in the scope of inspection of systems outside containment. Spent Fuel Pool Cooling and Waste Disposal are currently inspected under other plant walkdown and inspection programs such as 10 CFR 50.65 Maintenance Rule inspections and operator rounds. Additionally, procedures involving visual inspection of systems outside containment, that contain boric acid, will be enhanced to provide additional guidance for evaluating potential effects of boric acid leakage (i.e., boric acid corrosion) on adjacent components and structural components. These procedures currently require leakage to be corrected or evaluated but do not explicitly address the potential for corrosion of adjacent components subject to borated water.

RAI 3.9.2-2:(sic) [3.9.3-2]
Discuss the exclusion of components constructed from aluminum, brass, bronze, carbon, and galvanized steel which may also be exposed to the corrosive boric acid environment.

FPL RESPONSE:
In LRA Appendix C, Subsection 7.5.3.1 (page C-43) states that loss of material due to aggressive chemical attack is an aging effect requiring management for carbon steel, low alloy steel, cast iron, and galvanized carbon steel susceptible to borated water leaks. As stated in LRA Appendix C, Section 5.1 (page C-18) other metals, such as copper, copper alloys, nickel, nickel alloys, and aluminum, are resistant to boric acid corrosion, therefore, loss of material due to aggressive chemical attack does not require management for these materials.

Reference: Handbook of Corrosion Data, American Society of Metals, 1995.

RAI 3.9.2-3(sic) [3.9.3-3]
In the case of electrical cables or insulated piping, discoloration of the insulation is used to indicate boric acid coolant leakage. Provide the acceptance criteria and the bases for this method. In addition, provide operating experience that identifies aging prior to loss of function.

FPL RESPONSE:
As discussed in LRA Appendix B, Subsection 3.2.3 (page B-44), components and structural components constructed of cast iron, carbon steel, and low alloy steel are susceptible to loss of material and loss of mechanical closure integrity due to aggressive chemical attack. If insulated piping or electrical cable shows signs of boric acid leakage (e.g., boric acid residue), the source of the leakage is determined. The leakage is corrected or evaluated to ensure that the component intended function is maintained. FPL has implemented commitments related to NRC Generic Letter 88-05, "Boric Acid Corrosion of Carbon Steel Reactor Pressure Boundary Components in PWR Plants." A review of plant history shows that several minor boric acid leaks (e.g., valve packing leakage) have been identified and corrected through implementation of this program. None of the leaks identified have resulted in significant component/system degradation or loss of intended function due to boric acid corrosion.

RAI 3.9.3-4:
Provide details regarding the evaluation of a boric acid leakage discovery to include, but not limited to, specific evaluation criteria and the bases for such criteria.

FPL RESPONSE:
As stated in LRA Appendix B, Subsection 3.2.3 (page B-44), the program monitors the effects of boric acid corrosion by detection of coolant leakage as suggested by NRC Generic Letter 88-05, including guidelines for locating small leaks, conducting examinations and performing evaluations.

Procedural controls are utilized to ensure that boric acid leaks are identified, monitored, evaluated, and corrected before they cause significant damage. Leak evaluations are performed under the Corrective Action Program and generally consider the location of the leak, type of leak, leak characteristics (e.g., boric acid accumulation, steam leak, water leak, etc.), the component function in the system, other systems affected by the leak (due to degradation, damage, etc.), plant status and operability requirements, means of leak identification, leak monitoring, Technical Specification, FSAR, procedure requirements, and long term effects.

SECTION 3.9.4 CHEMISTRY CONTROL PROGRAM (LRA Section 3.2.4 of Appendix B)

RAI 3.9.4-1:
Identify guidelines and/or standards including revision numbers to which the Chemistry Control Program is implemented (i.e., EPRI reports TR-105714 and TR-102134, respectively). If deviations from the guidelines, then justify the differences. If alternate means of controlling water chemistry are utilized, describe major controlling parameters, their ranges, corresponding acceptance criteria and any corrective measures which have to be taken when these criteria are exceeded.

FPL RESPONSE:
As described in LRA Appendix B, Subsection 3.2.4 (page B-48), Chemistry Control Program, the parameters monitored by the Chemistry Control Program for the purposes of aging management are chloride, fluoride, sulfate, hydrogen, oxygen, biocide, corrosion inhibitor, and water content. With reference to the above parameters, the Chemistry Control Program currently complies with the following industry guidelines:

(a) EPRI, TR-105714, Rev. 4, "PWR Primary Water Chemistry Guidelines", Vols. 1 and 2.

(b) EPRI, TR-102134, Rev. 5, "PWR Secondary Water Chemistry Guidelines".

Additionally, the Chemistry Control Program considers equipment vendor specifications, information from water treatment experts and Turkey Point and industry operating experience.

RAI 3.9.4-2:
Describe the Chemistry Control Program as it relates to emergency diesel fuel oil. The description should include the actions taken to prevent ingress of water into the fuel oil system. Reference any relevant standards.

FPL RESPONSE:
Loss of material is an aging effect requiring management for Emergency Diesel Generator (EDG) fuel oil components. The Chemistry Control Program is credited for managing this aging effect by:

(a) Verification that fuel oil shipments are free from water and particulate contamination before the oil is transferred to the Diesel Oil Storage Tanks (DOSTs). This is accomplished by sampling and analyzing each fuel oil shipment in accordance with ASTM D4176 - "Clear and Bright Analysis". It is noted that Turkey Point only utilizes low sulfur fuel oil for the EDGs.

(b) Addition of stability and biocide agents to fuel oil shipments before the oil is transferred to the DOSTs.

(c) Sampling and analysis of stored fuel oil on a monthly basis for particulates in accordance with ASTM D2276 - Particulate Contamination in Aviation Turbine Fuels. If the particulate analysis approaches a significant fraction of the acceptance criteria, the fuel in the tank is filtered until the acceptance criteria is met followed by the addition of biocide as necessary.

In addition to the above, the DOSTs are checked for water and the water drained, as necessary, as part of the Periodic Surveillance and Preventive Maintenance Program.

RAI 3.9.4-3:
In the discussion of "Parameters Monitored or Inspected," the applicant specifies chemicals and water content as the parameters monitored. For microbiologically influenced corrosion (MIC), which is grouped under the aging effect of loss of material, in Appendix C, the applicant states for the purpose of aging management review, loss of material due to MIC is not considered significant at temperatures greater than 120°F or pH greater than 10. Given these parameters, provide a discussion of how the Chemistry Control Program, which does not appear to focus on these parameters, would adequately manage this aging effect.

FPL RESPONSE:
As described in LRA Appendix B, Subsection 3.2.4 (page B-47), the Chemistry Control Program is not credited to manage any aging effect by monitoring pH or temperature. However, system operating temperature was considered during the performance of aging management reviews due to its influence on susceptibility to certain aging mechanisms, such as stress corrosion cracking (SCC), microbiologically influenced corrosion (MIC), and thermal embrittlement. The operating temperature of a system is governed by the system process and the environment. No aging management programs are utilized to control system operating temperature.

Loss of material, and fouling due to MIC are managed by adding biocides, or crediting the presence of other controlled additives such as chromates and boron. There were no cases where pH was credited for precluding loss of material due to MIC.

RAI 3.9.4-4:
In the discussion on "Detection of Aging Effects," the applicant states the following aging mechanisms can be minimized or prevented by the Chemistry Control Program include general corrosion, pitting corrosion, crevice corrosion, microbiologically influenced corrosion, graphitic corrosion, stress corrosion cracking, intergranular attack, corrosion fouling, and fouling caused by microbiologically influenced corrosion. These mechanisms were grouped by the applicant into the following aging effects of concern (i.e., loss of material, cracking, and fouling). However, high concentrations of impurities at crevices and locations of stagnant flow conditions could cause localized loss of material by some of the identified aging mechanisms. Provide a discussion on verification of the effectiveness of the chemistry control program (e.g., use of a one-time inspection of select components and susceptible locations) to ensure that this aging effect is not occurring.

FPL RESPONSE:
During routine and corrective maintenance requiring equipment disassembly, internal surfaces of components are visually inspected for loss of material and other aging effects. If the results of the inspections indicate loss of material (other than light surface corrosion), cracking, or fouling, the condition is evaluated pursuant to the Corrective Action Program. The corrective action process includes cause determination and if the aging mechanism is not readily apparent, metallurgical analysis may be performed.

FPL materials experts are typically requested to support root cause analyses and to perform metallurgical analyses when necessary. FPL has a metallurgical laboratory and trained staff available for performing metallurgical analyses. The metallurgical analyses include the use of standard metallurgical laboratory techniques for the identification of aging mechanisms such as crevice and pitting corrosion. The results of these material evaluations are formally documented and issued as Metallurgical Laboratory Reports and are maintained in a computerized database. A review of approximately 100 Turkey Point Units 3 and 4 Metallurgical Laboratory Reports issued between 1986 and the present, associated with license renewal passive components, was performed to identify any material failures attributed to crevice corrosion. This review concluded that there have been no occurrences of crevice corrosion in treated water systems. Therefore, the effectiveness of the Chemistry Control Program has been verified.

3.9.9 FLOW-ACCELERATED CORROSION PROGRAM (LRA Section 3.2.9 of Appendix B)

RAI 3.9.9-1:
Describe in detail the flow accelerated corrosion (FAC) program in the Turkey Point plant. Specifically, provide the following information:

- List guidance and recommendations used in developing the program.

- Specify the methodology or methodologies used for predicting loss of materials from the components subjected to FAC. If a generic methodology (e.g. CHECWORKS program developed by EPRI) is used, provide the reference. However, if it is a plant-specific methodology developed by the applicant, describe the methodology in detail.

- What are the acceptance criteria for the maximum acceptable wall thinning in the components subjected to FAC? Specify these criteria and the codes upon which they are based.

FPL RESPONSE:

First Bullet:
The FAC program was originally developed utilizing available guidelines from the Electric Power Research Institute (EPRI) and the Nuclear Utility Management and Resource Council (NUMARC). The Turkey Point program was reviewed by the NRC staff in August of 1988 in support of NUREG-1344, "Erosion/Corrosion-Induced Pipe Wall Thinning in U.S. Nuclear Power Plants" and determined to meet the requirements for erosion/corrosion inspections. FPL later confirmed that the program satisfied the guidance of Generic Letter 89-08 via FPL letter to the NRC, L-89-265 dated July 21, 1989 and the NRC accepted FPL's FAC program by NRC letter to FPL dated October 20, 1989. The program has been regularly upgraded utilizing current consensus industry guidance, e.g., NSAC-202L-R2, "Recommendations for an Effective Flow-Accelerated Corrosion Program".

Second Bullet:
FPL currently utilizes CHECWORKS as the predictive plant model for components subjected to FAC.

Third Bullet:

As stated in LRA Appendix B, Subsection 3.2.9 (page B-60), Acceptance Criteria,

> "Inspection results are used to calculate the number of refueling or operating cycles remaining before the component reaches its minimum wall thickness. If calculations indicate that an area will reach its minimum allowable wall thickness before the next inspection interval, the component is repaired, replaced, or reevaluated."

Minimum allowable wall thickness is based on the ANSI B31.1 code and is determined as follows:

COMPONENT TYPE	MINIMUM WALL
Seismic/Safety Related	Calculated minimum wall
Balance of Plant (Hoop stress min. wall $\geq 0.5\ t_{nominal}$)	Hoop stress minimum wall thickness due to pressure
Balance of Plant (Hoop stress min. wall $< 0.5\ t_{nominal}$)	Use the largest of: 1. Hoop stress due to pressure 2. 30% of nominal thickness 3. 0.150" (large bore) or 0.100" (small bore)

RAI 3.9.9-2:
The description of the scope of the program mentioned "limited baseline inspection." Describe the nature of this inspection.

FPL RESPONSE:
LRA Appendix B, Subsection 3.2.9 (page B-59) referred to a limited baseline inspection that is performed when a large bore component (butt welded piping with a nominal diameter greater than 2 inches) is repaired or replaced. The inspection consists of a pre-service examination of the new material to determine initial wall thickness. This data permits determination of actual wear rates in the future.

RAI 3.9.9-3:
Susceptibility to FAC can be reduced by maintaining proper water chemistry. Describe how the secondary water chemistry (treat water-secondary) will be controlled in order to achieve optimum environment for the components subjected to FAC. List any relevant guidelines or standards used to achieve this goal.

FPL RESPONSE:
Ideally for FAC control, the secondary system would be operated under oxidizing conditions with an elevated pH. However, secondary water chemistry is selected for optimal corrosion protection of the steam generators. Cycle specific chemistry information is used as one of the inputs to the predictive plant (FAC) models and is appropriately considered in the FAC program.

RAI 3.9.9-4:
In the description of monitoring and trending activities in the program, it was indicated that in steam traps, in addition to material loss from the internal walls of piping due to FAC, material loss also occurred from the external walls due general corrosion. Both these material losses are measured by a volumetric examination performed on these lines. Explain how the loss of material from internal surfaces and from external surfaces can be determined by volumetric measurements performed on these lines when the volumetric examination technique can only give total material losses from the piping, equal to a sum of losses from internal and external surfaces.

FPL RESPONSE:
Steam trap lines are generally categorized as small bore piping, e.g., both butt-welded and socket welded piping with a nominal diameter of less than or equal to two inches. These lines are examined using either ultrasonic techniques or radiographic techniques to determine component wall thickness. The intent of the examination is to detect component wall loss that can result in loss of function. Whether the degradation has occurred internally, externally, or both, these volumetric examination techniques adequately determine loss of material, which is the aging effect requiring management.

RAI 3.9.9-5:
Describe the inspection program for the components subjected to FAC. The description should include the following:

- State methodology for selecting the components to be examined during a given outage.

- State the frequency of examination of individual components.

- Describe the techniques used for performing these examinations. i.e. ultrasonic, radiography, or visual examination. If ultrasonic examination is used, how is the wall thickness determined from the individual instrument readings.

FPL RESPONSE:
The methodology for selecting components to be examined during a given outage is based on the guidance contained in NSAC-202L-R2, "Recommendations for an Effective Flow-Accelerated Corrosion Program." Selection of components is based on:

- wear rankings from the predictive plant model,
- components identified by the predictive plant model as having a short remaining service life,
- industry experience,
- plant specific experience, and
- prior inspection results.

Reinspection frequency is based on the calculated remaining life for each component.

Inspections are performed by various non-destructive techniques including ultrasonic techniques, radiographic techniques, and visual techniques. When ultrasonic techniques are used, the calibrated instrument provides a direct "read out" of wall thickness.

RAI 3.9.9-6:
Were the replacements for the components damaged by FAC made using the same material or in some cases was a more FAC resistant material used? If change in material is used, explain how the FAC program is impacted.

FPL RESPONSE:
Component replacements may be either the same material (like-for-like replacement) or FAC-resistant material. Replacement material is determined on a case-by-case basis, however, replacement with FAC-resistant materials is desired. Replacement information, for example, material type and inservice date, are entered into the predictive plant (FAC) models. In addition, the plant design drawings are updated to indicate changes in piping material.

RAI 3.9.9-7:

In the attribute, "Operating Experience and Demonstration," the applicant stated that wall thinning problems have occurred. Provide more information on the operating experience related to the wall thinning observed in the components located in the main steam and turbine generators and feedwater and blowdown systems. Specifically:

- How many components experienced wall thinning beyond the acceptable level and needed replacement?
- Were there any leaks or pipe breaks in the components damaged by FAC? If such events have occurred describe them in detail.

FPL RESPONSE:

First Bullet:

Operating experience related to FAC-induced degradation is available from several sources including NRC, INPO, and the CHECWORKS Users Group. Specific to Turkey Point, there have been a small number of component replacements due to FAC-related issues in the portions of Main Steam, Turbine Generators, Feedwater, and Blowdown in the scope of license renewal.

These include:

Turkey Point Unit 3
The nozzle, elbow, and expander at the discharge from the 3A and 3B Feedwater Pumps.

Turkey Point Unit 4
Expanders/reducers associated with the feedwater regulating valves, and one pipe segment associated with the "B" train feedwater line in containment.

Second Bullet:

There have been no inservice failures of components due to FAC in the portions of the Main Steam, Turbine Generators, Feedwater, and Blowdown within the scope of license renewal. This plant specific experience demonstrates the effectiveness of Turkey Point's FAC program.

3.9.11 PERIODIC SURVEILLANCE AND PREVENTIVE MAINTENANCE PROGRAM (LRA Section 3.2.11 of Appendix B)

RAI 3.9.11-1:
In page B-67, yard structures are listed as one category of structures whose aging effects are managed by the Periodic Surveillance and Preventive Maintenance Program. However, this program was not included in the last column of Table 3.6-20 which identifies specific programs and activities for aging management of yard structures. Explain this discrepancy, or make appropriate modifications either to Table 3.6-20 or in the scope of the Periodic Surveillance and Preventive Maintenance Program.

FPL RESPONSE:
Yard Structures were inadvertently listed in LRA Appendix B, Subsection 3.2.11 (page B-67) for the Periodic Surveillance and Preventive Maintenance Program. The Periodic Surveillance and Preventive Maintenance Program description on page B-67 will be revised to remove "Yard Structures" from the list of structures.

RAI 3.9.11-2:
As indicated in the scope description, the Periodic Surveillance and Preventive Maintenance Program is credited for managing several aging effects including embrittlement of structures, systems, and components. However, the embrittlement effect to be managed by this program is not shown in tables related to Sections 3.3, 3.4 and 3.6.In addition, given that aging effects are detected by visual inspections, provide acceptance criteria on how embrittlement effects are managed and detected.

FPL RESPONSE:
As described in LRA Appendix C, Subsections 6.1.3.2, 6.2.3.2, 6.3.3.2, 7.1.3.2, 7.2.3.2, 7.3.3.2 and 7.4.3.2 (pages C-26, C-28, C-31, C-36, C-38, C-40 and C-42 respectively), cracking due to embrittlement is an aging effect requiring management for coated canvas and rubber in environments such as treated water, raw water, air/gas, etc. The Periodic Surveillance and Preventive Maintenance Program description in LRA Appendix B, Subsection 3.2.11 (page B-67) inadvertently listed embrittlement as an aging effect under "Scope", "Detection of Aging Effects" and "Operating Experience and Demonstration". Cracking is the aging effect resulting from embrittlement and is included in LRA Appendix B, Subsection 3.2.11. The components/commodity groups that require aging management for cracking due to embrittlement are listed in LRA Tables associated with Section 3.4 and include:

(a) Intake Cooling Water Pumps expansion joints (Table 3.4-1, pages 3.4-11 and 3.4-15).
(b) Normal Containment Cooling ductwork flexible connectors (Table 3.4-9, pages 3.4-51 and 3.4-54).
(c) EDG Air Intake and Exhaust System flexible couplings (Table 3.4-15, pages 3.4-78 and 3.4-79).
(d) EDG Air Start System flexible hose (Table 3.4-15, pages 3.4-80 and 3.4-82).

The Intake Cooling Water Pumps expansion joints are replaced per periodic preventive maintenance activities (PMs). Flexible connectors, couplings, and hoses are visually inspected for cracks during periodic PMs for the associated equipment and replaced as necessary.

RAI 3.9.11-3:
The submittal indicated that this program will be enhanced to address the scope of specific inspections and their documentation. As indicated in Section 16.2.11 of the updated FSAR Supplement in Appendix A, specific enhancements to the scope and documentation of some inspections performed under this program will be implemented prior to the end of the initial operating license terms for Turkey Point Units 3 and 4. Provide a description of the program enhancements sufficient to satisfy 10 CFR 54.21(a)(3).

FPL RESPONSE:
The enhancements to the Periodic Surveillance and Preventive Maintenance Program include the following:

(1) Maintenance procedures for selected Instrument Air (IA) components will include visual inspection of the adjacent internal portions of the piping and components for loss of material.

(2) Maintenance procedures for Chemical and Volume Control Charging pumps will be enhanced to include inspection of the block for cracking.

(3) 18 month Emergency Diesel Generator Preventative Maintenance will include visual inspection of internal surfaces of the inlet air filters and flexible couplings to the turbochargers for loss of material and cracking. Additionally, while the engines are in operation, the exhaust systems will be inspected for leaks.

(4) Maintenance procedures for the Reactor Coolant Pumps Oil Collection systems will be enhanced to include visual inspection criteria for loss of material.

(5) The surveillance procedures for the Emergency Containment Filters will be enhanced to include visual inspection criteria for filter housing internal and external surfaces for loss of material.

(6) Normal Containment Coolers preventive maintenance activity will include visual inspection of:

- Cooler housing internal and external surfaces for loss of material.
- Ductwork surfaces adjacent to cooler housing for internal and external loss of material.

- Flexible ductwork connectors external surfaces for cracking.
- Cooler headers and fins external surfaces for loss of material.

(7) Maintenance procedures for the Computer Room and Cable Spreading Room portions of Control Building Ventilation will include visual inspection of:

- Air handling units air boxes (coil housing) internal surfaces for loss of material.
- Air handling units headers, tubes, air box and fins external surfaces for loss of material.

(8) A new preventive maintenance activity will be created to perform roof systems seal inspections for the Emergency Diesel Generator Buildings, Control Building, Auxiliary Building, Turbine Building and Electrical Penetration rooms.

(9) Maintenance Procedure for flood protection stop log and penetration seal inspection will include visual inspection of:

- Selected wooden stop logs for deterioration or rot.
- Piping penetration seals in selected pipe trenches for flooding protection.

RAI 3.9.11-4:
Provide information to clarify the following:

- Since this is an existing program, describe how frequently the inspections were conducted. In addition, identify specific frequencies of component replacement.

- Describe acceptance criteria and guidelines, and identify documentation on implementation procedures for the inspections, refurbishments, and replacements.

- Show evidence regarding effectiveness of the program in the Operating Experience and Demonstration summary.

FPL RESPONSE:
The Periodic Surveillance and Preventive Maintenance (PM) Program currently includes inspection frequencies ranging from 2 months to 10 years depending upon the specific component and aging effect being managed and plant operating experience. Examples of inspections that are part of this program and their current frequencies are provided below:

- Inspection of Residual Heat Removal Sump Pumps (casings) for loss of material is performed on a 6 month frequency.
- Inspection of Reactor Coolant Pump Oil Collection tanks, valves and piping/fittings for loss of material is performed each refueling.
- Inspection of internal surfaces of Diesel Oil Storage Tanks for loss of material is performed on a 10 year frequency.

Examples of component replacements include the Intake Cooling Water pumps, discharge expansion joints, and check valves, which are scheduled for replacement with new or refurbished equipment on a current 42 month frequency. The frequency of this PM may be adjusted as necessary based on future plant-specific performance and/or industry experience.

Acceptance criteria are tailored to each individual inspection considering the aging effect being managed. For example:

- Inspections for loss of material provide guidance that require evaluation under the Corrective Action Program if there is evidence of loss of material beyond uniform light surface corrosion.
- Visually detectable cracking requires evaluation under the Corrective Action Program.

- Refurbishments and replacements are performed on a specified frequency based on plant experience and/or equipment supplier recommendations.

Inspection and surveillance procedures PMs contain requirements for documenting the results of the inspections.

The effectiveness of this program is demonstrated by the high level of system/equipment availability as documented via the Maintenance Rule Periodic Assessments. For example, there have been no functional failures of Intake Cooling Water system pumps, pump discharge check valves, or expansion joints since the inception of the replacement PM for these components.

3.9.12 REACTOR VESSEL HEAD ALLOY 600 PENETRATION INSPECTION PROGRAM (LRA Section 3.2.12 of Appendix B)

RAI 3.9.12-1:
NEI's integrated program for evaluating Alloy 600 VHPs in U.S. PWRs is based on the industry's generic and plant-specific responses to GL 97-01, "Degradation of Control Rod Drive Mechanism Nozzle and Other Vessel Closure Head Penetrations," and ranks the susceptibility of Alloy 600 VHPs to develop PWSCC based on probabilistic cracking models. The criteria for ranking the VHPs in the industry are based on establishing a benchmark probability that the control rod drive mechanism (CRDM) nozzles for a given facility would be equal to (normalized) the probability that a 75-percent throughwall crack would be detected and exist in the most PWSCC-degraded CRDM nozzle of the D.C. Cook Unit 2 facility relative to the time of the inspection of the VHPs at D.C. Cook Unit 2 facility in 1994. NEI's integrated program then ranks the CRDM nozzles according to the time that the benchmark probability of the nozzles for a given facility would be achieved relative to January 1, 1997. NEI normalized the CRDM nozzles in the U.S. industry into those predicted to achieve this probability within 5 years of January 1, 1997 (e.g., plants with nozzles that are considered to be highly susceptible to PWSCC - Tier 1 VHPs), those predicted to achieve this probability within 5-to-10 years of January 1, 1997 (e.g., plants with nozzles that are considered to be moderately susceptible to PWSCC - Tier 2 VHPs), and those predicted to achieve this probability within 15 or more years of January 1, 1997 (e.g., plants with nozzles that are considered to have a low susceptible to PWSCC - Tier 3 VHPs).

In its review of the NEI submittal of December 11, 1998, Turkey Point "Responses to the NRC Requests for Additional Information on Generic Letter 97-01," the NRC staff determined that the VHPs at Turkey Point Unit 4 were ranked as Tier 2 VHPs, and that the VHPs at Turkey Point Unit 3 were ranked as Tier 3 VHPs. Although the VHPs in the Turkey Point units were not selected as being those ranked and chosen for performing the integrated program's initial voluntary, volumetric inspections, FPL has modified the Alloy 600 program for the Turkey Point VHPs by committing to perform volumetric examinations of the VHPs in the Turkey Point Unit 4 RPV head. However, in Section 3.2.12, FPL did not identify if the normalized probability of cracking for the VHPs in the Turkey Point Unit 3 RPV head would achieve the equivalent ranking relative to the worst case nozzle at D.C. Cook Unit 2 within the proposed period of extended operation for the unit, and similarly did not identify when the normalized probability of cracking for the VHPs in the Turkey Point Unit 4 RPV head would

achieve the equivalent ranking relative within the Tier 2 timeframe (i.e., within 2002 to 2012). Therefore with respect to the program as described in Section 3.2.12 of the TP LRA, FPL needs to:

- Respond whether the VHPs of Turkey Point Unit 3 are predicted to achieve the same probability for having a 75% throughwall, PWSCC type flaw as those detected at D.C. Cook Unit 2 within the extended operating term for the unit. If the VHPs of Turkey Point Unit 3 are predicted to achieve the same probability for having a 75% throughwall, PWSCC type flaw as those detected at D.C. Cook Unit 2 within the extended operating term for the unit, state whether FPL intends to inspect the VHPs of Turkey Point Unit 3 before or during the extended operating term for the unit. If the VHPs of Turkey Point Unit 3 are predicted to achieve the same probability for having a 75% throughwall, PWSCC type flaw as those detected at D.C. Cook Unit 2 within the extended operating term for the unit, and FPL does not intend to commit to performing voluntary volumetric examinations of these VHPs, provide a technical basis for not examining them.

- Respond when the VHPs of Turkey Point Unit 4 are predicted to achieve the same probability for having a 75% throughwall, PWSCC type flaw as those detected at D.C. Cook Unit 2 and when the planned volumetric examinations of the VHPs at Turkey Point Unit 4 are expected to take place relative to this timeframe.

FPL RESPONSE:
Turkey Point Unit 3 is not predicted to achieve the same probability for having a 75% throughwall, primary water stres corrosion cracking (PWSCC) type flaw as those detected at D.C. Cook Unit 2 within the extended operating term for the unit. As a result, no inspection is planned at this time. The Turkey Point Unit 4 vessel head penetrations (VHPs) are predicted to achieve the same probability for having a 75% throughwall, PWSCC type flaw as those detected at D.C. Cook Unit 2 at approximately 10 EFPY from 1/1/97. The inspection will be performed prior to that date.

3.9.13 REACTOR VESSEL INTEGRITY PROGRAM (LRA Section 3.2.13 of Appendix B)

RAI 3.9.13-1:
Table 4.4-2 in Appendix A of the LRA provides the surveillance capsule withdrawal schedule for Turkey Point Units 3 and 4. In order to monitor changes in the reactor vessel material due to neutron irradiation during the license extension period, the current reactor vessel surveillance program, which was designed based on a 40-year license, must be modified to accommodate a 60-year license. Discuss how the reactor vessel surveillance program complies with the following criteria:

- The surveillance program must provide data at neutron fluences equal to or greater than the projected peak neutron fluence at the end of the period of extended operation.

- If the last capsule is withdrawn before the 55th year, the applicant must establish reactor vessel neutron environment conditions (fluence, spectrum, temperature, and neutron flux) applicable to the surveillance data and the pressure-temperature curves. If the plant operates outside the limits established by these conditions, the applicant must inform the NRC and determine the impact of the condition on RPV integrity.

If the last capsule is withdrawn before the 55th year, the applicant must install neutron dosimetry to permit tracking of the fluence to the RPV.

FPL RESPONSE:
The 48 EFPY peak neutron fluence (inside wall) for the Turkey Point circumferential welds is projected to be less than 4.5×10^{19} n/cm^2 which is equivalent to approximately 2.8×10^{19} n/cm^2 at the 1/4T location. The Turkey Point Unit 4 "X" capsule is currently projected to be removed in 2007 at a fluence of 3.85×10^{19} n/cm^2 which is greater than the 1/4T fluence at 48 EFPY.

There are nine remaining standby capsules in the Turkey Point vessels from which to gather data on fluence, spectrum, temperature, and neutron flux. The last capsule will not be withdrawn prior to the 55th year as shown in LRA Appendix A, Table 4.4-2 (page A-10).

RAI 3.9.13.2-1:
In Section 3.2.13.2, the applicant states that the pressure vessel fluence values are calculated in compliance with the requirements of draft guide (DG)-1053. The applicant also states that the calculations are verified using dosimetry results from the reactor vessel surveillance capsule removal and evaluation subprogram. Provide the database, the data processing (including computer codes) and the associated calculations which demonstrate adherence to the requirements of DG-1053.

FPL RESPONSE:
As submitted to NRC by FPL letter L-2000-146 dated July 7, 2000, and accepted by NRC Safety Evaluation dated October 30, 2000, the predicted fast neutron fluence values at the critical reactor vessel locations are based on methods consistent with Draft Regulatory Guide DG-1053. The determination of the fluence is based on both calculations and measurements. The fluence prediction is made with calculations, and measurements are used to qualify the calculational methodology.

Provided below is a summary of the database, data processing methods/codes and the calculations which demonstrate adherence to DG-1053:

Database

FPL has implemented a pressure vessel radiation surveillance program at Turkey Point. The program is based on ASTM E185. Eight materials test capsules were placed in each unit (16 total). Additionally, external neutron dosimeters have been installed and analyzed. The program entails the periodic removal of capsules and/or dosimeters for evaluation throughout the plant life. The present database at Turkey Point includes data evaluated from three Unit 3 capsules, two Unit 4 capsules, and cycle specific cavity dosimetry measurements during Unit 3 Cycles 10 and 15. The results from these measurements, the Units 3 and 4 operating histories, and calculated power distributions make up the database for the fluence calculations.

Data Processing

The most recent data calculations use DORT for the neutron transport calculation, a DORT post processor code named DOTSOR for geometry conversion, and Bugle-96, an ENDF-B-VI based cross-section library. The power distributions are based on the Westinghouse Advanced Nodal Code (ANC).

Calculations

The fluence calculation methods include the following:

a) The calculation uses detailed modeling of the capsules and cavity dosimeters that include significant structural and geometrical details necessary to define the neutron environment at points of interest.

b) The transport calculation for the reactor model was carried out in the R,θ and R,Z coordinates using DORT and BUGLE-96. The R,θ model included 152 mesh points in the R direction covering the range from the center of the core to about 14 cm into the concrete shield to account for back scatter. In the azimuthal direction, 47 mesh points were used which models an octant of the reactor.

c) The core power distribution used to determine the neutron source was calculated from ANC nodal calculations. The relative pin-by-pin distributions for each assembly location together with the cycle burnup for each assembly were used to determine the relative power output for each pin in the core, averaged over the cycle. The DOTSOR code was used to convert this power distribution from x,y to R,θ coordinates and to place the source in each mesh cell. The average assembly burnup was used to determine the source per group, the average neutrons per fission and the average energy per fission.

d) Neutron dosimetry analysis of the passive sensors within the surveillance capsule, which included activation measurement and evaluation of their composition and location, are also considered in the development of fluence results.

e) Calculation to measurement (C/M) comparisons indicated a C/M ratio greater than 1.0. The calculated values were used without modification, consistent with the recommendation of DG-1053.

f) Fluence projections use power distributions which are representative of planned future fuel management using flux suppression inserts in the assemblies at the core flats. Core designs are controlled by limiting the power in the peripheral assemblies at these locations.

3.9.14 STEAM GENERATOR INTEGRITY PROGRAM (LRA Section 3.2.14 of Appendix B)

RAI 3.9.14-1:
It is indicated in the scope of the LRA, that this AMP applies to steam generator secondary-side integrity inspections in addition to the inspection of tubes and plugs.

- Identify the steam generator internal components that are included in the program.

- Briefly describe the examinations performed on these internal components and identify whether they are examined in accordance with the program guidelines given in NEI 97-06 (Steam Generator Program Guidelines). If they are not examined in accordance with NEI 97-06, briefly describe how the examinations differ from those specified in NEI 97-06.

FPL RESPONSE:
As depicted in LRA Table 3.2-1 (page 3.2-85), the tubes and plugs are the only components crediting the Steam Generator Integrity Program (SGIP) for aging management. Aging effects requiring management for other secondary side components credit the Chemistry Control Program and the ASME Section XI Subsections IWB, IWC, and IWD Inservice Inspection Program.

It is noted that under the current licensing basis (CLB), steam generator internal components included in the SGIP were identified in FPL letter L-98-60 dated March 26, 1998 in response to NRC Generic Letter 97-06, "*Degradation of Steam Generator Internals*" and considered acceptable per NRC letter dated October 4, 1999, "Close Out of Generic Letter 97-06". The FPL CLB SGIP requires inspection of steam generator internal components in accordance with the guidance provided in NEI 97-06 and WCAP 15093 (*Evaluation of EDF Steam Generator Internals Degradation - Impact of Causal Factors on the Westinghouse Models F, 44F, D and E2 Steam Generators (Proprietary)*), transmitted to NRC by Westinghouse letter dated December 22, 1998.

RAI 3.9.14-2:
The steam generator integrity program is structured to meet NEI 97-06 and the plant's technical specifications. NEI 97-06 provides, among other items, guidance on the inspection and assessment of steam generator tube sleeves. Steam generator tube sleeves were not identified by the applicant in the scope of this AMP. Discuss why tube sleeves were not identified.

FPL RESPONSE:
There are no tube sleeves installed in the Turkey Point Steam Generators and the Turkey Point operating license does not authorize any approved tube sleeve designs for installation at this time. Therefore, tube sleeves were not addressed in the Turkey Point LRA.

RAI 3.9.14-3:
The submittal indicated that volumetric inspection techniques detect flaw size and depth, or alternatively, remaining sound wall thickness. No discussion is provided on the testing technique (e.g., eddy current testing) primarily utilized or the type of probes used for detecting different kinds of tube and plug degradation. Also, eddy current testing has been used in the industry to detect degradation of other internal components and the presence of loose parts. Provide a discussion on the above items as applied to tubes, plugs, internals and loose parts at Turkey Point. Indicate the standards and criteria to which these inspection techniques and personnel are qualified. Describe the inspection scope (location and probe types) used at Turkey Point.

FPL RESPONSE:
As depicted in LRA Table 3.2-1 (page 3.2-85), the tubes and plugs are the only components crediting the Steam Generator Integrity Program (SGIP) for aging management. Eddy Current Testing is utilized at Turkey Point. Bobbin and rotating Plus Point® eddy current probes are the primary type of probe used in the SGIP. Ultrasonic techniques have also been used to a limited extent to provide additional validation of analysis protocols. The scope of eddy current and visual inspections incorporate the guidance contained in NEI 97-06 and WCAP 15093, *Evaluation of EDF Steam Generator Internals Degradation - Impact of Causal Factors on the Westinghouse Models F, 44F, D and E2 Steam Generators* for detection of potential tube and plug degradation, and degradation of internal components and the presence of loose parts. Examination personnel are qualified in accordance with the standards and criteria provided in NEI 97-06. Examination techniques are qualified and validated for site specific use in accordance with the standards and criteria contained in NEI 97-06.

All hot and cold leg tube plugs are visually examined at each inspection for evidence of leakage. This is conservative compared to NEI 97-06 guidance, which requires sampling plugs (e.g., rolled mechanical plugs) with volumetric techniques such that 100% are sampled within 60 Effective Full Power Months (EFPM). This recommendation is based on field performance of Westinghouse Alloy 600 mechanical plugs that proved susceptible to PWSCC. All mechanical plugs installed at Turkey Point, however, are fabricated from Alloy 690 thermally treated material, which has not experienced any field failures due to cracking. The FPL approach provides greater coverage at each inspection, and is more likely to detect leakage (e.g., bypass leakage) that may be associated with Alloy 690 plugs.

RAI 3.9.14-4:
The submittal indicated that the acceptance criteria for identified primary-to-secondary operational leakage is compared with the limits allowed by the technical specifications. However, it is also stated that the steam generator integrity program is structured to meet NEI 97-06 which requires a lower operational leakage limit than that required by the Turkey Point technical specifications. Clarify which operational leakage limit is followed by the applicant. If the NEI 97-06 leakage limit is not followed, explain this deviation based on the applicant's stated intent to meet NEI 97-06, and the industry's determination that a lower leakage limit is more appropriate given industry experience.

FPL RESPONSE:
Turkey Point Plant procedures for off-normal conditions associated with primary-to-secondary steam generator tube leakage incorporate the operational leakage performance criterion provided in NEI 97-06. This criteria is more restrictive and thus bounds the Technical Specification primary to secondary leakage limits.

RAI 3.9.14-5:
Clarify how the confirmation process ensures that preventive actions are adequate and that appropriate corrective actions have been completed and are effective.

FPL RESPONSE:
The FPL Steam Generator Integrity Program ensures that preventative actions are adequate and that appropriate corrective actions have been completed and are effective by implementing the guidance provided in NEI 97-06. Specifically, a pre-outage degradation assessment is completed to ensure that inspection techniques are appropriate for the types of degradation expected. A condition monitoring assessment is completed at each inspection to verify that the tube integrity performance criteria of NEI 97-06 were maintained for the prior operating period. A failure to maintain the performance criteria would be addressed under the Turkey Point Corrective Action Program. An operational assessment is also completed after each inspection to provide reasonable assurance that the performance criteria will be maintained through the operating period until the next inspection.

3.9.16 THIMBLE TUBE INSPECTION PROGRAM (LRA Section 3.2.16 of Appendix B)

RAI 3.9.16-1:
The submittal indicated that the Thimble Tube Inspection Program is an existing program which consists of conducting an eddy current test inspection on one thimble tube (#N-05 in Unit 3) in accordance with plant procedures. Identify documentation and provide a description of the plant procedures related to thimble tube inspection. In addition, according to Section 16.2.16 of the updated FSAR Supplement in Appendix A, the Thimble Tube Inspection Program currently requires only an one-time inspection on a single tube (#N-05 in Unit 3) prior to the end of the initial operating license term for Turkey Point Unit 3, and the data of this inspection will be evaluated to determine the need for additional inspections. Due to potential uncertainties in wear rate, provide justification of the adequacy of a single tube inspection. In addition, provide criteria that will be used to determine the scope of additional tests, if necessary.

FPL RESPONSE:
The procedures for the performance of thimble tube eddy current testing (ECT) were created and used satisfactorily for the determination of thimble tube wall thinning in response to NRC Bulletin No. 88-09 "Thimble Tube Thinning in Westinghouse Reactors". These procedures consist of a plant procedure and a nondestructive examination (NDE) department procedure. The plant procedure specifies all plant associated requirements, precautions and limitations for performing the thimble tube ECT, including acceptance criteria and FPL Corrective Action Program requirements. The NDE procedure, which is specific for the thimble tubes, provides all technical requirements for performing the thimble tubes ECT, including the level of qualification of examination personnel and of others involved in the selection and calibrations of equipment to be used.

Based on the conservative calculations performed (see response to RAI 4.7.1-1), the Unit 3 thimble tube at location N-05 was determined to be the worst case concerning wall thinning rate. The calculated remaining life for Unit 3 thimble tube N-05 was determined to be approximately half the life of the thimble tube with the next highest wall thinning rate. Based on the considerable margin on the calculated remaining life of all the other thimble tubes tested when compared with the calculated remaining life of the Unit 3 thimble tube N-05, it is reasonable to conclude that the results of ECT on the Unit 3 N-05 thimble tube can be used to predict the acceptance of the other thimble tubes.

The criteria for determining the scope of additional tests have not yet been established. However, for determining the need for additional ECT on other thimble tubes, consideration will be given to a major reduction on the predicted life of the Unit 3 thimble tube N-05 when using the test results to recalculate the remaining life of this thimble tube. Based on the results of the ECT on the Unit 3 thimble tube N-05, ECT may be performed on other thimble tubes that were previously tested and identified with high wall thinning rates. The selection of these tubes will depend on the re-calculated remaining life of these tubes.

RAI 3.9.16-2:
Can a thimble tube be isolated from coolant leak? Describe the corrective actions mentioned in page B-88 if a tube leak does occur.

FPL RESPONSE:
Manually operated isolation valves are provided for isolating thimble tubes. These valves may be closed after removal of the detector cable assembly.

If a thimble tube leak does occur, the affected unit would be shutdown in accordance with Technical Specification requirements. Repairs and subsequent testing would then be performed in accordance with the Corrective Action Program.

TIME LIMITED AGING ANALYSES

4.2 REACTOR VESSEL IRRADIATION EMBRITTLEMENT

4.2.1 PRESSURIZED THERMAL SHOCK

RAI 4.2.1-1:
Section 4.2.1 of the LRA provides the calculated RT_{PTS} values at 48 effective full power years (EFPY) for Turkey Point Units 3 and 4. The RT_{PTS} value for the circumferential welds in both units is 297.4°F. The LRA did not provide a) the 48 EFPY fluence, b) the weld chemistry, or c) the analysis in accordance with 10 CFR 50.61 (c) (1) and (2) that resulted in the RT_{PTS} value. Provide items a) through c) and the impact of the Charpy data from the integrated Turkey Point Units 3 and 4 surveillance program on the assessment. Include a comparison of the chemistry factor calculated from the 10 CFR 50.61 Tables to the Chemistry Factor calculated from surveillance data and the appropriate Margin terms in order to demonstrate that the RT_{PTS} value is conservative.

FPL RESPONSE:
The 48 EFPY Fluence projections for the SA-1101 material circumferential welds for each reactor vessel are:

TURKEY POINT 3 4.12×10^{19} N/cm^2

TURKEY POINT 4 4.07×10^{19} N/cm^2

For conservatism, a value of 4.5×10^{19} N/cm^2 was used in the Pressurized Thermal Shock (PTS) analysis.

The weld materials of construction in the beltline area are as follows:

Unit	Circumferential Weld Material Chemistry	
	%Cu	%Ni
Unit 3	0.23	0.59
Unit 4	0.23	0.59

Note: The chemistry for the welds is "best estimate" from BAW 2325, which was accepted by NRC in the Reactor Vessel Integrity Database (RVID).

The RT_{PTS} values for the circumferential welds of the Turkey Point Units 3 and 4 reactor vessels were calculated in accordance with

10 CFR 50.61. All calculations address the 48 EFPY fluence projections identified above and Adjusted Reference Temperature (ART). The calculations show that the RT_{PTS} values for 48 EFPY are below the screening criteria of 300^0 F for circumferential welds.

Provided below is a summary of the analysis including assumptions, calculational methods, and results:

Assumptions

As noted above, a conservative bounding value for fluence was used for all calculations.

Calculational Methods

Calculation equations utilized for determining limiting RT_{PTS} (ART at 48 EFPY), ΔRT_{NDT}, fluence factor and margin are per 10 CFR 50.61.

Results

A summary of the 48 EFPY RT_{PTS} analysis is provided below.

Unit	Circumferential Weld Material	Inner Surface Fluence x 10^{19} N/cm^2	Initial RT_{NDT} °F	Margin[1] °F	Chemistry Factor[1] (CF)	Inside Surface fluence factor[1] (ff)	ff x CF	RT_{PTS} °F
Unit 3	SA1101	4.5	10	56	167.55	1.38	231.4	297.4
Unit 4	SA1101	4.5	10	56	167.55	1.38	231.4	297.4

Notes: (1) Reference - 10 CFR 50.61.

Chemistry Factor:

10 CFR 50.61 does not require comparison of the chemistry factor calculated from the 10 CFR 50.61 Tables to the chemistry factor calculated from surveillance data using the appropriate margin terms. FPL's credibility determination was submitted to NRC in its last pressure temperature limit curve license amendment by FPL letter L-2000-146 dated July 7, 2000 and was accepted by NRC staff in its safety evaluation dated October 30, 2000. The NRC staff in its evaluation of the surveillance data for the circumferential weld, concurred with FPL's evaluation that the surveillance data does not meet the credibility requirements of Regulatory Guide 1.99, Revision 2. Consequently, the conservative values required by 10 CFR 50.61 for chemistry factor and margin were used.

4.2.2 UPPER SHELF ENERGY

RAI 4.2.2-1:
In section 4.2.2 of the LRA, the applicant cites reference 4.2-4, "BAW-2312, "Low Upper-Shelf Toughness Fracture Mechanics Analysis of Reactor Vessels of Turkey Point Units 3 and 4 for Extended Life Through 48 Effective Full Power Years, B&W, November 1997" as a basis for extending their upper-shelf energy (USE) equivalent margins analysis (EMA) into the period of extended operation. The applicant also stated that Appendix K of ASME Section XI was used to demonstrate a continued, acceptable EMA. The staff was unable to find BAW-2312 document on the NRC docket. Since the LRA does not give sufficient detail of how the EMA was extended, provide BAW-2312, and a summary of the methodology used to extend the applicability of the EMA. In addition, evaluate the impact of the Charpy data from the integrated (Turkey Point Units 3 and 4) surveillance program on the assessment.

FPL RESPONSE:
Attached are five copies of BAW-2312, Revision 1, "Low Upper-Shelf Toughness Fracture Mechanics Analysis of Reactor Vessels of Turkey Point Units 3 and 4 for Extended Life Through 48 Effective Full Power Years," B&W, December 2000 for review. This document reflects the latest NRC endorsed edition of ASME Code Section XI as required by 10 CFR 50 Appendix G.

The analytical methodology employed utilizes the acceptance criteria and evaluation procedures of ASME Section XI, Appendix K, 1995 edition with addenda through 1996. A detailed description of the methodology is provided in Section 4 of BAW-2312, Revision 1.

Charpy test data from previous surveillance capsules containing circumferential weld metal (Capsule T from Unit 4 and Capsule V from Unit 3) revealed that the upper shelf toughness values of the weld material was below 50 ft.-lbs. Since the material data in the analyses are based on conservative predicted values of fluence and material chemistry, there is no impact of the integrated surveillance program on the Upper Shelf Energy assessment.

4.3.2 REACTOR VESSEL UNDERCLAD CRACKING

RAI 4.3.2-1:
Section 4.3.2 of the Turkey Point LRA, indicates that a generic evaluation of underclad cracks had been extended to 60 years using fracture mechanics evaluations based on a representative set of design transients with the occurrences extrapolated to cover 60 years of service.

If the evaluation has been previously submitted for staff review, identify the report and the staff safety evaluation.

If the evaluation has not been submitted for staff review, provide the analysis.

Compare the transients in the 60-year generic evaluation to the Turkey Point design transients and explain why the crack growth projected in the 60-year generic evaluation will bound the crack growth projected for Turkey Point in 60 years of operation.

FPL RESPONSE:
WCAP-15338, "A Review of Cracking Associated with Weld Deposited Cladding in Operating PWR Plants," has been submitted to NRC via WOG letter OG-01-018, March 1, 2001. The letter requests "review and acceptance for referencing in licensing actions" and specifically references FPL RAI 4.3.2-1 as the initial use for the report.

A comparison of the design cycles and frequencies assumed in this report to the Turkey Point Units 3 and 4 specific design cycles and frequencies was performed. Based upon this comparison, the analysis bounds the Turkey Point Unit 3 and 4 design transients identified in UFSAR Table 4.1-8 and provided in Appendix A (page A-6) of the LRA. The analysis in WCAP-15338 conservatively assumes a 50% increase in the number of design cycles over a 60-year operating period and demonstrates insignificant flaw growth. As discussed in Section 4.3, "Metal Fatigue" of the LRA, a review of Turkey Point plant operating experience has shown that the existing 40 year design cycles and cycle frequencies are bounding and conservative for the period of extended operation. For License Renewal, continuation of the Turkey Point Fatigue Monitoring Program (described in Appendix B, Section 3.2.7 of the LRA) into the period of extended operation will assure the design cycle limits are not exceeded. The Fatigue Monitoring Program is considered a confirmatory program.

4.7.1 BOTTOM MOUNTED INSTRUMENTATION THIMBLE TUBE WEAR

RAI 4.7.1-1:
The submittal indicated that, in response to NRC Bulletin 88-09, eddy current test inspections of thimble tubes in Units 3 and 4 were conducted in the early 90's, and tube wall wear rates were established in both units. Based on these wear rates and the time-limited aging analysis (TLAA) results, only a single tube (#N-05 in Unit 3) will require inspection for the extended operation. Identify the wear rates and describe the TLAA processes and results, including assumptions used and analysis results to justify that the acceptance criterion of 70% wall loss are met for extended operation of all thimble tubes except the tube #N-05 in Unit 3. Note that the wear rate may increase with time when flow-induced thimble tube vibrations become more severe due to increased wear. TLAA based on previous inspection results obtained in early 1990's may not be realistic without verification. Confirm that an evaluation was performed in the TLAA to ensure adequate coverage of potential uncertainties in wear rates.

FPL RESPONSE:
The methodology used to determine wear rate and time to predicted wall thickness are based on predictive models and calculations developed by the Westinghouse Owners Group (WOG) program on Bottom Mounted Thimble Tubes. As part of this effort, a determination of maximum "safe" allowable wall-loss was made.

The exponent used for the wear rate curve to calculate the number of years to 70% through wall is 0.67. Information from the WOG program demonstrated that actual thimble tube wall loss closely resembled an exponentially decreasing curve. This number is conservative and is based on a Westinghouse recommendation for use when two consecutive data points were not available. Turkey Point did perform two inspections on each unit, but there was no indication of measurable wear. Therefore, 0.67 was used for conservatism.

Assumptions:

- Wall loss of up to 80% is acceptable (70% was used).
- Eddy current testing is considered accurate to a ±10% margin.
- Wear rate follows a decreasing exponential curve.
- Each thimble tube has a unique wear rate.
- Only thimble tubes with greater than 23% wall reduction need be considered.
- No wear is assumed for other than full power operation.

Based on the above assumptions, the following equation was utilized to determine the number of years to reach 70% through wall on any tubes currently with greater than 23% through wall.

$$W_a = W_d \left(\frac{N_a}{N_d} \right)^{\eta}$$

Where N_a = Accumulated time at which wear depth is to be calculated
N_d = operating time accumulated before inspection
W_a = percent wear depth at time N_a(70 %)
W_d = percent wear depth at time of inspection
η = exponent defining the shape of the wear curve, (conservatively used 0.67)

Based on the conservative calculations performed on each of the tubes with greater than 23% through wall, the Unit 3 thimble tube at location N-05 was determined to be the worst case regarding wall thinning rate (i.e., shortest remaining time to reach 70% through wall). The tube with the next shortest remaining time was nearly twice the remaining time of tube N-05.

The considerable margin surrounding the calculated remaining life of all the other thimble tubes tested, when compared with the remaining life of the Unit 3 thimble tube N-05, makes it reasonable to assume that the results of ECT on the Unit 3 N-05 thimble tube can be used to predict the acceptance of the other thimble tubes.

BAW-2312, Revision 1
December 2000

LOW UPPER-SHELF TOUGHNESS FRACTURE MECHANICS ANALYSIS OF REACTOR VESSELS OF TURKEY POINT UNITS 3 AND 4 FOR EXTENDED LIFE THROUGH 48 EFFECTIVE FULL POWER YEARS

FRAMATOME ANP

BAW-2312, Rev. 1
December 2000

LOW UPPER-SHELF TOUGHNESS FRACTURE MECHANICS ANALYSIS OF REACTOR VESSELS OF TURKEY POINT UNITS 3 AND 4 FOR EXTENDED LIFE THROUGH 48 EFFECTIVE FULL POWER YEARS

Prepared by

D. E. Killian

FTI Document No. 77-2312-01

Framatome Technologies, Inc.
3315 Old Forest Road
P. O. Box 10935
Lynchburg, VA 24506-0935

LOW UPPER-SHELF TOUGHNESS
FRACTURE MECHANICS ANALYSIS
OF REACTOR VESSELS OF
TURKEY POINT UNITS 3 AND 4
FOR EXTENDED LIFE THROUGH
48 EFFECTIVE FULL POWER YEARS

BAW-2312, Rev. 1
FTI Document No. 77-2312-01

Prepared for
Florida Power & Light Company

by
Framatome Technologies, Inc.
Lynchburg, Virginia

This report is an accurate description of the low upper-shelf toughness fracture mechanics analysis performed for the reactor vessels at Turkey Point Units 3 and 4.

12/18/00

D. E. Killian, Principal Engineer — Date
Materials and Structural Analysis Unit

This report has been reviewed and found to be an accurate description of the low upper-shelf toughness fracture mechanics analysis performed for the reactor vessels at Turkey Point Units 3 and 4.

12/18/00

K. K. Yoon, Technical Consultant — Date
Materials and Structural Analysis Unit

Verification of independent review.

12/18/00

A. D. McKim, Manager — Date
Materials and Structural Analysis Unit

This report is approved for release.

12/18/00

M. J. DeVan, Project Manager — Date
Materials and Structural Analysis Unit

EXECUTIVE SUMMARY

Since it has been projected that the upper-shelf Charpy energy levels of reactor vessel beltine weld materials at Turkey Point Units 3 and 4 may be less than 50 ft-lb at 48 effective full power years of service, a low upper-shelf fracture mechanics evaluation is required to demonstrate that sufficient margins of safety against fracture remain to satisfy the requirements of Appendix G to 10 CFR Part 50.

A low upper-shelf fracture mechanics analysis has been performed to evaluate the SA-1101 circumferential reactor vessel welds at Turkey Point Units 3 and 4 for ASME Levels A, B, C, and D Service Loadings, based on the evaluation acceptance criteria of the ASME Code, Section XI, Appendix K.

The analysis presented in this report demonstrates that the limiting reactor vessel beltline welds at Turkey Point Unit 3 and 4 satisfy the ASME Code requirements of Appendix K for ductile flaw extensions and tensile stability using projected low upper-shelf Charpy impact energy levels for the weld material at 48 effective full power years of plant operation.

RECORD OF REVISIONS

Revision	Affected Pages	Description	Date
0	All	Original release	11/97
1	All	Updated analysis to conform to the 1995 Edition of Appendix K to Section XI of the ASME Code, with addenda through 1996.	12/00

CONTENTS

Section	Heading	Page
1.	Introduction	1-1
2.	Acceptance Criteria	2-1
	2.1 Levels A and B Service Loadings (K-2200)	2-1
	2.2 Level C Service Loadings (K-2300)	2-2
	2.3 Level D Service Loadings (K-2400)	2-2
3.	Material Properties and Reactor Vessel Design Data	3-1
	3.1 J-Integral Resistance Model for Mn-Mo-Ni/Linde 80 Welds	3-1
	3.2 Material Properties for Weld Material	3-2
	3.3 Reactor Vessel Design Data	3-3
	3.4 J-Integral Resistance for SA-1101 Weld Material	3-3
4.	Analytical Methodology	4-1
	4.1 Procedure for Evaluating Levels A and B Service Loadings	4-1
	4.2 Procedure for Evaluating Levels C and D Service Loadings	4-4
	4.3 Temperature Range for Upper-Shelf Fracture Toughness Evaluations	4-4
	4.4 Effect of Cladding Material	4-5
5.	Applied Loads	5-1
	5.1 Levels A and B Service Loadings	5-1
	5.2 Levels C and D Service Loadings	5-1
6.	Evaluation for Levels A and B Service Loadings	6-1
7.	Evaluation for Levels C and D Service Loadings	7-1
8.	Summary of Results	8-1
9.	Conclusion	9-1
10.	References	10-1

LIST OF TABLES

Page

Table 3-1 Mechanical Properties for Beltline Materials 3-2

Table 6-1 Flaw Evaluation for Levels A and B Service Loadings 6-2

Table 6-2 J-Integral vs. Flaw Extension for Levels A and B Service Loadings 6-3

Table 6-3 J-R Curves for Evaluation of Levels A and B Service Loadings 6-4

Table 7-1 K_I vs. Crack Tip Temperature for SLB 7-4

Table 7-2 K_{Ic} at $^1/_{10}$ Wall Thickness 7-5

Table 7-3 K_{Jc} at $^1/_{10}$ Wall Thickness with $\Delta a = 0.10$ in. 7-6

Table 7-4 J-Integral vs. Flaw Extension for Levels C and D Service Loadings 7-7

Table 7-5 J-R Curves for Evaluation of Levels C and D Service Loadings 7-8

LIST OF FIGURES

Page

Figure 1-1 Reactor Vessel Beltine Materials for Turkey Point Unit 3 1-2

Figure 1-2 Reactor Vessel Beltine Materials for Turkey Point Unit 4 1-3

Figure 2-1 Reactor Vessel Beltline Region with Postulated Longitudinal Flaw 2-3

Figure 2-2 Reactor Vessel Beltline Region with Postulated Circumferential Flaw 2-4

Figure 5-1 Turkey Point Steam Line Break without Offsite Power Transient 5-2

Figure 6-1 J-Integral vs. Flaw Extension for Levels A and B Service Loadings 6-5

Figure 7-1 K_I vs. Crack Tip Temperature for SLB 7-9

Figure 7-2 J-Integral vs. Flaw Extension for Levels C and D Service Loadings 7-10

1. Introduction

One consideration for extending the operational life of reactor vessels beyond their original licensing period is the degradation of upper-shelf Charpy impact energy levels in reactor vessel materials due to neutron radiation. Appendix G to 10 CFR Part 50, "Domestic Licensing of Production and Utilization Facilities," states in Paragraph IV.A.1.a that, "Reactor vessel beltline materials must have Charpy upper-shelf energy ... of no less than 75 ft-lb initially and must maintain Charpy upper-shelf energy throughout the life of the vessel of no less than 50 ft-lb, unless it is demonstrated in a manner approved by the Director, Office of Nuclear Reactor Regulation, that lower values of Charpy upper-shelf energy will provide margins of safety against fracture equivalent to those required by Appendix G of Section XI of the ASME Code." Materials with Charpy upper-shelf energy below 50 ft-lbs are said to have low upper-shelf (LUS) fracture toughness. Fracture mechanics analysis is necessary to satisfy the requirements of Appendix G to 10 CFR Part 50 for reactor vessel materials with upper-shelf Charpy impact energy levels that have dropped, or that are predicted to drop, below the 50 ft-lb requirement.

The base metal and weld materials used in the beltline regions of the Turkey Point Units 3 and 4 reactor vessels are identified in Figures 1-1 and 1-2, respectively. Since it has been projected that the upper-shelf Charpy energy levels of the beltine weld materials may be less than 50 ft-lb at 48 effective full power years (EFPY's) of service, a low upper-shelf fracture mechanics evaluation has been performed to satisfy the requirements of Appendix G to 10 CFR Part 50. A similar analysis is not required for the reactor vessel beltline forging materials since all applicable materials are predicted to have upper-shelf Charpy energy levels in excess of 50 ft-lb at 48 EFPY.

The present analysis addresses ASME Levels A, B, C, and D Service Loadings. For Levels A and B Service Loadings, the low upper-shelf fracture mechanics evaluation is performed according to the acceptance criteria and evaluation procedures contained in Appendix K to Section XI of the ASME Code [1]. The evaluation also utilizes the acceptance criteria and evaluation procedures prescribed in Appendix K for Levels C and D Service Loadings. Levels C and D Service Loadings are evaluated using the one-dimensional, finite element, thermal and stress models and linear elastic fracture mechanics methodology of Framatome Technologies' PCRIT computer code to determine stress intensity factors for a worst case pressurized thermal shock transient.

Revision 1 of this document incorporates changes necessary to satisfy the requirements of the 1995 Edition of Appendix K to Section XI of the ASME Code, with addenda through 1996. This version of the Code includes changes to the thermal stress intensity factor equations for Levels A and B Service Loadings (Article K-4210), and the addition of evaluation procedures for Levels C and D Service Loadings (Article K-5000).

Figure 1-1 Reactor Vessel Beltine Materials for Turkey Point Unit 3

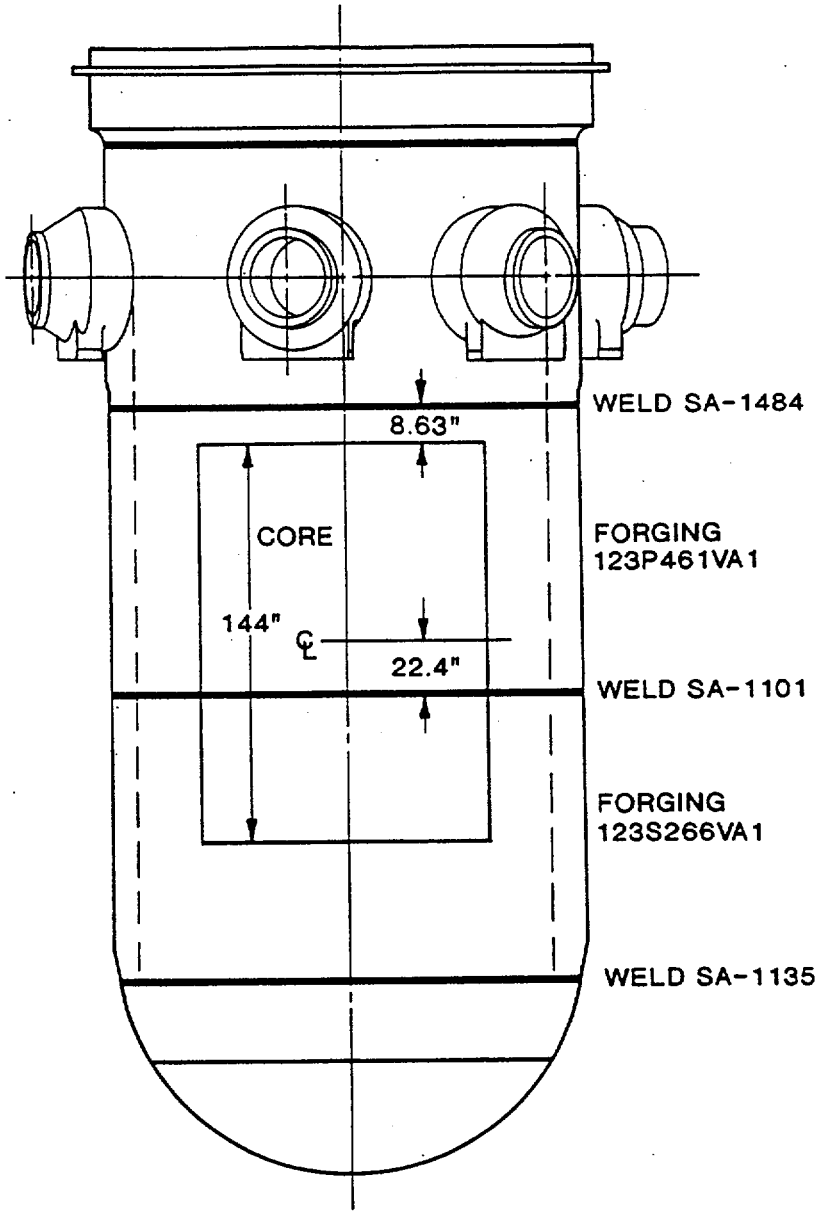

Figure 1-2 Reactor Vessel Beltine Materials for Turkey Point Unit 4

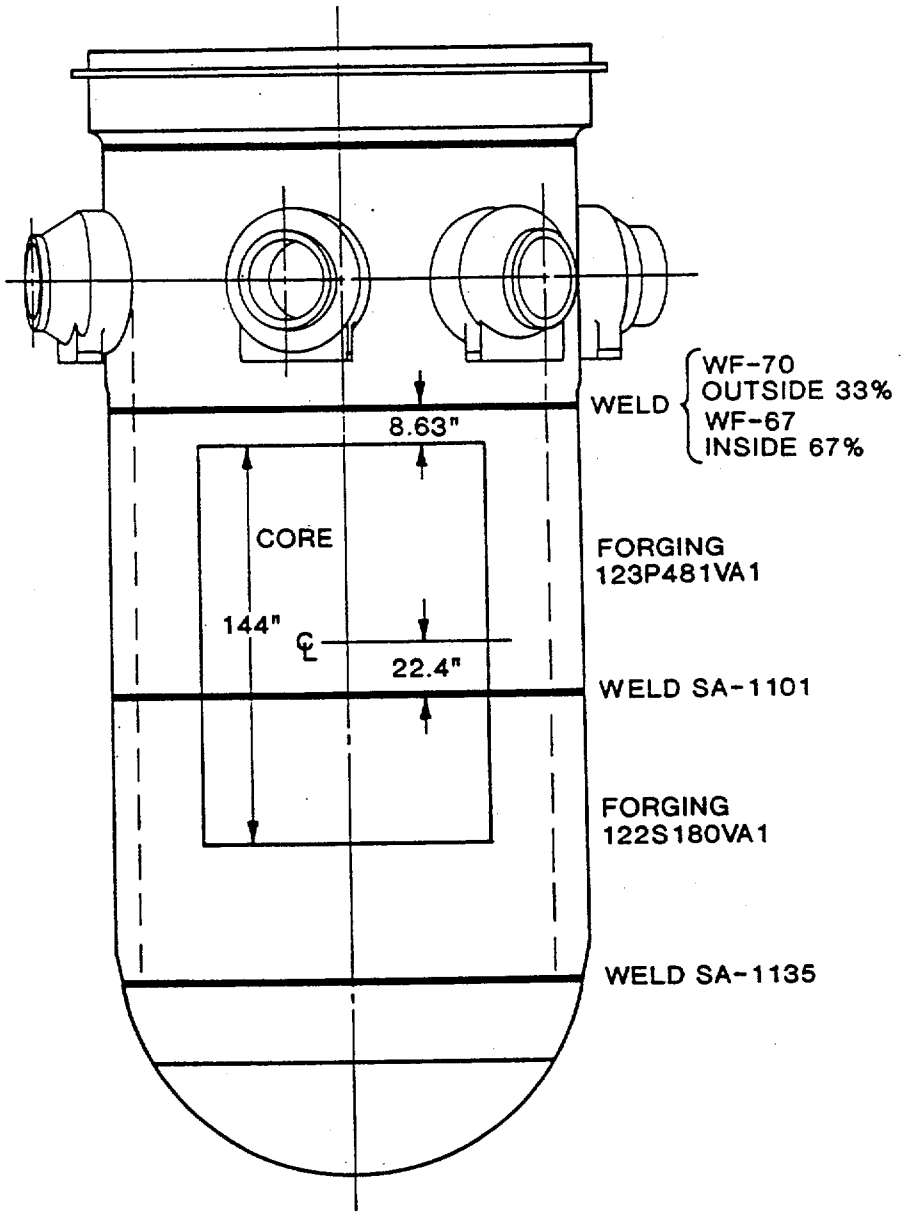

2. Acceptance Criteria

Appendix G to Section XI of the ASME Code [1] provides analytical procedures for the prevention of non-ductile fracture in those areas of the pressure boundary that are comprised of materials with upper-shelf Charpy energy levels of at least 50 ft-lbs. These procedures utilize transition range fracture toughness curves with a fluence-based adjustment to crack tip temperature, and require that the component be operated at a sufficiently low pressure so as to preclude non-ductile failure. These same procedures, however, make no allowance when crack-tip temperatures are maintained above the transition range between cleavage and ductile type failures, where ductile tearing is the predicted mode of failure for ferritic reactor vessel materials. Accordingly, additional evaluation procedures were developed that utilize elastic-plastic fracture mechanics methodology and the concept of J-integral controlled crack growth. Added to Section XI of the ASME Code as Appendix K, these new analytical guidelines may be applied when crack tip temperatures are in the upper-shelf temperature region.

Acceptance criteria for the assessment of reactor vessels with low upper shelf Charpy energy levels are prescribed in Article K-2000 of Appendix K to Section XI of the ASME Code [1]. These criteria, which apply to both longitudinal and circumferential flaws, as depicted in Figures 2-1 and 2-2, respectively, are summarized below as they pertain to the evaluation of reactor vessel weld metals.

2.1 Levels A and B Service Loadings (K-2200)

(a) When evaluating adequacy of the upper shelf toughness for the weld material for Levels A and B Service Loadings, an interior semi-elliptical surface flaw with a depth one-quarter of the wall thickness and a length six times the depth shall be postulated, with the flaw's major axis oriented along the weld of concern and the flaw plane oriented in the radial direction. Two criteria shall be satisfied:

(1) The applied J-integral evaluated at a pressure 1.15 times the accumulation pressure (P_a) as defined in the plant specific Overpressure Protection Report, with a factor of safety of 1.0 on thermal loading for the plant specific heatup and cooldown conditions, shall be less than the J-integral of the material at a ductile flaw extension of 0.10 in.

(2) Flaw extensions at pressures up to 1.25 times the accumulation pressure (P_a) shall be ductile and stable, using a factor of safety of 1.0 on thermal loading for the plant specific heatup and cooldown conditions.

(b) The J-integral resistance versus flaw extension curve shall be a conservative representation for the vessel material under evaluation.

2.2 Level C Service Loadings (K-2300)

(a) When evaluating the adequacy of the upper shelf toughness for the weld material for Level C Service Loadings, interior semi-elliptical surface flaws with depths up to one-tenth of the base metal wall thickness, plus the cladding thickness, with total depths not exceeding 1.0 in., and a surface length six times the depth, shall be postulated, with the flaw's major axis oriented along the weld of concern, and the flaw plane oriented in the radial direction. Flaws of various depths, ranging up to the maximum postulated depth, shall be analyzed to determine the most limiting flaw depth. Two criteria shall be satisfied:

(1) The applied J-integral shall be less than the J-integral of the material at a ductile flaw extension of 0.10 in., using a factor of safety of 1.0 on loading.

(2) Flaw extensions shall be ductile and stable, using a factor of safety of 1.0 on loading.

(b) The J-integral resistance versus flaw extension curve shall be a conservative representation for the vessel material under evaluation.

2.3 Level D Service Loadings (K-2400)

(a) When evaluating adequacy of the upper shelf toughness for Level D Service Loadings, flaws as specified for Level C Service Loadings shall be postulated, and toughness properties for the corresponding orientation shall be used. Flaws of various depths, ranging up to the maximum postulated depth, shall be analyzed to determine the most limiting flaw depth. Flaw extensions shall be ductile and stable, using a factor of safety of 1.0 on loading.

(b) The J-integral resistance versus flaw extension curve shall be a best estimate representation for the vessel material under evaluation.

(c) The extent of stable flaw extension shall be less than or equal to 75% of the vessel wall thickness, and the remaining ligament shall not be subject to tensile instability.

Figure 2-1 Reactor Vessel Beltline Region with Postulated Longitudinal Flaw

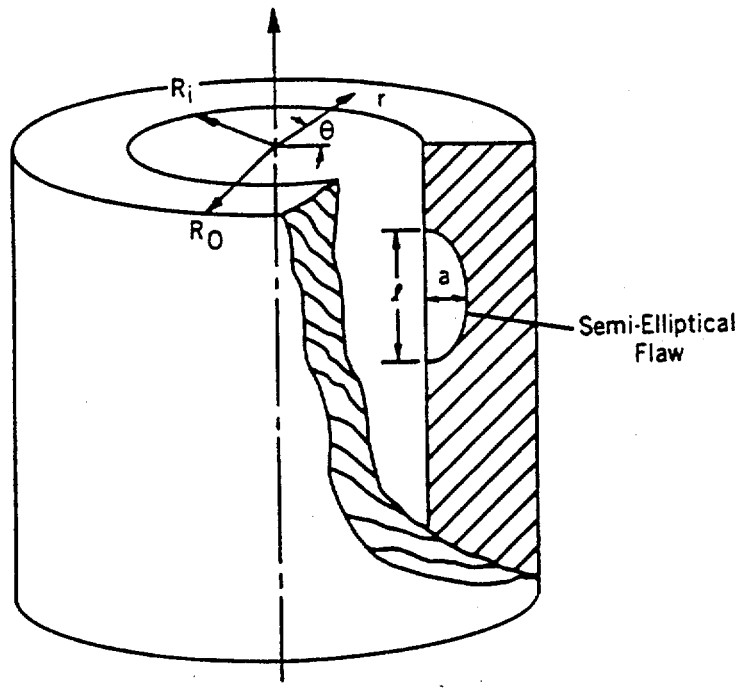

(Not to scale:)

Figure 2-2 Reactor Vessel Beltline Region with Postulated Circumferential Flaw

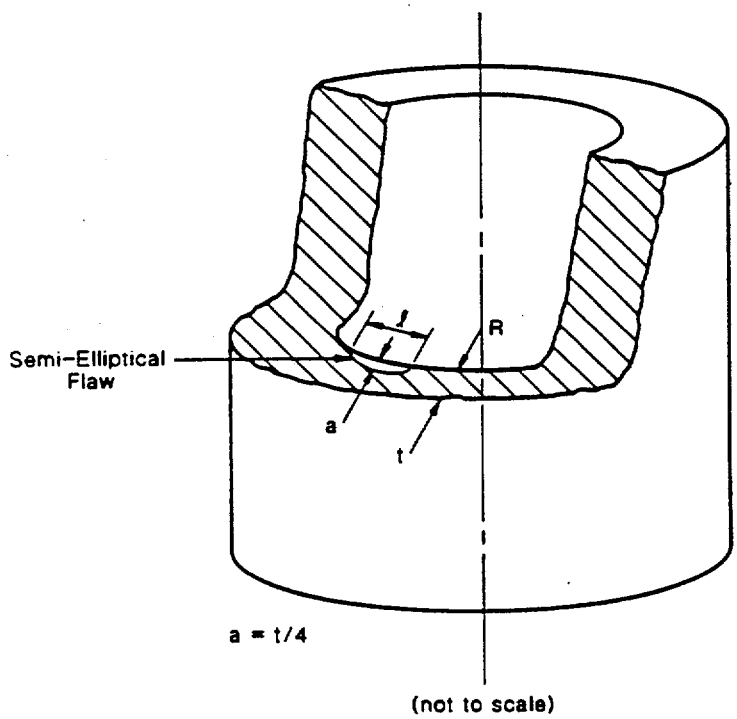

3. Material Properties and Reactor Vessel Design Data

An upper-shelf fracture toughness material model is presented below, as well as mechanical properties for the weld material and reactor vessel design data.

3.1 J-Integral Resistance Model for Mn-Mo-Ni/Linde 80 Welds

A model for the J-integral resistance versus crack extension curve (J-R curve) required to analyze low upper-shelf energy materials has been derived specifically for Mn-Mo-Ni/Linde 80 weld materials. A previous analysis of the Turkey Point reactor vessels for 32 EFPY's [2] described the development of this toughness model from a large data base of fracture specimens. Using a modified power law to represent the J-R curve, the mean value of the J-integral is given by:

$$J = 1000\ C1(\Delta a)^{C2} \exp(C3\ \Delta a^{C4})$$

with

$$\ln(C1) = a1 + a2\,Cu\,(\phi_t)^{a7} + a3\,T + a4\ \ln(B_N)$$

$$C2 = d1 + d2\ \ln(C1) + d3\ \ln(B_N)$$

$$C3 = d4 + d5\ \ln(C1) + d6\ \ln(B_N)$$

$$C4 = -0.4489$$

where

Δa	=	crack extension, in.
Cu	=	copper content, Wt%
ϕ_t	=	fluence at crack tip, 10^{18} n/cm^2
T	=	temperature, °F
B_N	=	specimen net thickness, in.

and

a1	=	1.81
a2	=	-1.512
a3	=	-0.00151
a4	=	0.3935
a7	=	0.1236
d1	=	0.077
d2	=	0.1164
d3	=	0.07222
d4	=	-0.08124
d5	=	-0.00920
d6	=	0.05183

A lower bound ($-2S_e$) J-R curve is obtained by multiplying J-integrals from the mean J-R curve by 0.699 [2]. It was shown in Reference 1 that a typical lower bound J-R curve is a conservative representation of toughness values for reactor vessel beltline materials, as required by Appendix K [1] for Levels A, B, and C Service Loadings. The best estimate representation of toughness required for Level D Service Loadings is provided by the mean J-R curve.

3.2 Material Properties for Weld Material

Mechanical properties are developed in Table 3-1 for the following materials:

Reactor vessel base metal:	SA-508, Grade 2, Class 1 low alloy steel forging (changed from Class 2 to Grade 2, Class 1 in 1995)
Description:	3/4Ni-1/2Mo-1/3Cr-V
Carbon content:	< 0.30%
Linde 80 weld flux:	SA-1101

Table 3-1 Mechanical Properties for Beltline Materials

Temp.	E	Yield Strength (Sy)			Ultimate Strength (Su)			α
	Base Metal	Base Metal	TP-3 Weld	TP-4 Weld	Base Metal	TP-3 Weld	TP-4 Weld	Base Metal
	Code [5]	Code [5]	Actual [6]	Actual [6]	Code [5]	Actual [6]	Actual [6]	Code [5]
(F)	(ksi)	(ksi)	(ksi)	(ksi)	(ksi)	(ksi)	(ksi)	(in/in/F)
100	27800	50.0	76.3	70.2	80.0	92.8	90.8	6.50E-06
200	27100	47.5	72.5	66.7	80.0	92.8	90.8	6.67E-06
300	26700	46.1	70.3	64.7	80.0	92.8	90.8	6.87E-06
400	26100	45.1	68.8	63.3	80.0	92.8	90.8	7.07E-06
500	25700	44.5	67.9	62.5	80.0	92.8	90.8	7.25E-06
546	25500	44.2	67.4	62.0	80.0	92.8	90.8	7.33E-06
600	25200	43.8	66.8	61.5	80.0	92.8	90.8	7.42E-06

Also, Poisson's ratio, ν, is taken to be 0.3.

The ASME transition region fracture toughness curve for K_{Ic}, used to define the beginning of the upper-shelf toughness region, is indexed by the initial RT_{NDT} of the weld material. For SA-1101,

Initial RT_{NDT} = +10 °F

3.3 Reactor Vessel Design Data

Pertinent design data for upper-shelf flaw evaluations in the beltline region of the reactor vessel are provided below for Turkey Point Units 3 and 4.

Design Pressure, P_d	=	2485 psig (use 2500 psig)
Inside radius, R_i	=	77.75 in.
Vessel thickness, t	=	7.75 in.
Minimum cladding thickness, t_c	=	0.156 in. (use $^3/_{16}$" nominal)
Reactor coolant inlet temperature, T_C	=	546.2 °F (use 546 °F)

3.4 J-Integral Resistance for SA-1101 Weld Material

Values of J-integral resistance from the upper-shelf toughness model of Section 3.1 are dependent on the temperature and fluence at the crack tip location, the copper content of the weld material, and the size (thickness) of the fracture specimen. These parameters are listed below for the reactor vessels at Turkey Point Units 3 and 4.

Projected inside surface fluence at 48 EFPY's, $\phi_{t\,IS}$	=	55.0×10^{18} n/cm^2
Copper content of SA-1101 weld material, Cu	=	0.26 Wt%*
Net specimen thickness, B_N	=	0.8 in.

* A revised best estimate copper content has been established for weld metal SA-1101 (wire heat 71249) as 0.23 Wt%. Using a copper content value of 0.26 Wt% in the present analysis is conservative.

Crack tip temperature varies with plant operation. At normal operating conditions, the temperature at the crack tip, T, is taken to be the inlet temperature, or

Crack tip temperature, $T = T_C = 546$ °F

Fluence at the crack tip is determined using the attenuation equation from Regulatory Guide 1.99, Rev. 2 [4]:

$$\phi_t = \phi_{t\,IS}\, e^{-0.24x}$$

where

ϕ_t = attentuated fluence at crack tip, n/cm^2

ϕ_{IS} = fluence at inside surface, n/cm^2

x = depth into the vessel wall, in.

Values of the J-integral resistance at a ductile flaw extension of 0.10 in., $J_{0.1}$, can then be defined for the following flaw depths:

Flaw Depth a (in.)	Extension Δa (in.)	Total Depth $x = a + \Delta a$ (in.)	Fluence ϕ_t (10^{18} n/cm^2)	J-Integral Resistance, $J_{0.1}$ Mean (lb/in)	Lower Bound (lb/in)
t/4 = 1.9375	0.1	2.0375	33.7	822	575
t/10 = 0.775	0.1	0.875	44.6	810	566

4. Analytical Methodology

Upper-shelf toughness is evaluated through use of fracture mechanics analytical methods that utilize the acceptance criteria and evaluation procedures of Section XI, Appendix K [1], where applicable. Since the Turkey Point reactor vessels contain only circumferential welds in the beltline region, only circumferentially oriented flaws need be addressed in the present analysis.

4.1 Procedure for Evaluating Levels A and B Service Loadings

The applied J-integral is calculated per Appendix K, paragraph K-4210 [1], using an effective flaw depth to account for small scale yielding at the crack tip, and evaluated per K-4220 for upper-shelf toughness and per K-4310 for flaw stability, as outlined below.

(1) For a circumferential flaw of depth a, the stress intensity factor due to internal pressure is calculated with a safety factor (SF) on pressure using the following:

$$K_{Ip} = (SF)p\left(1+\frac{R_i}{2t}\right)(\pi a)^{0.5} F_2$$

where

$$F_2 = 0.885 + 0.233\left(\frac{a}{t}\right) + 0.345\left(\frac{a}{t}\right)^2, \qquad 0.20 \le \left(\frac{a}{t}\right) \le 0.50$$

(2) For a circumferential flaw of depth a, the stress intensity factor due to radial thermal gradients is calculated using the following:

$$K_{It} = C_m(CR)t^{2.5} F_3, \qquad 0 \le (CR) \le 100\ ^\circ\text{F/hr}$$

where for SA-508, Class 2 steels the material coefficient is defined as

$$C_m = \frac{E\alpha}{(1-\nu)d} = 0.0051,$$

(CR) = cooldown rate (°F/hr), and

$$F_3 = 0.1181 + 0.5353\left(\frac{a}{t}\right) - 1.273\left(\frac{a}{t}\right)^2 + 0.6046\left(\frac{a}{t}\right)^3, \quad 0.20 \le \left(\frac{a}{t}\right) \le 0.50$$

(3) The effective flaw depth for small scale yielding, a_e, is calculated using the following:

$$a_e = a + \left(\frac{1}{6\pi}\right)\left[\frac{K_{Ip} + K_{It}}{\sigma_y}\right]^2$$

(4) For a circumferential flaw of depth a_e, the stress intensity factor due to internal pressure is

$$K'_{Ip} = (SF)p\left(1 + \frac{R_i}{2t}\right)(\pi a_e)^{0.5} F'_2$$

where

$$F'_2 = 0.885 + 0.233\left(\frac{a_e}{t}\right) + 0.345\left(\frac{a_e}{t}\right)^2, \qquad 0.20 \le \left(\frac{a_e}{t}\right) \le 0.50$$

(5) For a circumferential flaw of depth a_e, the stress intensity factor due to radial thermal gradients is

$$K'_{It} = C_m(CR)t^{2.5} F'_3, \qquad 0 \le (CR) \le 100\ ^\circ\text{F/hr}$$

where

$$F'_3 = 0.1181 + 0.5353\left(\frac{a_e}{t}\right) - 1.273\left(\frac{a_e}{t}\right)^2 + 0.6046\left(\frac{a_e}{t}\right)^3, \quad 0.20 \le \left(\frac{a_e}{t}\right) \le 0.50$$

(6) The J-integral due to applied loads for small scale yielding is calculated using the following:

$$J_1 = 1000\frac{\left(K'_{Ip} + K'_{It}\right)^2}{E'}$$

where

$$E' = \frac{E}{1 - \nu^2}$$

(7) Evaluation of upper-shelf toughness at a flaw extension of 0.10 in. is performed for a flaw depth,

$$a = 0.25t + 0.10\,\text{in.},$$

using

$$SF = 1.15$$
$$p = P_a$$

where P_a is the accumulation pressure for Levels A and B Service Loadings, such that

$$J_1 < J_{0.1}$$

where

J_1 = the applied J-integral for a safety factor of 1.15 on pressure, and a safety factor of 1.0 on thermal loading
$J_{0.1}$ = the J-integral resistance at a ductile flaw extension of 0.10 in.

(8) Evaluation of flaw stability is performed through use of a crack driving force diagram procedure by comparing the slopes of the applied J-integral curve and the J-R curve. The applied J-integral is calculated for a series of flaw depths corresponding to increasing amounts of ductile flaw extension. The applied pressure is the accumulation pressure for Levels A and B Service Loadings, P_a, and the safety factor (SF) on pressure is 1.25. Flaw stability at a given applied load is verified when the slope of the applied J-integral curve is less than the slope of the J-R curve at the point on the J-R curve where the two curves intersect.

4.2 Procedure for Evaluating Levels C and D Service Loadings

Levels C and D Service Loadings are evaluated using the one-dimensional, finite element, thermal and stress models and linear elastic fracture mechanics methodology of the PCRIT computer code to determine stress intensity factors for the Level D Turkey Point steam line break (SLB) without offsite power transient. Since this transient bounds all Level C transients [5], it is also used to evaluate Level C Service Loadings.

The evaluation is performed as follows:

(1) Utilize PCRIT to calculate stress intensity factors for a semi-elliptical depth flaw depth of $^1/_{10}$ the base metal wall thickness, as a function of time, due to internal pressure and radial thermal gradients with a factor of safety of 1.0 on loading. The critical time in the transient occurs at that point where the stress intensity factor most closely approaches the upper-shelf toughness curve.

(2) At the critical transient time, develop a crack driving force diagram with the applied J-integral and J-R curves plotted as a function of flaw extension. The adequacy of the upper-shelf toughness is evaluated by comparing the applied J-integral with the J-R curve at a flaw extension of 0.10 in. Flaw stability is assessed by examining the slopes of the applied J-integral and J-R curves at the points of intersection.

4.3 Temperature Range for Upper-Shelf Fracture Toughness Evaluations

Upper-shelf fracture toughness is determined through use of Charpy V-notch impact energy versus temperature plots by noting the temperature above which the Charpy energy remains on a plateau, maintaining a relatively high constant energy level. Similarly, fracture toughness can be addressed in three different regions on the temperature scale, i.e. a lower-shelf toughness region, a transition region, and an upper-shelf toughness region. Fracture toughness of reactor vessel steel and associated weld metals are conservatively predicted by the ASME initiation toughness curve, K_{Ic}, in lower-shelf and transition regions. In the upper-shelf region, the upper-shelf toughness curve, K_{Jc}, is derived from the upper-shelf J-integral resistance model described in Section 3.1. The upper-shelf toughness then becomes a function of fluence, copper content, temperature, and fracture specimen size. When upper-shelf toughness is plotted versus temperature, a plateau-like curve develops that decreases slightly with increasing temperature. Since the present analysis addresses the low upper-shelf fracture toughness issue, only the upper-shelf temperature range, which begins at the intersection of K_{Ic} and the upper-shelf toughness curves, is considered.

4.4 Effect of Cladding Material

Although the PCRIT code utilized in the flaw evaluations for Levels C and D Service Loadings has a built-in cladding model to include the effect of thermal expansion in the cladding on stress, the code does not consider stresses in the cladding when calculating stress intensity factors for thermal loads. To account for this cladding effect, an additional stress intensity factor, K_{Iclad}, is calculated separately and added to the total stress intensity factor computed by PCRIT.

The contribution of cladding stresses to stress intensity factor was examined previously [5] for the Zion-1 WF-70 weld using thermal loads for the Turkey Point SLB without offsite power transient. The maximum value of K_{Iclad}, at any time during the transient and for any flaw depth, was determined to be 9.0 ksi$\sqrt{\text{in}}$. Since the Zion and Turkey Point reactor vessels are similar in design, this value for K_{Iclad} will also be used for the present flaw evaluations.

5. Applied Loads

The Levels A and B Service Loadings required by Appendix K are an accumulation pressure (internal pressure load) and a cooldown rate (thermal load). Since Levels C and D Service Loadings are not specified by the Code, Levels C and D pressurized thermal shock events are reviewed and a worst case transient is selected for use in flaw evaluations.

5.1 Levels A and B Service Loadings

Per paragraph K-1300 of Appendix K [1], the accumulation pressure used for flaw evaluations should not exceed 1.1 times the design pressure. Using 2.5 ksi as the design pressure, the accumulation pressure is 2.75 ksi. The cooldown rate is also taken to be the maximum required by Appendix K, 100 °F/hour.

5.2 Levels C and D Service Loadings

As discussed in Section 4.2, the limiting transient used in the PCRIT analysis is the Level D Turkey Point steam line break without offsite power transient. Pressure and temperature variations for this transient are shown in Figure 5-1. The PCRIT analysis of this transient was of sufficient duration to capture the peak value of stress intensity factor over time.

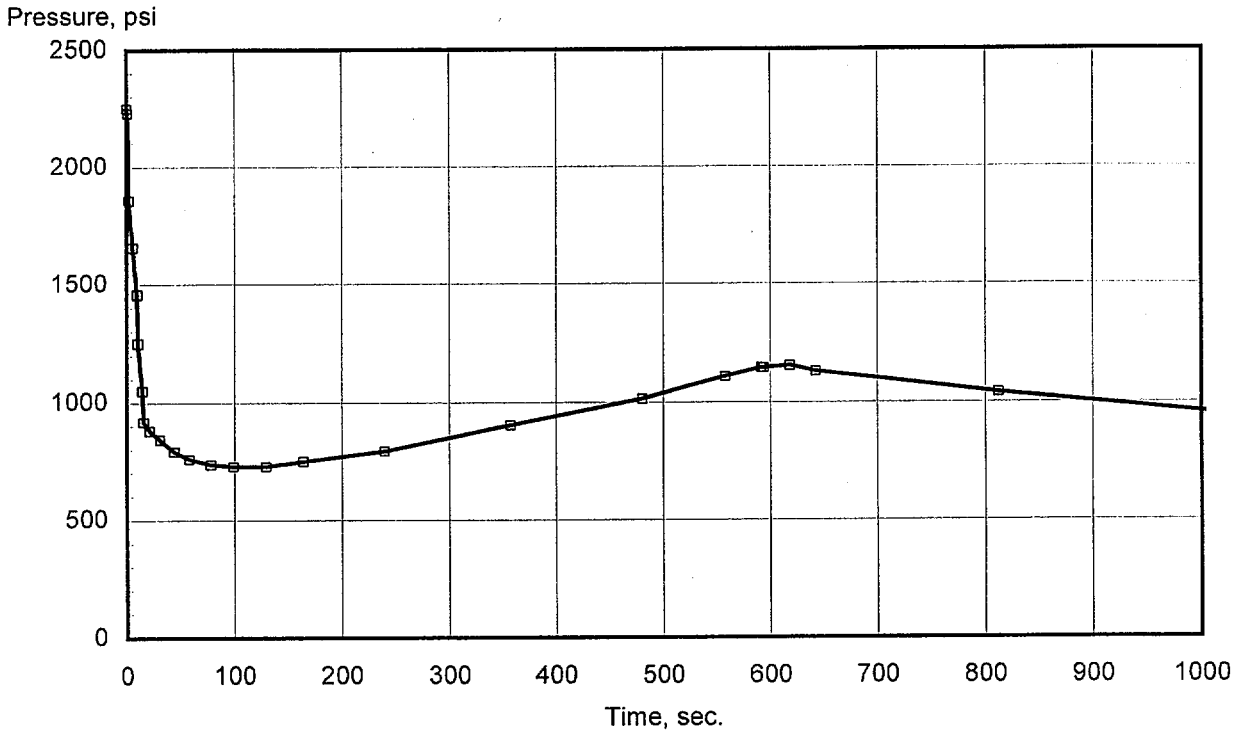

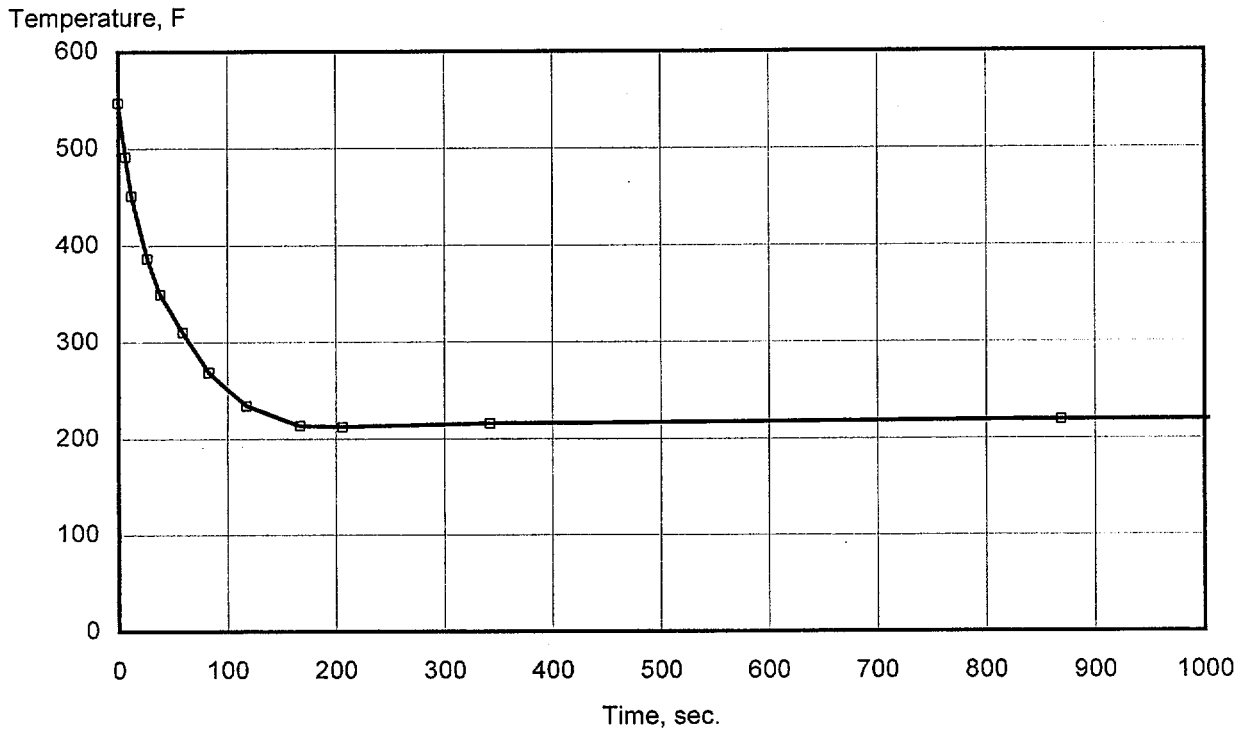

Figure 5-1 Turkey Point Steam Line Break without Offsite Power Transient

6. Evaluation for Levels A and B Service Loadings

Initial flaw depths equal to $^1/_4$ of the vessel wall thickness are analyzed for Levels A and B Service Loadings following the procedure outlined in Section 4.1 and evaluated for acceptance based on values for the J-integral resistance of the material from Section 3.4. Calculations are carried out for Turkey Point Units 3 and 4, the only difference being the material yield strengths, which has a small effect on the plastic zone correction to the flaw depth due to small scale yielding. The results of the evaluation are presented in Table 6-1, where it is seen that the minimum ratio of material J-resistance ($J_{0.1}$) to applied J-integral (J_1) is 4.06 (for Unit 4), which is significantly higher than the minimum acceptable value of 1.0.

The flaw evaluation for the controlling weld (SA-1101 in Unit 4) is repeated by calculating applied J-integrals for various amounts of flaw extension with safety factors (on pressure) of 1.15 and 1.25 in Table 6-2. The results, along with mean and lower bound J-R curves developed in Table 6-3, are plotted in Figure 6-1. An evaluation line at a flaw extension 0.10 in. is also included to confirm the results of Table 6-1 by showing that the applied J-integral for a safety factor of 1.15 is less than the lower bound J-integral resistance of the material. The requirement for ductile and stable crack growth is also demonstrated by Figure 6-1 since the slope of the applied J-integral curve for a safety factor of 1.25 is considerably less than the slope of the lower bound J-R curve at the point where the two curves intersect.

Table 6-1 Flaw Evaluation for Levels A and B Service Loadings

Dimensional data:

Ri =	77.75	in.
t =	7.75	in.
ao =	1.9375	in.
Δa =	0.1000	in.
a =	2.0375	in.
a/t =	0.2629	(0.2 ≤ a/t ≤ 0.5)

Material data:

T =	546	F
E =	25500	ksi
ν =	0.3	
E' =	28022	ksi

Loading data:

Pd =	2.50	ksi
Pa =	2.75	ksi
SF =	1.15	
CR =	100	F/hr

Geometry factors for initial flaw depth (w/o plasticity correction):

F1 =	1.0515	for pressure loading and axial flaws
F2 =	0.9701	for pressure loading and circumferential flaws
F3 =	0.1818	for thermal loading and both flaw types
Cm =	0.0051	(ksi-hr)/(in²-°F)

Plant	Weld	Orient.	KIp (ksi√in)	KIt (ksi√in)	Sy (ksi)	ae (in.)	ae/t	F1'/F2'	F3'	KIp' (ksi√in)	KIt' (ksi√in)	J1 (lb/in)	J(0.1) at t/4 (lb/in)	J(0.1)/ J1
TPt. 3	SA-1101	C	46.70	15.51	67.4	2.0827	0.2687	0.9725	0.1818	47.33	15.50	141	575	4.08
TPt. 4	SA-1101	C	46.70	15.51	62.0	2.0909	0.2698	0.9730	0.1817	47.44	15.50	141	575	4.06

Table 6-2 J-Integral vs. Flaw Extension for Levels A and B Service Loadings

Ri =	77.75	in.	Pa =	2.75	ksi
t =	7.75	in.	CR =	100	F/hr
ao =	1.9375	in.	Cm =	0.0051	(ksi-hr)/(in^2-°F)
			Sy =	62.0	ksi

Note: This check on flaw stability per K-4310 is performed for the limiting weld (SA-1101 at Turkey Point 4).

		SF = 1.15						SF = 1.25					
Δa (in.)	a (in.)	KIp (ksi√in)	KIt (ksi√in)	ae (in.)	KIp' (ksi√in)	KIt' (ksi√in)	J1 (lb/in)	KIp (ksi√in)	KIt (ksi√in)	ae (in.)	KIp' (ksi√in)	KIt' (ksi√in)	J1 (lb/in)
0.000	1.9375	45.29	15.50	1.9885	46.01	15.51	135	49.23	15.50	1.9953	50.11	15.51	154
0.025	1.9625	45.64	15.51	2.0141	46.37	15.51	137	49.61	15.51	2.0210	50.51	15.51	156
0.050	1.9875	45.99	15.51	2.0397	46.73	15.51	138	49.99	15.51	2.0467	50.90	15.50	157
0.075	2.0125	46.35	15.51	2.0653	47.09	15.50	140	50.38	15.51	2.0724	51.29	15.50	159
0.100	2.0375	46.70	15.51	2.0909	47.44	15.50	141	50.76	15.51	2.0981	51.68	15.50	161
0.125	2.0625	47.05	15.50	2.1165	47.80	15.49	143	51.14	15.50	2.1238	52.07	15.49	163
0.150	2.0875	47.40	15.50	2.1421	48.16	15.48	145	51.52	15.50	2.1495	52.46	15.48	165
0.175	2.1125	47.75	15.49	2.1677	48.52	15.47	146	51.90	15.49	2.1752	52.85	15.47	167
0.200	2.1375	48.10	15.48	2.1933	48.87	15.46	148	52.28	15.48	2.2009	53.24	15.46	168
0.225	2.1625	48.44	15.48	2.2189	49.23	15.45	149	52.66	15.48	2.2266	53.62	15.45	170
0.250	2.1875	48.79	15.47	2.2445	49.58	15.44	151	53.03	15.47	2.2523	54.01	15.43	172
0.275	2.2125	49.14	15.46	2.2701	49.94	15.42	152	53.41	15.46	2.2780	54.40	15.42	174
0.300	2.2375	49.49	15.44	2.2957	50.29	15.41	154	53.79	15.44	2.3036	54.79	15.40	176
0.325	2.2625	49.83	15.43	2.3213	50.65	15.39	156	54.17	15.43	2.3293	55.17	15.38	178
0.350	2.2875	50.18	15.41	2.3469	51.00	15.37	157	54.54	15.41	2.3550	55.56	15.36	180
0.375	2.3125	50.52	15.40	2.3725	51.35	15.35	159	54.92	15.40	2.3807	55.94	15.34	181
0.400	2.3375	50.87	15.38	2.3981	51.71	15.33	160	55.29	15.38	2.4064	56.33	15.32	183
0.425	2.3625	51.22	15.36	2.4237	52.06	15.31	162	55.67	15.36	2.4321	56.71	15.30	185
0.450	2.3875	51.56	15.34	2.4493	52.41	15.28	164	56.04	15.34	2.4578	57.10	15.27	187
0.475	2.4125	51.91	15.32	2.4749	52.76	15.26	165	56.42	15.32	2.4835	57.48	15.25	189
0.500	2.4375	52.25	15.29	2.5005	53.12	15.23	167	56.79	15.29	2.5092	57.87	15.22	191

Table 6-3 J-R Curves for Evaluation of Levels A and B Service Loadings

Plant: Turkey Point 3&4

T =	546	F
t =	7.75	in.
ao =	1.9375	in.
Fsurf =	55.0	10^{18} n/cm^2 @ inside surface
Cu =	0.26	
Bn =	0.80	in

Δa (in.)	a (in.)	Fl (10^{18} n/cm^2)	lnC1	C1	C2	C3	J-R (lb/in) Mean	J-R (lb/in) Low
0.001	1.9385	34.5391	0.28867	1.33465	0.09449	-0.09546	83	58
0.002	1.9395	34.5309	0.28869	1.33468	0.09449	-0.09546	157	110
0.004	1.9415	34.5143	0.28873	1.33473	0.09449	-0.09546	254	177
0.007	1.9445	34.4894	0.28878	1.33480	0.09450	-0.09546	345	241
0.010	1.9475	34.4646	0.28884	1.33487	0.09450	-0.09546	406	284
0.015	1.9525	34.4233	0.28893	1.33499	0.09452	-0.09546	479	335
0.020	1.9575	34.3820	0.28902	1.33511	0.09453	-0.09546	531	371
0.030	1.9675	34.2996	0.28920	1.33535	0.09455	-0.09546	605	423
0.040	1.9775	34.2174	0.28938	1.33559	0.09457	-0.09546	657	459
0.050	1.9875	34.1353	0.28956	1.33584	0.09459	-0.09547	698	488
0.070	2.0075	33.9719	0.28992	1.33632	0.09463	-0.09547	758	530
0.100	2.0375	33.7282	0.29046	1.33704	0.09469	-0.09547	822	575
0.120	2.0575	33.5667	0.29082	1.33752	0.09474	-0.09548	854	597
0.140	2.0775	33.4059	0.29118	1.33800	0.09478	-0.09548	882	616
0.160	2.0975	33.2460	0.29154	1.33849	0.09482	-0.09548	905	633
0.200	2.1375	32.9283	0.29226	1.33945	0.09490	-0.09549	944	660
0.250	2.1875	32.5355	0.29315	1.34065	0.09501	-0.09550	984	688
0.300	2.2375	32.1475	0.29405	1.34185	0.09511	-0.09551	1016	710
0.350	2.2875	31.7640	0.29495	1.34305	0.09522	-0.09552	1043	729
0.400	2.3375	31.3851	0.29584	1.34425	0.09532	-0.09552	1066	746
0.450	2.3875	31.0107	0.29673	1.34545	0.09542	-0.09553	1087	760
0.500	2.4375	30.6408	0.29762	1.34665	0.09553	-0.09554	1106	773

Figure 6-1 J-Integral vs. Flaw Extension for Levels A and B Service Loadings

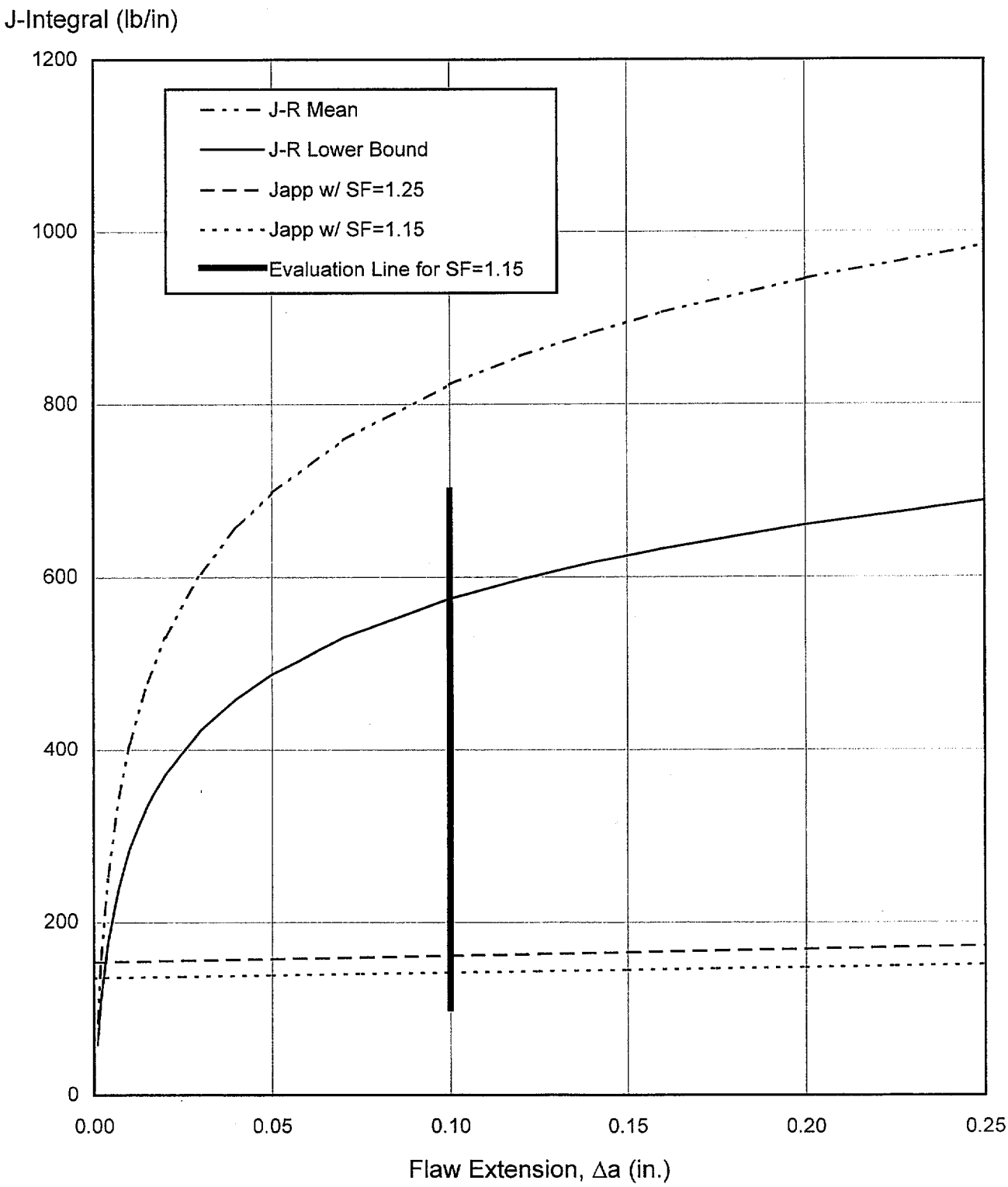

7. Evaluation for Levels C and D Service Loadings

A flaw depth of $^1/_{10}$ the base metal wall thickness is used to evaluate the Levels C and D Service Loadings. Based on the results of Table 6-1 for Levels A and B Service Loadings and flaw depths equal to $^1/_4$ of the wall thickness, the controlling weld for Levels C and D Service Loadings would be expected to be the SA-1101 weld of Unit 4. Stress intensity factors calculated by the PCRIT code to account for the effect of residual stresses in welds, however, are proportional to material yield strength. The Unit 3 weld is therefore be considered to be the controlling weld for Level C and D conditions since it has the higher yield strength.

Table 7-1 presents applied stress intensity factors, K_I, from the PCRIT pressurized thermal shock analysis of the steam line break transient described in Section 5.2, along with total stress intensity factors after including a contribution of 9.0 ksi√in from cladding, as discussed in Section 4.4. The stress intensity factor calculated by the PCRIT code is the sum of thermal, residual stress, deadweight, and pressure terms. Table 7-1 also shows the variation of crack tip temperature with time for the SLB event. To determine the critical time in the transient for the Level C and D flaw evaluation, allowable stress intensity factors are calculated for both the transition and upper-shelf toughness regions. Transition region toughness is obtained from the ASME Section XI equation for crack initiation [6],

$$K_{Ic} = 33.2 + 2.806 \exp[0.02(T - RT_{NDT} + 100°F)]$$

using an RT_{NDT} value of 315.1 °F from PCRIT for a flaw depth of $^1/_{10}$ the wall thickness, where:

K_{Ic} = transition region toughness, ksi√in
T = crack tip temperature, °F

Upper-shelf toughness is derived from the J-integral resistance model of Section 3.1 for a flaw depth of $^1/_{10}$ the wall thickness, a crack extension of 0.10 in., and a fluence value of 44.6×10^{18} n/cm^2, as follows:

$$K_{Jc} = \sqrt{\frac{J_{0.1}E}{1000(1-\nu^2)}}$$

where

K_{Jc} = upper-shelf region toughness, ksi√in
$J_{0.1}$ = J-integral resistance at $\Delta a = 0.1$ in.

Toughness values are given in Tables 7-2 and 7-3 for the transition and upper-shelf regions, respectively, as a function of temperature.

Figure 7-1 shows the variation of applied stress intensity factor, K_I, transition toughness, K_{Ic}, and upper-shelf toughness, K_{Jc} with temperature. The small rectangles on the K_I curve indicate points in time at which PCRIT solutions are available. In the upper-shelf toughness range, the K_I curve is closest to the lower bound K_{Jc} curve at slightly less than 3.0 minutes in the transient. For convenience, 3.0 minutes is selected as the critical time in the transient at which to perform the flaw evaluation for Levels C and D Service Loadings.

Applied J-integrals are calculated for the controlling weld (SA-1101 in Unit 3) for various flaw depths in Table 7-4 using stress intensity factors from PCRIT for the steam line break transient (at 3.0 min.) and adding 9.0 ksi$\sqrt{\text{in}}$ to account for cladding effects. Stress intensity factors are converted to J-integrals by the plain strain relationship,

$$J_{\text{applied}}(a) = 1000\frac{K^2_{I\text{total}}(a)}{E}(1-\nu^2)$$

Flaw extensions from an initial flaw depth of $^1/_{10}$ the wall thickness are determined by subtracting 0.775 in. from the built-in PCRIT flaw depths. The results, along with mean and lower bound J-R curves developed in Table 7-5, are plotted in Figure 7-2. An evaluation line is used at a flaw extension 0.10 in. to show that the applied J-integral is less than the lower bound J-integral of the material, as required by Appendix K [1]. The requirements for ductile and stable crack growth are also demonstrated by Figure 7-2 since the slope of the applied J-integral curve is considerably less than the slopes of both the lower bound and mean J-R curves at the points of intersection.

Referring to Figure 7-2, the Level D Service Loading requirement that the extent of stable flaw extension be no greater than 75% of the vessel wall thickness is easily satisfied since the applied J-integral curve intersects the mean J-R curve at a flaw extension that is only a small fraction of the wall thickness (less than 1%). Also, the remaining ligament would not be subject to tensile instability, as demonstrated below by conservatively postulating a constant depth circumferential flaw and calculating the collapse pressure for a flaw depth equal to $^1/_{10}$ the wall thickness plus 0.10 in.

Consider:

a remaining ligament, $c = t - (t/10 + 0.10) = 7.75 - (7.75/10 + 0.10) = 6.875$ in.,

a radius to the crack tip, $R_c = R_i + t/10 + 0.10 = 77.75 + 7.75/10 + 0.10 = 78.625$ in.,

and a minimum yield strength, $\sigma_y = 62.0$ ksi for Turkey Point Unit 4.

The collapse pressure, P_c, defined as the pressure required to produce net section yielding, can be found by equating the average axial stress in the remaining ligament to the yield strength, as follows:

$$P_c R_c / 2c = \sigma_y$$

Then

$$P_c = 2c\sigma_y / R_c = 2(6.875 \text{ in.})(62.0 \text{ ksi})/(78.625 \text{ in.}) = 10.8 \text{ ksi}$$

which is far greater than any anticipated accident condition pressure.

Table 7-1 K_I vs. Crack Tip Temperature for SLB

a/t =1/10 a = 0.775 in.				
Time	Temp	PCRIT KIsum	Clad KI	Total KI
0.00	547.0	28.6	9.0	37.6
0.25	545.1	22.1	9.0	31.1
0.50	534.0	28.9	9.0	37.9
0.75	517.6	35.9	9.0	44.9
1.00	500.2	42.1	9.0	51.1
1.50	467.0	53.1	9.0	62.1
2.00	437.4	61.7	9.0	70.7
2.50	412.7	68.0	9.0	77.0
3.00	392.9	72.6	9.0	81.6
3.50	377.5	75.5	9.0	84.5
4.00	365.7	77.3	9.0	86.3
4.50	356.4	78.5	9.0	87.5
5.00	348.9	79.2	9.0	88.2
5.50	342.7	79.7	9.0	88.7
6.00	337.4	79.9	9.0	88.9
7.00	328.6	79.9	9.0	88.9
8.00	321.5	79.6	9.0	88.6
9.00	315.8	79.2	9.0	88.2
10.00	311.0	78.6	9.0	87.6
11.00	306.9	77.0	9.0	86.0
12.00	303.3	75.4	9.0	84.4
15.00	294.9	70.3	9.0	79.3
20.00	284.1	62.7	9.0	71.7
25.00	275.6	56.2	9.0	65.2
30.00	269.0	50.6	9.0	59.6
33.33	265.7	47.2	9.0	56.2

Table 7-2 K_{Ic} at $^{1}/_{10}$ Wall Thickness

KIc Curve at a = 1/10T		
RTndt = 315.1 F		
T (F)	T-RTndt	KIc (ksi√in)
200	-115.1	35.3
210	-105.1	35.7
220	-95.1	36.3
230	-85.1	37.0
240	-75.1	37.8
250	-65.1	38.8
260	-55.1	40.1
270	-45.1	41.6
280	-35.1	43.5
290	-25.1	45.8
300	-15.1	48.5
310	-5.1	51.9
320	4.9	56.1
330	14.9	61.1
340	24.9	67.3
350	34.9	74.9
360	44.9	84.1
370	54.9	95.4
380	64.9	109.1
390	74.9	125.9
400	84.9	146.5
410	94.9	171.5
420	104.9	202.2
430	114.9	239.6
440	124.9	285.3
450	134.9	341.1

Table 7-3 K_{Jc} at $^1/_{10}$ Wall Thickness with Δa = 0.10 in.

KJc Curve with Δa = 0.10 in.								
	Fluence =	55.0	x 10^{18} n/cm^2 at inside surface					
	=	44.6	x 10^{18} n/cm^2 at t/10 + 0.1"					
	Δa =	0.10	in.					
	Cu =	0.26	Wt-%					
	E =	25500	ksi					
	ν =	0.30						
	C4 =	-0.4489						
T (F)	lnC1	C1	C2	C3	Mean J(0.1) (lb/in)	Lower Bound J(0.1) (lb/in)	Mean KJc (ksi√in)	Lower Bound KJc (ksi√in)
200	0.79161	2.20695	0.15303	-0.10008	1171	819	181.1	151.5
250	0.71611	2.04646	0.14424	-0.09939	1110	776	176.4	147.5
300	0.64061	1.89764	0.13545	-0.09869	1053	736	171.7	143.6
350	0.56511	1.75964	0.12666	-0.09800	998	698	167.2	139.8
400	0.48961	1.63168	0.11788	-0.09731	946	661	162.8	136.1
450	0.41411	1.51303	0.10909	-0.09661	897	627	158.5	132.6
500	0.33861	1.40300	0.10030	-0.09592	850	595	154.4	129.1
550	0.26311	1.30097	0.09151	-0.09522	806	564	150.3	125.7
600	0.18761	1.20637	0.08272	-0.09453	764	534	146.4	122.4

Table 7-4 J-Integral vs. Flaw Extension for Levels C and D Service Loadings

Time = 3.0 min.					E =	25500 ksi	
Crack tip at t/10		t =	7.75 in.		ν =	0.3	
(a/t)*40	a (in.)	Δa (in.)	Temp. (F)	KIsum	KIclad	KItotal	Japp (lb/in)
1	0.1938		325.2	45.8	9.0	54.8	107
2	0.3875		349.3	61.3	9.0	70.3	176
3	0.5813		371.9	68.6	9.0	77.6	215
4	0.7750	0.0000	392.9	72.6	9.0	81.6	238
5	0.9688	0.1938	412.2	74.7	9.0	83.7	250
6	1.1625	0.3875	429.8	75.5	9.0	84.5	255
7	1.3563	0.5813	445.7	75.3	9.0	84.3	254
8	1.5500	0.7750	460.1	74.6	9.0	83.6	250
9	1.7438	0.9688	472.9	73.3	9.0	82.3	242
10	1.9375	1.1625	484.1	71.9	9.0	80.9	233
12	2.3250	1.5500	502.6	68.1	9.0	77.1	212
14	2.7125	1.9375	516.5	63.8	9.0	72.8	189
16	3.1000	2.3250	526.5	59.4	9.0	68.4	167
18	3.4875	2.7125	533.6	54.8	9.0	63.8	145
20	3.8750	3.1000	538.5	50.2	9.0	59.2	125
22	4.2625	3.4875	541.7	46.0	9.0	55.0	108
24	4.6500	3.8750	543.8	42.2	9.0	51.2	93
26	5.0375	4.2625	545.1	39.1	9.0	48.1	82
28	5.4250	4.6500	545.9	36.8	9.0	45.8	75
30	5.8125	5.0375	546.4	35.3	9.0	44.3	70
32	6.2000	5.4250	546.7	34.2	9.0	43.2	67

Note: At Δa = 0.10 in., Japp = 244 lb/in.

Table 7-5 J-R Curves for Evaluation of Levels C and D Service Loadings

Plant: Turkey Point 3&4

Time =	3.00	min.
T =	392.9	F
t =	7.75	in.
ao =	0.775	in.
Fsurf =	55.0	10^{18} n/cm^2 @ inside surface
Cu =	0.26	
Bn =	0.80	in

Δa (in.)	a (in.)	Fl (10^{18} n/cm^2)	lnC1	C1	C2	C3	J-R (lb/in) Mean	J-R (lb/in) Low
0.001	0.7760	45.6541	0.49848	1.64622	0.11891	-0.09739	83	58
0.002	0.7770	45.6431	0.49850	1.64625	0.11891	-0.09739	161	113
0.004	0.7790	45.6212	0.49854	1.64632	0.11891	-0.09739	267	187
0.007	0.7820	45.5884	0.49860	1.64641	0.11892	-0.09739	370	259
0.010	0.7850	45.5556	0.49865	1.64650	0.11893	-0.09739	441	308
0.015	0.7900	45.5009	0.49875	1.64665	0.11894	-0.09739	526	368
0.020	0.7950	45.4464	0.49884	1.64681	0.11895	-0.09739	588	411
0.030	0.8050	45.3374	0.49903	1.64712	0.11897	-0.09739	678	474
0.040	0.8150	45.2288	0.49921	1.64742	0.11899	-0.09739	743	519
0.050	0.8250	45.1203	0.49940	1.64773	0.11901	-0.09740	794	555
0.070	0.8450	44.9043	0.49977	1.64835	0.11906	-0.09740	871	609
0.100	0.8750	44.5821	0.50033	1.64927	0.11912	-0.09740	953	666
0.120	0.8950	44.3687	0.50071	1.64988	0.11917	-0.09741	996	696
0.140	0.9150	44.1562	0.50108	1.65050	0.11921	-0.09741	1032	721
0.160	0.9350	43.9448	0.50145	1.65111	0.11925	-0.09741	1063	743
0.200	0.9750	43.5249	0.50219	1.65234	0.11934	-0.09742	1116	780
0.250	1.0250	43.0057	0.50312	1.65388	0.11945	-0.09743	1169	817
0.300	1.0750	42.4927	0.50405	1.65541	0.11956	-0.09744	1213	848
0.350	1.1250	41.9859	0.50498	1.65695	0.11966	-0.09745	1250	874
0.400	1.1750	41.4851	0.50590	1.65848	0.11977	-0.09745	1283	897
0.450	1.2250	40.9902	0.50683	1.66001	0.11988	-0.09746	1312	917
0.500	1.2750	40.5013	0.50775	1.66154	0.11999	-0.09747	1338	936

Figure 7-1 K_I vs. Crack Tip Temperature for SLB

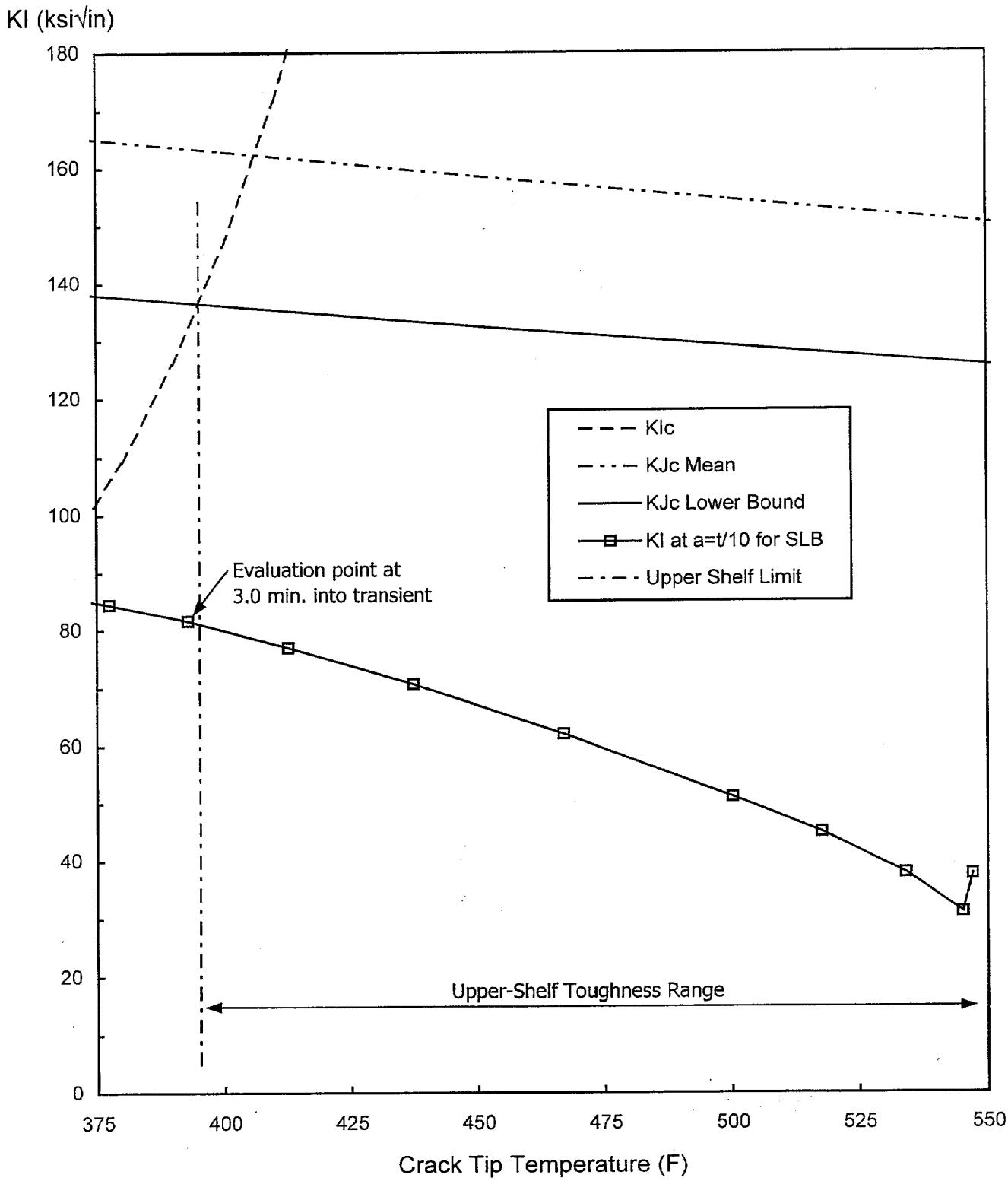

Figure 7-2 J-Integral vs. Flaw Extension for Levels C and D Service Loadings

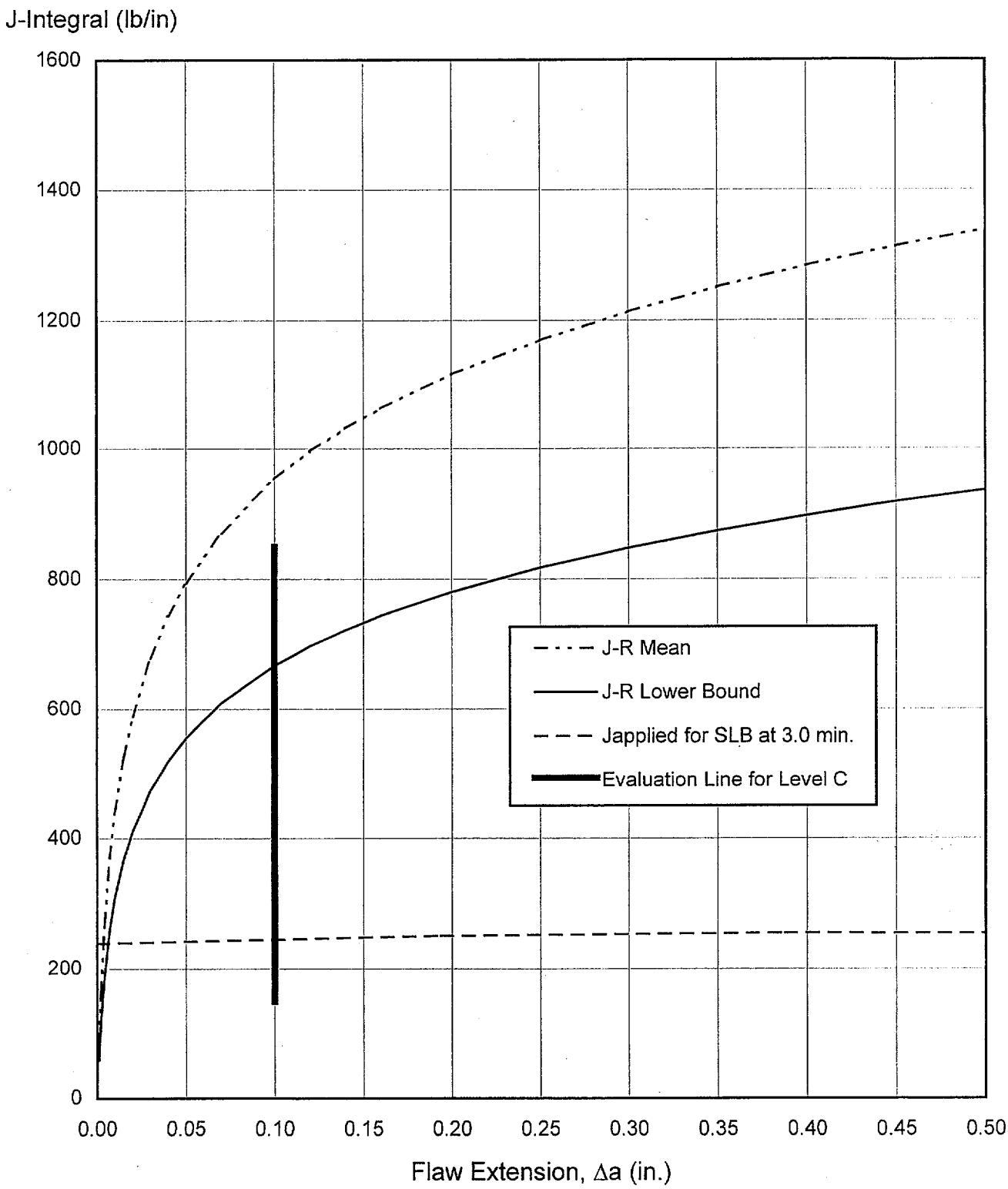

8. Summary of Results

A low upper-shelf fracture mechanics analysis has been performed to evaluate the SA-1101 circumferential reactor vessel welds at Turkey Point Units 3 and 4 for projected low upper-shelf energy levels at 48 EFPY, considering Levels A, B, C, and D Service Loadings of the ASME Code.

Evidence that the ASME Code, Section XI, Appendix K [1] acceptance criteria have been satisfied for Levels A and B Service Loadings is provided by the following:

(1) Figure 6-1 shows that with a factors of safety of 1.15 on pressure and 1.0 on thermal loading, the applied J-integral (J_1) is less than the J-integral of the material at a ductile flaw extension of 0.10 in. ($J_{0.1}$). The ratio $J_{0.1}/J_1 = 4.06$ which is greater than the required value of 1.0.

(2) Figure 6-1 shows that with a factors of safety of 1.25 on pressure and 1.0 on thermal loading, flaw extensions are ductile and stable since the since the slope of the applied J-integral curve is less than the slope of the lower bound J-R curve at the point where the two curves intersect.

Evidence that the ASME Code, Section XI, Appendix K [1] acceptance criteria have been satisfied for Levels C and D Service Loadings is provided by the following:

(1) Figure 7-2 shows that with a factor of safety of 1.0 on loading, the applied J-integral (J_1) is less than the J-integral of the material at a ductile flaw extension of 0.10 in. ($J_{0.1}$). From Tables 7-4 and 7-5, the ratio $J_{0.1}/J_1 = 666/244 = 2.73$, which is greater than the required value of 1.0.

(2) Figure 7-2 shows that with a factor of safety of 1.0 on loading, flaw extensions are ductile and stable since the since the slope of the applied J-integral curve is less than the slopes of both the lower bound and mean J-R curves at the points of intersection.

(3) Figure 7-2 shows that flaw growth is stable at much less than 75% of the vessel wall thickness. It has also been shown that the remaining ligament is sufficient to preclude tensile instability by a large margin.

9. Conclusion

The limiting Turkey Point Unit 3 and 4 reactor vessel beltline welds satisfy the acceptance criteria of Appendix K to Section XI of the ASME Code [1] for projected low upper-shelf Charpy impact energy levels at 48 effective full power years of plant operation.

10. References

1. ASME Boiler and Pressure Vessel Code, Section XI, Division 1, 1995 Edition with Addenda through 1996.

2. BAW-2118P, Low Upper-Shelf Toughness Fracture Analysis of Reactor Vessels of Turkey Point Units 3 and 4 for Load Level A & B Conditions, November 1991.

3. ASME Boiler and Pressure Vessel Code, Section II, Part D, 1995 Edition with Addenda through 1996.

4. U.S. Nuclear Regulatory Commission Regulatory Guide 1.99, Revision 2, May 1988.

5. BAW-2178P, Low Upper-Shelf Toughness Fracture Mechanics Analysis of Reactor Vessels of B&W Owners Reactor Vessel Working Group for Level C & D Service Loads, February 1993.

6. Marston, T.U., Flaw Evaluation Procedures: ASME Section XI, Report NP-719-SR, Electric Power Research Institute, Palo Alto, California, August 1978.