AmerGen

AmerGen Energy Company, LLC
Three Mile Island Unit 1
Route 441 South, P.O. Box 480
Middletown, PA 17057

Telephone: 717-944-7621

An Exelon/British Energy Company

April 23, 2001
5928-01-20113

U. S. Nuclear Regulatory Commission
Washington, DC 20555

Attn: Document Control Desk

Dear Sir or Madam:

SUBJECT: THREE MILE ISLAND NUCLEAR STATION UNIT 1 AND UNIT 2
OPERATING LICENSE NO. DPR-50 AND POSSESSION ONLY LICENSE NO. DPR 73
DOCKET NOS. 50-289 AND 50-320
COMBINED 2000 ANNUAL RADIOACTIVE EFFLUENT RELEASES REPORT

The Annual Radioactive Effluent Releases Report required by TMI-1 Technical Specification 6.9.4.1, TMI-2 Technical Specifications 6.8.1.2, and 6.12, and the Off-Site Dose Calculation Manual Part 4, Section 2.1 is enclosed.

Attachment 1 contains a summary of the quantities of radioactive liquid and gaseous effluents and solid waste released from the site as outlined in Reg. Guide 1.21, Rev. 1, with data summarized on a quarterly basis following the format of Appendix B thereof.

Attachment 2 contains information for each type of solid waste shipped offsite during the report period including the container volume, total curie quantity (specified as determined by measurement or estimate), principal radionuclides (specified as determined by measurement or estimate), type of waste, type of shipment and solidification agent(s).

Attachment 3 includes a summary of unplanned releases from the site to unrestricted areas of radioactive materials in gaseous and liquid effluents made during the reporting period.

Attachment 4 describes any changes made during 2000 to the Process Control Program (PCP) documents or to the Offsite Dose Calculation Manual (ODCM) and a listing of new locations for dose calculations and/or environmental monitoring identified by the land use census pursuant to Part 3, Section 8.2 of the ODCM.

Attachment 5 reports all instrumentation not returned to operable status within 30 days per the TMI ODCM Part 1, Sections 2.1.1.b and 2.1.2.b and Part 2, Section 2.1.2.b.

Attachment 6 is an annual summary of hourly meteorological data collected for 2000 in the form of joint frequency distribution of wind speed, wind direction and atmospheric stability.

IE48

Attachment 7 is an assessment of the radiation doses due to the radioactive liquid and gaseous effluents released from the respective unit during 2000.

Attachment 8 is an assessment of the radiation doses from the radioactive liquid and gaseous effluents to members of the public due to their activities inside the site boundary during 2000.

Attachment 9 is an assessment of the radiation doses to the likely most exposed real individual from reactor releases and other nearby uranium fuel cycle sources including doses from primary effluent pathways and direct radiation for 2000. This assessment shows conformance with 40 CFR 190 "Environmental Radiation Protection Standards for Nuclear Power Operation."

Attachment 10 is a summation of deviations from the sampling and analysis regime specified in the ODCM for TMI-1 and TMI-2. There were no deviations from the sampling and analysis regime specified in the ODCM for TMI-1 or TMI-2 during 2000.

Enclosure 1 is a copy of the TMI Offsite Dose Calculation Manual (ODCM), revision 20, which was current as of December 31, 2000. There was one revision made to the ODCM during 2000. Revision 20 was issued on November 8, 2000.

Enclosure 2 is a copy of the procedure change request that modified the ODCM from revision 19 to revision 20.

Please contact Adam Miller of TMI-1 Regulatory Assurance at 717-948-8128 if you have any questions concerning this report.

Sincerely,

George H. Gellrich
Plant Manager

GHG/awm

Attachments/Enclosures

cc: Region 1 Administrator
TMI Senior Resident Inspector
TMI-1 Senior Project Manager
TMI-2 Project Manager
GPU Nuclear Cognizant Officer

Attachment 1
2000 Annual Radioactive Effluent Releases Report for TMI
5928-01-20113

Summary of Radioactive Liquid and Gaseous Effluents and Solid Waste Released from TMI during 2000

TABLE 1A
EFFLUENT AND WASTE DISPOSAL ANNUAL REPORT
GASEOUS EFFLUENTS-SUMMATION OF ALL RELEASES
TMI-1

	UNITS	2000 1ST QUARTER	2000 2ND QUARTER	2000 3RD QUARTER	2000 4TH QUARTER	EST. TOTAL ERROR %
A. FISSION AND ACTIVATION GASES						
1. TOTAL RELEASE	Ci	5.E-01	3.E-01	1.E-01	2.E-01	25%
2. AVERAGE RELEASE RATE FOR PERIOD	uCi/sec	6.E-02	4.E-02	2.E-02	2.E-02	
3. PERCENT OF TECH SPEC LIMIT	%	*	*	*	*	
B. IODINES						
1. TOTAL IODINE I-131	Ci	7.E-07	7.E-07	2.E-04	7.E-07	25%
2. AVERAGE RELEASE RATE FOR PERIOD	uCi/sec	8.E-08	9.E-08	2.E-05	9.E-08	
3. PERCENT OF TECH SPEC LIMIT	%	*	*	*	*	
C. PARTICULATES						
1. PARTICULATES WITH HALF-LIVES > 8 DAYS	Ci	4E-09	<1.E-04	1.E-07	<1.E-04	25%
2. AVERAGE RELEASE RATE FOR PERIOD	uCi/sec	5.E-10	NA	1.E-08	NA	
3. PERCENT OF TECH SPEC LIMIT	%	*	*	*	*	
4. GROSS ALPHA RADIOACTIVITY	Ci	<1.E-11	<1.E-11	2.E-08	<1.E-11	
D. TRITIUM						
1. TOTAL RELEASE	Ci	9.E+00	1.E+01	2.E+01	1.E+01	25%
2. AVERAGE RELEASE RATE FOR PERIOD	uCi/sec	1.E+00	2.E+00	2.E+00	2.E+00	
3. PERCENT OF TECH SPEC LIMIT	%	*	*	*	*	

* % ODCM LIMITS: LISTED ON DOSE SUMMARY TABLE
NOTE: ALL LESS THAN (<) VALUES ARE IN uCi/ml

TABLE 1C
EFFLUENT AND WASTE DISPOSAL ANNUAL REPORT (2000)
GASEOUS EFFLUENTS - GROUND LEVEL RELEASES
TMI-1

		CONTINUOUS		BATCH		CONTINUOUS		BATCH	
NUCLIDES RELEASED	UNIT	QUARTER 1	QUARTER 2	QUARTER 1	QUARTER 2	QUARTER 3	QUARTER 4	QUARTER 3	QUARTER 4
1. FISSION GASES									
AR 41	Ci	<3E-07	<3E-07	8E-03	5E-03	<3E-07	<3E-07	<3E-07	<3E-07
KR 85M	Ci	<5E-08	<5E-08	<5E-08	<5E-08	<5E-08	<5E-08	<5E-08	<5E-08
KR 85	Ci	<8E-06	<8E-06	5E-01	3E-01	<8E-06	<8E-06	1E-01	2E-01
KR 87	Ci	<8E-08	<8E-08	<8E-08	<8E-08	<8E-08	<8E-08	<8E-08	<8E-08
KR 88	Ci	<1E-07	<1E-07	<1E-07	<1E-07	<1E-07	<1E-07	<1E-07	<1E-07
XE 133	Ci	<8E-08	<8E-08	2E-02	1E-02	<8E-08	<8E-08	<8E-08	3E-04
XE 135M	Ci	<5E-07	<5E-07	<5E-07	<5E-07	<5E-07	<5E-07	<5E-07	<5E-07
XE 135	Ci	<5E-08	<5E-08	4E-09	<5E-08	<5E-08	<5E-08	<5E-08	<5E-08
XE 138	Ci	<3E-07	<3E-07	<3E-07	<3E-07	<3E-07	<3E-07	<3E-07	<3E-07
TOTAL FOR PERIOD	Ci	NA	NA	5E-01	3E-01	NA	NA	1E-01	2E-01
2. IODINES									
I 131	Ci	6E-07	7E-07	2E-08	4E-09	2E-04	7E-07	<1E-08	<1E-08
I 133	Ci	8E-06	9E-06	2E-08	6E-09	1E-05	6E-06	<1E-08	<1E-08
TOTAL FOR PERIOD	Ci	9E-06	9E-06	4E-08	1E-08	2E-04	7E-06	NA	NA
3. PARTICULATES									
CS 134	Ci	<1E-11	<1E-11	<1E-08	<1E-08	<1E-11	<1E-11	<1E-08	<1E-08
CS-137	Ci	4E-09	<1E-11	<1E-08	<1E-08	<1E-11	<1E-11	1E-07	<1E-08

NOTE: ALL LESS THAN VALUES (<) ARE IN uCi/ml

TABLE 2A
EFFLUENT AND WASTE DISPOSAL ANNUAL REPORT
LIQUID EFFLUENTS-SUMMATION OF ALL RELEASES
TMI-1

	UNITS	2000 1ST QUARTER	2000 2ND QUARTER	2000 3RD QUARTER	2000 4TH QUARTER	EST. TOTAL ERROR %
A. FISSION AND ACTIVATION PRODUCTS						
1. TOTAL RELEASES (NOT INCLUDING TRITIUM, GASES, ALPHA)	Ci	7E-04	1E-04	2E-04	4E-06	25%
2. AVERAGE DILUTED CONCENTRATION DURING PERIOD	uCi/ml	1E-10	3E-11	3E-11	8E-13	
3. PERCENT OF APPLICABLE LIMIT	%	*	*	*	*	
B. TRITIUM						
1. TOTAL RELEASE	Ci	8E-01	2E-01	4E+01	2E+02	25%
2. AVERAGE DILUTED CONCENTRATION DURING PERIOD	uCi/ml	2E-07	4E-08	7E-06	4E-05	
3. PERCENT OF APPLICABLE LIMIT	%	*	*	*	*	
C. DISSOLVED AND ENTRAINED GASES						
1. TOTAL RELEASE	Ci	<1E-04	<1E-04	<1E-04	<1E-04	25%
2. AVERAGE DILUTED CONCENTRATION DURING PERIOD	uCi/ml	NA	NA	NA	NA	
3. PERCENT OF APPLICABLE LIMIT	%	*	*	*	*	
D. GROSS ALPHA ACTIVITY						
1. TOTAL RELEASE	Ci	<1E-07	<1E-07	<1E-07	<1E-07	25%
E. VOLUME OF WASTE RELEASED (PRIOR TO DILUTION)	liters	9E+06	7E+06	8E+06	9E+06	10%
F. VOLUME OF DILUTION WATER USED	liters	5E+09	5E+09	6E+09	6E+09	10%

* % ODCM LIMITS: LISTED ON DOSE SUMMARY TABLE
NOTE: ALL LESS THAN (<) VALUES ARE IN uCi/ml

TABLE 2B
EFFLUENT AND WASTE DISPOSAL ANNUAL REPORT (2000)
LIQUID EFFLUENTS
TMI-1

		CONTINUOUS		BATCH		CONTINUOUS		BATCH	
NUCLIDES RELEASED	UNIT	QUARTER 1	QUARTER 2	QUARTER 1	QUARTER 2	QUARTER 3	QUARTER 4	QUARTER 3	QUARTER 4
CR 51	Ci	<5E-07	<5E-07	<5E-07	<5E-07	<5E-07	<5E-07	<5E-07	<5E-07
MN 54	Ci	<5E-07	<5E-07	<5E-07	<5E-07	<5E-07	<5E-07	<5E-07	<5E-07
FE 59	Ci	<5E-07	<5E-07	<5E-07	<5E-07	<5E-07	<5E-07	<5E-07	<5E-07
CO 58	Ci	<5E-07	<5E-07	<5E-07	<5E-07	<5E-07	<5E-07	<5E-07	<5E-07
CO 60	Ci	<5E-07	<5E-07	<5E-07	<5E-07	<5E-07	<5E-07	<5E-07	<5E-07
ZN 65	Ci	<5E-07	<5E-07	<5E-07	<5E-07	<5E-07	<5E-07	<5E-07	<5E-07
SR 89	Ci	<5E-08	<5E-08	<5E-08	<5E-08	<5E-08	<5E-08	<5E-08	<5E-08
SR 90	Ci	<5E-08	2E-07	<5E-08	<5E-08	3E-07	6E-07	<5E-08	1E-06
ZR 95	Ci	<5E-07	<5E-07	<5E-07	<5E-07	<5E-07	<5E-07	<5E-07	<5E-07
NB 95	Ci	<5E-07	<5E-07	<5E-07	<5E-07	<5E-07	<5E-07	<5E-07	<5E-07
MO 99	Ci	<5E-07	<5E-07	<5E-07	<5E-07	<5E-07	<5E-07	<5E-07	<5E-07
TC 99M	Ci	<5E-07	<5E-07	<5E-07	<5E-07	<5E-07	<5E-07	<5E-07	<5E-07
I 131	Ci	<1E-06	<1E-06	<1E-06	<1E-06	<1E-06	<1E-06	<1E-06	<1E-06
CS 134	Ci	<5E-07	<5E-07	<5E-07	<5E-07	<5E-07	<5E-07	<5E-07	<5E-07
CS 137	Ci	7E-04	1E-04	<5E-07	<5E-07	2E-04	1E-07	3E-05	2E-06
BA 140	Ci	<5E-07	<5E-07	<5E-07	<5E-07	<5E-07	<5E-07	<5E-07	<5E-07
LA 140	Ci	<5E-07	<5E-07	<5E-07	<5E-07	<5E-07	<5E-07	<5E-07	<5E-07
CE 141	Ci	<5E-07	<5E-07	<5E-07	<5E-07	<5E-07	<5E-07	<5E-07	<5E-07
TOTAL FOR PERIOD	Ci	7E-04	1E-04	NA	NA	2E-04	7E-07	3E-05	4E-06
XE 133	Ci	<1E-04	<1E-04	<1E-04	<1E-04	<1E-04	<1E-04	<1E-04	<1E-04

NOTE: ALL LESS THAN VALUES (<) ARE IN uCi/ml

SUPPLEMENTAL INFORMATION

FACILITY: TMI UNIT 1 LICENSE: DPR 50-289

1. REGULATORY LIMITS - - - REFER TO TMI OFFSITE DOSE CALCULATION MANUAL

A. FISSION AND ACTIVATION GASES:
B. IODINES:
C. PARTICULATES, HALF-LIVES > 8 DAYS:
D. LIQUID EFFLUENTS:

2. MAXIMUM EFFLUENT CONCENTRATIONS - - - TEN TIMES 10 CFR 20, APPENDIX B TABLE 2

PROVIDE THE MAXIMUM EFFLUENT CONCENTRATIONS USED IN DETERMINING ALLOWABLE RELEASE RATES OR CONCENTRATIONS.

A. FISSION AND ACTIVATION GASES:
B. IODINES:
C. PARTICULATES, HALF-LIVES > 8 DAYS:
D. LIQUID EFFLUENTS:

3. AVERAGE ENERGY

PROVIDE THE AVERAGE ENERGY (E-BAR) OF THE RADIONUCLIDE MIXTURE IN RELEASES OF FISSION AND ACTIVATION GASES, IF APPLICABLE

E-BAR BETA =	3.17E-01
E-BAR GAMMA =	5.64E-01
E-BAR BETA AND GAMMA =	8.81E-01

4. MEASUREMENTS AND APPROXIMATIONS OF TOTAL RADIOACTIVITY

PROVIDE THE METHODS USED TO MEASURE OR APPROXIMATE THE TOTAL RADIOACTIVITY IN EFFLUENTS AND THE METHODS USED TO DETERMINE RADIONUCLIDE COMPOSITION:

A. FISSION AND ACTIVATION GASES: HPGE SPECTROMETRY, LIQUID SCINTILLATION
B. IODINES: HPGE SPECTROMETRY
C. PARTICULATES HPGE SPECTROMETRY, GAS FLOW PROPORTIONAL, BETA SPECTROMETRY
D. LIQUID EFFLUENTS: HPGE SPECTROMETRY, LIQUID SCINTILLATION

5. BATCH RELEASES

PROVIDE THE FOLLOWING INFORMATION RELATING TO BATCH RELEASES OF RADIOACTIVITY MATERIALS IN LIQUID AND GASEOUS EFFLUENTS.

A. LIQUID (ALL TIMES IN MINUTES)	QUARTER 1	QUARTER 2	QUARTER 3	QUARTER 4
1. NUMBER OF BATCH RELEASES:	0	0	22	7
2. TOTAL TIME PERIOD FOR BATCH RELEASES:	0	0	6095	5017
3. MAXIMUM TIME PERIOD FOR A BATCH RELEASE:	0	0	350	925
4. AVERAGE TIME PERIOD FOR BATCH RELEASES:	0	0	277	717
5. MINIMUM TIME PERIOD FOR A BATCH RELEASE:	NA	NA	190	565
6. AVERAGE STREAM FLOW DURING PERIODS OF RELEASE				
OF EFFLUENT INTO A FLOWING STREAM: (CFM)	4E+06	3E+06	7E+05	1E+06

B. GASEOUS (ALL TIMES IN MINUTES)				
1. NUMBER OF BATCH RELEASES:	9	2	5	6
2. TOTAL TIME PERIOD FOR BATCH RELEASES:	144247	799	53230	84327
3. MAXIMUM TIME PERIOD FOR A BATCH RELEASE:	50400	790	40100	40300
4. AVERAGE TIME PERIOD FOR BATCH RELEASES:	16027	400	10646	14055
5. MINIMUM TIME PERIOD FOR A BATCH RELEASE:	2	9	730	710

6. ABNORMAL RELEASES

A. LIQUID				
1. NUMBER OF RELEASES:	-0-	-0-	-0-	-0-
2. TOTAL ACTIVITY RELEASED: (CURIES)	N/A	N/A	N/A	N/A

B. GASEOUS				
1. NUMBER OF RELEASES:	-0-	-0-	-0-	-0-
2. TOTAL ACTIVITY RELEASED: (CURIES)	N/A	N/A	N/A	N/A

TABLE 1A
EFFLUENT AND WASTE DISPOSAL ANNUAL REPORT
GASEOUS EFFLUENTS-SUMMATION OF ALL RELEASES
TMI-2

	UNITS	2000 1ST QUARTER	2000 2ND QUARTER	2000 3RD QUARTER	2000 4TH QUARTER	EST. TOTAL ERROR %
A. FISSION AND ACTIVATION GASES						
1. TOTAL RELEASE	Ci	<LLD	<LLD	<LLD	<LLD	25%
2. AVERAGE RELEASE RATE FOR PERIOD	uCi/sec	N/A	N/A	N/A	N/A	
3. PERCENT OF TECH SPEC LIMIT	%	*	*	*	*	
B. IODINES		NOT APPLICABLE FOR TMI-2				
C. PARTICULATES						
1. PARTICULATES WITH HALF-LIVES > 8 DAYS	Ci	<LLD	<LLD	<LLD	<LLD	25%
2. AVERAGE RELEASE RATE FOR PERIOD	uCi/sec	N/A	<N/A	<N/A	<N/A	
3. PERCENT OF TECH SPEC LIMIT	%	*	*	*	*	
4. GROSS ALPHA RADIOACTIVITY	Ci	<LLD	<LLD	<LLD	<LLD	
D. TRITIUM						
1. TOTAL RELEASE	Ci	2.27E-01	1.01E-01	6.15E-01	7.42E-01	25%
2. AVERAGE RELEASE RATE FOR PERIOD	uCi/sec	2.88E-02	1.29E-02	7.73E-02	9.33E-02	
3. PERCENT OF TECH SPEC LIMIT	%	*	*	*	*	
# BATCH RELEASES		0	0	0	0	

* % ODCM LIMITS: LISTED ON DOSE SUMMARY TABLE
NOTE: ALL LESS THAN (<) VALUES ARE IN uCi/ml

TABLE 1C
EFFLUENT AND WASTE DISPOSAL ANNUAL REPORT
GASEOUS EFFLUENTS-GROUND LEVEL RELEASES
TMI-2 2000

NUCLIDES RELEASED	UNIT	CONTINUOUS MODE		BATCH MODE		CONTINUOUS MODE		BATCH MODE	
		1ST QUARTER	2ND QUARTER	1ST QUARTER	2ND QUARTER	3RD QUARTER	4TH QUARTER	3RD QUARTER	4TH QUARTER
1. FISSION GASES									
KRYPTON-85	Ci	<8.E-6	<8.E-6	<8.E-6	<8.E-6	<8.E-6	<8.E-6	<8.E-6	<8.E-6
KRYPTON-85M	Ci	<5.E-8	<5.E-8	<5.E-8	<5.E-8	<5.E-8	<5.E-8	<5.E-8	<5.E-8
KRYPTON-87	Ci	<8.E-8	<8.E-8	<8.E-8	<8.E-8	<8.E-8	<8.E-8	<8.E-8	<8.E-8
KRYPTON-88	Ci	<1.E-7	<1.E-7	<1.E-7	<1.E-7	<1.E-7	<1.E-7	<1.E-7	<1.E-7
XENON-133	Ci	<8.E-8	<8.E-8	<8.E-8	<8.E-8	<8.E-8	<8.E-8	<8.E-8	<8.E-8
XENON-135	Ci	<5.E-8	<5.E-8	<5.E-8	<5.E-8	<5.E-8	<5.E-8	<5.E-8	<5.E-8
XENON-135M	Ci	<5.E-7	<5.E-7	<5.E-7	<5.E-7	<5.E-7	<5.E-7	<5.E-7	<5.E-7
XENON-138	Ci	<3.E-7	<3.E-7	<3.E-7	<3.E-7	<3.E-7	<3.E-7	<3.E-7	<3.E-7
AR-41	Ci	<1.E-4	<1.E-4	<1.E-4	<1.E-4	<1.E-4	<1.E-4	<1.E-4	<1.E-4
TOTAL FOR PERIOD	Ci	N/A	N/A	N/A	N/A	N/A	N/A	N/A	N/A
2. IODINES		NOT APPLICABLE TO TMI-2							
3. PARTICULATES									
STRONTIUM-90	Ci	<1.E-11	<1.E-11	N/A	N/A	<1.E-11	<1.E-11	N/A	N/A
COBALT 60	Ci	<1.E-10	<1.E-10	N/A	N/A	<1.E-10	<1.E-10	N/A	N/A
ANTIMONY 125	Ci	<1.E-10	<1.E-10	N/A	N/A	<1.E-10	<1.E-10	N/A	N/A
CESIUM-134	Ci	<1.E-10	<1.E-10	N/A	N/A	<1.E-10	<1.E-10	N/A	N/A
CESIUM-137	Ci	<1.E-10	<1.E-10	N/A	N/A	<1.E-10	<1.E-10	N/A	N/A
TOTAL FOR PERIOD	Ci	N/A	N/A	N/A	N/A	N/A	N/A	N/A	N/A
4. TRITIUM									
TRITIUM	Ci	2.27E-01	1.01E-01	<1E-6	<1E-6	6.15E-01	7.42E-01	<1E-6	<1E-6

NOTE: ALL LESS THAN (<) VALUES ARE IN uCi/ml

TABLE 2A
EFFLUENT AND WASTE DISPOSAL ANNUAL REPORT
LIQUID EFFLUENTS-SUMMATION OF ALL RELEASES
TMI-2

	UNITS	2000 1ST QUARTER	2000 2ND QUARTER	2000 3RD QUARTER	2000 4TH QUARTER	EST. TOTAL ERROR %
A. FISSION AND ACTIVATION PRODUCTS						
1. TOTAL RELEASES (NOT INCLUDING TRITIUM, GASES, ALPHA)	Ci	1.38E-05	1.92E-05	1.18E-05	<LLD	25%
2. AVERAGE DILUTED CONCENTRATION DURING PERIOD	uCi/ml	2.84E-12	3.93E-12	1.87E-12	N/A	
3. PERCENT OF APPLICABLE LIMIT	%	*	*	*	*	
B. TRITIUM						
1. TOTAL RELEASE	Ci	4.17E-06	1.17E-04	1.2E-04	<LLD	25%
2. AVERAGE DILUTED CONCENTRATION DURING PERIOD	uCi/ml	8.57E-13	2.40E-11	1.90E-11	N/A	
3. PERCENT OF APPLICABLE LIMIT	%	*	*	*	*	
C. DISSOLVED AND ENTRAINED GASES						
1. TOTAL RELEASE	Ci	<LLD	<LLD	<LLD	<LLD	25%
2. AVERAGE DILUTED CONCENTRATION DURING PERIOD	uCi/ml	N/A	N/A	N/A	N/A	
3. PERCENT OF APPLICABLE LIMIT	%	*	*	*	*	
D. GROSS ALPHA ACTIVITY						
1. TOTAL RELEASE	Ci	<LLD	<LLD	<LLD	<LLD	25%
E. VOLUME OF WASTE RELEASED (PRIOR TO DILUTION)	liters	1.31E+05	8.68E+03	1.13E+05	NONE	10%
F. VOLUME OF DILUTION WATER USED	liters	4.86E+09	4.87E+09	6.32E+09	5.51E+09	10%
NUMBER OF BATCH RELEASES		2	4	7	0	

* % ODCM LIMITS: LISTED ON DOSE SUMMARY TABLE
NOTE: ALL LESS THAN (<) VALUES ARE IN uCi/ml

TABLE 2B
EFFLUENT AND WASTE DISPOSAL ANNUAL REPORT
LIQUID EFFLUENTS
TMI-2
2000

		CONTINUOUS MODE		BATCH MODE		CONTINUOUS MODE		BATCH MODE	
NUCLIDES RELEASED	UNIT	1ST QUARTER	2ND QUARTER	1ST QUARTER	2ND QUARTER	3RD QUARTER	4TH QUARTER	3RD QUARTER	4TH QUARTER
CO 60	Ci	<5E-7	<5E-7	<5E-7	<5E-7	<5E-7	<5E-7	2.83E-7	<5E-7
SR 90	Ci	<5E-8	<5E-8	5E-8	3.82E-7	<5E-8	<5E-8	<5E-8	<5E-8
SB 125	Ci	<5E-7	<5E-7	<5E-7	<5E-7	<5E-7	<5E-7	<5E-7	<5E-7
CS 134	Ci	<5E-7	<5E-7	<5E-7	<5E-7	<5E-7	<5E-7	<5E-7	<5E-7
CS 137	Ci	<5E-7	<5E-7	1.38E-5	1.88E-5	<5E-7	<5E-7	1.16E-5	<5E-7
H-3	Ci	<1E-5	<1E-5	4.17E-6	1.17E-4	<1E-5	<1E-5	1.20E-4	<1E-5
TOTAL FOR PERIOD	Ci	0E+00	0E+00	1.80E-5	1.36E-4	0.E+00	0.E+00	1.32E-4	0E+00

NOTE: ALL LESS THAN VALUES (<) ARE IN uCi/ml

Attachment 2
2000 Annual Radioactive Effluent Releases Report for TMI
5928-01-20113

Solid Waste Shipped Offsite during 2000

TABLE 3A
EFFLUENT AND WASTE DISPOSAL ANNUAL REPORT
SOLID WASTE AND IRRADIATED FUEL SHIPMENTS

A. Solid waste shipped off-site for burial or disposal (not irradiated fuel)			
1. Type of waste	UNIT	12 month period	EST. Total Error %
a. Spent resins, filter sludges, Evaporator bottoms, etc.	m^3 Ci	58.9 m^3 203.6 Ci	25%
b. Dry compressible waste, contaminated equipment, etc.	m^3 Ci	72.5m^3 .092 Ci	25%
c. Irradiated components, control rods, etc.	m^3 Ci	N/A	N/A
d. Other (describe) :	m^3 Ci	N/A	N/A
2. Estimate of major nuclide composition (by type of waste)			
a. Fe55	6.43 %		
Cs137	37.3 %		
Ni63	6.17 %		
Cs134	40.7 %		
b. Ni63	34.7 %		
Cs137	36.0 %		
Co58	7.12 %		
Fe55	6.31 %		
Co60	3.81 %		
c. N/A			
d. N/A			
3. Solid Waste Disposition Number of Shipments	Mode of Transportation		Destination
See attached for this information			
B. Irradiated Fuel Shipments (Disposition)			
Number of Shipments	Mode of Transportation		Destination
N/A			

WASTE SHIPPED AS FOLLOWS

A.1.a

Eight(8)	Carbon Steel liners @206 ft3 each- Evaporator Bottoms
Two(2)	Stainless Steel Liners @ 215 ft3 each- Resin-Dewatered

A.1.b

Two(2)	Cargo Containers @ 1040 ft3 – noncompacted DAW

No. of Shipments	MODE OF TRANSPORTATION	DESTINATION
A.3.a		
One(1) Shipments	Tractor – Cask (14-215H)	Studsvik-Erwin, Tn
One(1) Shipments	Tractor – Cask (14-215H)	CNCF Barnwell, SC
Four(4) Shipments	Tractor – Flatbed	ATG-Oak Ridge,Tn
A.3.b		
One(1)Shipment	Tractor – Flatbed	ATG-Richland, WA

All shipments were Type A-LSA-II

Attachment 3
2000 Annual Radioactive Effluent Releases Report for TMI
5928-01-20113

Summary of Unplanned Releases from the TMI Site During 2000

There were no unplanned releases to unrestricted areas from either the TMI-1 or TMI-2 site during 2000.

Attachment 4
2000 Annual Radioactive Effluent Releases Report for TMI
5928-01-20113

Changes to the Process Control Program and the Offsite Dose Calculation Manual during 2000, And a listing of new locations for dose calculations and/or environmental monitoring identified by the land use census

1. Changes to the Process Control Program

There were no changes made to Process Control Program (PCP) documents in 2000.

2. Changes to the Offsite Dose Calculation Manual during 2000

The Offsite Dose Calculation Manual (ODCM) was modified once during 2000. This change did not reduce the accuracy or reliability of dose calculations or setpoint determinations. The level of effluent controls required by 10 CFR 20.1301, 40 CFR 190, 10 CFR 50.36a, and Appendix I to 10 CFR 50 was not reduced and the accuracy or reliability of effluent, dose or setpoint calculations was not adversely impacted for the reasons stated below.

Revision 20 of the ODCM was issued on November 8, 2000. Revision 20 made the following changes to the ODCM:

- This PCR was submitted to add station K15-3 and delete station K15-2. Station K15-3 is a new control milk station being added because the station at K15-2 is ceasing dairy operations.

3. A listing of new locations for dose calculations and/or environmental monitoring identified by the land use census

Based on the results of the 2000 Three Mile Island Nuclear Station land use census, there were no locations identified that yielded a calculated dose or dose commitment greater than the values currently being calculated in ODCM Part I Surveillance 3.2.2.3.1. Additionally, there were no locations identified that yielded a calculated dose or dose commitment 20% greater than at a location from which samples are currently being obtained in accordance with ODCM Part III Table 8.1.

Attachment 5
2000 Annual Radioactive Effluent Releases Report for TMI
5928-01-20113

Instrumentation not returned to Operable status within 30 days during 2000

There was no instrumentation not returned to operable status within 30 days per the TMI ODCM Part 1, Sections 2.1.1.b and 2.1.2.b and Part 2, Section 2.1.2.b during 2000.

Attachment 6
2000 Annual Radioactive Effluent Releases Report for TMI
5928-01-20113

Annual Summary of Hourly Meteorological Data for 2000

THREE MILE ISLAND METEROLOGICAL DATA
2000 JOINT FREQUENCY TABLES

HOURS AT EACH WIND SPEED AND DIRECTION
PERIOD OF RECORD: JANUARY 1, 2000 TO DECEMBER 31, 2000
STABILITY CLASS: A
SENSOR HEIGHT: 100 FT

SECTOR WINDS TO	FROM	WIND SPEED 1-3	4-7	8-12	13-18	19-24	>24	TOTAL
N	S	8	20	11	2	1	0	42
NNE	SSW	9	49	47	7	0	0	112
NE	SW	24	39	16	2	0	0	81
ENE	WSW	19	27	11	0	0	0	57
E	W	16	23	24	10	0	0	73
ESE	WNW	33	59	39	9	3	0	143
SE	NW	41	100	42	20	5	1	209
SSE	NNW	49	91	28	8	3	5	184
S	N	15	30	3	0	0	0	48
SSW	NNE	7	12	0	0	0	0	19
SW	NE	4	17	6	0	0	0	27
WSW	ENE	1	18	7	0	0	0	26
W	E	14	12	20	2	0	0	48
WNW	ESE	9	26	27	3	0	0	65
NW	SE	5	23	8	0	0	0	36
NNW	SSE	5	23	4	0	0	0	32
TOTAL		259	569	293	63	12	6	1202

THREE MILE ISLAND METEROLOGICAL DATA
2000 JOINT FREQUENCY TABLES

HOURS AT EACH WIND SPEED AND DIRECTION
PERIOD OF RECORD: JANUARY 1, 2000 TO DECEMBER 31, 2000
STABILITY CLASS: B
SENSOR HEIGHT: 100 FT

SECTOR WINDS TO	FROM	WIND SPEED 1-3	4-7	8-12	13-18	19-24	>24	TOTAL
N	S	2	10	8	6	1	0	27
NNE	SSW	3	12	17	2	0	0	34
NE	SW	5	9	7	1	0	0	22
ENE	WSW	1	2	5	3	0	0	11
E	W	4	10	17	11	1	0	43
ESE	WNW	6	25	23	17	3	0	74
SE	NW	8	29	34	25	5	0	101
SSE	NNW	9	13	16	10	2	0	50
S	N	3	16	0	0	0	0	19
SSW	NNE	1	3	0	0	0	0	4
SW	NE	0	3	1	0	0	0	4
WSW	ENE	6	3	1	0	0	0	10
W	E	8	8	9	0	0	0	25
WNW	ESE	1	10	6	2	0	0	19
NW	SE	4	2	4	1	0	0	11
NNW	SSE	2	4	2	0	0	0	8
TOTAL		63	159	150	78	12	0	462

THREE MILE ISLAND METEROLOGICAL DATA
2000 JOINT FREQUENCY TABLES

HOURS AT EACH WIND SPEED AND DIRECTION
PERIOD OF RECORD: JANUARY 1, 2000 TO DECEMBER 31, 2000
STABILITY CLASS: C
SENSOR HEIGHT: 100 FT

SECTOR TO	WINDS FROM	WIND SPEED 1-3	4-7	8-12	13-18	19-24	>24	TOTAL
N	S	2	3	1	4	0	0	10
NNE	SSW	4	9	4	0	0	0	17
NE	SW	4	2	3	0	0	0	9
ENE	WSW	1	6	2	2	1	0	12
E	W	3	4	10	4	1	0	22
ESE	WNW	0	4	11	17	7	0	39
SE	NW	2	10	11	14	6	0	43
SSE	NNW	5	5	11	4	2	0	27
S	N	1	5	0	0	0	0	6
SSW	NNE	4	4	1	0	0	0	9
SW	NE	4	1	0	0	0	0	5
WSW	ENE	3	7	1	0	0	0	11
W	E	3	5	6	0	0	0	14
WNW	ESE	3	14	7	0	0	0	24
NW	SE	2	6	5	0	0	0	13
NNW	SSE	0	4	0	0	0	0	4
TOTAL		41	89	73	45	17	0	265

THREE MILE ISLAND METEROLOGICAL DATA
2000 JOINT FREQUENCY TABLES

HOURS AT EACH WIND SPEED AND DIRECTION
PERIOD OF RECORD: JANUARY 1, 2000 TO DECEMBER 31, 2000
STABILITY CLASS: D
SENSOR HEIGHT: 100 FT

SECTOR WINDS TO	FROM	WIND SPEED 1-3	4-7	8-12	13-18	19-24	>24	TOTAL
N	S	9	55	47	9	0	0	120
NNE	SSW	12	79	28	12	1	0	132
NE	SW	33	48	23	1	0	0	105
ENE	WSW	26	51	22	3	1	0	103
E	W	39	79	127	54	8	2	309
ESE	WNW	31	101	189	126	29	2	478
SE	NW	43	100	142	118	33	2	438
SSE	NNW	59	84	39	21	3	1	207
S	N	36	85	19	3	0	0	143
SSW	NNE	42	31	4	0	0	0	77
SW	NE	32	53	7	0	0	0	92
WSW	ENE	47	65	15	1	0	0	128
W	E	66	96	97	5	0	0	264
WNW	ESE	28	92	112	7	0	0	239
NW	SE	27	60	29	1	0	0	117
NNW	SSE	19	57	10	0	0	0	86
TOTAL		549	1136	910	361	75	7	3038

THREE MILE ISLAND METEROLOGICAL DATA
2000 JOINT FREQUENCY TABLES

HOURS AT EACH WIND SPEED AND DIRECTION
PERIOD OF RECORD: JANUARY 1, 2000 TO DECEMBER 31, 2000
STABILITY CLASS: E
SENSOR HEIGHT: 100 FT

SECTOR TO	WINDS FROM	WIND SPEED 1-3	4-7	8-12	13-18	19-24	>24	TOTAL
N	S	28	58	29	5	2	0	122
NNE	SSW	26	82	43	2	1	0	154
NE	SW	53	81	21	6	0	0	161
ENE	WSW	63	57	11	0	0	0	131
E	W	81	92	38	4	1	0	216
ESE	WNW	66	89	81	33	4	1	274
SE	NW	69	63	53	43	9	2	239
SSE	NNW	68	67	11	3	1	0	150
S	N	55	70	10	0	0	0	135
SSW	NNE	29	38	1	0	0	0	68
SW	NE	40	40	1	0	0	0	81
WSW	ENE	48	43	2	0	0	0	93
W	E	62	54	14	2	0	0	132
WNW	ESE	35	43	7	1	0	0	86
NW	SE	36	22	1	0	0	0	59
NNW	SSE	16	36	1	0	0	0	53
TOTAL		775	935	324	99	18	3	2154

THREE MILE ISLAND METEROLOGICAL DATA
2000 JOINT FREQUENCY TABLES

HOURS AT EACH WIND SPEED AND DIRECTION
PERIOD OF RECORD: JANUARY 1, 2000 TO DECEMBER 31, 2000
STABILITY CLASS: F
SENSOR HEIGHT: 100 FT

SECTOR WINDS TO	FROM	WIND SPEED 1-3	4-7	8-12	13-18	19-24	>24	TOTAL
N	S	25	11	4	1	0	0	41
NNE	SSW	29	27	4	1	0	0	61
NE	SW	39	21	5	0	0	0	65
ENE	WSW	41	18	0	0	0	0	59
E	W	52	13	2	0	0	0	67
ESE	WNW	50	11	2	0	0	0	63
SE	NW	57	24	3	0	0	0	84
SSE	NNW	42	42	2	1	0	0	87
S	N	26	26	2	0	0	0	54
SSW	NNE	25	5	0	0	0	0	30
SW	NE	20	9	0	0	0	0	29
WSW	ENE	25	10	0	0	0	0	35
W	E	44	20	0	0	0	0	64
WNW	ESE	63	13	2	0	0	0	78
NW	SE	41	1	0	0	0	0	42
NNW	SSE	34	8	0	0	0	0	42
TOTAL		613	259	26	3	0	0	901

THREE MILE ISLAND METEROLOGICAL DATA
2000 JOINT FREQUENCY TABLES

HOURS AT EACH WIND SPEED AND DIRECTION
PERIOD OF RECORD: JANUARY 1, 2000 TO DECEMBER 31, 2000
STABILITY CLASS: G
SENSOR HEIGHT: 100 FT

SECTOR TO	WINDS FROM	WIND SPEED 1-3	4-7	8-12	13-18	19-24	>24	TOTAL
N	S	16	4	1	0	0	0	21
NNE	SSW	35	12	1	0	0	0	48
NE	SW	24	9	0	0	0	0	33
ENE	WSW	37	9	1	0	0	0	47
E	W	29	16	0	0	0	0	45
ESE	WNW	21	8	0	0	0	0	29
SE	NW	22	12	2	0	0	0	36
SSE	NNW	21	19	1	0	0	0	41
S	N	27	5	0	0	0	0	32
SSW	NNE	12	2	0	0	0	0	14
SW	NE	15	2	0	0	0	0	17
WSW	ENE	16	5	0	0	0	0	21
W	E	17	12	0	0	0	0	29
WNW	ESE	23	4	0	0	0	0	27
NW	SE	17	1	0	0	0	0	18
NNW	SSE	22	2	0	0	0	0	24
TOTAL		354	122	6	0	0	0	482

THREE MILE ISLAND METEROLOGICAL DATA
2000 JOINT FREQUENCY TABLES

HOURS AT EACH WIND SPEED AND DIRECTION
PERIOD OF RECORD: JANUARY 1, 2000 TO DECEMBER 31, 2000
STABILITY CLASS: ALL
SENSOR HEIGHT: 100 FT

SECTOR TO	WINDS FROM	WIND SPEED 1-3	4-7	8-12	13-18	19-24	>24	TOTAL
N	S	90	161	101	27	4	0	383
NNE	SSW	118	270	144	24	2	0	558
NE	SW	182	209	75	10	0	0	476
ENE	WSW	188	170	52	8	2	0	420
E	W	224	237	218	83	11	2	775
ESE	WNW	207	297	345	202	46	3	1100
SE	NW	242	338	287	220	58	5	1150
SSE	NNW	253	321	108	47	11	6	746
S	N	163	237	34	3	0	0	437
SSW	NNE	120	95	6	0	0	0	221
SW	NE	115	125	15	0	0	0	255
WSW	ENE	146	151	26	1	0	0	324
W	E	214	207	146	9	0	0	576
WNW	ESE	162	202	161	13	0	0	538
NW	SE	132	115	47	2	0	0	296
NNW	SSE	98	134	17	0	0	0	249
TOTAL		2654	3269	1782	649	134	16	8504

(Hours of Missing/Invalid Data: 280)

Attachment 7
2000 Annual Radioactive Effluent Releases Report for TMI
5928-01-20113

Assessment of Radiation Doses Due to Radioactive Liquid and Gaseous Effluents Released from TMI during 2000

TMI-1

The attached table presents the maximum hypothetical doses to an individual and the general population resulting from 2000 TMI-1 releases of gaseous and liquid effluents. Provided below is a brief explanation of the table.

A. Liquid (Individual)

Calculations were performed on the four age groups and eight organs recommended in Regulatory Guide 1.109. The pathways considered for TMI-1 were the consumption of drinking water and fish and standing on the shoreline influenced by TMI-1 effluents. The latter two pathways are considered to be the primary recreational activities associated with the Susquehanna River in the vicinity of TMI.

The "critical receptor" or Receptor 1 was that individual who 1) consumed Susquehanna River water from the nearest downstream drinking water supplier (Wrightsville Water Supply), 2) consumed fish residing in the vicinity of the TMI-1 liquid discharge outfall and 3) occupied an area of shoreline influenced by the TMI-1 liquid discharge.

For 2000, the calculated maximum whole body (or total body) dose from TMI-1 liquid effluents was 3.57E-2 mrem to an adult (line 1). The maximum organ dose was 5.18E-2 mrem to the liver of a teen (line 2).

B. Gaseous (Individual)

There were six major pathways considered in the dose calculations for TMI-1 gaseous effluents. These were: (1) plume exposure (2) inhalation, consumption of; (3) cow milk, (4) vegetables and fruits, (5) meat, and (6) standing on contaminated ground. Real-time meteorology was used in all dose calculations for gaseous effluents.

Lines 3 and 4 present the maximum plume exposure at or beyond the site boundary. The notation of "air dose" is interpreted to mean that these doses are

not to an individual, but are considered to be the maximum doses that would have occurred at or beyond the site boundary. The table presents the distance in meters to the location in the affected sector (compass point) where the theoretical maximum plume exposures occurred. The calculated maximum plume exposures were 2.96E-5 mrad and 1.51E-4 mrad for gamma and beta, respectively.

The maximum organ dose due to the release of iodines, particulates and tritium from TMI-1 in 2000 was 1.61E-2 mrem to the thyroid of an infant residing 2150 2000 meters from the site in the NNE sector (line 5). This dose again reflects the maximum exposed organ for the appropriate age group.

C. Liquid and Gaseous (Population)

Lines 6 - 9 present the person-rem doses resulting from 2000 TMI-1 liquid and gaseous effluents. These doses were summed over all pathways and the affected populations. The person-rem doses from liquid effluents were based upon the population encompassed within the region from the TMI-1 outfall extending down to the Chesapeake Bay (approximately 5,000,000 people). The person-rem doses from gaseous effluents were based upon the 1980 population and considered the population out to a distance of 50 miles around TMI (approximately 2,200,000 people). Population doses were summed over all distances and sectors to give an aggregate dose.

The calculated maximum whole body dose to the affected population from TMI-1 liquid effluents was 2.34E0 person-rem. The maximum critical organ population dose from liquid effluents was 2.34E0 person-rem to the liver. TMI-1 gaseous effluents resulted in a whole body population dose of 1.83E-1 person-rem and a maximum critical organ population dose of 2.82E-1 person-rem to the thyroid.

For 2000, TMI-1 liquid and gaseous effluents resulted in maximum hypothetical doses that were a small fraction of the quarterly and yearly ODCM dose limits.

TMI-1
SUMMARY OF MAXIMUM INDIVIDUAL DOSES FOR TMI-1 FROM
January 1, 2000 through December 31, 2000

Effluent	Applicable Organ	Estimated Dose (mrem)	Age Group	Location Dist (m)	Location Dir (toward)	% of ODCM Dose Limit Quarter	% of ODCM Dose Limit Annual	ODCM Dose Limit (mrem) Quarter	ODCM Dose Limit (mrem) Annual
(1) Liquid	Total Body	3.57E-2	Adult	Receptor 1		2.38E0	1.19E0	1.5	3
(2) Liquid	Liver	5.18E-2	Teen	Receptor 1		1.04E0	5.18E-1	5	10
(3) Noble Gas	Air Dose (gamma-mrad)	2.96E-5	---	610	SSE	5.92E-4	2.96E-4	5	10
(4) Noble Gas	Air Dose (beta-mrad)	1.51E-4	---	610	SSE	1.51E-3	7.55E-4	10	20
(5) Iodine, Tritium & Particulates	Thyroid	1.61E-2	Infant	2150	NNE	2.15E-1	1.07E-1	7.5	15

SUMMARY OF MAXIMUM POPULATION DOSES FOR TMI-1 FROM
January 1, 2000 through December 31, 2000

Effluent	Applicable Organ	Estimated Population Dose (person-rem)
(6) Liquid	Total Body	2.34E0
(7) Liquid	Liver	2.34E0
(8) Gaseous	Total Body	1.83E-1
(9) Gaseous	Thyroid	2.82E-1

TMI-2

The attached table presents the maximum hypothetical doses to an individual and the general population resulting from 2000 TMI-2 releases of gaseous and liquid effluents. Provided below is a brief explanation of the table.

A. Liquid (Individual)

Calculations were performed on the four age groups and eight organs recommended in Regulatory Guide 1.109. The pathways considered for TMI-2 were the consumption of drinking water and fish and standing on the shoreline influenced by TMI-2 effluents. The latter two pathways are considered to be the primary recreational activities associated with the Susquehanna River in the vicinity of TMI. The "critical receptor" or Receptor 1 was that individual who 1) consumed Susquehanna River water from the nearest downstream drinking water supplier (Wrightsville Water Supply), 2) consumed fish residing in the vicinity of the TMI-2 liquid discharge outfall and 3) occupied an area of shoreline influenced by the TMI-2 liquid discharge.

For 2000, the calculated maximum whole body (or total body) dose from TMI-2 liquid effluents was 1.27E-3 mrem to an adult (line 1). The maximum organ dose was 2.01E-3 mrem to the liver of a teen (line 2).

B. Gaseous (Individual)

There were six major pathways considered in the dose calculations for TMI-2 gaseous effluents. These were: (1) plume exposure (2) inhalation, consumption of; (3) cow milk, (4) vegetables and fruits, (5) meat, and (6) standing on contaminated ground. Real-time meteorology was used in all dose calculations for gaseous effluents.

Since there were no noble gases released from TMI-2 during 2000, the gamma and beta air doses (lines 3 and 4, respectively) were zero.

The maximum organ dose due to the release of particulates and tritium from TMI-2 in 2000 was 4.56E-5 mrem to the liver, total body, thyroid, kidney, lung and GI tract of a child residing 2000 meters from the site in the SE sector (line 5).

C. Liquid and Gaseous (Population)

Lines 6 - 9 present the person-rem doses resulting from 2000 TMI-2 liquid and gaseous effluents. These doses were summed over all pathways and the affected populations. The person-rem doses from liquid effluents were based upon the population encompassed within the region from the TMI-2 outfall extending down to the Chesapeake Bay (approximately 5,000,000 people). The person-rem doses from gaseous effluents were based upon the 1980 population and considered the population out to a distance of 50 miles around TMI

(approximately 2,200,000 people). Population doses were summed over all distances and sectors to give an aggregate dose.

The calculated maximum whole body dose to the affected population from TMI-2 liquid effluents was 2.59E-4 person-rem. The maximum critical organ population dose from liquid effluents was 5.30E-4 person-rem to the bone. TMI-2 gaseous effluents resulted in a whole body population dose of 3.46E-3 person-rem and a maximum critical organ population dose of 3.46E-3 person-rem to the liver, thyroid, kidney, lung and GI tract.

For 2000, TMI-2 liquid and gaseous effluents resulted in maximum hypothetical doses that were a small fraction of the quarterly and yearly ODCM dose limits.

TMI-2
SUMMARY OF MAXIMUM INDIVIDUAL DOSES FOR TMI-2 FROM
January 1, 2000 through December 31, 2000

Effluent	Applicable Organ	Estimated Dose (mrem)	Age Group	Location Dist (m)	Location Dir (toward)	% of ODCM Dose Limit Quarter	% of ODCM Dose Limit Annual	ODCM Dose Limit (mrem) Quarter	ODCM Dose Limit (mrem) Annual
(1) Liquid	Total Body	1.27E-3	Adult	Receptor 1		8.47E-2	4.23E-2	1.5	3
(2) Liquid	Liver	2.01E-3	Teen	Receptor 1		4.02E-2	2.01E-2	5	10
(3) Noble Gas	Air Dose (gamma-mrad)	0	---	---	---	0	0	5	10
(4) Noble Gas	Air Dose (beta-mrad)	0	---	---	---	0	0	10	20
(5) Tritium & Particulate	Liver, Total Body, Thyroid, Kidney, Lung & GI Tract	4.56E-5	Child	2000	SE	6.08E-4	3.04E-4	7.5	15

SUMMARY OF MAXIMUM POPULATION DOSES FOR TMI-2 FROM
January 1, 2000 through December 31, 2000

Effluent	Applicable Organ	Estimated Population Dose (person-rem)
(6) Liquid	Total Body	2.59E-4
(7) Liquid	Bone	5.30E-4
(8) Gaseous	Total Body	3.46E-3
(9) Gaseous	Liver, Thyroid, Kidney, Lung & GI Tract	3.46E-3

Attachment 8
2000 Annual Radioactive Effluent Releases Report for TMI
5928-01-20113

Assessment of Radiation Doses from Liquid and Gaseous Effluents Releases to Members of the Public within the TMI Site Boundaries during 2000

The Offsite Dose Calculation Manual requires an assessment of the radiation doses from radioactive liquid and gaseous effluents to members of the public due to their activities inside the site boundary during the reporting period. The public did not have unrestricted access to the TMI site during 2000. Therefore no assessment of this dose is applicable.

Attachment 9
2000 Annual Radioactive Effluent Releases Report for TMI
5928-01-20113

Assessment of Radiation Dose to Most Likely Exposed Real Individual per 40 CFR 190

Dose calculations were performed to demonstrate compliance with 40 CFR 190 (ODCM Part IV Section 2.10). Gaseous and liquid effluents released from TMI-1 and TMI-2 in 2000 resulted in maximum individual doses (regardless of age group) of 0.02 mrem to the thyroid and 0.06 mrem to any other organ including the whole (total) body. The direct radiation component was determined using the highest quarterly fence-line exposure rate as measured by an environmental TLD, and subtracting from it, the lowest quarterly environmental TLD exposure rate.

Based on the maximum exposure rate of 8.5 mR/standard month, a person residing at the fence-line for 67 hours (shoreline exposure from Reg. Guide 1.109) received an exposure of 0.78 mR. Based on the lowest exposure rate of 3.2 mR/standard month and converting it by the same method yielded a background exposure of 0.29 mR. Therefore, the net exposure from direct radiation from TMINS was 0.49 mR. Combining the direct radiation exposure (assumed to be equal to dose) with the maximum organ doses from liquid and gaseous releases, the maximum potential (total) doses were 0.51 mrem to the thyroid and 0.55 mrem to any other organ. Both doses were well below the limits specified in 40 CFR 190.

Attachment 10
2000 Annual Radioactive Effluent Releases Report for TMI
5928-01-20113

Deviation from the ODCM Sampling and Analysis Regime during 2000

There were no deviations from the effluent sampling and analysis regime specified in the TMI Offsite Dose Calculation Manual during 2000.

Enclosure 1
2000 Annual Radioactive Effluent Releases Report for TMI
5928-01-20113

TMI Offsite Dose Calculation Manual, Revision 20
6610-PLN-4200.01

(Revision 20 was issued on
November 8,2000)

AmerGen	TMI - Unit 1 Radiological Controls Procedure	Number 6610-PLN-4200.01
Title **Offsite Dose Calculation Manual (ODCM)**		Revision No. 20
Applicability/Scope TMI Division	USAGE LEVEL 3	Effective Date NOV 8 2000

This document is within QA plan scope	X	Yes		No
Safety Reviews Required	X	Yes		No

List of Effective Pages

Page	Revision	Page	Revision	Page	Revision	Page	Revision
1	20	21	20	41	20	61	20
2	20	22	20	42	20	62	20
3	20	23	20	43	20	63	20
4	20	24	20	44	20	64	20
5	20	25	20	45	20	65	20
6	20	26	20	46	20	66	20
7	20	27	20	47	20	67	20
8	20	28	20	48	20	68	20
9	20	29	20	49	20	69	20
10	20	30	20	50	20	70	20
11	20	31	20	51	20	71	20
12	20	32	20	52	20	72	20
13	20	33	20	53	20	73	20
14	20	34	20	54	20	74	20
15	20	35	20	55	20	75	20
16	20	36	20	56	20	76	20
17	20	37	20	57	20	77	20
18	20	38	20	58	20	78	20
19	20	39	20	59	20	79	20
20	20	40	20	60	20	80	20

HISTORY ONE

	Signature	Date
Originator	T. A. Bradley T.A. Bradley	11/7/00
Procedure Owner	/s/ B. A. Parfitt	10/03/00
PRG	/s/ H. K. Olive for J. S. Schork	10/10/00
Approver	/s/ J. Telfer	10/10/00

List of Effective Pages

Page	Revision	Page	Revision	Page	Revision	Page	Revision
81	20	121	20	161	20		
82	20	122	20	162	20		
83	20	123	20	163	20		
84	20	124	20	164	20		
85	20	125	20	165	20		
86	20	126	20	166	20		
87	20	127	20	167	20		
88	20	128	20	168	20		
89	20	129	20	169	20		
90	20	130	20	170	20		
91	20	131	20	171	20		
92	20	132	20	172	20		
93	20	133	20	173	20		
94	20	134	20	174	20		
95	20	135	20	175	20		
96	20	136	20	176	20		
97	20	137	20	177	20		
98	20	138	20	178	20		
99	20	139	20	179	20		
100	20	140	20	180	20		
101	20	141	20	181	20		
102	20	142	20	182	20		
103	20	143	20	183	20		
104	20	144	20	184	20		
105	20	145	20	185	20		
106	20	146	20	186	20		
107	20	147	20	187	20		
108	20	148	20	188	20		
109	20	149	20	189	20		
110	20	150	20	190	20		
111	20	151	20	191	20		
112	20	152	20	192	20		
113	20	153	20	193	20		
114	20	154	20	194	20		
115	20	155	20	195	20		
116	20	156	20	196	20		
117	20	157	20				
118	20	158	20				
119	20	159	20				
120	20	160	20				

HISTORY INFO

INTRODUCTION

The OFFSITE DOSE CALCULATION MANUAL (ODCM) is a supporting document of the GPUNC Three Mile Island Nuclear Station (TMINS) Unit 1 and Unit 2 PDMS Technical Specifications and implements TMI radiological effluent controls. The ODCM contains the controls, bases, and surveillance requirements for liquid and gaseous radiological effluents. In addition, the ODCM describes the methodology and parameters to be used in the calculation of off-site doses due to radioactive liquid and gaseous effluents. This document also describes the methodology used for calculation of the liquid and gaseous effluent monitoring instrumentation alarm/trip set points. Liquid and Gaseous Radwaste Treatment System configurations are also included.

The ODCM also is used to define the requirements for the TMINS radiological environmental monitoring program (REMP) and contains a list and graphical description of the specific sample locations used in the REMP.

The ODCM is maintained at the Three Mile Island (TMI) site for use as a reference guide and training document of accepted methodologies and calculations. Changes in the calculation methods or parameters will be incorporated into the ODCM to ensure the ODCM represents the present methodology in all applicable areas. GPUNC initiated changes to the ODCM will be implemented in accordance with the TMI-1 and TMI-2 PDMS Technical Specifications.

The ODCM follows the methodology and models suggested by NUREG-0133, and Regulatory Guide 1.109, Revision 1 for calculation of off-site doses due to plant effluent releases. Simplifying assumptions have been applied in this manual where applicable to provide a more workable document for implementation of the Radiological Effluent Controls requirements.

GPUN implements the TMI Radiological Effluent Controls Program and Regulatory Guide 1.21, Revision 1 (Annual Radioactive Effluent Release Report) requirements by use of a computerized system used to determine TMI effluent releases and to update cumulative effluent doses.

HISTORY INFO

TABLE OF CONTENTS

PART I TMI-1 RADIOLOGICAL EFFLUENT CONTROLS

Section		Page
1.0	**DEFINITIONS**	15
	Table 1-1, Frequency Notations	19
2.0	**RADIOLOGICAL EFFLUENT CONTROLS AND BASES**	21
2.1	Radioactive Effluent Instrumentation	21
2.1.1	Radioactive Liquid Effluent Instrumentation	21
2.1.2	Radioactive Gaseous Process and Effluent Monitoring Instrumentation	23
	Table 2.1-1, Radioactive Liquid Effluent Instrumentation	22
	Table 2.1-2, Radioactive Gaseous Process and Effluent Monitoring Instrumentation	24
2.2	Radiological Effluent Controls	30
2.2.1	Liquid Effluent Controls	65
2.2.2	Gaseous Effluent Controls	68
2.2.3	Total Radioactive Effluent Controls	39
3.0	**SURVEILLANCES**	41
3.1	Radioactive Effluent Instrumentation	41
3.1.1	Radioactive Liquid Effluent Instrumentation	41
3.1.2	Radioactive Gaseous Process and Effluent Monitoring Instrumentation	44
	Table 3.1-1, Radioactive Liquid Effluent Monitoring Instrumentation Surveillance Requirements	42
	Table 3.1-2, Radioactive Gaseous Process and Effluent Monitoring Instrumentation Surveillance Requirements	45
3.2	Radiological Effluents	49
3.2.1	Liquid Effluents	49
3.2.2	Gaseous Effluents	53

HISTORY INFO

TABLE OF CONTENTS (Cont'd)

PART I TMI-1 RADIOLOGICAL EFFLUENT CONTROLS

Section		Page
	Table 3.2-1, Radioactive Liquid Waste Sampling and Analysis Program	50
	Table 3.2-2, Radioactive Gaseous Waste Sampling and Analysis Program	55
	3.2.3 Total Radioactive Effluents	59
4.0	PART I REFERENCES	60

HISTORY INFO

TABLE OF CONTENTS (Cont'd)

PART II TMI-2 RADIOLOGICAL EFFLUENT CONTROLS

Section		Page
1.0	DEFINITIONS	62
	Table 1.1, Frequency Notation	64
2.0	RADIOLOGICAL EFFLUENT CONTROLS AND BASES	65
2.1	Radioactive Effluent Instrumentation	65
2.1.1	Radioactive Liquid Effluent Instrumentation	21
2.1.2	Radioactive Gaseous Process and Effluent Monitoring Instrumentation	65
	Table 2.1.2, Radioactive Gaseous Process and Effluent Monitoring Instrumentation	67
2.2	Radioactive Effluent Controls	68
2.2.1	Liquid Effluent Controls	68
2.2.2	Gaseous Effluent Controls	71
2.2.3	Total Radioactive Effluent Controls	76
3.0	SURVEILLANCES	78
3.1	Radioactive Effluent Instrumentation	78
3.1.1	Radioactive Liquid Effluent Instrumentation	78
3.1.2	Radioactive Gaseous Process and Effluents Monitoring Instrumentation	78
	Table 3.1-2, Radioactive Gaseous Process and Effluent Monitoring Instrumentation Surveillance Requirements	79
3.2	Radiological Effluents	80
3.2.1	Liquid Effluents	80
3.2.2	Gaseous Effluents	82
	Table 3.2-1, Radioactive Liquid Waste Sampling and Analysis Program	81
	Table 3.2-2, Radioactive Gaseous Waste Sampling and Analysis Program	83
3.2.3	Total Radioactive Effluents	86

HISTORY INFO

TABLE OF CONTENTS (Cont'd)

PART II TMI-2 RADIOLOGICAL EFFLUENT CONTROLS

Section		Page
4.0	PART II REFERENCES	87

HISTORY INFO

TABLE OF CONTENTS (Cont'd)

PART III EFFLUENT DATA AND CALCULATIONAL METHODOLOGIES

Section		Page
1.0	LIQUID EFFLUENT MONITORS	89
1.1	TMI-1 and TMI-2 Liquid Radiation Monitor Set Points	41
1.2	TMI Liquid Release Points and Liquid Radiation Monitor Data	44
1.3	Control of Liquid Releases	92
2.0	LIQUID EFFLUENT DOSE ASSESSMENT	97
2.1	Liquid Effluents - 10 CFR 50 Appendix I	49
2.2	TMI Liquid Radwaste System Dose Calcs Once per Month	53
2.3	Alternative Dose Calculational Methodology	59
3.0	LIQUID EFFLUENT WASTE TREATMENT SYSTEM	104
3.1	TMI-1 Liquid Effluent Waste Treatment System	104
3.2	Operability of TMI-1 Liquid Effluent Waste Treatment System	105
3.3	TMI-2 Liquid Effluent Waste Treatment System	105
4.0	GASEOUS EFFLUENT MONITORS	108
4.1	TMI-1 Noble Gas Monitor Set Points	108
4.2	TMI-1 Particulate and Radioiodine Monitor Set Points	110
4.3	TMI-2 Gaseous Radiation Monitor Set Points	111
4.4	TMI-1 Gaseous Effluent Release Points and Gaseous Radiation Monitor Data	112
4.5	TMI-2 Gaseous Effluent Release Points and Gaseous Radiation Monitor Data	114
4.6	Control of Gaseous Effluent Releases	115

HISTORY INFO

TABLE OF CONTENTS (Cont'd)

PART III EFFLUENT DATA AND CALCULATIONAL METHODOLOGIES

Section		Page
5.0	GASEOUS EFFLUENT DOSE ASSESSMENT	127
5.1	Gaseous Effluents - Dose Rate Limits	127
5.1.1	Noble Gases	127
5.1.1.1	Total Body	127
5.1.1.2	Skin	128
5.1.2	Iodines and Particulates	129
5.2	Gaseous Effluents - 10 CFR 50 Appendix I	130
5.2.1	Noble Gases	130
5.2.2	Iodines and Particulates	131
5.3	Gaseous Radioactive System Dose Calculations Once per Month	133
5.4	Alternative Dose Calculational Methodologies	134
6.0	GASEOUS EFFLUENT WASTE TREATMENT SYSTEM	156
6.1	Description of the TMI-1 Gaseous Radwaste Treatment System	156
6.2	Operability of the TMI-1 Gaseous Radwaste Treatment System	156
7.0	EFFLUENT TOTAL DOSE ASSESSMENT	158
8.0	TMINS RADIOLOGICAL ENVIRONMENTAL MONITORING PROGRAM (REMP)	159
8.1	Monitoring Program Requirements	159
8.2	Land Use Census	161
8.3	Interlaboratory Comparison Program	163
9.0	PART III REFERENCES	179

HISTORY INFO

TABLE OF CONTENTS (Cont'd)

PART III EFFLUENT DATA AND CALCULATIONAL METHODOLOGIES

Section		Page
TABLES		
Table 1.1	TMI-1 Liquid Release Point and Liquid Radiation Monitor Data	93
Table 1.2	TMI-2 Sump Capacities	94
Table 2.1	Liquid Dose Conversion Factors (DCF): DF_{ij}	100
Table 2.2	Bioaccumulation Factors, BF_i	103
Table 4.1	TMI-1 Gaseous Release Point & Gaseous Radiation Monitor Data	116
Table 4.2	TMI-2 Gaseous Release Point & Gaseous Radiation Monitor Data	117
Table 4.3	Dose Factors for Noble Gases and Daughters	118
Table 4.4	Atmospheric Dispersion Factors for Three Mile Island - Station Vent	119
Table 4.5	Atmospheric Dispersion Factors for Three Mile Island - Ground Release	120
Table 4.6	Dose Parameters for Radioiodines and Radioactive Particulate, Gaseous, Effluents	121
Table 5.2.1	Pathway Dose Factors, R_i - Infant, Inhalation	135
Table 5.2.2	Pathway Dose Factors, R_i - Child, Inhalation	136
Table 5.2.3	Pathway Dose Factors, R_i - Teen, Inhalation	137
Table 5.2.4	Pathway Dose Factors, R_i - Adult, Inhalation	138
Table 5.3.1	Pathway Dose Factors, R_i - All Age Groups, Ground Plane	139
Table 5.4.1	Pathway Dose Factors, R_i - Infant, Grass-Cow-Milk	140
Table 5.4.2	Pathway Dose Factors, R_i - Child, Grass-Cow-Milk	141
Table 5.4.3	Pathway Dose Factors, R_i - Teen, Grass-Cow-Milk	142
Table 5.4.4	Pathway Dose Factors, R_i - Adult, Grass-Cow-Milk	143
Table 5.5.1	Pathway Dose Factors, R_i - Infant, Grass-Goat-Milk	144

HISTORY INFO

TABLE OF CONTENTS (Cont'd)

PART III EFFLUENT DATA AND CALCULATIONAL METHODOLOGIES

Section		Page
TABLES		
Table 5.5.2	Pathway Dose Factors, R_i - Child, Grass-Goat-Milk	145
Table 5.5.3	Pathway Dose Factors, R_i - Teen, Grass-Goat-Milk	146
Table 5.5.4	Pathway Dose Factors, R_i - Adult, Grass-Goat-Milk	147
Table 5.6.1	Pathway Dose Factors, R_i - Infant, Grass-Cow-Meat	148
Table 5.6.2	Pathway Dose Factors, R_i - Child, Grass-Cow-Meat	149
Table 5.6.3	Pathway Dose Factors, R_i - Teen, Grass-Cow-Meat	150
Table 5.6.4	Pathway Dose Factors, R_i - Adult, Grass-Cow-Meat	151
Table 5.7.1	Pathway Dose Factors, R_i - Infant, Vegetation	152
Table 5.7.2	Pathway Dose Factors, R_i - Child, Vegetation	153
Table 5.7.3	Pathway Dose Factors, R_i - Teen, Vegetation	154
Table 5.7.4	Pathway Dose Factors, R_i - Adult, Vegetation	155
Table 8.1	Sample Collection and Analysis Requirements	164
Table 8.2	Reporting Levels for Radioactivity Concentrations in Environmental Samples	168
Table 8.3	Detection Capabilities for Environmental Sample Analysis	169
Table 8.4	TMINS REMP Station Locations - Air Particulate and Air Iodine	171
Table 8.5	TMINS REMP Station Locations - Direct Radiation (TLD)	171
Table 8.6	TMINS REMP Station Locations - Surface Water	173
Table 8.7	TMINS REMP Station Locations - Aquatic Sediment	173
Table 8.8	TMINS REMP Station Locations - Milk	174
Table 8.9	TMINS REMP Station Locations - Fish	174
Table 8.10	TMINS REMP Station Locations - Food Products	175

HISTORY INFO

TABLE OF CONTENTS (Cont'd)

PART III EFFLUENT DATA AND CALCULATIONAL METHODOLOGIES

Section		Page
TABLES		
MAP 8.1	Three Mile Island Nuclear Station Locations of Radiological Environmental Monitoring Program Stations within 1 Mile of the Site	176
MAP 8.2	Three Mile Island Nuclear Station Locations of Radiological Environmental Monitoring Program Stations within 5 miles of the Site	177
MAP 8.3	Three Mile Island Nuclear Station Locations of Radiological Environmental Monitoring Program Stations Greater than 5 miles from the Site	178
FIGURES		
Figure 1.1	TMI-1 Liquid Effluent Pathways	95
Figure 1.2	TMI-2 Liquid Effluent Pathways	96
Figure 3.1	TMI-1 Liquid Radwaste	106
Figure 3.2	TMI-1 Liquid Waste Evaporators	107
Figure 4.1	TMI-1 Gaseous Effluent Pathways	122
Figure 4.2	TMI-1 Auxiliary & Fuel Handling Buildings Effluent Pathways	123
Figure 4.3	TMI-1 Reactor Building Effluent Pathway	124
Figure 4.4	TMI-1 Condenser Offgas Effluent Pathway	125
Figure 4.5	TMI-2 Gaseous Effluent Filtration System/Pathways	126
Figure 6.1	Waste Gas System	157

HISTORY INFO

TABLE OF CONTENTS (Cont'd)

PART IV REPORTING REQUIREMENTS

Section		Page
1.0	TMI ANNUAL RADIOLOGICAL ENVIRONMENTAL OPERATING REPORT	182
2.0	TMI ANNUAL RADIOACTIVE EFFLUENT RELEASE REPORT	183
3.0	PART IV REFERENCES	185

APPENDICES

A. Pathway Dose Rate Parameter (P_i)

B. Inhalation Pathway Dose Factor (R_i)

C. Ground Plane Pathway Dose Factor (R_i)

D. Grass-Cow-Milk Pathway Dose Factor (R_i)

E. Cow-Meat Pathway Dose Factor (R_i)

F. Vegetation Pathway Dose Factor (R_i)

APPENDIX A - F REFERENCES

HISTORY INFO

HISTORY INFO

PART I

TMI-1 RADIOLOGICAL EFFLUENT CONTROLS

1.0 DEFINITIONS

The following terms are defined for uniform interpretation of these controls and surveillances.

1.1 Reactor Operating Conditions

1.1.1 Cold Shutdown

The reactor is in the cold shutdown condition when it is subcritical by at least one percent delta k/k and Tavg is no more than 200°F. Pressure is defined by Technical Specification 3.1.2.

1.1.2 Hot Shutdown

The reactor is in the hot shutdown condition when it is subcritical by at least one percent delta k/k and Tavg is at or greater than 525°F.

1.1.3 Reactor Critical

The reactor is critical when the neutron chain reaction is self-sustaining and Keff = 1.0.

1.1.4 Hot Standby

The reactor is in the hot standby condition when all of the following conditions exist:

a. Tavg is greater than 525°F.

b. The reactor is critical.

c. Indicated neutron power on the power range channels is less than two percent of rated power. Rated power is defined in Technical Specification Definition 1.1.

1.1.5 Power Operation

The reactor is in a power operating condition when the indicated neutron power is above two percent of rated power as indicated on the power range channels. Rated power is defined in Technical Specification Definition 1.1.

1.1.6 Refueling Shutdown

The reactor is in the refueling shutdown condition when, even with all rods removed, the reactor would be subcritical by at least one percent delta k/k and the coolant temperature at the decay heat removal pump suction is no more than 140°F. Pressure is defined by Technical Specification 3.1.2. A refueling shutdown refers to a shutdown to replace or rearrange all or a portion of the fuel assemblies and/or control rods.

1.1.7 Refueling Operation

An operation involving a change in core geometry by manipulation of fuel or control rods when the reactor vessel head is removed.

HISTORY INFO

1.1.8 Refueling Interval

Time between normal refuelings of the reactor. This is defined as once per 24 months.

1.1.9 Startup

The reactor shall be considered in the startup mode when the shutdown margin is reduced with the intent of going critical.

1.1.10 Tave

Tave is defined as the arithmetic average of the coolant temperatures in the hot and cold legs of the loop with the greater number of reactor coolant pumps operating, if such a distinction of loops can be made.

1.1.11 Heatup - Cooldown Mode

The heatup-cooldown mode is the range of reactor coolant temperature greater than 200°F and less than 525°F.

1.2 Operable

A system, subsystem, train, component or device shall be OPERABLE or have OPERABILITY when it is capable of performing its specified function(s) and when all necessary attendant instrumentation, controls, electrical power, cooling or seal water, lubrication or other auxiliary equipment that are required for the system, subsystem, train, component, or device to perform its function(s) are also capable of performing their related support function(s).

1.3 Instrument Channel

An instrument channel is the combination of sensor, wires, amplifiers, and output devices which are connected for the purpose of measuring the value of a process variable for the purpose of observation, control, and/or protection. An instrument channel may be either analog or digital.

1.4 Instrumentation Surveillance

1.4.1 Channel Test

A CHANNEL TEST shall be the injection of a simulated signal into the channel as close to the sensor as practical to verify OPERABILITY, including alarm and/or trip functions.

1.4.2 Channel Check

A CHANNEL CHECK shall be the qualitative assessment of channel behavior during operation by observation. This determination shall include, where possible, comparison of the channel indication and/or status with other indications and/or status derived from independent instrumentation channels measuring the same parameter.

HISTORY INFO

1.4.3 Source Check

A SOURCE CHECK shall be the qualitative assessment of channel response when the channel sensor is exposed to a radioactive source.

1.4.4 Channel Calibration

An instrument CHANNEL CALIBRATION is a test, and adjustment (if necessary), to establish that the channel output responds with acceptable range and accuracy to known values of the parameter which the channel measures or an accurate simulation of these values. Calibration shall encompass the entire channel, including equipment actuation, alarm, or trip and shall be deemed to include the channel test.

1.5 Dose Equivalent I-131

The DOSE EQUIVALENT I-131 shall be that concentration of I-131 (microcurie/gram) which alone would produce the same thyroid dose as the quantity and isotopic mixture of I-131, I-132, I-133, I-134, and I-135 actually present. The thyroid dose conversion factors used for this calculation shall be those listed in Table III of TID 14844, "Calculation of Distance Factors for Power and Test Reactor Sites". [Or in Table E-7 of NRC Regulatory Guide 1.109, Revision 1, October 1977.]

1.6 Offsite Dose Calculation Manual (ODCM)

The OFFSITE DOSE CALCULATION MANUAL (ODCM) contains the methodology and parameters used in the calculation of offsite doses resulting from radioactive gaseous and liquid effluent, in the calculation of gaseous and liquid effluent monitoring Alarm/Trip Setpoints, and in the conduct of the Radiological Environmental Monitoring Program. The ODCM also contains (1) the Radiological Effluent Controls, (2) the Radiological Environmental Monitoring Program and (3) descriptions of the information that should be included in the Annual Radiological Environmental Operating and Annual Radioactive Effluent Release Reports.

1.7 Gaseous Radwaste Treatment

The GASEOUS RADWASTE TREATMENT SYSTEM is the system designed and installed to reduce radioactive gaseous effluent by collecting primary coolant system off gases from the primary system and providing for delay or holdup for the purpose of reducing the total radioactivity prior to release to the environment.

1.8 Ventilation Exhaust Treatment System

A VENTILATION EXHAUST TREATMENT SYSTEM is any system designed and installed to reduce gaseous radioiodine or radioactive material in particulate form in effluent by passing ventilation or vent exhaust gases through charcoal absorbers and/or HEPA filters for the purpose of removing iodine or particulates from the gaseous exhaust system prior to the release to the environment. Engineered Safety Feature (ESF) atmospheric cleanup systems are not considered to be VENTILATION EXHAUST TREATMENT SYSTEMS.

1.9 Purge - Purging

PURGE or PURGING is the controlled process of discharging air or gas from a confinement to maintain temperature, pressure, humidity, concentration or other operating conditions in such a manner that replacement air or gas is required to purify the confinement.

HISTORY INFO

1.10 Venting

VENTING is the controlled process of discharging air as gas from a confinement to maintain temperature, pressure, humidity, concentration or other operating conditions in such a manner that replacement air or gas is not provided. Vent used in system name does not imply a VENTING process.

1.11 Member(s) of the Public

MEMBER(S) OF THE PUBLIC shall include all persons who are not occupationally associated with the plant. This category does not include employees of the GPU System, GPU contractors or vendors. Also excluded from this category are persons who enter the site to service equipment or to make deliveries.

1.12 Site Boundary

The SITE BOUNDARY used as the basis for the limits on the release of gaseous effluents is as defined in Section 2.1.2.2 and shown on Figure 2.1-3 of the TMI-1 FSAR. This boundary line includes portions of the Susquehanna River surface between the east bank of the river and Three Mile Island and between Three Mile Island and Shelley Island.

The SITE BOUNDARY used as the basis for the limits on the release of liquid effluents is as shown in Figure 1.1 in Part I of this ODCM.

1.13 Frequency Notation

The FREQUENCY NOTATION specified for the performance of Surveillance Requirements shall correspond to the intervals defined in Table 1.1. All Surveillance Requirements shall be performed within the specified time interval with a maximum allowable extension not to exceed 25% of the surveillance interval. The 25% extension applies to all frequency intervals with the exception of "F." No extension is allowed for intervals designated "F."

HISTORY INFO

Table 1-1

Frequency Notation

Notation	Frequency
S	Shiftly (once per 12 hours)
D	Daily (once per 24 hours)
W	Weekly (once per 7 days)
M	Monthly (once per 31 days)
Q	Quarterly (once per 92 days)
S/A	Semi-Annually (once per 184 days)
R	Refueling Interval (once per 24 months)
P S/U	Prior to each reactor startup, if not done during the previous 7 days
P	Completed prior to each release
N/A (NA)	Not applicable
E	Once per 18 months
F	Not to exceed 24 months

Bases

Section 1.13 establishes the limit for which the specified time interval for Surveillance Requirements may be extended. It permits an allowable extension of the normal surveillance interval to facilitate surveillance scheduling and consideration of plant operating conditions that may not be suitable for conducting the surveillance; e.g., transient conditions or other ongoing surveillance or maintenance activities. It also provides flexibility to accommodate the length of a fuel cycle for surveillances that are specified to be performed at least once each REFUELING INTERVAL. It is not intended that this provision be used repeatedly as a convenience to extend surveillance intervals beyond that specified for surveillances that are not performed once each REFUELING INTERVAL. Likewise, it is not the intent that REFUELING INTERVAL surveillances be performed during power operation unless it is consistent with safe plant operation. The limitation of Section 1.13 is based on engineering judgement and the recognition that the most probable result of any particular surveillance being performed is the verification of conformance with the Surveillance Requirements. This provision is sufficient to ensure that the reliability ensured through surveillance activities is not significantly degraded beyond that obtained from the specified surveillance interval.

HISTORY INFO

FIGURE 1.1

Gaseous Effluent Release Points and Liquid Effluent Outfall Locations

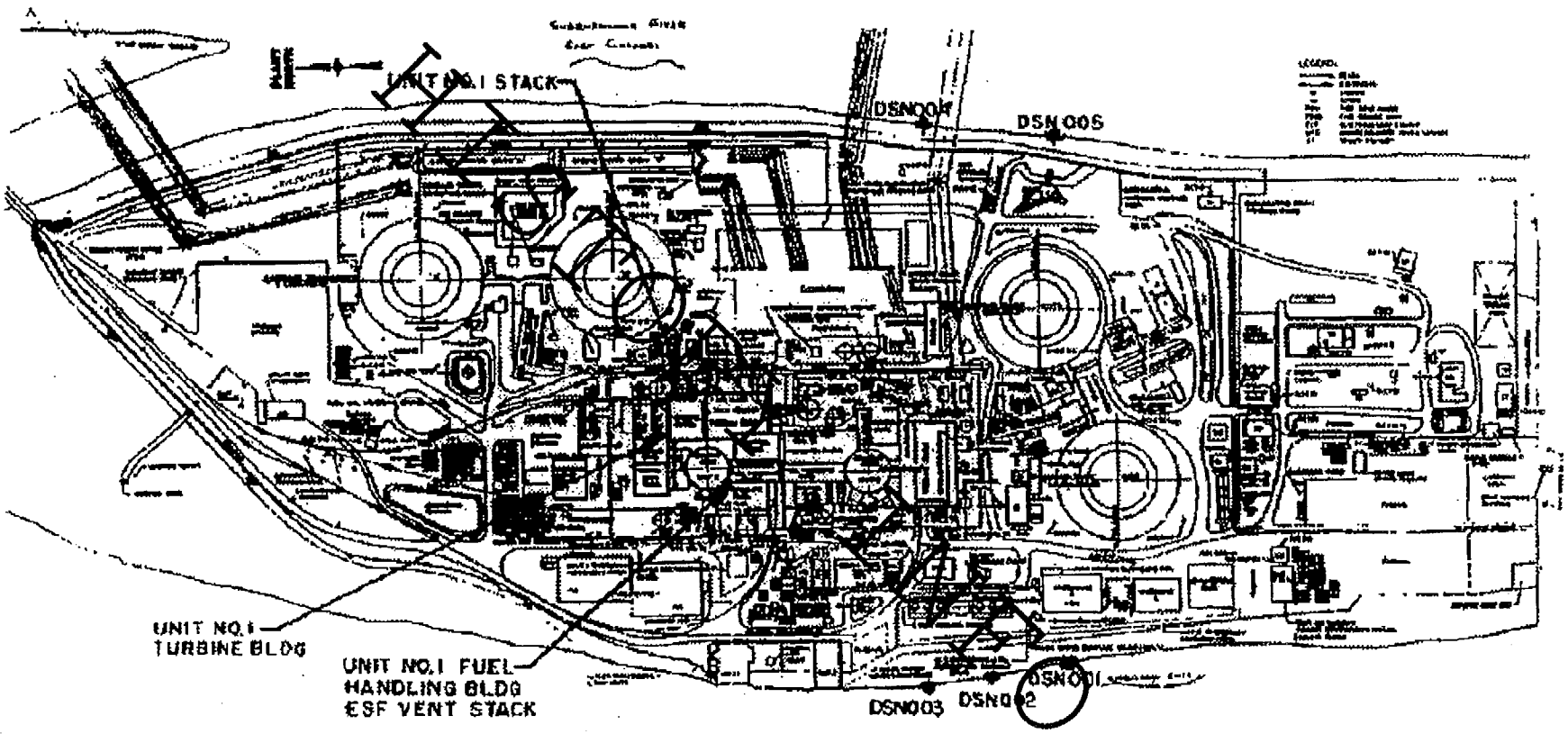

2.0 CONTROLS AND BASES

2.1 Radioactive Effluent Instrumentation

2.1.1 Radioactive Liquid Effluent Instrumentation

CONTROL:

The radioactive liquid effluent monitoring instrumentation channels shown in Table 2.1-1 shall be OPERABLE with their alarm/trip setpoints set to ensure that the limits of Control 2.2.1.1 are not exceeded. The alarm/trip setpoints of these channels shall be determined in accordance with the OFFSITE DOSE CALCULATION MANUAL (ODCM).

APPLICABILITY: At all times *

ACTION:

a. With a radioactive liquid effluent monitoring instrumentation channel alarm/trip setpoint less conservative than required by the above control, immediately suspend the release of radioactive liquid effluent monitored by the affected channel or declare the channel inoperable.

b. With less than the minimum number of radioactive liquid effluent monitoring instrumentation channels OPERABLE, take the ACTION shown in Table 2.1-1. Exert best efforts to return the instrumentation to OPERABLE status within 30 days and, if unsuccessful, explain in the next Annual Effluent Release Report why the inoperability was not corrected in a timely manner.

* For FT-34, and RM-L6, operability is not required when discharges are positively controlled through the closure of WDL-V257.

* For RM-L12 and associated IWTS/IWFS flow interlocks, operability is not required when discharges are positively controlled through the closure of IW-V72, 75 and IW-V280, 281.

For FT-146, operability is not required when discharges are positively controlled through the closure of WDL-V257, IW-V72, 75 and IW-V280, 281.

BASES

The radioactive liquid effluent instrumentation is provided to monitor and control, as applicable, the releases of radioactive materials in liquid effluent during actual or potential releases. The alarm/trip setpoints for these instruments shall be calculated in accordance with NRC approved methods in the ODCM to ensure that the alarm/trip will occur prior to exceeding ten times the effluent concentrations of 10 CFR Part 20.

HISTORY INFO

Table 2.1-1

Radioactive Liquid Effluent Instrumentation

	Instrument	Minimum Channels Operable	ACTION
1.	Gross Radioactivity Monitors Providing Automatic Termination of Release		
a.	Unit 1 Liquid Radwaste Effluent Line (RM-L6)	1	18
b.	IWTS/IWFS Discharge Line (RM-L12)	1	20
2.	Flow Rate Measurement Devices		
a.	Unit 1 Liquid Radwaste Effluent Line (FT-84)	1	21
b.	Station Effluent Discharge (FT-146)	1	21

Table Notation

ACTION 18 With the number of channels OPERABLE less than required by the Minimum Channels OPERABLE requirement, effluent releases may continue, provided that prior to initiating a release:

1. At least two independent samples are analyzed in accordance with Surveillances 3.2.1.1.1 and 3.2.1.1.2 and;
2. At least two technically qualified members of the Unit staff independently verify the release rate calculations and verify the discharge valve lineup.
3. Director Operations and Maintenance TMI shall approve each release.

Otherwise, suspend release of radioactive effluents via this pathway.

ACTION 20 With the number of channels OPERABLE less than required by the Minimum Channels OPERABLE requirement, effluent releases via this pathway may commence or continue provided that grab samples are collected and analyzed for gross radioactivity (beta or gamma) at a limit of detection of at least $1x10^{-7}$ microcuries/ml, prior to initiating a release and at least once per 12 hours during release.

ACTION 21 With the number of channels OPERABLE less than required by the Minimum Channels OPERABLE requirement, radioactive effluent releases via this pathway may continue, provided the flow rate is estimated at least once per 4 hours during actual releases. Pump curves may be used to estimate flow.

HISTORY INFO

2.1.2 Radioactive Gaseous Process and Effluent Monitoring Instrumentation

CONTROL:

The radioactive gaseous process and effluent monitoring instrumentation channels shown in Table 2.1-2 shall be OPERABLE with their alarm/trip setpoints set to ensure that the limits of Control 2.2.2.1 are not exceeded. The alarm/trip setpoints of these channels shall be determined in accordance with the OFFSITE DOSE CALCULATION MANUAL (ODCM).

APPLICABILITY: As shown in Table 2.1-2.

ACTION:

a. With a radioactive gaseous process or effluent monitoring instrumentation channel alarm/trip setpoint less conservative than required by the above control, immediately suspend the release of radioactive effluent monitored by the affected channel or declare the channel inoperable.

b. With less than the minimum number of radioactive gaseous process or effluent monitoring instrumentation channels OPERABLE, take the ACTION shown in Table 2.1-2. Exert best efforts to return the instrumentation to OPERABLE status within 30 days and, if unsuccessful, explain in the next Annual Effluent Release Report why the inoperability was not corrected in a timely manner.

BASES

The radioactive gaseous effluent instrumentation is provided to monitor and control, as applicable, the releases of radioactive materials in gaseous effluent during actual or potential releases. The alarm/trip setpoints for these instruments shall be calculated in accordance with NRC approved methods in the ODCM to provide reasonable assurance that the annual releases are within the limits specified in 10 CFR 20.1301.

The low range condenser offgas noble gas activity monitors also provide data for determination of steam generator primary to secondary leakage rate. Channel operability requirements are based on an ASLB Order No. LBP-84-47 dated October 31, 1984, and as cited in 20 NRC 1405 (1984).

HISTORY INFO

Table 2.1-2

Radioactive Gaseous Process and Effluent Monitoring Instrumentation

	INSTRUMENT	MINIMUM CHANNELS OPERABLE	APPLICABILITY	ACTION
1.	Waste Gas Holdup System			
a.	Noble Gas Activity Monitor (RM-A7)	1	***	25
b.	Effluent System Flow Rate Measuring Device (FT-123)	1	***	26
2.	Waste Gas Holdup System Explosive Gas Monitoring System			
a.	Hydrogen Monitor	2	**	30
b.	Oxygen Monitor	2	**	30
3.	Containment Purge Monitoring System			
a.	Noble Gas Activity Monitor (RM-A9)	1	#	27
b.	Iodine Sampler (RM-A9)	1	#	31
c.	Particulate Sampler (RM-A9)	1	#	31
d.	Effluent System Flow Rate Measuring Device (FR-148)	1	#	26
e.	Sampler Flow Rate Monitor	1	#	26

HISTORY INFO

Table 2.1-2 (Cont'd)

Radioactive Gaseous Process and Effluent Monitoring Instrumentation

INSTRUMENT	MINIMUM CHANNELS OPERABLE	APPLICABILITY	ACTION
4. Condenser Vent System			
a. Low Range Noble Gas Activity Monitor (RM-A5Lo and Suitable Equivalent)	2[1]	##	32

NOTE (1): For one of the channels, an operable channel may be defined for purposes of this control and 3.1.2.1 only as a suitable equivalent monitoring system capable of being placed in service within one hour. A suitable equivalent system shall include instrumentation with comparable sensitivity and response time to the RM-A5Lo monitoring channel. When the equivalent monitoring system is in service, indication will be continuously available to the operator, either through indication and alarm in the Control Room or through communication with a designated individual continuously observing local indication.

HISTORY INFO

Table 2.1-2 (Cont'd)

Radioactive Gaseous Process and Effluent Monitoring Instrumentation

	INSTRUMENT	MINIMUM CHANNELS OPERABLE	APPLICABILITY	ACTION
5.	Auxiliary and Fuel Handling Building Ventilation System			
a.	Noble Gas Activity Monitor (RM-A8) or (RM-A4 and RM-A6)	1	*	27
b.	Iodine Samples (RM-A8) or (RM-A4 and RM-A6)	1	*	31
c.	Particulate Sampler (RM-A8) or (RM-A4 and RM-A6)	1	*	31
d.	Effluent System Flow Rate Measuring Devices (FR-149 and FR-150)	1	*	26
e.	Sampler Flow Rate Monitor	1	*	26
6.	Fuel Handling Building ESF Air Treatment System			
a.	Noble Gas Activity Monitor (RM-A14 or Suitable Equivalent)	1	****	27, 33
b.	Iodine Cartridge	N/A(2)	****	31, 33
c.	Particulate Filter	N/A(2)	****	31, 33
d.	Effluent System Flow (UR-1104A/B)	1	****	26, 33
e.	Sampler Flow Rate Monitor	1	****	26, 33

NOTE 2: No instrumentation channel is provided. However, for determining operability, the equipment named must be installed and functional or the ACTION applies.

HISTORY INFO

Table 2.1-2 (Cont'd)

Radioactive Gaseous Process and Effluent Monitoring Instrumentation

	INSTRUMENT	MINIMUM CHANNELS OPERABLE	APPLICABILITY	ACTION
7.	Chemical Cleaning Building Ventilation System			
a.	Noble Gas Activity Monitor (ALC RM-I-18)	1[3]	###	27
b.	Iodine Sampler (ALC RM-I-18)	1[3]	###	31
c.	Particulate Sampler (ALC RM-I-18)	1	###	31
8.	Waste Handling and Packaging Facility Ventilation System			
a.	Particulate Sampler (WHP-RIT-1)	1	###	31
9.	Respirator and Laundry Maintenance Facility Ventilation System			
a.	Particulate Sampler (RLM-RM-1)	1	###	31

NOTE 3: Channel only required when liquid radwaste is moved or processed within the facility.

HISTORY INFO

Table 2.1-2

Table Notation

* At all times.
** During waste gas holdup system operation.
*** Operability is not required when discharges are positively controlled through the closure of WDG-V47 and where RM-A8 (or RM-A4 and RM-A6), FT-149, and FT-150 are operable.
**** During Fuel Handling Building ESF Air Treatment System Operation.
\# At all times during containment purging.
\#\# At all times when condenser vacuum is established.
\#\#\# During operation of the ventilation system.

ACTION 25 With the number of channels OPERABLE less than required by the Minimum Channels OPERABLE requirement, the contents of the tank may be released to the environment provided that prior to initiating the release:

1. At least two independent samples of the tank's contents are analyzed in accordance with Table 3.2-2, Item A, and

2. At least two technically qualified members of the Unit staff independently verify the release rate calculations and verify the discharge valve lineup.

3. The Director Operations & Maintenance TMI, shall approve each release.

Otherwise, suspend release of radioactive effluent via this pathway.

ACTION 26 With the number of channels OPERABLE less than required by the Minimum Channels OPERABLE requirement, effluent releases via this pathway may continue provided the flow rate is estimated at least once per 4 hours.

ACTION 27 With the number of channels OPERABLE less than required by the Minimum Channels OPERABLE requirement, effluent releases via this pathway may continue provided grab samples are taken at least once per 12 hours and the initial samples are analyzed for gross activity (gamma scan) within 24 hours after the channel has been declared inoperable. If RM-A9 is declared inoperable, see also Technical Specification 3.5.1, Table 3-5.1, Item C.3.f.

ACTION 30 1. With the number of channels OPERABLE less than required by the Minimum Channels OPERABLE requirement, a grab sample shall be collected and analyzed for the inoperable gas channel(s) at least once per 24 hours. With both channels inoperable, a grab sample shall be collected and analyzed for the inoperable gas channel(s):

(a) at least once per 4 hours during degassing operations.

(b) at least once per 24 hours during other operations (e.g. Feed and Bleed).

HISTORY INFO

Table 2.1-2

2. If the inoperable gas channel(s) is not restored to service within 14 days, a special report shall be submitted to the Regional Administrator of the NRC Region I Office and a copy to the Director, Office of Inspection and Enforcement within 30 days of declaring the channel(s) inoperable. The report shall describe (a) the cause of the monitor inoperability, (b) action being taken to restore the instrument to service, and (c) action to be taken to prevent recurrence.

ACTION 31 With the number of channels OPERABLE less than required by the Minimum Channels OPERABLE requirement, effluent releases via this pathway may continue provided that within four hours after the channel has been declared inoperable, samples are continuously collected with auxiliary sampling equipment.

ACTION 32 With the number of channels OPERABLE less than required by the Minimum Channels OPERABLE requirement, effluent releases via this pathway may continue for up to 28 days, provided that one OPERABLE channel remains in service or is placed in service within 1 hour. **After 28 days, or if one OPERABLE channel does not remain in service or is not placed in service within 1 hour, the provisions of Technical Specification 3.0.1 apply, as if this Control were a Tech Spec Limiting Condition for Operation.**

ACTION 33 With the number of channels OPERABLE less than required by the Minimum Channels OPERABLE requirement, either restore the inoperable channel to OPERABLE status within 7 days, or prepare and submit a special report within 30 days outlining the action(s) taken, the cause of the inoperability, and plans and schedule for restoring the system to OPERABLE status.

HISTORY INFO

2.2 Radioactive Effluent Controls

2.2.1 Liquid Effluent Controls

2.2.1.1 Liquid Effluent Concentration

CONTROL:

The concentration of radioactive material released at anytime from the unit to unrestricted areas shall be limited to ten times the concentrations specified in 10 CFR Part 20.1001-20.2401, Appendix B, Table 2, Column 2 for radionuclides other than dissolved or entrained noble gases. For dissolved or entrained noble gases, the concentration shall be limited to 3×10^{-3} uCi/cc total activity.

APPLICABILITY: At all times

ACTION:

With the concentration of radioactive material released from the unit to unrestricted areas exceeding the above limits, immediately restore concentrations within the above limits.

BASES

This control is provided to ensure that the concentration of radioactive materials released in liquid waste effluent from the unit to unrestricted areas will be less than ten times the concentration levels specified in 10 CFR Part 20.1001-20.2401, Appendix B, Table 2. This limitation provides additional assurance that the levels of radioactive materials in bodies of water outside the site will not result in exposures with (1) the Section II.A design objectives of Appendix I, 10 CFR Part 50, to a MEMBER OF THE PUBLIC and (2) the limits of 10 CFR Part 20.1301 to the population. The concentration limit for noble gases is based upon the assumption the Xe-135 is the controlling radioisotope and its MPC in air (submersion) was converted to an equivalent concentration in water using the methods described in International Commission on Radiological Protection (ICRP) Publication 2.

2.2.1.2 Liquid Effluent Dose

CONTROL

The dose or dose commitment to a MEMBER OF THE PUBLIC from radioactive materials in liquid effluents released from the unit to the SITE BOUNDARY shall be limited:

a. During any calendar quarter to less than or equal to 1.5 mrem to the total body and to less than or equal to 5 mrem to any organ.

b. During any calendar year to less than or equal to 3 mrem to the total body and to less than or equal to 10 mrem to any organ.

HISTORY INFO

APPLICABILITY: At all times

ACTION:

a. With the calculated dose from the release of radioactive materials in liquid effluents exceeding any of the above limits, prepare and submit to the NRC Region I Administrator within 30 days, a Special Report which identifies the cause(s) for exceeding the limit(s) and defines the corrective actions to be taken to reduce the releases of radioactive materials in liquid effluents during the remainder of the current calendar quarter and during the subsequent 3 calendar quarters so that the cumulative dose or dose commitment to any individual from such releases during these four calendar quarters is within 3 mrem to the total body and 10 mrem to any organ. This Special Report shall also include (1) the result of radiological analyses of the drinking water source, and (2) the radiological impact on finished drinking water supplies with regard to the requirements of 40 CFR 141, Safe Drinking Water Act.

BASES

This control and associated action is provided to implement the requirements of Sections II.A, III.A, and IV.A of Appendix I, 10 CFR Part 50. The Control implements the guides set forth in Section II.A of Appendix I. The ACTION statements provide the required operating flexibility and at the same time implement the guides set forth in Section IV.A of Appendix I to assure that the releases of radioactive material in liquid effluents will be kept "as low as is reasonably achievable". Also, for fresh water sites with drinking water supplies which can be potentially affected by plant operations, there is reasonable assurance that the operation of the facility will not result in radionuclide concentrations in the finished drinking water that are in excess of the requirements of 10 CFR 20. The dose calculations in the ODCM implement The requirements in Section III.A. of Appendix I that conformance with the guides of Appendix I is to be shown by calculational procedures based on models and data such that the actual exposure of a MEMBER OF THE PUBLIC through appropriate pathways is unlikely to be substantially underestimated. The equations specified in the ODCM for calculating the doses due to the actual release rates of radioactive materials in liquid effluents are consistent with the methodology provided in Regulatory Guide 1.109, "Calculation of Annual Doses to Man from Routine Releases of Reactor Effluents for the Purpose of Evaluating Compliance with 10 CFR Part 50, Appendix I," Revision 1, October, 1977, and Regulatory Guide 1.113, "Estimating Aquatic Dispersion of Effluents from Accidental and Routine Reactor Releases for the Purpose of Implementing Appendix I," April, 1977. NUREG-0133 provides methods for dose calculations consistent with Regulatory Guides 1.109 and 1.113.

HISTORY INFO

2.2.1.3 Liquid Radwaste Treatment System

CONTROL:

The appropriate portions of the liquid radwaste treatment system shall be used to reduce the radioactive materials in liquid wastes prior to their discharge when the projected doses due to the liquid effluent from the unit to unrestricted areas would exceed 0.06 mrem to the total body or 0.2 mrem to any organ in any calendar month.

APPLICABILITY: At all times

ACTION:

a. With radioactive liquid waste being discharged without treatment and in excess of the above limits, prepare and submit to the NRC Region I Administrator within 30 days, a Special Report which includes the following information:

1. Explanation of why liquid radwaste was being discharged without treatment, identification of any inoperable equipment or subsystems, and the reason for inoperability,

2. Action(s) taken to restore the inoperable equipment to OPERABLE status, and,

3. A summary description of action(s) taken to prevent a recurrence.

BASES

The requirement that the appropriate portions of this system be used, when specified, provides assurance that the releases of radioactive materials in liquid effluents will be kept as low as is reasonably achievable. This control implements the requirements of 10 CFR Part 50.36a, General Design Criterion 60 of Appendix A to 10 CFR Part 50 and the design objective given in Section II.D of Appendix I to 10 CFR Part 50. The intent of Section II.D. is to reduce effluents to as low as is reasonably achievable in a cost effective manner. This control satisfies this intent by establishing a dose limit which is a small fraction (25%) of Section II.A of Appendix I, 10 CFR Part 50 dose requirements. This margin, a factor of 4, constitutes a reasonable reduction.

HISTORY INFO

2.2.1.4 Liquid Holdup Tanks

CONTROL

The quantity of radioactive material contained in each of the following tanks shall be limited to less than or equal to 10 curies, excluding tritium and dissolved or entrained noble gases.

a. Outside temporary tank

APPLICABILITY: At all times.

ACTION:

a. With the quantity of radioactive material in any of the above listed tanks exceeding the above limit, immediately suspend all additions of radioactive material to the tank and within 48 hours reduce the tank contents to within the limit.

BASES

Restricting the quantity of radioactive material contained in the specified tanks provides assurance that in the event of an uncontrolled release of the tanks' contents, the resulting concentrations would be less than the limits of 10 CFR Part 20.1001-20-20.2401, Appendix B, Table 2, Column 2, at the nearest potable water supply and the nearest surface water supply in an unrestricted area.

2.2.2 Gaseous Effluent Controls

2.2.2.1 Gaseous Effluent Dose Rate

CONTROL:

The dose rate due to radioactive materials released in gaseous effluent from the site shall be limited to the following:

a. For noble gases: less than or equal to 500 mrem/yr to the total body and less than or equal to 3000 mrem/yr to the skin, and

b. For I-131, I-133, tritium and all radionuclides in particulate form with half lives greater than 8 days: less than or equal to 1500 mrem/yr to any organ.

APPLICABILITY: At all times.

ACTION:

With the release rate(s) exceeding the above limits, immediately decrease the release rate to comply with the above limit(s).

HISTORICAL INFO

BASES

The control provides reasonable assurance that the annual dose at the SITE BOUNDARY from gaseous effluent from all units on the site will be within the annual dose limits of 10 CFR Part 20 for unrestricted areas while providing sufficient operational flexibility in establishing effluent monitor setpoints. These gaseous release rates provide reasonable assurance that radioactive material discharged in gaseous effluent will not result in the exposure of a MEMBER OF THE PUBLIC in an unrestricted area, either within or outside the SITE BOUNDARY, to annual average concentrations exceeding the values specified in Appendix B, Table 2 of 10 CFR Part 20. For MEMBERS OF THE PUBLIC who may at times be within the SITE BOUNDARY, the occupancy of the MEMBER OF THE PUBLIC will be sufficiently low to compensate for any increase in the atmospheric diffusion factor above that for the exclusion area boundary. The specified release rate limits restrict, at all times, the corresponding gamma and beta dose rates above background to a MEMBER OF THE PUBLIC at or beyond the SITE BOUNDARY to less than or equal to 500 mrem/year to the total body or to less than or equal to 3000 mrem/year to the skin. These release rate limits also restrict, at all times, the corresponding thyroid dose rate above background to a child via the inhalation pathway to less than or equal to 1500 mrem/year (NUREG 0133).

2.2.2.2 Gaseous Effluents Dose-Noble Gases

CONTROL:

The air dose due to noble gases released in gaseous effluents from the unit to areas at and beyond the SITE BOUNDARY shall be limited to the following:

a. During any calendar quarter: less than or equal to 5 mrad for gamma radiation and less than or equal to 10 mrad for beta radiation and,

b. During any calendar year: less than or equal to 10 mrad for gamma radiation and less than or equal to 20 mrad for beta radiation.

APPLICABILITY: At all times.

ACTION:

a. With the calculated air dose from radioactive noble gases in gaseous effluents exceeding any of the above limits, prepare and submit to the NRC Region I Administrator within 30 days, a Special Report which identifies the cause(s) for exceeding the limit(s) and defines the corrective actions that have been taken to reduce the releases and the proposed corrective actions to be taken to assure that subsequent releases will be in compliance with the above limits.

HISTORY INFO

BASES

This control applies to the release of radioactive materials in gaseous effluents from TMI-1.

This control and associated action is provided to implement the requirements of Section II.B, III.A and IV.A of Appendix I, 10 CFR Part 50. The Control implements the guides set forth in Section II.B of Appendix I. The ACTION statements provide the required operating flexibility and at the same time implement the guides set forth in Section IV.A of Appendix I to assure that the releases of radioactive material in gaseous effluents will be kept "as low as is reasonably achievable." The Surveillance Requirements implement the requirements in Section III.A of Appendix I that conformance with the guides of Appendix I be shown by calculational procedures based on models and data such that the actual exposure of a MEMBER OF THE PUBLIC through the appropriate pathways is unlikely to be substantially underestimated. The dose calculation methodology and parameters established in the ODCM for calculating the doses due to the actual release rates of radioactive noble gases in gaseous effluents are consistent with the methodology provided in Regulatory Guide 1.109, "Calculation of Annual Doses to Man from Routine Release of Reactor Effluents for the Purpose of Evaluating Compliance with 10 CFR Part 50, Appendix I," Revision 1, October 1977 and Regulatory Guide 1.111, "Methods for Estimating Atmospheric Transport and Dispersion of Gaseous Effluents in Routine Releases from Light-Water Cooled Reactors," Revision 1, July 1977. The ODCM equations provided for determining the air doses at and beyond the SITE BOUNDARY are based upon the historical average atmospheric conditions. NUREG-0133 provides methods for dose calculations consistent with Regulatory Guides 1.109 and 1.111.

2.2.2.3 Dose - Iodine-131, Iodine-133, Tritium, and Radionuclides In Particulate Form

CONTROL:

The dose to a MEMBER OF THE PUBLIC from Iodine-131, Iodine-133, Tritium, and all radionuclides in particulate form with half lives greater than 8 days, in gaseous effluents released from the unit to areas at and beyond the SITE BOUNDARY shall be limited to the following:

a. During any calendar quarter: less than or equal to 7.5 mrem to any organ, and

b. During any calendar year: less than or equal to 15 mrem to any organ.

APPLICABILITY: At all times.

HISTORY ONLY

ACTION:

With the calculated dose from the release of Iodine-131, Iodine-133, Tritium, and radionuclides in particulate form with half lives greater than 8 days, in gaseous effluents exceeding any of the above limits, prepare and submit to the NRC Region I Administrator within 30 days, a Special Report which identifies the cause(s) for exceeding the limit and defines the corrective actions that have been taken to reduce the releases and the proposed corrective actions to be taken to assure that subsequent releases will be in compliance with the above limits.

BASES

This control applies to the release of radioactive materials in gaseous effluents from TMI-1.

This control and associated action is provided to implement the requirements of Section II.C, III.A and IV.A of Appendix I, 10 CFR Part 50. The Controls are the guides set forth in Section II.C of Appendix I. The ACTION statement provides the required operating flexibility and at the same time implements the guides set forth in Section IV.A of Appendix I to assure that the releases of radioactive materials in gaseous effluents will be kept "as low as is reasonably achievable." The ODCM calculational methods specified in the surveillance requirements implement the requirements in Section III.A of Appendix I that conformance with the guides of Appendix I be shown by calculational procedures based on models and data such that the actual exposure of a MEMBER OF THE PUBLIC through appropriate pathways is unlikely to be substantially underestimated. The ODCM calculational methodology and parameters for calculating the doses due to the actual release rates of the subject materials are consistent with the methodology provided in Regulatory Guide 1.109, "Calculation of Annual Doses to Man from Routine Releases of Reactor Effluents for the Purpose of Evaluating Compliance with 10 CFR Part 50, Appendix I," Revision 1, October, 1977 and Regulatory Guide 1.111, "Methods for Estimating Atmospheric Transport and Dispersion of Gaseous Effluents in Routine Releases from Light-Water-Cooled Reactors," Revision 1, July, 1977. These equations also provide for determining the actual doses based upon the historical average atmospheric conditions. The release rate controls for iodine-131, iodine-133, tritium and radionuclides in particulate form with half lives greater than 8 days are dependent upon the existing radionuclide pathways to man, in areas at and beyond the SITE BOUNDARY. The pathways that were examined in the development of these calculations were: 1) individual inhalation of airborne radionuclides, 2) deposition of radionuclides onto green leafy vegetation with subsequent consumption by man, 3) deposition onto grassy areas where milk animals and meat producing animals graze with consumption of the milk and meat by man, and 4) deposition on the ground with subsequent exposure of man.

HISTORY INFO

2.2.2.4 Gaseous Radwaste Treatment System

CONTROL

The GASEOUS RADWASTE TREATMENT SYSTEM and the VENTILATION EXHAUST TREATMENT SYSTEM shall be OPERABLE. The appropriate portions of the GASEOUS RADWASTE TREATMENT SYSTEM shall be used to reduce radioactive materials in the gaseous waste prior to their discharge when the monthly projected gaseous effluent air doses due to untreated gaseous effluent releases from the unit would exceed 0.2 mrad for gamma radiation and 0.4 mrad for beta radiation. The appropriate portions of the VENTILATION EXHAUST TREATMENT SYSTEM shall be used to reduce radioactive materials in gaseous waste prior to their discharge when the monthly projected doses due to gaseous effluent releases from the site would exceed 0.3 mrem to any organ.

APPLICABILITY: At all times.

ACTION:

a. With the GASEOUS RADWASTE TREATMENT SYSTEM and/or the VENTILATION EXHAUST TREATMENT SYSTEM inoperable for more than a month or with gaseous waste being discharged without treatment and in excess of the above limits, prepare and submit to the NRC Region I Administrator within 30 days, a Special Report which includes the following information:

   1. Identification of the inoperable equipment or subsystems and the reason for inoperability,

   2. Action(s) taken to restore the inoperable equipment to OPERABLE status, and

   3. A summary description of action(s) taken to prevent a recurrence.

BASES

The use of the GASEOUS RADWASTE TREATMENT SYSTEM and the VENTILATION EXHAUST TREATMENT SYSTEM ensures that gaseous effluents are treated as appropriate prior to release to the environment. The appropriate portions of this system provide reasonable assurance that the releases of radioactive materials in gaseous effluents will be kept "as low as is reasonably achievable." This control implements the requirements of 10 CFR Part 50.36a, General Design Criterion 60 of Appendix A to 10 CFR Part 50, and the design objectives given in Section II.D of Appendix I to 10 CFR Part 50. The specified limits governing the use of appropriate portions of the systems were specified as a suitable fraction of the guide set forth in Sections II.B and II.C of Appendix I, 10 CFR Part 50, for gaseous effluents.

HISTORY INFO

2.2.2.5 Explosive Gas Mixture

CONTROL

The concentration of oxygen in the Waste Gas Holdup System shall be limited to less than or equal to 2% by volume whenever the concentration of hydrogen in the Waste Gas Holdup System is greater than or equal to 4% by volume.

AVAILABILITY: At all times.

ACTION:

Whenever the concentration of hydrogen in the Waste Gas Holdup System is greater than or equal to 4% by volume, and:

a. The concentration of oxygen in the Waste Gas Holdup System is greater than 2% by volume, but less than 4% by volume, without delay begin to reduce the oxygen concentration to within its limit.

b. The concentration of oxygen in the Waste Gas Holdup System is greater than or equal to 4% by volume, immediately suspend additions of waste gas to the Waste Gas Holdup System and without delay begin to reduce the oxygen concentration to within its limit.

BASES:

Based on experimental data (Reference 1), lower limits of flammability for hydrogen is 5% and for oxygen is 5% by volume. Therefore, if the concentration of either gas is kept below it lower limit, the other gas may be present in higher amounts without the danger of an explosive mixture. Maintaining the concentrations of hydrogen and oxygen such that an explosive mixture does not occur in the waste gas holdup system provides assurance that the release of radioactive materials will be controlled in conformance with the requirements of General Design Criterion 60 of Appendix A to 10 CFR 50.

REFERENCES

(1) Bulletin 503, Bureau of Mines; Limits of Flammability of Gases and Vapors.

HISTORY INFO

2.2.2.6 Waste Gas Decay Tanks

CONTROL:

The quantity of radioactivity contained in each waste gas decay tank shall be limited to less than or equal to 8800 curies noble gases (considered as Xe-133).

APPLICABILITY: At all times.

ACTION:

a. With the quantity of radioactive material in any waste gas decay tank exceeding the above limit, immediately suspend all additions of radioactive material to the tank and within 48 hours reduce the tank contents to within the limit.

BASES

Restricting the quantity of radioactivity contained in each waste gas decay tank provides assurance that in the event of an uncontrolled release of the tanks contents, the resulting total body exposure to a MEMBER OF THE PUBLIC at the nearest exclusion area boundary will not exceed 0.5 rem. This is consistent with Standard Review Plan 15.7.1, "Waste Gas System Failure."

2.2.3 Total Radioactive Effluent Controls

2.2.3.1 Total Dose

CONTROL:

The annual (calendar year) dose or dose commitment to any MEMBER OF THE PUBLIC, due to releases of radioactivity and to radiation from uranium fuel cycle sources shall be limited to less than or equal to 25 mrem to the total body or any organ except the thyroid, which shall be limited to less than or equal to 75 mrem.

APPLICABILITY: At all times.

ACTION:

With the calculated dose from the release of radioactive materials in liquid or gaseous effluents exceeding twice the limits of Controls 2.2.1.2.a, 2.2.1.2.b, 2.2.2.2.a, 2.2.2.2.b, 2.2.2.3.a, or, 2.2.2.3.b, calculations should be made including direct radiation contributions from the unit and from outside storage tanks to determine whether the above limits of Control 2.2.3.1 have been exceeded. If such is the case, prepare and submit to the NRC Region I Administrator within 30 days, a Special Report which defines the corrective action to be taken to reduce subsequent releases to prevent recurrence of exceeding the above limits and includes the schedule for achieving conformance with the above limits. This Special Report, as defined in

HISTORY LINE

10 CFR Part 20.2203(b), shall include an analysis which estimates the radiation exposure (dose) to a MEMBER OF THE PUBLIC from uranium fuel cycle sources, including all effluent pathways and direct radiation, for the calendar year that includes the release(s) covered by this report. It shall also describe levels of radiation and concentrations of radioactive material involved, and the cause of the exposure levels or concentrations. If the estimated dose(s) exceed the above limits, and if the release condition resulting in violation of 40 CFR 190 has not already been corrected, the Special Report shall include a request for a variance in accordance with the provisions of 40 CFR 190. Submittal of the report is considered a timely request, and a variance is granted until staff action on the request is complete.

BASES

This control is provided to meet the dose limitations of 40 CFR Part 190 that have been incorporated into 10 CFR Part 20.1301(b). This control requires the preparation and submittal of a Special Report whenever the calculated doses from plant generated radioactive effluents and direct radiation exceed 25 mrem to the total body or any organ, except the thyroid, which shall be limited to less than or equal to 75 mrem. For sites containing up to 4 reactors, it is highly unlikely that the resultant dose to a MEMBER OF THE PUBLIC will exceed the dose limits of 40 CFR Part 190 if the individual reactors remain within twice the dose design objectives of Appendix I, and if direct radiation doses from the reactor units and outside storage tanks are kept small. The Special Report will describe a course of action that should result in the limitation of the annual dose to a MEMBER OF THE PUBLIC to within the 40 CFR Part 190 limits. For the purposes of the Special Report, it may be assumed that the dose commitment to the member of the public from other uranium fuel cycle sources is negligible, with the exception that dose contributions from other nuclear fuel cycle facilities at the same site or within a radius of 8 km must be considered. If the dose to any member of the public is estimated to exceed the requirements of 40 CFR Part 190, the Special Report with a request for a variance (provided the release conditions resulting in violation of 40 CFR Part 190 have not already been corrected), in accordance with the provisions of 40 CFR Part 190.11 and 10 CFR Part 20.2203(b), is considered to be a timely request and fulfills the requirements of 40 CFR Part 190 until NRC staff action is completed. The variance only relates to the limits of 40 CFR Part 190, and does not apply in any way to the other requirements for dose limitation of 10 CFR Part 20, as addressed in Controls 2.2.1.1 and 2.2.2.1. An individual is not considered a MEMBER OF THE PUBLIC during any period in which he/she is engaged in carrying out any operation that is part of the nuclear fuel cycle.

HISTORY LOG

3.0 SURVEILLANCES

3.1 Radioactive Effluent Instrumentation

3.1.1 Radioactive Liquid Effluent Instrumentation

Surveillance Requirements

3.1.1.1 Each radioactive liquid effluent monitoring instrumentation channel shall be demonstrated OPERABLE by performance of the CHANNEL CHECK, SOURCE CHECK, CHANNEL CALIBRATION, AND CHANNEL TEST operations during the MODES and at the frequencies shown in Table 3.1-1.

HISTORY INFO

Table 3.1-1

Radioactive Liquid Effluent Monitoring Instrumentation Surveillance Requirements

	INSTRUMENT	CHANNEL CHECK	SOURCE CHECK	CHANNEL CALIBRATION	CHANNEL TEST
1.	Radioactivity Monitors Providing Alarm and Automatic Isolation				
a.	Unit 1 Liquid Radwaste Effluents Line (RM-L-6)	D	P	R(2)	Q(1)
b.	IWTS/IWFS Discharge Line (RM-L-12)	D	P	R(2)	Q(1)
2.	Flow Rate Monitors				
a.	Unit 1 Liquid Radwaste Effluent Line (FT-84)	D(3)	N/A	R	Q
b.	Station Effluent Discharge (FT-146)	D(3)	N/A	R	Q

HISTORY INFO

Table 3.1-1

Table Notation

(1) The CHANNEL TEST shall also demonstrate that automatic isolation of this pathway and control room alarm annunciation occurs if the following condition exists:

1. Instrument indicates measured levels above the high alarm/trip setpoint. (Includes - circuit failure)

2. Instrument indicates a down scale failure. (Alarm function only.) (Includes - circuit failure)

3. Instrument controls moved from the operate mode (Alarm function only).

(2) The initial CHANNEL CALIBRATION for radioactivity measurement instrumentation shall be performed using one or more of the reference standards certified by the National Bureau of Standards or using standards that have been obtained from suppliers that participated in measurement assurance activities with NBS. These standards should permit calibrating the system over its intended range of energy and measurement range. For subsequent CHANNEL CALIBRATION, sources that have been related to the initial calibration should be used. (Operating plants may substitute previously established calibration procedures for this requirement)

(3) CHANNEL CHECK shall consist of verifying indication of flow during periods of release. CHANNEL CHECK shall be made at least once daily on any day on which continuous, periodic, or batch releases are made.

HISTORY INFO

3.1.2 Radioactive Gaseous Process and Effluent Monitoring Instrumentation

SURVEILLANCE REQUIREMENTS

3.1.2.1 Each radioactive gaseous process or effluent monitoring instrumentation channel shall be demonstrated OPERABLE by performance of the CHANNEL CHECK, SOURCE CHECK, CHANNEL CALIBRATION, and CHANNEL TEST operations at the frequencies shown in Table 3.1-2.

HISTORY INFO

Table 3.1-2

Radioactive Gaseous Process and Effluent Monitoring Instrumentation Surveillance Requirements

	INSTRUMENT	CHANNEL CHECK	SOURCE CHECK	CHANNEL CALIBRATION	CHANNEL TEST	APPLICABILITY
1.	Waste Gas Holdup System					
a.	Noble Gas Activity Monitor (RM-A7)	P	P	E(3)	Q(1)	***
b.	Effluent System Flow Rate Measuring Device (FT-123)	P	N/A	E	Q	***
2.	Waste Gas Holdup System Explosive Gas Monitoring System					
a.	Hydrogen Monitor	D	N/A	Q(4)	M	**
b.	Oxygen Monitor	D	N/A	Q(5)	M	**
3.	Containment Purge Vent System					
a.	Noble Gas Activity Monitor (RM-A9)	D	P	E(3)	M(1)	#
b.	Iodine Sampler (RM-A9)	W	N/A	N/A	N/A	#
c.	Particulate Sampler (RM-A9)	W	N/A	N/A	N/A	#
d.	Effluent System Flow Rate Measuring Device (FR-148)	D	N/A	E	Q	#
e.	Sampler Flow Rate Monitor	D	N/A	E	N/A	#
4.	Condenser Vent System					
a.	Noble Gas Activity Monitor (RM-A5 and Suitable Equivalent - See Table 2.1-2, Item 4.a)	D	M	E(3)	Q(2)	##

HISTORY INFO

Table 3.1-2

Radioactive Gaseous Process and Effluent Monitoring Instrumentation Surveillance Requirements

	INSTRUMENT	CHANNEL CHECK	SOURCE CHECK	CHANNEL CALIBRATION	CHANNEL TEST	APPLICABILITY
5.	Auxiliary and Fuel Handling Building Ventilation System					
a.	Noble Gas Activity Monitor (RM-A8) or (RM-A4 and RM-A6)	D	M	E(3)	Q(1)	*
b.	Iodine Sampler (RM-A8) or (RM-A4 and RM-A6)	W	N/A	N/A	N/A	*
c.	Particulate Sampler (RM-A8) or (RM-A4 and RM-A6)	W	N/A	N/A	N/A	*
d.	System Effluent Flow Rate Measurement Devices (FR-149 and FR-150)	D	N/A	E	Q	*
e.	Sampler Flow Rate Monitor	D	N/A	E	N/A	*
6.	Fuel Handling Building ESF Air Treatment System					
a.	Noble Gas Activity Monitor (RM-A14)	D	M	R(3)	Q(2)	****
b.	System Effluent Flow Rate (UR-1104 A/B)	D	N/A	R	Q	****
c.	Sampler Flow Rate Measurement Device	D	N/A	R	Q	****

HISTORY INFO

Table 3.1-2

Radioactive Gaseous Process and Effluent Monitoring Instrumentation Surveillance Requirements

	INSTRUMENT	CHANNEL CHECK	SOURCE CHECK	CHANNEL CALIBRATION	CHANNEL TEST	APPLICABILITY
7.	Chemical Cleaning Building Ventilation System					
a.	Noble Gas Activity Monitor (ALC RM-I-18)	D	M	E(3)	Q(2)	###
b.	Iodine Sampler (ALC RM-I-18)	W	N/A	N/A	N/A	###
c.	Particulate Sampler (ALC RM-I-18)	W	N/A	N/A	N/A	###
8.	Waste Handling and Packaging Facility Ventilation System					
a.	Particulate Sampler (WHP-RIT-1)	D	W	SA	W	###
9.	Respirator and Laundry Maintenance Ventilation System					
a.	Particulate Sampler (RLM-RM-1)	D	W	SA	W	###

HISTORY INFO

Table 3.1-2

Table Notation

* At all times.
** During waste gas holdup system operation.
*** Operability is not required when discharges are positively controlled through the closure of WDG-V47, and where RM-A8 (or RM-A4 and RM-A6), FT-149, and FT-150 are operable.
**** During Fuel Handling Building ESF Air Treatment System Operation.
\# At all times during containment purging.
\#\# At all times when condenser vacuum is established.
\#\#\# During operation of the ventilation system.

(1) The CHANNEL TEST shall also demonstrate that automatic isolation of this pathway for the Auxiliary and Fuel Handling Building Ventilation System, the supply ventilation is isolated and control room alarm annunciation occurs if the following condition exists:

1. Instrument indicates measured levels above the high alarm/trip setpoint (Includes circuit failure).

2. Instrument indicates a down scale failure (Alarm function only) (Includes circuit failure).

3. Instrument controls moved from the operate mode (Alarm function only).

(2) The CHANNEL TEST shall also demonstrate that control room alarm annunciation occurs if any of the following conditions exist:

1 Instrument indicates measured levels above the alarm setpoint. (includes circuit failure)

2. Instrument indicates a down scale failure (includes circuit failure).

3. Instrument controls moved from the operate mode.

(3) The initial CHANNEL CALIBRATION for radioactivity measurement instrumentation shall be performed using one or more of the reference standards certified by the National Bureau of Standards or using standards that have been obtained from suppliers that participate in measurement assurance activities with NBS. These standards should permit calibrating the system over its intended range of energy and measurement range. For subsequent CHANNEL CALIBRATION, sources that have been related to the initial calibration should be used. (Operating plants may substitute previously established calibration procedures for this requirement.)

(4) The CHANNEL CALIBRATION shall include the use of standard gas samples containing a nominal:

1. One volume percent hydrogen, balance nitrogen, and

2. Four volume percent hydrogen, balance nitrogen.

(5) The CHANNEL CALIBRATION shall include the use of standard gas samples containing a nominal:

1. One volume percent oxygen, balance nitrogen, and

2. Four volume percent oxygen, balance nitrogen.

HISTORY INFO

3.2 Radioactive Effluents

3.2.1 Liquid Effluents

SURVEILLANCE REQUIREMENTS

3.2.1.1 Concentration

3.2.1.1.1 The radioactivity content of each batch of radioactive liquid waste shall be determined prior to release by sampling and analysis in accordance with Table 3.2-1. The results of pre-release analyses shall be used with the calculational methods in the ODCM to assure that the concentration at the point of release is maintained within the limits of Control 2.2.1.1.

3.2.1.1.2 Post-release analysis of samples composited from batch releases shall be performed in accordance with Table 3.2-1. The results of the previous post-release analysis shall be used with the calculational methods in the ODCM to assure that the concentrations at the point of release were maintained within the limits of Control 2.2.1.1.

3.2.1.1.3 The radioactivity concentration of liquids discharged from continuous release points shall be determined by collection and analysis of samples in accordance with Table 3.2-1. The results of the analysis shall be used with the calculational methods of the ODCM to assure that the concentration at the point of release is maintained within the limits of Control 2.2.1.1.

3.2.1.2 Dose Calculations

3.2.1.2.1 Cumulative dose contributions from liquid effluents shall be determined in accordance with the Offsite Dose Calculation Manual (ODCM) at least once a month.

3.2.1.3 Liquid Waste Treatment

3.2.1.3.1 Doses due to liquid releases shall be projected at least once a month, in accordance with the ODCM.

3.2.1.4 Liquid Holdup Tanks

3.2.1.4.1 The quantity of radioactive material contained in each of the tanks specified in Control 2.2.1.4 shall be determined to be within the limit by analyzing a representative sample of the tank's content weekly when radioactive materials are being added to the tank.

HISTORY INFO

Table 3.2-1

Radioactive Liquid Waste Sampling and Analysis Program

	Liquid Release Type	Sampling Frequency	Minimum Analysis Frequency	Type of Activity Analysis	Lower Limit of Detection (LLD) (μCi/ml) (Note a)
A.1	Batch Waste Release Tanks (Note d)	P Each Batch	P Each Batch	H-3	1×10^{-5}
				Principal Gamma Emitters (Note f)	5×10^{-7}
				I-131	1×10^{-6}
				Dissolved and Entrained Gases (Gamma Emitters)	1×10^{-4}
		P Each Batch	Q Composite (Note b)	Gross alpha	1×10^{-7}
				Sr-89, Sr-90	5×10^{-8}
				Fe-55	1×10^{-6}
A.2	Continuous Releases (Note e)	Continuous (Note c)	W Composite (Note c)	Principal Gamma Emitters (Note f)	5×10^{-7}
				I-131	1×10^{-6}
				Dissolved and Entrained Gases (Gamma Emitters)	1×10^{-5}
		Continuous (Note c)	M Composite (Note c)	H-3	1×10^{-5}
				Gross alpha	1×10^{-7}
		Continuous (Note c)	Q Composite (Note c)	Sr-89, Sr-90	5×10^{-8}
				Fe-55	1×10^{-6}

HISTORY INFO

Table 3.2-1

Table Notation

a. The LLD is defined, for purposes of this surveillance, as the smallest concentration of radioactive material in a sample that will yield a net count above system background that will be detected with 95% probability with 5% probability of falsely concluding that a blank observation represents a "real" signal.

For a particular measurement system (which may include radiochemical separation):

$$LLD = \frac{4.66\, S_b}{E \times V \times 2.22 \times 10^6 \times Y \times \exp(-\lambda \Delta t)}$$

Where:

LLD is the "a priori" lower limit of detection as defined above (as microcurie per unit mass or volume),

s_b is the standard deviation of the background counting rate or of the counting rate of a blank sample as appropriate (as counts per minute),

E is the counting efficiency (as counts per disintegration),

V is the sample size (in units of mass or volume),

2.22×10^6 is the number of disintegrations per minute per microcurie,

Y is the fractional radiochemical yield (when applicable),

λ is the radioactive decay constant for the particular radionuclide, and

Δt is the elapsed time between midpoint of sample collection and time of counting.

Typical values of E, V, Y and Δt shall be used in the calculation.

It should be recognized that the LLD is defined as an "a priori" (before the fact) limit representing the capability of a measurement system and not as an "a posteriori" (after the fact) limit for a particular measurement.

b. A composite sample is one in which the quantity of liquid sampled is proportional to the quantity of liquid waste discharged and in which the method of sampling employed results in a specimen which is representative of the liquids released.

c. To be representative of the quantities and concentrations of radioactive materials in liquid effluent, samples shall be collected continuously in proportion to the rate of flow of the effluent stream. Prior to analyses, all samples taken for the composite shall be thoroughly mixed in order for the composite sample to be representative of the effluent release.

HISTORY INFO

Table 3.2-1

d. A batch release is the discharge of liquid wastes of a discrete volume. Prior to sampling for analyses, each batch shall be isolated, and be thoroughly mixed, by a method described in the ODCM, to assure representative sampling.

e. A continuous release is the discharge of liquid wastes of a non- discrete volume; e.g., from a volume or system that has an input flow during the continuous release.

f. The principal gamma emitters for which the LLD specification applies exclusively are the following radionuclides: Mn-54, Fe-59, Co-58, Co-60, Zn-65, Mo-99, Cs-134, Cs-137, Ce-141, and Ce-144. This list does not mean that only these nuclides are to be considered. Other gamma peaks that are identifiable, together with those of the above nuclides, shall also be analyzed and reported in the Annual Radioactive Effluent Release Report pursuant to TS 6.9.4.

HISTORY INFO

3.2.2 Gaseous Effluents

SURVEILLANCE REQUIREMENTS

3.2.2.1 Dose Rates

3.2.2.1.1 The dose rate due to noble gases in gaseous effluents shall be determined to be within the limits of Control 2.2.2.1.a in accordance with the methods and procedures of the ODCM.

3.2.2.1.2 The dose rate of radioactive materials, other than noble gases, in gaseous effluents shall be determined to be within the limits of Control 2.2.2.1.b in accordance with methods and procedures of the ODCM by obtaining representative samples and performing analyses in accordance with the sampling and analysis program, specified in Table 3.2-2.

3.2.2.2 Dose, Noble Gas

3.2.2.2.1 Cumulative dose contributions from noble gas effluents for the current calendar quarter and current calendar year shall be determined in accordance with the OFFSITE DOSE CALCULATION MANUAL (ODCM) monthly.

3.2.2.3 Dose, Iodine-131, Iodine-133, Tritium, and Radionuclides In Particulate Form

3.2.2.3.1 Cumulative dose contributions from Iodine-131, Iodine-133, Tritium, and radionuclides in particulate form with half lives greater than 8 days for the current calendar quarter and current calendar year shall be determined in accordance with the OFFSITE DOSE CALCULATION MANUAL (ODCM) monthly.

3.2.2.4 Gaseous Waste Treatment

3.2.2.4.1 Doses due to gaseous releases from the unit shall be projected monthly in accordance with the ODCM.

3.2.2.5 Explosive Gas Mixture

3.2.2.5.1 The concentrations of hydrogen and oxygen in the waste gas holdup system shall be determined to be within the limits of Control 2.2.2.5 by monitoring the waste gases in the Waste Gas Holdup System with the hydrogen and oxygen monitors covered in Table 2.1-2 of Control 2.1.2.

HISTORY LINE

3.2.2.6 Waste Gas Decay Tank

3.2.2.6.1 The concentration of radioactivity contained in the vent header shall be determined weekly. If the concentration of the vent header exceeds 10.7 Ci/cc, daily samples shall be taken of each waste gas decay tank being added to, to determine if the tank(s) is less than or equal to 8800 Ci/tank.

HISTORY INFO

Table 3.2-2

Radioactive Gaseous Waste Sampling and Analysis Program

	Gaseous Release Type	Sampling Frequency	Minimum Analysis Frequency	Type of Activity Analysis	Lower Limit of Detection (LLD) µCi/ml) (Note a)
A.	Waste Gas Decay Tank	P Each Tank Grab Sample	P Each Tank	Principal Gamma Emitters (Note g)	1×10^{-4}
B.	Containment Purge	P (Note b) Each Purge Grab Sample	P (Note b) Each Purge	H-3 Principal Gamma Emitters (Note g)	1×10^{-6} 1×10^{-4}
C.	Auxiliary and Fuel Handling Building Air Treatment System	M (Notes c, e) Grab Sample	M	H-3 Principal Gamma Emitters (Note g)	1×10^{-6} 1×10^{-4}
D.	Fuel Handling Building ESF Air Treatment System	M (during System Operation) Grab Sample	M (during System Operation)	H-3 Principal Gamma Emitters (Note g)	1×10^{-6} 1×10^{-4}
E.	Condenser Vacuum Pumps Exhaust (Note h)	M (Note h) Grab Sample	M (Note h)	H-3 Principal Gamma Emitters (Note g)	1×10^{-6} 1×10^{-4}
F.	Chemical Cleaning Building Air Treatment System	M (Note l) Grab Sample	M	H-3 Principal Gamma Emitters (Note g)	1×10^{-6} 1×10^{-4}
G.	Waste Handling and Packaging Facility Air Treatment System	See Section I of this table	See Section I of this table	See Section I of this table	See Section I of this table
H.	Respirator and Laundry Maintenance Facility Air Treatment System	See Section I of this table	See Section I of this table	See Section I of this table	See Section I of this table

HISTORY INFO

Table 3.2-2

Radioactive Gaseous Waste Sampling and Analysis Program

Gaseous Release Type	Sampling Frequency	Minimum Analysis Frequency	Type of Activity Analysis	Lower Limit of Detection (LLD) (µCi/ml) (Note a)
I. All Release Types as Listed Above in A, B, C and D (During System Operation	Continuous (Note f)	W (Note d) Charcoal Sample	I-131	1×10^{-12}
	Continuous (Note f)	W (Note d) Particulate	Principal Gamma Emitters (Note g) (I-131, Others)	1×10^{-11}
	Continuous (Note f)	Q Composite Particulate Sample	Gross Alpha	1×10^{-11}
	Continuous (Note f)	Q Composite Particulate Sample	Sr-89, Sr-90	1×10^{-11}
J. Condenser Vent Stack Continuous Iodine Sampler (Note j)	Continuous (Note k)	W (Note d) Charcoal Sample	I-131	1×10^{-12}

HISTORY INFO

Table 3.2-2

Table Notation

a. The LLD is defined, for purposes of this surveillance, as the smallest concentration of radioactive material in a sample that will yield a net count above system background that will be detected with 95% probability with 5% probability of falsely concluding that a blank observation represents a "real" signal.

For a particular measurement system (which may include radiochemical separation):

$$LLD = \frac{4.66 S_b}{E \times V \times 2.22 \times 10^6 \times Y \times \exp(-\lambda \Delta t)}$$

Where:

LLD is the "a priori" lower limit of detection as defined above (as microcurie per unit mass or volume),

S_b is the standard deviation of the background counting rate or of the counting rate of a blank sample as appropriate (as counts per minute),

E is the counting efficiency (as counts per disintegration),

V is the sample size (in units of mass or volume),

2.22×10^6 is the number of disintegrations per minute per microcurie,

Y is the fractional radiochemical yield (when applicable),

λ is the radioactive decay constant for the particular radionuclide, and

Δt is the elapsed time between midpoint of sample collection and time of counting.

Typical values of E, V, Y and Δt shall be used in the calculation.

It should be recognized that the LLD is defined as an "a priori" (before the fact) limit representing the capability of a measurement system and not as an "a posteriori" (after the fact) limit for a particular measurement.

b. Sampling and analysis shall also be performed following shutdown, startup, or a THERMAL POWER change exceeding 15 percent of RATED THERMAL POWER within one hour unless (1) analysis shows that the DOSE EQUIVALENT I-131 concentration in the primary coolant has not increased more than a factor of 3; and (2) the noble gas activity monitor shows that effluent activity has not increased by more than a factor of 3.

c. Tritium grab samples from the spent fuel pool area shall be taken at least once per 24 hours when the refueling canal is flooded.

HISTORY INFO

Table 3.2-2

d. Charcoal cartridges and particulate filters shall be changed at least once per 7 days and analyses shall be completed within 48 hours after changing (or after removal from sampler).

e. Tritium grab samples shall be taken weekly from the spent fuel pool area whenever spent fuel is in the spent fuel pool.

f. The ratio of the sample flow rate to the sampled stream flow rate shall be known for the time period covered by each dose or dose rate calculation made in accordance with Controls 2.2.2.1, 2.2.2.2, and 2.2.2.3.

g. The principal gamma emitters for which the LLD specification applies exclusively are the following radionuclides: Kr-87, Kr-88, Xe-133, Xe-133m, Xe-135 and Xe-138 for gaseous emissions and Mn-54, Fe-59, Co-58, Co-60, Zn-65, Mo-99, Cs-137, Ce-141 and Ce-144 for particulate emissions. This list does not mean that only these nuclides are to be considered. Other gamma peaks that are identifiable, together with those of the above nuclides, shall also be analyzed and reported in the Annual Radioactive Effluent Release Report pursuant to TS 6.9.1.

h. Applicable only when condenser vacuum is established. Sampling and analysis shall also be performed following shutdown, startup, or a THERMAL POWER change exceeding 15 percent of RATED THERMAL POWER within one hour unless (1) analysis shows that the DOSE EQUIVALENT I-131 concentration in the primary coolant has not increased more than a factor of 3; and (2) the noble gas activity monitor shows that effluent activity has not increased by more than a factor of 3.

i. Gross Alpha, Sr-89, and Sr-90 analyses do not apply to the Fuel Handling Building ESF Air Treatment System.

j. If the Condenser Vent Stack Continuous Iodine Sampler is unavailable, then alternate sampling equipment will be placed in service within 48 hours or a report will be prepared and submitted within 30 days from the time the sampler is found or made inoperable which identifies (a) the cause of the inoperability, (b) the action taken to restore representative sampling capability, (c) the action taken to prevent recurrence, and (d) quantification of the release via the pathway during the period and comparison to the limits prescribed by Control 2.2.2.1.b.

k. Applicable only when condenser vacuum is established.

l. Applicable when liquid radwaste is moved or processed within the facility.

m. Iodine samples only required in the Chemical Cleaning Building when TMI-1 liquid radwaste is stored or processed in the facility.

HISTORY INFO

3.2.3 Total Radioactive Effluents

3.2.3.1 Dose Calculation

3.2.3.1.1 Cumulative annual dose contributions from liquid and gaseous effluents shall be determined in accordance with Surveillances 3.2.1.2.1, 3.2.2.2.1, and 3.2.2.3.1, including direct radiation contributions from the Unit and from outside storage tanks, and in accordance with the methodology contained in the ODCM.

HISTORY INFO

4.0 PART I REFERENCES

4.1 Title 10, Code of Federal Regulations, "Energy"

4.2 Regulatory Guide 1.109, "Calculation of Annual Doses to Man from Routing Releases of Reactor Effluents for the Purpose of Evaluating Compliance with 10 CFR Part 50, Appendix I, "Revision 1, October 1977

4.3 TMI-1 Technical Specifications, attached to Facility Operating License No. DPR-50

4.4 TMI-1 FSAR

HISTORY INFO

HISTORY INFO

PART II

TMI-2 RADIOLOGICAL EFFLUENT CONTROLS

PART II

Definitions

1.0 **DEFINITIONS**

DEFINED TERMS

1.1 The DEFINED TERMS of this section appear in capitalized type and are applicable throughout Part II of the ODCM.

PDMS

1.2 Post-Defueling Monitored Storage (PDMS) is that condition where TMI-2 defueling has been completed, the core debris removed from the reactor during the clean-up period has been shipped off-site and the facility has been placed in a stable, safe and secure condition.

ACTION

1.3 ACTION shall be those additional requirements specified as corollary statements to each control and shall be part of the controls.

OPERABLE - OPERABILITY

1.4 A system, subsystem, train, component or device shall be OPERABLE or have OPERABILITY when it is capable of performing its specified function(s). Implicit in this definition shall be the assumption that all necessary attendant instrumentation, controls, normal and emergency electrical power sources, cooling or seal water, lubrication or other auxiliary equipment, that are required for the system, subsystem, train, component or device to perform its function(s), are also capable of performing their related support function(s).

CHANNEL CALIBRATION

1.5 A CHANNEL CALIBRATION shall be the adjustment, as necessary, of the channel output such that it responds with necessary range and accuracy to known values of the parameter which the channel monitors. The CHANNEL CALIBRATION shall encompass the entire channel including the sensor and alarm and/or trip functions, and shall include the CHANNEL FUNCTIONAL TEST. CHANNEL CALIBRATION may be performed by any series of sequential, overlapping or total channel steps such that the entire channel is calibrated.

CHANNEL CHECK

1.6 A CHANNEL CHECK shall be the qualitative assessment of channel behavior during operation by observation. This determination shall include, where possible, comparison of the channel indication and/or status with other indications and/or status derived from independent instrument channels measuring the same parameter.

HISTORY INFO

CHANNEL FUNCTIONAL TEST

1.7 A CHANNEL FUNCTIONAL TEST shall be:

a. Analog channels - the injection of a simulated signal into the channel as close to the primary sensor as practicable to verify OPERABILITY including alarm and/or trip functions.

b. Bistable channels - the injection of a simulated signal into the channel sensor to verify OPERABILITY including alarm and/or trip functions.

SOURCE CHECK

1.8 A SOURCE CHECK shall be the qualitative assessment of channel response when the channel sensor is exposed to a radioactive source.

COMPOSITE SAMPLE

1.9 A COMPOSITE SAMPLE is a combination of individual samples obtained at regular intervals over a time period. Either the volume of each individual sample is proportional to the flow rate discharge at the time of sampling or the number of equal volume samples is proportional to the time period used to produce the composite.

GRAB SAMPLE

1.10 A GRAB SAMPLE is an individual sample collected in less than fifteen minutes.

BATCH RELEASE

1.11 A BATCH RELEASE is the discharge of fluid waste of a discrete volume.

CONTINUOUS RELEASE

1.12 A CONTINUOUS RELEASE is the discharge of fluid waste of a non-discrete volume, e.g., from a volume or system that has an input flow during the CONTINUOUS RELEASE.

SITE BOUNDARY

1.13 The SITE BOUNDARY used as the basis for the limits on the release of gaseous effluents is as defined in Section 2.1.2.2 and shown on Figure 2.1-3 of the TMI-1 FSAR. This boundary line includes portions of the Susquehanna River surface between the east bank of the river and Three Mile Island and between Three Mile Island and Shelley Island.

The SITE BOUNDARY used as the basis for the limits on the release of liquid effluents is as shown in Figure 1.1 in Part I of this ODCM.

FREQUENCY NOTATION

1.14 The FREQUENCY NOTATION specified for the performance of Surveillance Requirements shall correspond to the intervals defined in Table 1.1. All Surveillance Requirements shall be performed within the specified time interval with a maximum allowable extension not to exceed 25% of the surveillance interval.

HISTORY INFO

TABLE 1.1

Frequency Notation

NOTATION	FREQUENCY
S (Shiftly)	At least once per 12 hours.
D (Daily)	At least once per 24 hours.
W (Weekly)	At least once per 7 days.
M (Monthly)	At least once per 31 days.
Q (Quarterly)	At least once per 92 days.
SA (Semi-Annually)	At least once per 184 days.
A (Annually)	At least once per 12 months.
E	At least once per 18 months.
N.A.	Not applicable.
P	Completed prior to each release

HISTORY INFO

2.0 CONTROLS AND BASES

2.0.1 Controls and ACTION requirements shall be applicable during the conditions specified for each control.

2.0.2 Adherence to the requirements of the Control and/or associated ACTION within the specified time interval shall constitute compliance with the control. In the event the Control is restored prior to expiration to the specified time interval, completion of the ACTION statement is not required.

2.0.3 In the event the Control and associated ACTION requirements cannot be satisfied because of circumstances in excess of those addressed in the Control, initiate appropriate actions to rectify the problem to the extent possible under the circumstances, and submit a special report to the Commission pursuant to TMI-2 PDMS Technical Specification (Tech. Spec.) Section 6.8.2 within 30 days unless otherwise specified.

2.1 Radioactive Effluent Instrumentation

2.1.1 Radioactive Liquid Effluent Instrumentation

Radioactive Liquid Effluent Instrumentation is common between TMI-1 and TMI-2. Controls, applicability, and actions are specified in ODCM Part I, Control 2.1.1

2.1.2 Radioactive Gaseous Process and Effluent Monitoring Instrumentation

CONTROL:

The radioactive gaseous process and effluent monitoring instrumentation channels shown in Table 2.1-2 shall be OPERABLE with their alarm/trip setpoints set to ensure that the limits of Control 2.2.2.1 are not exceeded. The alarm/trip setpoints of these channels shall be determined in accordance with the OFFSITE DOSE CALCULATION MANUAL (ODCM).

APPLICABILITY: As shown in Table 2.1-2.

ACTION:

a. With a radioactive gaseous process or effluent monitoring instrumentation channel alarm/trip setpoint less conservative than required by the above control, immediately suspend the release of radioactive effluent monitored by the affected channel or declare the channel inoperable.

b. With less than the minimum number of radioactive gaseous process or effluent monitoring instrumentation channels OPERABLE, take the ACTION shown in Table 2.1-2. Exert best efforts to return the instrumentation to OPERABLE status within 30 days and, if unsuccessful, explain in the next Annual Effluent Release Report why the inoperability was not corrected in a timely manner.

HISTORY INFO

BASES

The radioactive gaseous effluent instrumentation is provided to monitor and control, as applicable, the releases of radioactive materials in gaseous effluent during actual or potential releases. The alarm/trip setpoints for these instruments shall be calculated in accordance with NRC approved methods in the ODCM to provide reasonable assurance that the annual releases are within the limits specified in 10 CFR 20.1301.

HISTORY INFO

Table 2.1-2

Radioactive Gaseous Process and Effluent Monitoring Instrumentation

	INSTRUMENT	MINIMUM CHANNELS OPERABLE	APPLICABILITY	ACTION
1.	Containment Purge Monitoring System			
a.	Noble Gas Activity Monitor (2HP-R-225)	1	NOTE 1	NOTE 2
b.	Particulate Monitor (2HP-R-225)	1	NOTE 1	NOTE 2
c.	Effluent System Flow Rate Measuring Device (2AH-FR-5907 Pen 1)	1	NOTE 1	NOTE 3
2.	Station Ventilation System			
a.	Noble Gas Activity Monitor (2HP-R-219) or (2HP-R-219A)	1	NOTE 1	NOTE 2
b.	Particulate Monitor (2HP-R-219) or (2HP-R-219A)	1	NOTE 1	NOTE 2
c.	Effluent System Flow Rate Measuring Device (2AH-FR-5907 Pen 6)	1	NOTE 1	NOTE 3

NOTES:

1. During operation of the monitored system.
2. With the number of channels OPERABLE less than required by the Minimum Channels OPERABLE requirement, secure Reactor Building Purge if in progress.
3. With flow rate monitoring instrumentation out of service, flow rates from the Auxiliary, Fuel Handling, and Reactor Buildings may be estimated using the maximum design flow for the exhaust fans in operation.

HISTORY INFO

2.2 Radioactive Effluent Controls

2.2.1 Liquid Effluent Controls

2.2.1.1 Liquid Effluent Concentration

CONTROL:

The concentration of radioactive material released at anytime from the unit to unrestricted areas shall be limited to ten times the concentrations specified in 10 CFR Part 20.1001-20.2401, Appendix B, Table 2, Column 2.

APPLICABILITY: At all times

ACTION:

With the concentration of radioactive material released from the unit to unrestricted areas exceeding the above limits, immediately restore concentrations within the above limits.

BASES

This control is provided to ensure that the concentration of radioactive materials released in liquid waste effluent from the unit to unrestricted areas will be less than ten times the concentration levels specified in 10 CFR Part 20.1001-20.2401, Appendix B, Table 2. These Controls permit flexibility under unusual conditions, which may temporarily result in higher than normal releases, but still within ten times the concentrations, specified in 10 CFR 20. It is expected that by using this flexibility under unusual conditions, and exerting every effort to keep levels of radioactive material in liquid wastes as low as practicable, the annual releases will not exceed a small fraction of the annual average concentrations specified in 10 CFR 20. As a result, this Control provides reasonable assurance that the resulting annual exposure to an individual in off-site areas will not exceed the design objectives of Section II.A of Appendix I to 10 CFR Part 50, which were established as requirements for the cleanup of TMI-2 in the NRC's Statement of Policy of April 27, 1981.

2.2.1.2 Liquid Effluent Dose

CONTROL

The dose or dose commitment to a MEMBER OF THE PUBLIC from radioactive materials in liquid effluents released from the unit to the SITE BOUNDARY shall be limited:

a. During any calendar quarter to less than or equal to 1.5 mrem to the total body and to less than or equal to 5 mrem to any organ.

b. During any calendar year to less than or equal to 3 mrem to the total body and to less than or equal to 10 mrem to any organ.

HISTORY INFO

APPLICABILITY: At all times

ACTION:

a. With the calculated dose from the release of radioactive materials in liquid effluents exceeding any of the above limits, prepare and submit to the NRC Region I Administrator within 30 days, a Special Report which identifies the cause(s) for exceeding the limit(s) and defines the corrective actions to be taken to reduce the releases of radioactive materials in liquid effluents during the remainder of the current calendar quarter and during the subsequent 3 calendar quarters so that the cumulative dose or dose commitment to any individual from such releases during these four calendar quarters is within 3 mrem to the total body and 10 mrem to any organ. This Special Report shall also include (1) the result of radiological analyses of the drinking water source, and (2) the radiological impact on finished drinking water supplies with regard to the requirements of 40 CFR 141, Safe Drinking Water Act.

BASES

This Control requires that the dose to offsite personnel be limited to the design objectives of Appendix I of 10 CFR Part 50. This will assure the dose received by the public during RDMS is equivalent to or less than that from a normal operating reactor. The limits also assure that the environmental impacts are consistent with those assessed in NUREG-0683, the TMI-2 Programmatic Environmental Impact Statement (PEIS). The ACTION statements provide the required flexibility under unusual conditions and at the same time implement the guides set forth in Section IV.A of Appendix I to assure that the releases of radioactive material in liquid effluents will be kept "as low as is reasonably achievable". The dose calculations in the ODCM implement the requirements in Section III.A. of Appendix I that conformance with the guides of Appendix I is to be shown by calculational procedures based on models and data such that the actual exposure of a MEMBER OF THE PUBLIC through appropriate pathways is unlikely to be substantially underestimated. The equations specified in the ODCM for calculating the doses due to the actual release rates of radioactive materials in liquid effluents are consistent with the methodology provided in Regulatory Guide 1.109, "Calculation of Annual Doses to Man from Routine Releases of Reactor Effluents for the Purpose of Evaluating Compliance with 10 CFR Part 50, Appendix I," Revision 1, October, 1977, and Regulatory Guide 1.113, "Estimating Aquatic Dispersion of Effluents from Accidental and Routine Reactor Releases for the Purpose of Implementing Appendix I," April, 1977. NUREG-0133 provides methods for dose calculations consistent with Regulatory Guides 1.109 and 1.113.

HISTORY INFO

2.2.1.3 Liquid Radwaste Treatment System

CONTROL:

The appropriate portions of the liquid radwaste treatment system shall be used to reduce the radioactive materials in liquid wastes prior to their discharge when the projected doses due to the liquid effluent from the unit to unrestricted areas would exceed 0.06 mrem to the total body or 0.2 mrem to any organ in any calendar month.

APPLICABILITY: At all times

ACTION:

a. With radioactive liquid waste being discharged without treatment and in excess of the above limits, prepare and submit to the NRC Region I Administrator within 30 days, a Special Report which includes the following information:

1. Explanation of why liquid radwaste was being discharged without treatment, identification of any inoperable equipment or subsystems, and the reason for inoperability,

2. Action(s) taken to restore the inoperable equipment to OPERABLE status, and,

3. A summary description of action(s) taken to prevent a recurrence.

BASES

The requirement that the appropriate portions of this system (shared with TMI-1) be used, when specified, provides assurance that the releases of radioactive materials in liquid effluents will be kept as low as is reasonably achievable. This control implements the requirements of 10 CFR Part 50.36a, General Design Criterion 60 of Appendix A to 10 CFR Part 50 and the design objective given in Section II.D of Appendix I to 10 CFR Part 50. The intent of Section II.D. is to reduce effluents to as low as is reasonably achievable in a cost effective manner. This control satisfies this intent by establishing a dose limit which is a small fraction (25%) of Section II.A of Appendix I, 10 CFR Part 50 dose requirements. This margin, a factor of 4, constitutes a reasonable reduction.

HISTORY INFO

2.2.2 Gaseous Effluent Controls

2.2.2.1 Gaseous Effluent Dose Rate

CONTROL:

The dose rate due to radioactive materials released in gaseous effluent from the site shall be limited to the following:

a. For noble gases: less than or equal to 500 mrem/yr to the total body and less than or equal to 3000 mrem/yr to the skin, and

b. For tritium and all radionuclides in particulate form with half lives greater than 8 days: less than or equal to 1500 mrem/yr to any organ.

APPLICABILITY: At all times.

ACTION:

With the release rate(s) exceeding the above limits, immediately decrease the release rate to comply with the above limit(s).

BASES

The control provides reasonable assurance that the annual dose at the SITE BOUNDARY from gaseous effluent from all units on the site will be within the annual dose limits of 10 CFR Part 20 for unrestricted areas. At the same time, these Controls permit flexibility under unusual conditions, which may temporarily result in higher than the design objective levels, but still within the dose limits specified in 10 CFR 20 and within the design objectives of Appendix I to 10 CFR 50. It is expected that using this flexibility under unusual conditions, and by exerting every effort to keep levels of radioactive material in gaseous wastes as low as practicable, the annual releases will not exceed a small fraction of the annual dose limits specified in 10 CFR 20 and will not result in doses which exceed the design objectives of Appendix I to 10 CFR 50, which were endorsed as limits for the cleanup of TMI-2 by the NRC's Statement of Policy of April 27, 1981. These gaseous release rates provide reasonable assurance that radioactive material discharged in gaseous effluent will not result in the exposure of a MEMBER OF THE PUBLIC in an unrestricted area, either within or outside the SITE BOUNDARY, to annual average concentrations exceeding the values specified in Appendix B, Table 2 of 10 CFR Part 20. For MEMBERS OF THE PUBLIC who may at times be within the SITE BOUNDARY, the occupancy of the MEMBER OF THE PUBLIC will be sufficiently low to compensate for any increase in the atmospheric diffusion factor above that for the exclusion area boundary.

HISTORY INFO

The specified release rate limits restrict, at all times, the corresponding gamma and beta dose rates above background to a MEMBER OF THE PUBLIC at or beyond the SITE BOUNDARY to less than or equal to 500 mrem/year to the total body or to less than or equal to 3000 mrem/year to the skin. The absence of iodine ensures that the corresponding thyroid dose rate above background to an infant via the inhalation pathway is less than or equal to 1500 mrem/yr (NUREG 0133), thus there is no need to specify dose rate limits for these nuclides.

2.2.2.2 Gaseous Effluents Dose-Noble Gases

CONTROL:

The air dose due to noble gases released in gaseous effluents from the unit to areas at and beyond the SITE BOUNDARY shall be limited to the following:

a. During any calendar quarter: less than or equal to 5 mrad for gamma radiation and less than or equal to 10 mrad for beta radiation and,

b. During any calendar year: less than or equal to 10 mrad for gamma radiation and less than or equal to 20 mrad for beta radiation.

APPLICABILITY: At all times.

ACTION:

a. With the calculated air dose from radioactive noble gases in gaseous effluents exceeding any of the above limits, prepare and submit to the NRC Region I Administrator within 30 days, a Special Report which identifies the cause(s) for exceeding the limit(s) and defines the corrective actions that have been taken to reduce the releases and the proposed corrective actions to be taken to assure that subsequent releases will be in compliance with the above limits.

BASES

This control applies to the release of radioactive materials in gaseous effluents from TMI-2.

This control and associated action is provided to implement the requirements of Section II.B, III.A and IV.A of Appendix I, 10 CFR Part 50. The Control implements the guides set forth in Section II.B of Appendix I. The ACTION statements provide flexibility under unusual conditions and at the same time implement the guides set forth in Section IV.A of Appendix I to assure that the releases of radioactive material in gaseous effluents will be kept "as low as is reasonably achievable." The Surveillance Requirements implement the requirements in Section III.A of Appendix I that conformance with the guides of Appendix I be shown by calculational procedures based on models and data such that the actual exposure of a MEMBER OF THE PUBLIC through

HISTORY INFO

the appropriate pathways is unlikely to be substantially underestimated. The dose calculation methodology and parameters established in the ODCM for calculating the doses due to the actual release rates of radioactive noble gases in gaseous effluents are consistent with the methodology provided in Regulatory Guide 1.109, "Calculation of Annual Doses to Man from Routine Release of Reactor Effluents for the Purpose of Evaluating Compliance with 10 CFR Part 50, Appendix I," Revision 1, October 1977 and Regulatory Guide 1.111, "Methods for Estimating Atmospheric Transport and Dispersion of Gaseous Effluents in Routine Releases from Light-Water Cooled Reactors," Revision 1, July 1977. The ODCM equations provided for determining the air doses at and beyond the SITE BOUNDARY are based upon the historical average atmospheric conditions. NUREG-0133 provides methods for dose calculations consistent with Regulatory Guides 1.109 and 1.111.

2.2.2.3 Dose - Iodine-131, Iodine-133, Tritium, and Radionuclides In Particulate Form

CONTROL:

The dose to a MEMBER OF THE PUBLIC from Tritium and all radionuclides in particulate form with half lives greater than 8 days, in gaseous effluents released from the unit to areas at and beyond the SITE BOUNDARY shall be limited to the following:

a. During any calendar quarter: less than or equal to 7.5 mrem to any organ, and

b. During any calendar year: less than or equal to 15 mrem to any organ.

APPLICABILITY: At all times.

ACTION:

With the calculated dose from the release of Tritium and radionuclides in particulate form with half lives greater than 8 days, in gaseous effluents exceeding any of the above limits, prepare and submit to the NRC Region I Administrator within 30 days, a Special Report which identifies the cause(s) for exceeding the limit and defines the corrective actions that have been taken to reduce the releases and the proposed corrective actions to be taken to assure that subsequent releases will be in compliance with the above limits.

HISTORY INFO

BASES

This control applies to the release of radioactive materials in gaseous effluents from TMI-2.

This control and associated action is provided to implement the requirements of Section II.C, III.A and IV.A of Appendix I, 10 CFR Part 50. The Controls are the guides set forth in Section II.C of Appendix I. The ACTION statement provides flexability during unusual conditions and at the same time implements the guides set forth in Section IV.A of Appendix I to assure that the releases of radioactive materials in gaseous effluents will be kept "as low as is reasonably achievable." The ODCM calculational methods specified in the surveillance requirements implement the requirements in Section III.A of Appendix I that conformance with the guides of Appendix I be shown by calculational procedures based on models and data such that the actual exposure of a MEMBER OF THE PUBLIC through appropriate pathways is unlikely to be substantially underestimated. The ODCM calculational methodology and parameters for calculating the doses due to the actual release rates of the subject materials are consistent with the methodology provided in Regulatory Guide 1.109, "Calculation of Annual Doses to Man from Routine Releases of Reactor Effluents for the Purpose of Evaluating Compliance with 10 CFR Part 50, Appendix I," Revision 1, October, 1977 and Regulatory Guide 1.111, "Methods for Estimating Atmospheric Transport and Dispersion of Gaseous Effluents in Routine Releases from Light-Water-Cooled Reactors," Revision 1, July, 1977. These equations also provide for determining the actual doses based upon the historical average atmospheric conditions. The release rate controls for iodine-131, iodine-133, tritium and radionuclides in particulate form with half lives greater than 8 days are dependent upon the existing radionuclide pathways to man, in areas at and beyond the SITE BOUNDARY. The pathways that were examined in the development of these calculations were: 1) individual inhalation of airborne radionuclides, 2) deposition of radionuclides onto green leafy vegetation with subsequent consumption by man, 3) deposition onto grassy areas where milk animals and meat producing animals graze with consumption of the milk and meat by man, and 4) deposition on the ground with subsequent exposure of man. The absence of iodines at the site eliminates the need to specify dose limits for these nuclides.

HISTORY INFO

2.2.2.4 Ventilation Exhaust Treatment System

CONTROL

The VENTILATION EXHAUST TREATMENT SYSTEM shall be OPERABLE. The appropriate portions of the VENTILATION EXHAUST TREATMENT SYSTEM shall be used to reduce radioactive materials in gaseous waste prior to their discharge when the monthly projected doses due to gaseous effluent releases from the site would exceed 0.3 mrem to any organ.

APPLICABILITY: At all times.

ACTION:

a. With the VENTILATION EXHAUST TREATMENT SYSTEM inoperable for more than a month or with gaseous waste being discharged without treatment and in excess of the above limits, prepare and submit to the NRC Region I Administrator within 30 days, a Special Report which includes the following information:

   1. Identification of the inoperable equipment or subsystems and the reason for inoperability,

   2. Action(s) taken to restore the inoperable equipment to OPERABLE status, and

   3. A summary description of action(s) taken to prevent a recurrence.

BASES

The use of the VENTILATION EXHAUST TREATMENT SYSTEM ensures that gaseous effluents are treated as appropriate prior to release to the environment. The appropriate portions of this system provide reasonable assurance that the releases of radioactive materials in gaseous effluents will be kept "as low as is reasonably achievable." This control implements the requirements of 10 CFR Part 50.36a, General Design Criterion 60 of Appendix A to 10 CFR Part 50, and the design objectives given in Section II.D of Appendix I to 10 CFR Part 50. The specified limits governing the use of appropriate portions of the systems were specified as a suitable fraction of the guide set forth in Sections II.B and II.C of Appendix I, 10 CFR Part 50, for gaseous effluents.

HISTORICAL INFO

2.2.3 Total Radioactive Effluent Controls

2.2.3.1 Total Dose

CONTROL:

The annual (calendar year) dose or dose commitment to any MEMBER OF THE PUBLIC, due to releases of radioactivity and to radiation from uranium fuel cycle sources shall be limited to less than or equal to 25 mrem to the total body or any organ except the thyroid, which shall be limited to less than or equal to 75 mrem.

APPLICABILITY: At all times.

ACTION:

With the calculated dose from the release of radioactive materials in liquid or gaseous effluents exceeding twice the limits of Controls 2.2.1.2.a, 2.2.1.2.b, 2.2.2.2.a, 2.2.2.2.b, 2.2.2.3.a, or, 2.2.2.3.b, calculations should be made including direct radiation contributions from the unit and from outside storage tanks to determine whether the above limits of Control 2.2.3.1 have been exceeded. If such is the case, prepare and submit to the NRC Region I Administrator within 30 days, a Special Report which defines the corrective action to be taken to reduce subsequent releases to prevent recurrence of exceeding the above limits and includes the schedule for achieving conformance with the above limits. This Special Report, as defined in 10 CFR Part 20.2203(b), shall include an analysis which estimates the radiation exposure (dose) to a MEMBER OF THE PUBLIC from uranium fuel cycle sources, including all effluent pathways and direct radiation, for the calendar year that includes the release(s) covered by this report. It shall also describe levels of radiation and concentrations of radioactive material involved, and the cause of the exposure levels or concentrations. If the estimated dose(s) exceed the above limits, and if the release condition resulting in violation of 40 CFR 190 has not already been corrected, the Special Report shall include a request for a variance in accordance with the provisions of 40 CFR 190. Submittal of the report is considered a timely request, and a variance is granted until staff action on the request is complete.

HISTORY INFO

BASES

This control is provided to meet the dose limitations of 40 CFR Part 190 that have been incorporated into 10 CFR Part 20.1301(d). This control requires the preparation and submittal of a Special Report whenever the calculated doses from plant generated radioactive effluents and direct radiation exceed 25 mrem to the total body or any organ, except the thyroid, which shall be limited to less than or equal to 75 mrem. For sites containing up to 4 reactors, it is highly unlikely that the resultant dose to a MEMBER OF THE PUBLIC will exceed the dose limits of 40 CFR Part 190 if the individual reactors remain within twice the dose design objectives of Appendix I, and if direct radiation doses from the reactor units and outside storage tanks are kept small. The Special Report will describe a course of action that should result in the limitation of the annual dose to a MEMBER OF THE PUBLIC to within the 40 CFR Part 190 limits. For the purposes of the Special Report, it may be assumed that the dose commitment to the member of the public from other uranium fuel cycle sources is negligible, with the exception that dose contributions from other nuclear fuel cycle facilities at the same site or within a radius of 8 km must be considered. If the dose to any member of the public is estimated to exceed the requirements of 40 CFR Part 190, the Special Report with a request for a variance (provided the release conditions resulting in violation of 40 CFR Part 190 have not already been corrected), in accordance with the provisions of 40 CFR Part 190.11 and 10 CFR Part 20.2203(b), is considered to be a timely request and fulfills the requirements of 40 CFR Part 190 until NRC staff action is completed. The variance only relates to the limits of 40 CFR Part 190, and does not apply in any way to the other requirements for dose limitation of 10 CFR Part 20, as addressed in Controls 2.2.1.1 and 2.2.2.1. An individual is not considered a MEMBER OF THE PUBLIC during any period in which he/she is engaged in carrying out any operation that is part of the nuclear fuel cycle.

HISTORY ITEM

3.0 SURVEILLANCES

3.0.1 Surveillance Requirements shall be applicable during the conditions specified for individual Controls unless otherwise stated in an individual Surveillance Requirement. The Surveillance Requirements shall be performed to demonstrate compliance with the OPERABILITY requirements of the Control.

3.0.2 Each Surveillance Requirement shall be performed within the specified time interval with a maximum allowable extension not to exceed 25% of the surveillance interval.

3.0.3 Failure to perform a Surveillance Requirement within the time interval specified in Section 3.0.2 shall constitute non-compliance with OPERABILITY requirements for a Control. The time limits of the ACTION requirements are applicable at the time it is identified that a Surveillance Requirement has not been performed. The ACTION requirements may be delayed for up to 24 hours to permit completion of the surveillance when the allowable outage time limits of the ACTION requirements are less than 24 hours. Surveillance Requirements do not have to be performed on inoperable equipment.

3.1 Radioactive Effluent Instrumentation

3.1.1 Radioactive Liquid Effluent Instrumentation

Surveillance Requirements

Radioactive Liquid Effluent Instrumentation is common between TMI-1 and TMI-2. Surveillances for this instrumentation are specified in ODCM Part I, Surveillance 3.1.1.

3.1.2 Radioactive Gaseous Process and Effluent Monitoring Instrumentation

SURVEILLANCE REQUIREMENTS

3.1.2.1 Each radioactive gaseous process or effluent monitoring instrumentation channel shall be demonstrated OPERABLE by performance of the CHANNEL CHECK, SOURCE CHECK, CHANNEL CALIBRATION, and CHANNEL TEST operations at the frequencies shown in Table 3.1-2.

HISTORY INFO

Table 3.1-2

Radioactive Gaseous Process and Effluent Monitoring Instrumentation Surveillance Requirements

INSTRUMENT	CHANNEL CHECK	CHANNEL CALIBRATION	CHANNEL FUNCTIONAL TEST	APPLICABILITY
1. Containment Purge Monitoring System				
a. Noble Gas Activity Monitor (2HP-R-225)	D	E	M	NOTE 1
b. Particulate Sampler (2HP-R-225)	W	N/A	N/A	NOTE 1
2. Station Ventilation Monitoring System				
a. Noble Gas Activity Monitor (2HP-R-219) and (2HP-R-219A)	D	E	M	NOTE 1
b. Particulate Sampler (2HP-R-219) and (2HP-R-219A)	W	N/A	N/A	NOTE 1

NOTES:

1. During operation of the monitored system.

HISTORY INFO

3.2 Radioactive Effluents

3.2.1 Liquid Effluents

SURVEILLANCE REQUIREMENTS

3.2.1.1 Concentration

3.2.1.1.1 The radioactivity content of each batch of radioactive liquid waste shall be determined by sampling and analysis in accordance with Table 3.2-1. The results of analyses shall be used with the calculational methods in the ODCM to assure that the concentration at the point of release is maintained within the limits of Control 2.2.1.1.

3.2.1.1.2 Analysis of samples composited from batch releases shall be performed in accordance with Table 3.2-1. The results of the analysis shall be used with the calculational methods in the ODCM to assure that the concentrations at the point of release were maintained within the limits of Control 2.2.1.1.

3.2.1.1.3 The radioactivity concentration of liquids discharged from continuous release points shall be determined by collection and analysis of samples in accordance with Table 3.2-1. The results of the analysis shall be used with the calculational methods of the ODCM to assure that the concentration at the point of release is maintained within the limits of Control 2.2.1.1.

3.2.1.2 Dose Calculations

3.2.1.2.1 Cumulative dose contributions from liquid effluents shall be determined in accordance with the Offsite Dose Calculation Manual (ODCM) at least once a month.

3.2.1.3 Dose Projections

3.2.1.3.1 Doses due to liquid releases shall be projected at least once a month, in accordance with the ODCM.

HISTORY INFO

TABLE 3.2-1

Radioactive Liquid Waste Sampling and Analysis (4, 5)

A. Liquid Releases

Sampling Frequency	Type of Activity Analysis	Detectable Concentration (3)
P Each Batch	Individual Gamma H-3	5E-7 µCi/ml (2) 1E-5 µCi/ml
Q Quarterly Composite (1)	Gross Alpha Sr-90	1E-7 µCi/ml 5E-8 µCi/ml

NOTES:

(1) A COMPOSITE SAMPLE is one in which the quantity of liquid sampled is proportional to the quantity of liquid waste discharged from the plant.

(2) For certain mixtures of gamma emitters, it may not be possible to measure radionuclides in concentrations near this sensitivity limit when other nuclides are present in the sample in much greater concentrations. Under these circumstances, it will be more appropriate to calculate the concentrations of such radionuclides using measured ratios with those radionuclides which are routinely identified and measured.

(3) The detectability limits for radioactivity analysis are based on the technical feasibility and on the potential significance in the environment of the quantities released. For some nuclides, lower detection limits may be readily achievable and when nuclides are measured below the stated limits, they should also be reported.

(4) The results of these analyses should be used as the basis for recording and reporting the quantities of radioactive material released in liquid effluents during the sampling period. In estimating releases for a period when analyses were not performed, the average of the two adjacent data points spanning this period should be used. Such estimates should be included in the effluent records and reports; however, they should be clearly identified as estimates, and the method used to obtain these data should be described.

(5) Deviations from the sampling/analysis regime will be noted in the report specified in ODCM Part IV.

HISTORY INFO

3.2.2 Gaseous Effluents

SURVEILLANCE REQUIREMENTS

3.2.2.1 Dose Rates

3.2.2.1.1 The dose rate due to noble gases in gaseous effluents shall be determined to be within the limits of Control 2.2.2.1.a in accordance with the methods and procedures of the ODCM.

3.2.2.1.2 The dose rate of radioactive materials, other than noble gases, in gaseous effluents shall be determined to be within the limits of Control 2.2.2.1.b in accordance with methods and procedures of the ODCM by obtaining representative samples and performing analyses in accordance with the sampling and analysis program, specified in Table 3.2-2.

3.2.2.2 Dose, Noble Gas

3.2.2.2.1 Cumulative dose contributions from noble gas effluents for the current calendar quarter and current calendar year shall be determined in accordance with the OFFSITE DOSE CALCULATION MANUAL (ODCM) monthly.

3.2.2.3 Dose, Tritium and Radionuclides In Particulate Form

3.2.2.3.1 Cumulative dose contributions from Tritium and radionuclides in particulate form with half lives greater than 8 days for the current calendar quarter and current calendar year shall be determined in accordance with the OFFSITE DOSE CALCULATION MANUAL (ODCM) monthly.

3.2.2.4 Ventilation Exhaust Treatment

3.2.2.4.1 Doses due to gaseous releases from the unit shall be projected monthly in accordance with the ODCM.

HISTORY INFO

TABLE 3.2-2

Radioactive Gaseous Waste Sampling and Analysis (3)

SAMPLE POINT	SAMPLE TYPE	SAMPLING FREQUENCY	TYPE OF ACTIVITY ANALYSIS	DETECTABLE CONCENTRATION(1)(a)
Reactor Building Purge Releases	Gas	P	H-3	1E-6 µCi/cc
		Each Purge	Individual Gamma Emitters	1E-4 µCi/cc (2)
Unit Exhaust Vent Release Points	Gas	M	H-3	1E-6 µCi/cc
		Monthly	Individual Gamma Emitters	1E-4 µCi/cc (2)
	Particulates	W Weekly	Individual (b) Gamma Emitters	1E-10 µCi/cc (2)
		M Monthly Composite	Sr-90	1E-11 µCi/cc
		M Monthly Composite	Gross Alpha Emitters	1E-11 µCi/cc
Reactor Building Breather	Particulates	SA Semi-Annually	Indv. Gamma Emitters (b)	1E-10 µCi/cc (2)
			Sr-90	1E-11 µCi/cc
			Gross Alpha Emitters	1E-11 µCi/cc

(1) The above detectability limits are based on technical feasibility and on the potential significance in the environment of the quantities released. For some nuclides, lower detection limits may be readily achievable and when nuclides are measured below the stated limits, they should also be reported.

(2) For certain mixtures of gamma emitters, it may be possible to measure radionuclides at levels near their sensitivity limits when other nuclides are present in the sample at much higher levels. Under these circumstances, it will be more appropriate to calculate the levels of such radionuclides using observed ratios in the gaseous component in the reactor coolant for those radionuclides which are measurable.

(3) Deviations from the sampling and analysis regime will be noted in the report specified in ODCM Part IV.

HISTORY ONLY

TABLE 3.2-2

Radioactive Gaseous Waste Sampling and Analysis Program

Table Notation

a. The LLD is the smallest concentration of radioactive material in a sample that will be detected with 95% probability with 5% probability of falsely concluding that a blank observation represents a "real" signal.

For a particular measurement system (which may include radiochemical separation):

$$LLD = \frac{4.66\ s_b}{E \times V \times 2.22 \times 10^6 \times Y \times \exp(-\lambda \Delta t)}$$

Where

LLD is the lower limit of detection as defined above (as picocurie per unit mass or volume).

S_b is the standard deviation of the background counting rate or of the counting rate of a blank sample as appropriate (as counts per minute).

E is the counting efficiency (as counts per transformation),

V is the sample size (in units of mass or volume),

2.22 is the number of transformations per minute per picocurie,

Y is the fractional radiochemical yield (when applicable),

λ is the radioactive decay constant for the particular radionuclide, and

Δt is the elapsed time between midpoint of sample collection and time of counting (for plant effluents, not environmental samples),

The value of S_b used in the calculation of the LLD for a detection system shall be based on the actual observed variance of the background counting rate or of the counting rate of the blank samples (as appropriate) rather than on an unverified theoretically predicted variance. In calculating the LLD for a radionuclide determined by gamma-ray spectrometry, the background shall include the typical contributions of other radionuclides normally present in the samples. Typical values of E, V, Y, and Δt shall be used in the calculation. The background count rate is calculated from the background counts that are determined to be with ± one FWHM (Full-Width-at-Half-Maximum) energy band about the energy of the gamma-ray peak used for the quantitative analysis for that radionuclide.

HISTORY INFO

TABLE 3.2-2

b. The principal gamma emitters for which the LLD specification applies exclusively are the following radionuclides: Mn-54, Fe-59, Co-58, Co-60, Zn-65, Mo-99, Cs-134, Cs-137, Ce-141 and Ce-144 for particulate emissions. This list does not mean that only these nuclides are to be detected and reported. Other peaks which are measurable and identifiable, together with the above nuclides, shall also be identified and reported. Nuclides which are below the LLD for the analyses shall be reported as "less than" the nuclide's LLD and shall not be reported as being present at the LLD level for that nuclide. The "less than" values shall not be used in the required dose calculations.

HISTORY INFO

3.2.3 Total Radioactive Effluents

3.2.3.1 Dose Calculation

3.2.3.1.1 Cumulative annual dose contributions from liquid and gaseous effluents shall be determined in accordance with Surveillances 3.2.1.2.1, 3.2.2.2.1, and 3.2.2.3.1, including direct radiation contributions from the Unit and from outside storage tanks, and in accordance with the methodology contained in the ODCM.

HISTORY INFO

4.0 PART II REFERENCES

4.1 NUREG-0683, "Final Programmatic Environmental Impact Statement related to decontamination and disposal of radioactive wastes resulting from March 28, 1979, accident Three Mile Island Nuclear Station, Unit 2," March 1981, and its supplements.

4.2 TMI-2 PDMS Technical Specifications, attached to Facility License No. DPR-73

4.3 Title 10, Code of Federal Regulations, "Energy"

4.4 "Statement of Policy Relative to the NRC Programmatic Environmental Impact Statement on the Cleanup of Three Mile Island Unit 2," dated April 27, 1981

4.5 Regulatory Guide 1.109, "Calculation of Annual Doses to Man from Routine Releases of Reactor Effluents for the Purpose of Evaluating Compliance with 10 CFR Part 50, Appendix I," Revision 1, October 1977

4.6 DOE/TIC-27601, Atmospheric Science and Power Reduction

4.7 TMI-1 Technical Specifications, attached to Facility Operating License No. DPR-50

4.8 PDMS - SAR

HISTORY INFO

HISTORY INFO

PART III

EFFLUENT DATA AND CALCULATIONAL METHODOLOGIES

1.0 LIQUID EFFLUENT MONITORS

1.1 TMI-1 and TMI-2 Liquid Radiation Monitor Set Points

The liquid effluent off-line monitors are set such that the concentration(s) of radionuclides in the liquid effluents will not exceed ten times the concentrations specified in 10 CFR 20, Appendix B Table 2, Col 2. Table 1.1 lists the Liquid Effluent Release Points and their parameters; Figure 1.1 provides a Liquid Release Pathway Diagram.

To meet the above limit, the alarm/trip set points for liquid effluent monitors and flow measuring devices are set in accordance with the following equation:

$$\frac{c * f}{F + f} \leq C \qquad \text{(eq 1.1)}$$

where:

C = ten times the effluent concentration of 10 CFR 20 for the site, in µCi/ml.

c = the set point, in µCi/ml, of the liquid effluent monitor measuring the radioactivity concentration in the effluent line prior to dilution and release. The set point is inversely proportional to the maximum volumetric flow of the effluent line and proportional to the minimal volumetric flow of the dilution stream plus the effluent stream. The alert set point value is set to ensure that advance warning occurs prior to exceeding any limits. The high alarm set point value is such that if it were exceeded, it would result in concentrations exceeding ten times the 10 CFR 20 concentrations for the unrestricted area.

f = flow set point as measured at the radiation monitor location, in volume per unit time, but in the same units as F below.

F = flow rate of dilution water measured prior to the release point, in volume per unit time.

The set point concentration is reduced such that concentration contributions from multiple release points would not combine to exceed ten times 10 CFR 20 concentrations. The set point concentration is converted to set point scale units using appropriate radiation monitor calibration factors.

This section of the ODCM is implemented by the Radiation Monitor System Set Points procedure and, for batch releases, the Releasing Radioactive Liquid Waste procedure.

HISTORY INFO

1.2 TMI Liquid Effluent Release Points and Liquid Radiation Monitor Data

TMI-1 has two required liquid radiation monitors. These are RM-L6 and RM-L12. These liquid release point radiation monitors and sample points are shown in Table 1.1. (The TMI outfall radiation monitor, RM-L7, is also listed for information only.)

TMI-2 does not have any required liquid radiation monitors, but does utilize RM-L12, and RM-L7 for release of liquid waste.

1.2.1 RM-L6

RM-L6 is an off-line system, monitoring radioactive batch discharges from the TMI-1 liquid radwaste system (see Figure 1.1). These batch releases are sampled and analyzed per site procedures prior to release. The release rate is based on releasing one of two Waste Evaporator Condensate Storage Tanks (WECST) at a flow which will add less than 10%, of ten times the 10 CFR 20 concentrations to radionuclide concentrations in the unrestricted area, including conservative default values for Sr-89, Sr-90, and Fe-55.

The release flow rate used is the most restrictive of three flow rates calculated for each liquid batch release, per the approved plant procedure.

Three Dilution Factors (DF) are calculated to ultimately calculate the batch release flow rate. These three DF's are calculated to: 1) insure each radionuclide released to the unrestricted area is less than 10 percent of ten times the 10CFR20 radionuclide concentrations, 2) ensure each liquid batch release boron concentration to the river will not exceed 0.7 ppm, and 3), ensure ten times the 10CFR20 concentration for Cesium-137 (1E-5 μCi/ml) will not be exceeded based on the calculated high alarm set point and the expected response of RM-L6 to this concentration of Cs-137.

The maximum release flow rate is then calculated by dividing the most restrictive (largest) DF into 90 percent of the current dilution flow rate of the Mechanical Draft Cooling Tower (MDCT). This conservative flow rate is then multiplied by 0.9 for the allowable flow rate.

- **Calculation of 10 percent 10% of ten times the 10CFR20 concentration DF:**

  $DF_1 = \Sigma (SA_i) \div$ (10% of ten times the 10CFR20 concentration)

  SA_i = Specific Activity of each identified radionuclide

- **Calculation of Boron DF:**

  DF_2 = Actual Tank Boron Concentration ÷ 0.7.

- **Calculation of Cs-137 Limit:**

  DF_3 = High Alarm Set Point ÷ (1E-5 μCi/ml * 1.05E8 cpm per μCi/ml)

- **Maximum release flow rate calculation:**

  Max Flow = [(MDCT flow gpm * 0.9) ÷ (Most Restrictive DF)] * 0.9

HISTORY INFO

The dilution flow rate used is the current flow rate at the site. The minimum dilution flow rate is 5000 gpm per the TMI-1 FSAR. This ensures this batch release will meet the following equation.

$$\Sigma(C_i/X_i) \leq 0.10, \qquad \text{(eq 1.2)}$$

where: C_i = diluted concentration of the ith radionuclide,

X_i = Ten times the concentration for that radionuclide in the unrestricted area (10 CFR 20, App. B, Table 2, Col. 2). A value of 3E-3 μCi/ml for dissolved and entrained noble gases shall be used.

The set points for RM-L6 are set for each release based on the monitor response to each radionuclide identified in the gamma scan sample results as follows:

$$(1.5)^* [\Sigma i\ (\mu Ci/cc)_i^*(CPM/\mu Ci/cc)_i] + (CPM_{BKD}) = \text{ALERT CPM}$$

$$(2.0)^* [\Sigma i\ (\mu Ci/cc)_i\ (CPM/\mu Ci/cc)_i] + (CPM_{BKD}) = \text{HIGH ALARM CPM}$$

where: $(\mu Ci/cc)_i$ = positively identified radionuclides

$(CPM/\mu Ci/cc)_i$ = RM-L6 sensitivity to radionuclide i.

(CPM_{BKD}) = RM-L6 background prior to batch release

A high alarm on RM-L6 will close valve WDL-V-257 and terminate any WECST releases to the environment.

1.2.2 RM-L12

RM-L12 is an off-line system, monitoring periodic combined releases from the Industrial Waste Treatment System/Industrial Waste Filtration System (IWTS/IWFS). The input to IWTS/IWFS originates in TMI-2 sumps, (see Figures 1.1 and 1.2) and the TMI-1 Turbine Building sump (see Figure 1.1). The set points are based on the maximum release rate from both IWTS and IWFS simultaneously, (see Figure 1.1) a minimum dilution flow rate, and 50% of ten times the 10CFR20 concentration for Cs-137, which is the most limiting radionuclide at a concentration of 1E-5 μCi/ml. These inputs are used in equation 1.1 to determine the RM-L12 High Alarm set point for all radionuclides being released. A high alarm on RM-L12 will close IWTS and IWFS release valves and trip release pumps to stop the release.

1.2.3 RM-L10

RM-L10 was a NaI detector submerged in the TMI-1 Turbine Building Sump. This detector has been removed from service.

1.2.4 RM-L7

RM-L7 is not an ODCM required liquid radiation monitor. RM-L7 is an off-line system, monitoring the TMINS outfall to the Susquehanna River (see Figures 1.1 and 1.2). This monitor is the final radiation monitor for TMI-1 and TMI-2 normal liquid effluent releases.

HISTORY INFO

1.3 Control of Liquid Releases

TMI liquid effluent releases are controlled to less than ten times the 10CFR20 concentrations by limiting the percentage of this limit allowable from the two TMI liquid release points. RM-L6, and effluent sampling, limits batch releases to less than or equal to 10% for all radionuclides, and RM-L12, and effluent sampling, limits releases from TMI-1 and TMI-2 to less than or equal to 50% for Cs-137.

These radiation monitor set points also include built in meter error factors to further ensure that TMI liquid effluent releases are less than ten times the 10CFR20 concentrations to the environment.

The radioactivity content of each batch of radioactive liquid waste is determined prior to release by sampling and analysis in accordance with ODCM Part I Table 3.2-1 or ODCM Part II, Table 3.2-1. The results of analyses are used with the calculational methods in Section 1.1, to assure that the concentration at the point of release is maintained within the ODCM Part I Control 2.2.1.1, and ODCM Part II Control 2.2.1.1.

Post-release analysis of samples composited from batch releases are performed in accordance with ODCM Part I Table 3.2-1 or ODCM Part II Table 3.2-1. The results of the previous post-release analysis shall be used with the calculational methods in the ODCM to assure that the concentrations at the point of release were maintained within the ODCM Part I Control 2.2.1.1, and ODCM Part II Control 2.2.1.1.

The radioactivity concentration of liquids discharged from continuous release points are determined by collection and analysis of samples in accordance with ODCM Part I Table 3.2-1, or ODCM Part II Table 3.2-1. The results of the analysis are used with the calculational methods of the ODCM to assure that the concentration at the point of release is maintained within the ODCM Part I Control 2.2.1.1, and ODCM Part II Control 2.2.1.1.

HISTORY FILE

TABLE 1.1

TMI Liquid Release Point and Liquid Radiation Monitor Data

LIQUID RADIATION MONITOR (DETECTOR)	LOCATION	LIQUID RELEASE POINT (Maximum Volume)	DISCHARGE FLOW RECORDER	RELEASE TERMINATION INTERLOCK (YES/NO) VALVES
RM-L6 (NaI)	281' Elevation TMI-1 Auxiliary Bldg	WECST Batch Releases (8000 gal.)	FT-84	YES WDL-V257
RM-L7 (NaI) **	South end of TMI-1 MDCT	Station Discharge TMI-1 and TMI-2,	FT-146	YES WDL-V257 *WDL-R-1311
RM-L12 (NaI)	IWFS Building NW Corner	IWTS/IWFS Continuous Releases (300,000/ 80,000 gal.)	FT-342/ FT-373	YES IW-V73, IW-P16,17,18 IW-V279, IW-P29,30

* WDL-R-1311 has been flanged off as a TMI-2 liquid outfall.
** RM-L7 is not an ODCM required liquid radiation monitor.

HISTORY INFO

TABLE 1.2

TMI-2 Sump Capacities

Sump	Total Capacity Gallons	Gallons per Inch
Turbine Building Sump	1346	22.43
Circulating Water Pump House Sump	572	10.59
Control Building Area Sump	718	9.96
Tendon Access Galley Sump	538	9.96
Control to Service Building Sump	1346	22.43
Contaminated Drain Tank Room Sump	135	3.80
Chlorinator House Sump	----	----
Water Treatment Sump**	1616	22.43
Air Intake Tunnel Normal Sump	700	---
Air Intake Tunnel Emergency Sump	100000	766.00
Condensate Polisher Sump*	2617	62.31
Sludge Collection Sump**	1106	26.33
Heater Drain Sump	---	----
Solid Waste Staging Facility Sump	1476	24.00
Auxiliary Building Sump	10102	202.00
Decay Heat Vault Sump	479	10.00
Building Spray Vault Sump	479	10.00

* Condensate Polisher Sump is deactivated and in PDMS condition.
** The Water Treatment and Sludge Collection Sumps will be deactivated for PDMS.

HISTORY INFO

Figure 1.1
TMI-1 Liquid Effluent Pathways

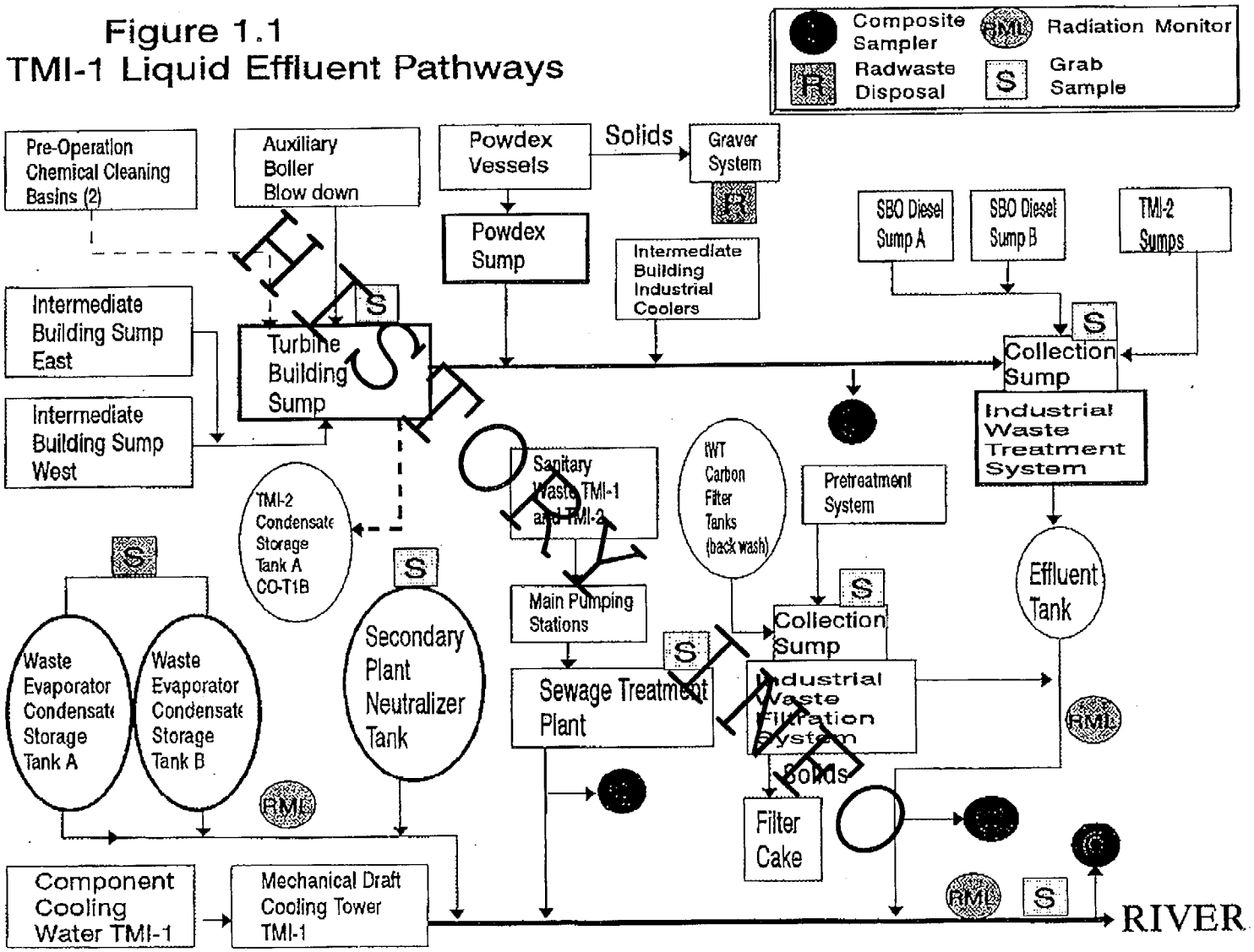

FIGURE 1.2

TMI-2 Liquid Effluent Pathways

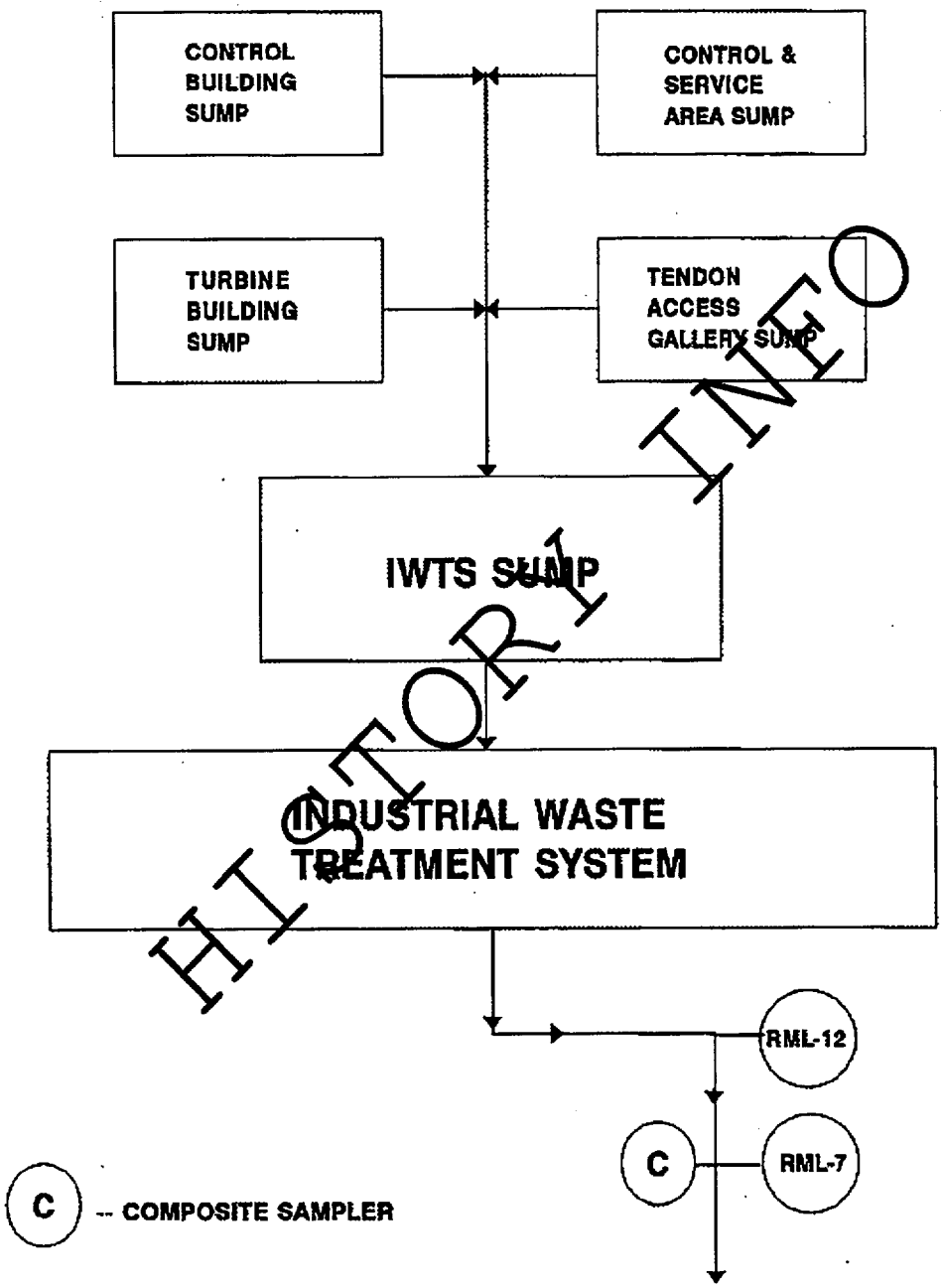

HISTORICAL

2.0 LIQUID EFFLUENT DOSE ASSESSMENT

2.1 Liquid Effluents - 10 CFR 50 Appendix I

The dose from liquid effluents results from the consumption of fish and drinking water. The location of the nearest potable water intake is PP&L Brunner Island Steam Electric Station located downstream of TMI. The use of the flow of the Susquehanna River as the dilution flow is justified based on the complete mixing in the river prior to the first potable water supply, adequately demonstrated by flume tracer die studies and additional liquid effluent release studies conducted using actual TMI-1 tritium releases. Other pathways contribute negligibly at Three Mile Island. The dose contribution from all radionuclides in liquid effluents released to the unrestricted area is calculated using the following expression:

$$\text{Dose } j = \sum_i \sum_j (\Delta t) \times (C_i) \times \left[\left(AW_{ij} \times \frac{f}{FR} \right) + \left(AF_{ij} \times \frac{f}{FD} \times \frac{1}{DF} \right) \right] \qquad \text{(eq 2.1)}$$

where:

Dose j = the cumulative dose commitment to the total body or any organ, j, from the liquid effluents for the total time period, in mrem.

Δt = the length of the time period of actual releases, over which C_i and f are averaged for all liquid releases, in hours.

C_i = the average concentration of radionuclide, i, in undiluted liquid effluent during time period Δt from any liquid release, in µCi/ml.

> **NOTE**
>
> For Fe-55, Sr-89, Sr-90, prior to batch releases conservative concentration values will be used in the initial dose calculation based on similar past plant conditions. MLD values are not used in dose calculations.

f = undiluted liquid waste flow, in gpm.

FD = plant dilution water flowrate during the period of release, in gpm

FR = actual river flowrate during the period of release or average river flowrate for the month the release is occurring, in gpm.

DF = dilution factor as a result of mixing effects in the near field of the discharge structure of 0.2 (NUREG 0133) or taken to be 5 based on the inverse of 0.2.

AWij and AFij = the site-related ingestion dose commitment factor to the total body or any organ, j, for each identified principle gamma and beta emitter, in mrem/hr per µCi/ml. AW is the factor for the water pathway and AF is the factor for the fish pathway.

Values for AWij are determined by the following equation:

$$AW_{ij} = (1.14E5) \times (U_w) \times (DF_{ij}) \qquad \text{(eq 2.2)}$$

HISTORY INFO

where:

1.14E5 = (1.0E6 pCi/μCi) x (1.0E3 ml/kg) ÷ (8760 hr/yr)

Uw = Water consumption rate for adult is 730 kg/yr (Reg. Guide 1.109, Rev. 1).

DFij = ingestion dose conversion factor for radionuclide, i, for adults total body and for "worst case" organ, j, in mrem/pCi, from Table 2.1 (Reg. Guide 1.109)

Values for AF_{ij} are determined by the following equation:

AFij = (1.14E5) x (Uf) x (DFij) x (BFi) (eq 2.2.2)

where:

1.14E5 = defined above

Uf = adult fish consumption, assumed to be 21 kg/yr (Reg. Guide 1.109, Rev. 1).

DFij = ingestion dose conversion factor for radionuclide, i, for adult total body and for "worst case" organ, j, in mrem/pCi, from Table 2.1 (Reg. Guide 1.109, Rev. 1).

BFi = Bioaccumulation factor for radionuclide, i, in fish, in pCi/kg per pCi/L from Table 2.2 (Reg. Guide 1.109, Rev. 1).

2.2 TMI Liquid Radwaste System Dose Calcs Once/Month

ODCM Part I Control 2.2.1.3 and TMI-2 PDMS Tech Spec Section 6.7.4.a.6 requires that appropriate portions of the liquid radwaste treatment system shall be used to reduce the radioactive materials in liquid wastes prior to their discharge when the monthly projected doses due to the liquid effluent releases from each unit to unrestricted areas would exceed 0.06 mrem to the total body or 0.2 mrem to any organ in any calendar month. The following calculational method is provided for performing this dose projection.

At least once per month, the total dose from all liquid releases for the quarter-to-date will be divided by the number of days into the quarter and multiplied by 31. Also, this dose projection shall include the estimated dose due to any anticipated unusual releases during the period for which the projection is made. If this projected dose exceeds 0.06 mrem total body or 0.2 mrem any organ, appropriate portions of the Liquid Radwaste Treatment System, as defined in Section 3.1, shall be used to reduce radioactivity levels prior to release.

At the discretion of Radiological Engineering, time periods other than the current quarter-to-date may be used to project doses if the dose per day in the current quarter-to-date is not believed to be representative of the dose per day projected for the next month.

HISTORY INFO

2.3 Alternative Liquid Dose Calculational Methodology

As an alternative, models in, or based upon, those presented in Regulatory Guide 1.109 (Rev. 1) may be used to make a comprehensive dose assessment. Default parameter values from Reg. Guide 1.109 (Rev. 1) and/or actual site specific data are used where applicable.

As an alternative dose calculational methodology GPU Nuclear calculates doses using SEEDS (simplified environmental effluent dosimetry system).

The onsite and SEEDS calculational models use actual liquid release data with actual monthly Susquehanna River flow data to assess the dispersion of effluents in the river.

HISTORY INFO

TABLE 2.1

Liquid Dose Conversion Factors (DCF): DF_{ij}

Page 1 of 3

Ingestion Dose Factors for Adults*
(MREM Per PCI Ingested)

NUCLIDE		BONE	LIVER	T. BODY	THYROID	KIDNEY	LUNG	GI-LLI
H	3	NO DATA	1.05E-07	1.05E-07	1.05E-07	1.05E-07	1.05E-07	1.05E-07
C	14	2.84E-06	5.68E-07	5.68E-07	5.68E-07	5.68E-07	5.68E-07	5.68E-07
NA	24	1.70E-06	1.70E-06	1.70E-06	1.70E-06	1.70E-06	1.70E-06	1.70E-06
CR	51	NO DATA	NO DATA	2.66E-09	1.59E-09	5.86E-10	3.53E-09	6.69E-07
MN	54	NO DATA	4.57E-06	8.72E-07	NO DATA	1.36E-06	NO DATA	1.40E-05
MN	56	NO DATA	1.15E-07	2.04E-08	NO DATA	1.46E-07	NO DATA	3.67E-06
FE	55	2.75E-06	1.90E-06	4.43E-07	NO DATA	NO DATA	1.06E-06	1.09E-06
FE	59	4.34E-06	1.02E-05	3.91E-06	NO DATA	NO DATA	2.85E-06	3.40E-05
CO	58	NO DATA	7.45E-07	1.67E-06	NO DATA	NO DATA	NO DATA	1.51E-05
CO	60	NO DATA	2.14E-06	4.72E-06	NO DATA	NO DATA	NO DATA	4.02E-05
NI	63	1.30E-04	9.01E-06	4.36E-06	NO DATA	NO DATA	NO DATA	1.88E-06
NI	65	5.28E-07	6.86E-08	3.12E-08	NO DATA	NO DATA	NO DATA	1.74E-06
CU	64	NO DATA	8.33E-08	3.91E-08	NO DATA	2.10E-07	NO DATA	7.10E-06
ZN	65	4.84E-06	1.54E-05	6.96E-08	NO DATA	1.03E-05	NO DATA	9.70E-06
ZN	69	1.03E-08	1.97E-08	1.37E-09	NO DATA	1.28E-08	NO DATA	2.96E-09
BR	83	NO DATA	NO DATA	4.02E-08	NO DATA	NO DATA	NO DATA	5.79E-08
BR	84	NO DATA	NO DATA	5.21E-08	NO DATA	NO DATA	NO DATA	4.09E-13
BR	85	NO DATA	NO DATA	2.14E-09	NO DATA	NO DATA	NO DATA	LT E-24
RB	86	NO DATA	2.11E-05	9.83E-06	NO DATA	NO DATA	NO DATA	4.16E-06
RB	88	NO DATA	6.05E-08	3.21E-08	NO DATA	NO DATA	NO DATA	8.36E-19
RB	89	NO DATA	4.01E-08	2.82E-08	NO DATA	NO DATA	NO DATA	2.33E-21
SR	89	3.08E-04	NO DATA	8.84E-06	NO DATA	NO DATA	NO DATA	4.94E-05
SR	90	7.58E-03	NO DATA	1.86E-03	NO DATA	NO DATA	NO DATA	2.19E-04
SR	91	5.67E-06	NO DATA	2.29E-07	NO DATA	NO DATA	NO DATA	2.70E-05
SR	92	2.15E-06	NO DATA	9.30E-08	NO DATA	NO DATA	NO DATA	4.26E-05
Y	90	9.62E-09	NO DATA	2.58E-10	NO DATA	NO DATA	NO DATA	1.02E-04

HISTORY INFO

TABLE 2.1

Liquid Dose Conversion Factors (DCF): DF_{ij}

Page 2 of 3

Ingestion Dose Factors for Adults*
(MREM Per PCI Ingested)

NUCLIDE		BONE	LIVER	T. BODY	THYROID	KIDNEY	LUNG	GI-LLI
Y	91M	9.09E-11	NO DATA	3.52E-12	NO DATA	NO DATA	NO DATA	2.67E-10
Y	91	1.41E-07	NO DATA	3.77E-09	NO DATA	NO DATA	NO DATA	7.76E-05
Y	92	8.45E-10	NO DATA	2.47E-11	NO DATA	NO DATA	NO DATA	1.48E-05
Y	93	2.68E-09	NO DATA	7.40E-11	NO DATA	NO DATA	NO DATA	8.50E-05
ZR	95	3.04E-08	9.75E-09	6.60E-09	NO DATA	1.53E-08	NO DATA	3.09E-05
ZR	97	1.68E-09	3.39E-10	1.55E-10	NO DATA	5.12E-10	NO DATA	1.05E-04
NB	95	6.22E-09	3.46E-09	1.86E-09	NO DATA	3.42E-09	NO DATA	2.10E-05
MO	99	NO DATA	4.31E-06	8.20E-07	NO DATA	9.76E-06	NO DATA	9.99E-06
TC	99M	2.47E-10	6.98E-10	8.89E-09	NO DATA	1.06E-08	3.42E-10	4.13E-07
TC	101	2.54E-10	3.66E-10	3.59E-09	NO DATA	6.59E-09	1.87E-10	1.10E-21
RU	103	1.85E-07	NO DATA	7.97E-08	NO DATA	7.06E-07	NO DATA	2.16E-05
RU	105	1.54E-08	NO DATA	6.08E-09	NO DATA	1.99E-07	NO DATA	9.42E-06
RU	106	2.75E-06	NO DATA	3.48E-07	NO DATA	5.31E-06	NO DATA	1.78E-04
AG	110M	1.60E-07	1.48E-07	8.79E-08	NO DATA	2.91E-07	NO DATA	6.04E-05
SB	125	1.79E-06	2.00E-08	4.26E-07	1.82E-09	0.0	1.38E-06	1.97E-05
TE	125M	2.68E-06	9.71E-07	3.59E-07	8.06E-07	1.09E-05	NO DATA	1.07E-05
TE	127M	6.77E-06	2.42E-06	8.25E-07	1.73E-06	2.75E-05	NO DATA	2.27E-05
TE	127	1.10E-07	3.95E-08	2.38E-08	8.15E-08	4.48E-07	NO DATA	8.68E-06
TE	129M	1.15E-05	4.29E-06	1.82E-06	3.95E-06	4.80E-05	NO DATA	5.79E-05
TE	129	3.14E-08	1.18E-08	7.65E-09	2.41E-08	1.32E-07	NO DATA	2.37E-08
TE	131M	1.73E-06	8.46E-07	7.05E-07	1.34E-06	8.57E-06	NO DATA	8.40E-05
TE	131	1.97E-08	8.23E-09	6.22E-09	1.62E-08	8.63E-08	NO DATA	2.79E-09
TE	132	2.52E-06	1.63E-06	1.53E-06	1.80E-06	1.57E-05	NO DATA	7.71E-05
I	130	7.56E-07	2.23E-06	8.80E-07	1.89E-04	3.48E-06	NO DATA	1.92E-06
I	131	4.16E-06	5.95E-06	3.41E-06	1.95E-03	1.02E-05	NO DATA	1.57E-06
I	132	2.03E-07	5.43E-07	1.90E-07	1.90E-05	8.65E-07	NO DATA	1.02E-07
I	133	1.42E-06	2.47E-06	7.53E-07	3.63E-04	4.31E-06	NO DATA	2.22E-06
I	134	1.06E-07	2.88E-07	1.03E-07	4.99E-06	4.58E-07	NO DATA	2.51E-10

HISTORY INFO

TABLE 2.1

Liquid Dose Conversion Factors (DCF): DF_{ij}

Page 3 of 3

Ingestion Dose Factors for Adults*
(MREM Per PCI Ingested)

NUCLIDE		BONE	LIVER	T. BODY	THYROID	KIDNEY	LUNG	GI-LLI
I	135	4.43E-07	1.16E-06	4.28E-07	7.65E-05	1.86E-06	NO DATA	1.31E-06
CS	134	6.22E-05	1.48E-04	1.21E-04	NO DATA	4.79E-05	1.59E-05	2.59E-06
CS	136	6.51E-06	2.57E-05	1.85E-05	NO DATA	1.43E-05	1.96E-06	2.92E-06
CS	137	7.97E-05	1.09E-04	7.14E-05	NO DATA	3.70E-05	1.23E-05	2.11E-06
CS	138	5.52E-08	1.09E-07	5.40E-08	NO DATA	8.01E-08	7.91E-09	4.65E-13
BA	139	9.70E-08	6.91E-11	2.84E-09	NO DATA	6.46E-11	3.92E-11	1.72E-07
BA	140	2.03E-05	2.55E-08	1.33E-06	NO DATA	8.67E-09	1.46E-08	4.18E-05
BA	141	4.71E-08	3.56E-11	1.59E-09	NO DATA	3.31E-11	2.02E-11	2.22E-17
BA	142	2.13E-08	2.19E-11	1.34E-09	NO DATA	1.85E-11	1.24E-11	3.00E-26
LA	140	2.50E-09	1.26E-09	3.33E-10	NO DATA	NO DATA	NO DATA	9.25E-05
LA	142	1.28E-10	5.82E-11	1.45E-11	NO DATA	NO DATA	NO DATA	4.25E-07
CE	141	9.36E-09	6.33E-09	7.18E-10	NO DATA	2.94E-09	NO DATA	2.42E-05
CE	143	1.65E-09	1.22E-06	1.39E-10	NO DATA	5.37E-10	NO DATA	4.56E-05
CE	144	4.88E-07	2.04E-07	2.62E-08	NO DATA	1.21E-07	NO DATA	1.65E-04
PR	143	9.20E-09	3.69E-09	4.56E-10	NO DATA	2.13E-09	NO DATA	4.03E-05
PR	144	3.01E-11	1.25E-11	1.53E-12	NO DATA	7.05E-12	NO DATA	4.33E-18
ND	147	6.29E-09	7.27E-09	4.35E-10	NO DATA	4.25E-09	NO DATA	3.49E-05
W	187	1.03E-07	8.61E-08	3.01E-08	NO DATA	NO DATA	NO DATA	2.82E-05
NP	239	1.19E-09	1.17E-10	6.45E-11	NO DATA	3.65E-10	NO DATA	2.40E-05

* Dose factors of internal exposure are for continuous intake over a one-year period and include the dose commitment over a 50-year period; from Reg. Guide 1.109 (Rev. 1). Additional dose factors for nuclides not included in this table may be obtained from NUREG-0172.

HISTORY INFO

TABLE 2.2

Bioaccumulation Factors, BF_i

Bioaccumulation Factors to be Used in the Absence of Site-Specific Data*
(pCi/kg per pCi/liter)

ELEMENT	FRESHWATER	
	FISH	INVERTEBRATE
H	9.0E-01	9.0E-01
C	4.6E+03	9.1E+03
NA	1.0E+02	2.0E+02
CR	2.0E+02	2.0E+03
MN	4.0E+02	9.0E+04
FE	1.0E+02	3.2E+02
CO	5.0E+01	2.0E+02
NI	1.0E+02	1.0E+02
CU	5.0E+01	4.0E+02
ZN	2.0E+03	1.0E+04
BR	4.2E+02	3.3E+02
RB	2.0E+03	1.0E+03
SR	3.0E+01	1.0E+02
Y	2.5E+01	1.0E+03
ZR	3.3E+00	6.7E+00
NB	3.0E+04	1.0E+02
MO	1.0E+01	1.0E+01
TC	1.5E+01	5.0E+00
RU	1.0E+01	3.0E+02
RH	1.0E+01	3.0E+02
***AG-110m	2.30E+1	7.70E+2
**SB	1.0E+00	1.0E+00
TE	4.0E+02	6.1E+03
I	1.5E+01	5.0E+00
CS	2.0E+03	1.0E+03
BA	4.0E+00	2.0E+02
LA	2.5E+01	1.0E+03
CE	1.0E+00	1.0E+03
PR	2.5E+01	1.0E+03
ND	2.5E+01	1.0E+03
W	1.2E+03	1.0E+01
NP	1.0E+01	4.0E+02

* Bioaccumulation factor values are taken from Reg. Guide 1.109 (Rev. 1), Table A-1j.

** Sb bioaccumulation factor value is taken from EPRI NP-3840.

*** Ag bioaccumulation factor value is taken from Reg. Guide 1.109 (Rev. 0), Table A-8.

HISTORY INFO

3.0 TMI LIQUID EFFLUENT WASTE TREATMENT SYSTEMS

3.1 TMI-1 Liquid Effluent Waste Treatment System

3.1.1 Description of the Liquid Radioactive Waste Treatment System (see Figure 3.1)

Reactor Coolant Train

a. Water Sources - (3) Reactor Coolant Bleed Tanks (RCBT)
- (1) Reactor Coolant Drain Tank (RCDT)

b. Liquid Processing - Reactor Coolant Waste Evaporator (see Figure 3.2)
- Demineralizers prior to release

c. Liquid Effluent for Release - (2) Waste Evaporator Condensate Storage Tanks
- (WECST)

d. Dilution - Mechanical Draft Cooling Tower (0-38k gpm)
- River Flow (2E7 gpm average)

Miscellaneous Waste Train

a. Water sources: - Auxiliary Building Sump
- Reactor Building Sump
- Miscellaneous Waste Storage Tank
- Laundry Waste Storage Tank
- Neutralizer Mixing Tank
- Neutralizer Feed Tank
- Used Precoat Tank
- Borated Water Tank Tunnel Sump
- Heat Exchanger Vault Sump
- Tendon Access Galley Sump
- Spent Fuel Pool Room Sump
- TMI-2 Miscellaneous Waste Holdup Tank

b. Liquid Processing - Miscellaneous Waste Evaporator, MWE (see Figure 3.2)
- Demineralizers prior to release

c. Liquid Effluent for Release - (2) Waste Evaporator Condensate Storage Tanks
- (WECST)

d. Dilution - Mechanical Draft Cooling Tower (0-38k gpm)
- River Flow (2E7 gpm average)

HISTORY INFO

3.2 Operability of the TMI-1 Liquid Effluent Waste Treatment System

3.2.1 The TMI-1 Liquid Waste Treatment System as described in Section 11 of the TMI-1 Final Safety Analysis Report is considered to be operable when one of each of the following pieces of equipment is available to perform its intended function:

a) Miscellaneous Waste Evaporator (WDL-Z1B) or Reactor Coolant Evaporator (WDL-Z1A)

b) Waste Evaporator Condensate Demineralizer (WDL-K3 A or B)

c) Waste Evaporator Condensate Storage Tank (WDL-T 11 A or B)

d) Evaporator Condensate Pumps (WDL-P 14 A or B)

3.2.2 TMI-1 Representative Sampling Prior to Discharge

All liquid releases from the TMI-1 Liquid Waste Treatment System are made through the Waste Evaporator Condensate Storage Tanks. To provide thorough mixing and a representative sample, the contents of the tank are recirculated using one of the Waste Evaporator Condensate Transfer Pumps.

3.3 TMI-2 Liquid Effluent Waste Treatment System

3.3.1 Description of the TMI-2 Liquid Radioactive Waste Treatment System

The TMI-2 Liquid Radioactive Waste Treatment System has been out of service since the TMI-2 Accident in 1979. TMI-2 Liquid Radioactive Waste is processed by the TMI-1 system described in Section 3.1 prior to release. In addition, TMI-2 releases water from various sumps and tanks to the river (see Figures 1.1 and 1.2). These processes are governed by plant procedures that encompass proper sampling, sample analysis, and radiation monitoring techniques.

HISTORY INFO

FIGURE 3.1

TMI-1 Liquid Radwaste

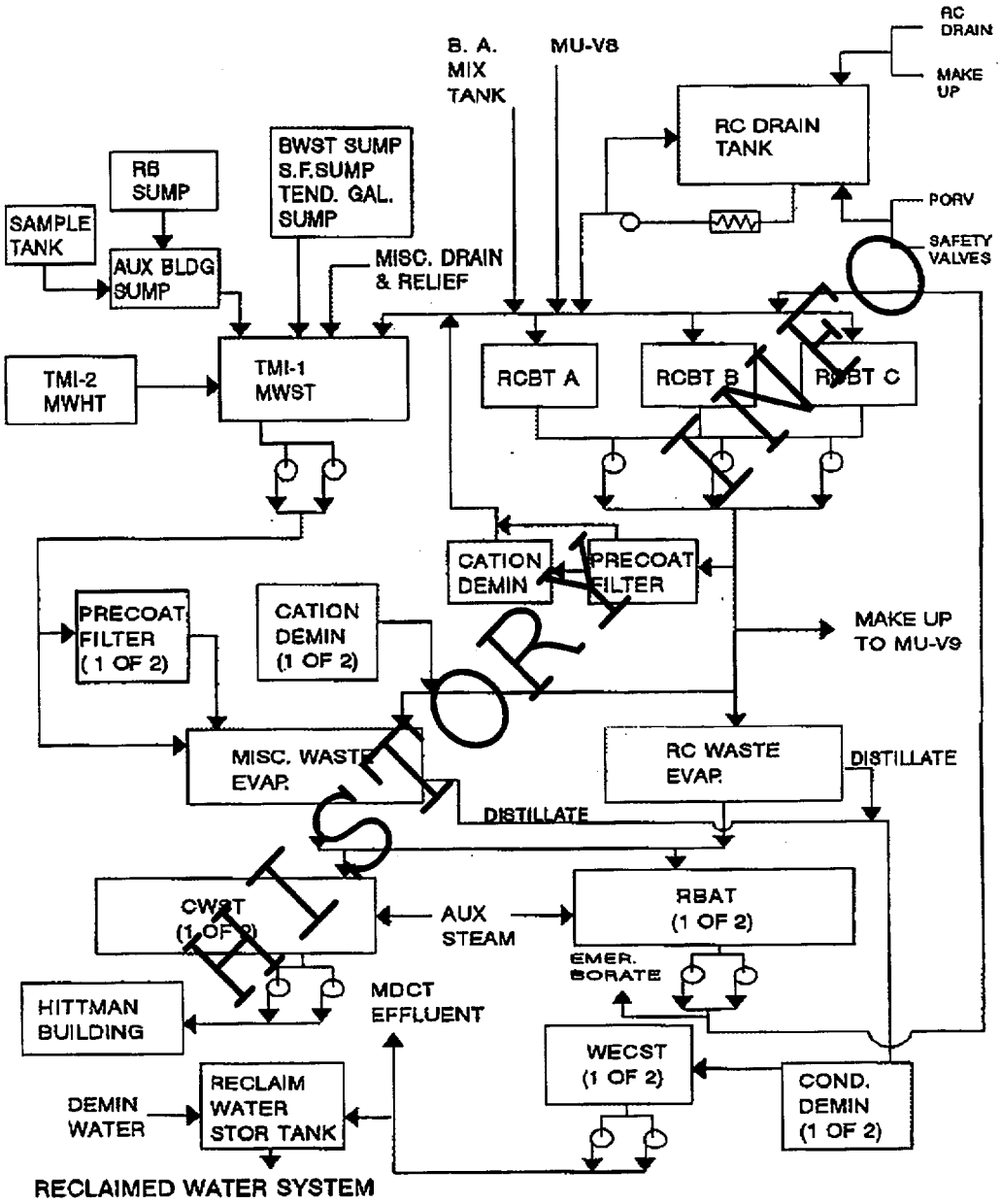

HISTORY ONLY

FIGURE 3.2

TMI-1 Liquid Waste Evaporators

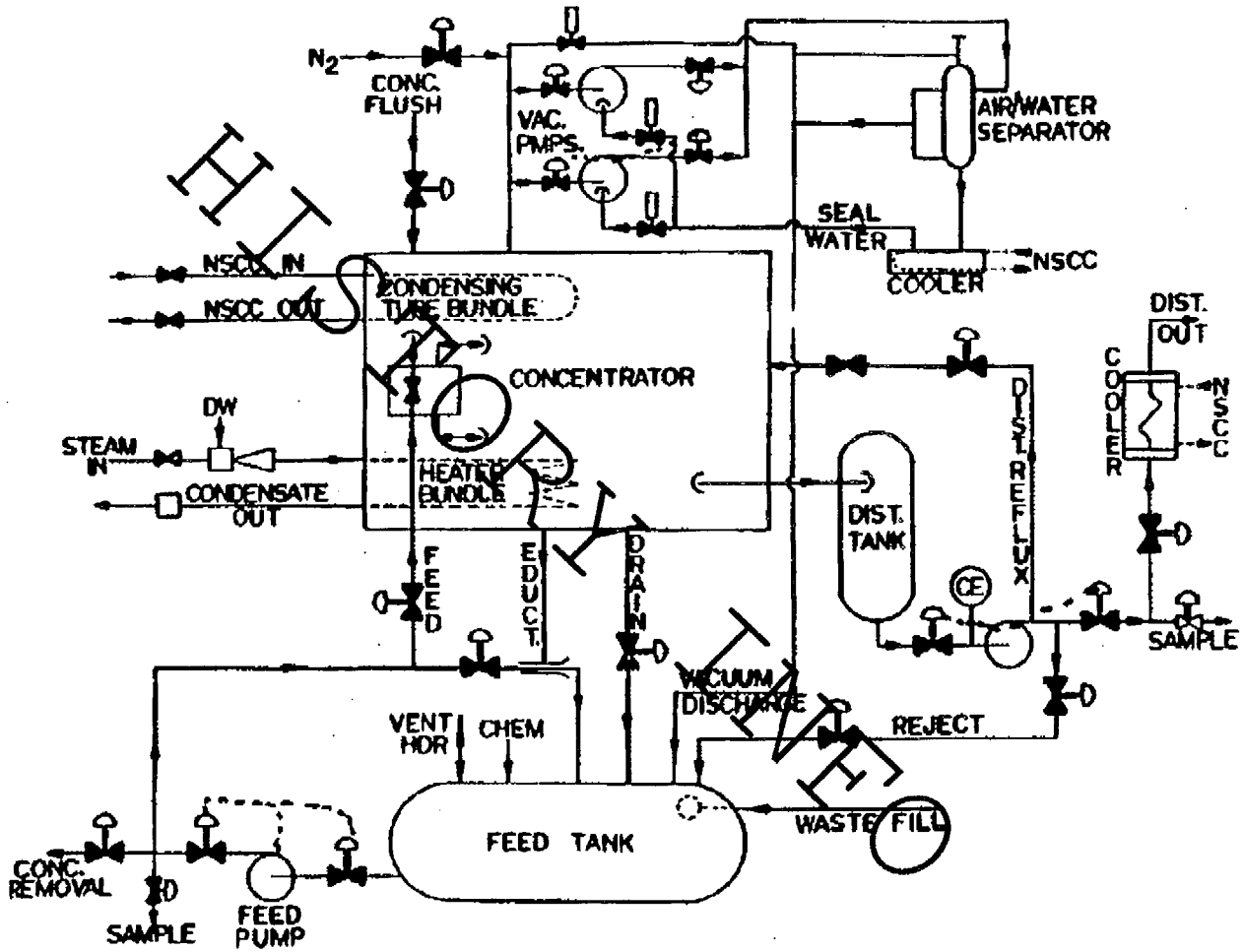

4.0 GASEOUS EFFLUENT MONITORS

4.1 TMI-1 Noble Gas Monitor Set Points

The gaseous effluent monitor set points are established for each gaseous effluent radiation monitor to assure concentrations of radionuclides in gaseous effluents do not exceed the limits set forth in ODCM Part I Control 2.2.2.1. Table 4.1 lists Gaseous Effluent Release Points and their associated parameters; Figure 4.1 provides a Gaseous Effluent Release Pathway Diagram.

The set points are established to satisfy the more restrictive set point concentration in the following two equations:

$$500 > \sum_i (c_i)(F)(K_i)(Dv) \qquad \text{(eq 4.1.1)}$$

and

$$3000 > \sum_i (c_i)(L_i + 1.1\ M_i)(Dv)(F) \qquad \text{(eq 4.1.2)}$$

where:

c_i = set point concentration based on Xe-133 equivalent, in μCi/cc

F = gaseous effluent flowrate at the monitor, in cc/sec

K_i = total body dose factor, in mrem/yr per μCi/m^3 from Table 4.3

Dv = highest sector annual average gaseous atmospheric dispersion factor (X/Q) at or beyond the unrestricted area boundary, in sec/m^3, from Table 4.4 for station vent releases and Table 4.5 for all other releases, (Condenser off gas, ESF FHB, and ground releases). Maximum values presently used are 7.17E-7 sec/m^3 at sector NNE for station vent, and 1.16E-5 sec/m^3 at sectors N and WNW for all other releases.

L_i = skin dose factor due to beta emissions from radionuclide i, in mrem/yr per μCi/m^3 from Table 4.3.

M_i = air dose factor due to gamma emissions from radionuclide i, in mrad/yr per μCi/m^3 from Table 4.3.

1.1 = mrem skin dose per mrad air dose.

500 = annual whole body dose rate limit for unrestricted areas, in mrem/yr.

3000 = annual skin dose rate limit for unrestricted areas, in mrem/yr.

The set point concentration is further reduced such that the concentration contributions from multiple release points would not combine to exceed ODCM Control limits.

The set point concentration is converted to set point scale units on each radiation monitor using appropriate calibration factors.

HISTORY INFO

This section of the ODCM is implemented by the Radiation Monitor System Set Points procedure and the procedure for Releasing Radioactive Gaseous Waste.

HISTORY INFO

4.2 TMI-1 Particulate and Radioiodine Monitor Set Points

Set points for monitors which detect radionuclides other than noble gases are also established to assure that concentrations of these radionuclides in gaseous effluents do not exceed the limits of ODCM Part I Control 2.2.2.1.

Set points are established so as to satisfy the following equations:

$$1500 > \sum_i (c_i)(F)(P_i)(Dv) \qquad \text{(eq 4.2)}$$

where:

c_i = set point concentration based on I-131 equivalent, in µCi/cc

F = gaseous effluent flow rate at the monitor, in cc/sec

P_i = pathway dose parameter, in mrem/yr per µCi/m3 for the inhalation pathway from Table 4.6. The dose factors are based on the actual individual organ and most restrictive age group (child) (NUREG-0133).

NOTE
Appendix A contains P_i calculational methodology.

1500 = annual dose rate limit to any organ from particulates and radioiodines and radionuclides (other than noble gases) with half-lives greater than eight days in mrem/yr.

Dv = highest sector annual average gaseous dispersion factor (X/Q or D/Q) at or beyond the unrestricted area boundary from Table 4.4 for releases from the station vent and Table 4.5 for all other releases. X/Q is used for the inhalation pathway. Maximum values of X/Q presently used are 7.17E-7 sec/m3 for station vent, at sector SE, and 1.16E-5 sec/m3 for all other releases, at sectors N and WNW.

The set point concentration is further reduced such that concentration contributions from multiple release points would not combine to exceed ODCM Control limits.

The set point concentration is converted to set point scale units on each radiation monitor using appropriate calibration factors.

This section of the ODCM is implemented by the Radiation Monitor Systems Set Points procedure and the procedure for Releasing Radioactive Gaseous Waste.

HISTORY INFO

4.3 TMI-2 Gaseous Radiation Monitor Set Points

TMI-2 Gaseous Radiation Monitors have their set points described in TMI Plant Procedure 1101-2.1. Figure 4.5 provides a gaseous effluent release pathway diagram. Table 4.2 provides TMI-2 Radiation Monitor Data.

These set points are set in accordance with the Controls delineated in Part II of this ODCM.

HISTORY INFO

4.4 TMI-1 Gaseous Effluent Release Points and Gaseous Radiation Monitor Data

TMI-1 has eleven (11) required effluent gaseous radiation monitors. These are RM-A4, RM-A5, RM-A15, RM-A6, RM-A7, RM-A8, RM-A9, RM-A14, ALC-RMI-18, WHP-RIT-1, and RLM-RM-1. These gaseous release points, radiation monitors, and sample points are shown in Table 4.1.

4.4.1 RM-A4/RM-A6 Fuel Handling and Auxiliary Building Exhaust

RM-A4 is the particulate, radioiodine and gaseous radiation monitor for the TMI-1 Fuel Handling Building Ventilation (see Figures 4.1 and 4.2). RM-A6 is the particulate, radioiodine, and gaseous radiation monitor for the TMI-1 Auxiliary Building Ventilation (see Figures 4.1 and 4.2). High alarms on RM-A4 or RM-A6 noble gas channels will initiate shutdown of the related building ventilation air supply system. These two radiation monitors concurrently will satisfy requirements for the Station Vent release point in place of RM-A8.

4.4.2 RM-A8 Station Ventilation Exhaust

RM-A8 is the particulate, radioiodine and gaseous radiation monitor for the TMI-1 Station Ventilation (see Figures 4.1 and 4.2). This in plant effluent radiation monitor also has an associated sampling panel with sampling lines located before the sample filters. High alarm on RM-A8 noble gas low channel will initiate shutdown of the Station Ventilation air supply systems. (The Fuel Handling and Auxiliary Building Ventilation). This radiation monitor satisfies requirements for the Station Vent release point in place of RM-A4 and RM-A6.

4.4.3 RM-A5/RM-A15 Condenser Off Gas Exhaust

RM-A5 is the gaseous radiation monitor for the TMI-1 Condenser Off Gas exhaust (see Figures 4.1 and 4.4). RM-A15 is the back up gaseous radiation monitor for the TMI-1 Condenser Off Gas exhaust (see Figures 4.1 and 4.4). High alarms on RM-A5 low channel or RM-A15 noble gas channels will initiate the MAP-5 Radioiodine Processor Station. These two radiation monitors together satisfy requirements for the Condenser Off Gas release point.

4.4.4 RM-A7 Waste Gas Decay Tank Exhaust

RM-A7 is the gaseous radiation monitor for the TMI-1 Waste Gas Decay tanks (see Figures 4.1 and 4.2). This in plant effluent radiation monitor also has an associated sampling panel. High alarm on RM-A7 noble gas channel will initiate shutdown of the Waste Gas Decay Tank release in progress. This radiation monitor satisfies requirements for batch gaseous releases to the Station Vent release point.

4.4.5 RM-A9 Reactor Building Purge Exhaust

RM-A9 is the particulate, radioiodine and gaseous radiation monitor for the TMI-1 Reactor Building Purge system (see Figures 4.1 and 4.3). This in plant effluent radiation monitor also has an associated sampling panel with sampling lines located before the sample filters. High alarm on RM-A9 noble gas low channel will initiate shutdown of the Reactor Building Purge System. This radiation monitor satisfies requirements for the Reactor Building Purge System release point.

HISTORY INFO

4.4.6 RM-A14 ESF FHB Ventilation System

RM-A14 is the gaseous radiation monitor for the TMI-1 Emergency Safeguards Features (ESF) Fuel Handling Building Exhaust system (see Figures 4.1 and 4.2). This in plant effluent radiation monitor also has an associated sampling panel with sampling lines located before the sampler filters. High alarm on RM-A14 noble gas channel will initiate shutdown of the ESF Fuel Handling Building Exhaust System. This radiation monitor satisfies requirements for the ESF Fuel Handling Building Exhaust System release point.

4.4.7 ALC-RMI-18 Chemical Cleaning Facility (CCF) Ventilation Exhaust

ALC-RMI-18 is an Victoreen particulate, radioiodine, and gaseous radiation monitor for the Chemical Cleaning building exhaust. This monitor is located in the Chemical Cleaning building on the ground floor, and has an associated sample panel. Sampling for particulate activity is performed off of the monitor.

4.4.8 WHP-RIT-1 Waste Handling and Packaging Facility (WHPF) Exhaust

WHP-RIT-1 is an Eberline AMS-3 particulate radiation monitor for the TMI WHPF. The monitor is located in the Mechanical Equipment Room in the WHPF. Sampling for particulate activity is performed off of the monitor. A high alarm will initiate shutdown of the ventilation air exhaust system.

4.4.9 RLM-RM-1 Respirator Cleaning and Laundry Maintenance (RLM) Facility

RLM-RM-1 is an Eberline AMS-3 particulate radiation monitor for the TMI RLM Facility. The monitor is located in the Mechanical Equipment Room in the RLM. Sampling for particulate activity is performed off of the monitor.

HISTORY INFO

4.5 TMI-2 Gaseous Effluent Release Points and Gaseous Radiation Monitor Data

TMI-2 has three (3) regulatory required gaseous effluent radiation monitors. These are HP-R-219, HP-R-219A and HP-R-225. These gaseous release points, radiation monitors, and sample points are shown in Table 4.2, and various gaseous effluent pathways are depicted in Figure 4.5.

4.5.1 HP-R-219 Station Ventilation Exhaust

HP-R-219 is a Victoreen particulate and gaseous radiation monitor for the TMI-2 ventilation exhaust. This in-plant effluent radiation monitor is located in the TMI-2 Auxiliary Building 328 foot elevation and has an associated sample panel.

4.5.2 HP-R-219A Station Ventilation Exhaust

HP-R-219A is a Victoreen particulate and gaseous radiation monitor for the TMI-2 ventilation exhaust. This in-plant effluent radiation monitor is located in the TMI-2 Auxiliary Building 328 foot elevation.

4.5.3 HP-R-225 Reactor Building Purge Air Exhaust Duct "A"

HP-R-225 is a Victoreen particulate and gaseous radiation monitor for the TMI-2 Reactor Building Purge Air Exhaust System. This in-plant effluent radiation monitor is located in the TMI-2 Auxiliary Building 328' elevation area.

HISTORY INFO

4.6 Control of Gaseous Effluent Releases

TMI gaseous effluent combined releases are controlled (per ODCM Part I for TMI-1 and ODCM Part II for TMI-2) by effluent sampling and radiation monitor set points. These measures assure that releases from the various vents do not combine to produce dose rates at the site boundary exceeding the most restrictive of 500 mrem per year to the total body or 3000 mrem per year to the skin, and 1500 mrem per year to the thyroid. This is done by restricting simultaneous releases and by limiting the dose rates that may be contributed by the various vents at any time. The various vent radiation monitor set points are each based on fractions of the above limits and do not exceed the above limits when summed together. These effluent radiation monitor set points are calculated using the methodology described in equations 4.1.1, or 4.1.2 and 4.2. The actual set points are then listed in TMI-1 Operations Procedure 1101-2.1.

The radioactive content of each batch of gaseous waste is determined prior to release by sampling and analyses in accordance with ODCM Part I for TMI-1 and ODCM Part II for TMI-2. The results of pre-release analyses are used with the calculational methods in Sections 4.1 and 4.2 to assure that the dose rates at the site boundary are maintained below the limits in ODCM Part I for TMI-1 and ODCM Part II for TMI-2.

Post-release analyses of samples composited from batch and continuous releases are performed in accordance with ODCM Part I for TMI-1 and ODCM Part II for TMI-2. The results of the analyses are used to assure that the dose rates at the site boundary are maintained within the limits of ODCM Part I for TMI-1 and ODCM Part II for TMI-2.

HISTORY INFO

TABLE 4.1

TMI-1 Gaseous Release Point and Gaseous Radiation Monitor Data

GASEOUS RADIATION MONITOR (DETECTOR)	LOCATION	GASEOUS RELEASE POINT	(F) FLOW RECORDER	RELEASE TERMINATION INTERLOCK (YES/NO) VALVES
RM-A4	306' Elevation Auxiliary Bldg.	Fuel Hand. Building Exhaust	FR-149	YES AH-E-10 AH-D-120 AH-D-121 AH-D-122
RM-A6	306' Elevation Auxiliary Bldg.	Auxiliary Building Exhaust	FR-150	YES AH-E-11
RM-A8	RMA-8/9 Bldg. Near BWST Exhaust	Station Vent	FR-149 & FR-150	YES WDG-V47 AH-E-10 AH-E-11 Starts MAP-5 Radioiodine Sampler
RM-A5	322' Elevation Second Floor Turbine Bldg.	Condenser Off Gas Exhaust	FR-1113	YES Starts MAP-5 Radioiodine Sampler
RM-A15	322' Elevation Second Floor Turbine Bldg.	Condenser Off Gas Exhaust	FR-1113	YES Starts MAP-5 Radioiodine Sampler
RM-A7	306' Elevation Auxiliary Bldg.	Waste Gas Decay Tanks (A,B,C)	FR-123	YES WDG-V47
RM-A9	RMA-8/9 Bldg. Near BWST	Reactor Building Purge Exhaust	FR-909/ FR-148	YES AH-V-1A/B/C/D WDG-534/535 Starts MAP-5 Radioiodine Sampler
RM-A14	331' Elevation ESF FHB Outside Chem. Addition Bldg.	ESF Fuel Handling Building Exhaust	FR-1104A/B	NO Manual Actions

HISTORY INFO

TABLE 4.1

TMI-1 Gaseous Release Point and Gaseous Radiation Monitor Data

GASEOUS RADIATION MONITOR (DETECTOR)	LOCATION	GASEOUS RELEASE POINT	RELEASE TERMINATION INTERLOCK (YES/NO) VALVES
ALC-RMI-18	Chemical Cleaning Bldg. 304' Elevation	CCB Exhaust System	NONE
WHP-RIT-1	WHPF Mechanical Equipment Room	WHPF Exhaust System	YES WHPF Ventilation Trips
RLM-RM-1	RLM-Mechanical Equipment Room	RLM Exhaust System	NONE

TABLE 4.2

TMI-2 Gaseous Release Point and Gaseous Radiation Monitor Data

GASEOUS RADIATION MONITOR (DETECTOR)	LOCATION	GASEOUS RELEASE POINT	RELEASE TERMINATION INTERLOCK (YES/NO) VALVES
HP-R-219	328' Elevation Auxiliary Building	Station Vent Exhaust	NONE
HP-R-219A	328' Elevation Auxiliary Building	Station Vent Exhaust	NONE
HP-R-225	328' Elevation Auxiliary Building	Reactor Bldg Purge Exhaust Duct "A"	NONE

HISTORY INFO

TABLE 4.3

Dose Factors for Noble Gases and Daughters*

Radionuclide	Gamma Total Body Dose Factor(a) K_i (mrem/yr per $\mu Ci/m^3$)	Beta Skin Dose Factor(b) L_i (mrem/yr per $\mu Ci/m^3$)	Gamma Air Dose Factor M_i (mrad/yr per $\mu Ci/m^3$)	Beta Air Dose Factor N_i (mrad/yr per $\mu Ci/m^3$)
Kr-83m	7.56E-02**	---	1.93E+01	2.88E+02
Kr-85m	1.17E+03	1.46E+03	1.23E+03	1.97E+03
Kr-85	1.61E+01	1.34E+03	1.72E+01	1.95E+03
Kr-87	5.92E+03	9.73E+03	6.17E+03	1.03E+04
Kr-88	1.47E+04	2.37E+03	1.52E+04	2.93E+03
Kr-89	1.66E+04	1.01E+04	1.73E+04	1.06E+04
Kr-90	1.56E+04	7.29E+03	1.63E+04	7.83E+03
Xe-131m	9.15E+01	4.76E+02	1.56E+02	1.11E+03
Xe-133m	2.51E+02	9.94E+02	3.27E+02	1.48E+03
Xe-133	2.94E+02	3.06E+02	3.53E+02	1.05E+03
Xe-135m	3.12E+03	7.11E+02	3.36E+03	7.39E+02
Xe-135	1.81E+03	1.86E+03	1.92E+03	2.46E+03
Xe-137	1.42E+03	1.22E+04	1.51E+03	1.27E+04
Xe-138	8.83E+03	4.13E+03	9.21E+03	4.75E+03
Ar-41	8.84E+03	2.69E+03	9.30E+03	3.28E+03

HISTORY INFO

* Dose factors are for immersion exposure in uniform semi-infinite cloud of noble gas radionuclides that may be detected ingaseous effluents. Dose factor values are taken from Regulatory Guide 1.109 (Rev. 1), Table B-1.

** 7.56E-02 = 7.56×10^{-2}.

(a) Total body dose factor for gamma penetration depth of 5 cm into the body.

(b) Skin dose factor at a tissue depth or tissue density thickness of 7 mg/cm^2.

TABLE 4.4

Atmospheric Dispersion Factors for Three Mile Island

• STATION VENT
• SECTOR AVERAGE X/Q (IN SEC/M^3)

DISTANCE (IN METERS)

SEASON - ANNUAL

SECTOR	610	2413	4022	5631	7240	12067	24135	40225	56315	72405
N	1.18E-07	5.32E-07	2.95E-07	1.93E-07	1.39E-07	5.52E-08	1.91E-08	5.02E-09	1.88E-09	1.09E-09
NNE	1.70E-07	7.17E-07	3.45E-07	2.00E-07	1.39E-07	5.58E-08	1.70E-08	4.77E-09	1.98E-09	9.69E-10
NE	1.12E-07	1.75E-07	3.26E-07	1.86E-07	1.21E-07	5.00E-08	1.67E-08	4.67E-09	1.85E-09	9.93E-10
ENE	1.09E-07	2.13E-07	2.67E-07	1.53E-07	1.05E-07	4.31E-08	1.42E-08	4.42E-09	1.59E-09	8.64E-10
E	2.31E-07	1.71E-07	1.52E-07	1.49E-07	1.06E-07	4.63E-08	1.52E-08	5.19E-09	2.48E-09	1.50E-09
ESE	3.50E-07	2.12E-07	2.50E-07	1.48E-07	9.48E-08	3.98E-08	1.50E-08	5.92E-09	2.92E-09	1.93E-09
SE	4.19E-07	3.79E-07	2.53E-07	1.55E-07	1.11E-07	4.82E-08	1.81E-08	6.84E-09	3.30E-09	2.22E-09
SSE	2.90E-07	3.62E-07	2.55E-07	1.49E-07	1.11E-07	5.02E-08	1.98E-08	6.97E-09	2.94E-09	1.70E-09
S	1.87E-07	6.47E-08	2.16E-07	1.30E-07	8.65E-08	4.09E-08	1.40E-08	4.96E-09	1.99E-09	1.04E-09
SSW	6.13E-08	4.16E-08	1.56E-07	1.03E-07	6.81E-08	2.72E-08	9.74E-09	3.01E-09	1.50E-09	8.23E-10
SW	5.76E-08	1.14E-07	1.70E-07	1.05E-07	6.93E-08	2.51E-08	9.34E-09	2.72E-09	1.33E-09	8.33E-10
WSW	8.52E-08	3.75E-07	2.14E-07	1.26E-07	7.74E-08	3.08E-08	1.02E-08	3.28E-09	1.39E-09	9.69E-10
W	1.15E-07	5.80E-07	2.88E-07	1.63E-07	1.18E-07	5.23E-08	1.72E-08	5.06E-09	1.98E-09	1.25E-09
WNW	1.41E-07	6.28E-07	3.30E-07	2.19E-07	1.48E-07	5.68E-08	1.95E-08	6.32E-09	2.16E-09	1.34E-09
NW	1.42E-07	5.67E-07	3.17E-07	1.93E-07	1.30E-07	5.07E-08	2.06E-08	5.90E-09	2.70E-09	1.45E-09
NNW	1.00E-07	5.77E-07	3.18E-07	1.80E-07	1.27E-07	5.20E-08	1.77E-08	4.82E-09	2.01E-09	1.22E-09

• STATION VENT
• SECTOR AVERAGE D/Q (IN M^2)

DISTANCE (IN METERS)

SEASON - ANNUAL

SECTOR	610	2413	4022	5631	7240	12067	24135	40225	56315	72405
N	2.51E-09	8.72E-10	4.84E-10	2.98E-10	2.50E-10	8.57E-11	2.51E-11	4.98E-12	1.57E-12	7.84E-13
NNE	3.89E-09	1.98E-09	9.54E-10	4.99E-10	3.38E-10	1.10E-10	2.89E-11	6.06E-12	2.10E-12	8.89E-13
NE	2.58E-09	6.70E-10	9.13E-10	4.91E-10	2.97E-10	1.04E-10	2.87E-11	6.01E-12	1.99E-12	9.23E-13
ENE	2.15E-09	5.85E-10	5.84E-10	3.06E-10	2.08E-10	8.30E-11	2.32E-11	5.41E-12	1.63E-12	7.64E-13
E	5.54E-09	1.23E-09	6.17E-10	4.59E-10	3.63E-10	1.34E-10	3.66E-11	9.44E-12	3.77E-12	1.97E-12
ESE	9.17E-09	2.05E-09	1.51E-09	8.66E-10	5.11E-10	1.82E-10	5.77E-11	1.72E-11	7.07E-12	4.07E-12
SE	1.22E-08	2.88E-09	1.84E-09	1.02E-09	6.85E-10	2.60E-10	8.30E-11	2.34E-11	9.42E-12	5.51E-12
SSE	7.50E-09	1.62E-09	1.08E-09	5.89E-10	4.49E-10	1.87E-10	6.16E-11	1.61E-11	5.67E-12	2.83E-12
S	3.86E-09	6.53E-10	6.27E-10	3.59E-10	2.32E-10	1.06E-10	3.05E-11	8.10E-12	2.73E-12	1.23E-12
SSW	1.13E-09	2.94E-10	4.19E-10	2.53E-10	1.56E-10	5.38E-11	1.68E-11	3.91E-12	1.64E-12	7.84E-13
SW	1.19E-09	3.84E-10	4.96E-10	2.80E-10	1.70E-10	5.24E-11	1.65E-11	3.62E-12	1.49E-12	8.12E-13
WSW	1.77E-09	8.31E-10	6.49E-10	3.50E-10	1.99E-10	6.73E-11	1.89E-11	4.58E-12	1.63E-12	9.90E-13
W	2.41E-09	1.29E-09	6.81E-10	3.65E-10	2.96E-10	1.12E-10	3.11E-11	6.90E-12	2.26E-12	1.25E-12
WNW	3.20E-09	1.39E-09	7.73E-10	5.91E-10	3.66E-10	1.19E-10	3.43E-11	8.36E-12	2.39E-12	1.29E-12
NW	3.25E-09	1.23E-09	7.39E-10	4.22E-10	2.77E-10	1.14E-10	7.28E-11	7.61E-12	2.92E-12	1.36E-12
NNW	1.98E-09	9.88E-10	5.71E-10	3.05E-10	2.23E-10	8.21E-11	2.41E-11	4.93E-12	1.72E-12	9.03E-13

DATA FROM 1/1/78 THROUGH 12/31/86 USED IN CALCULATIONS

HISTORY ONLY

TABLE 4.5

Atmospheric Dispersion Factors for Three Mile Island

• GROUND RELEASE
• SECTOR AVERAGE X/Q (IN SEC/M^3)

DISTANCE (IN METERS)

SEASON - ANNUAL

SECTOR	610	2413	4022	5631	7240	12067	24135	40225	56315	72405
N	1.16E-05	1.13E-06	5.94E-07	3.80E-07	2.38E-07	9.74E-08	3.45E-08	9.28E-09	3.52E-09	2.05E-09
NNE	1.08E-05	1.10E-06	5.66E-07	3.41E-07	2.38E-07	9.55E-08	3.11E-08	8.94E-09	3.74E-09	1.84E-09
NE	7.02E-06	9.81E-07	5.42E-07	3.17E-07	2.10E-07	9.01E-08	3.10E-08	8.87E-09	3.54E-09	1.91E-09
ENE	7.14E-06	9.64E-07	4.92E-07	2.85E-07	1.97E-07	7.82E-08	2.64E-08	8.38E-09	3.04E-09	1.66E-09
E	8.49E-06	1.09E-06	5.48E-07	2.91E-07	1.87E-07	8.40E-08	2.82E-08	9.85E-09	4.75E-09	2.87E-09
ESE	6.91E-06	9.02E-07	4.49E-07	2.57E-07	1.67E-07	7.20E-08	2.77E-08	1.12E-08	5.94E-09	3.68E-09
SE	6.70E-06	9.06E-07	4.53E-07	2.81E-07	2.03E-07	8.94E-08	3.33E-08	1.28E-08	6.19E-09	4.18E-09
SSE	7.26E-06	9.25E-07	4.91E-07	2.87E-07	2.08E-07	9.18E-08	3.72E-08	1.32E-08	5.62E-09	3.26E-09
S	8.70E-06	9.08E-07	3.99E-07	2.41E-07	1.61E-07	7.31E-08	2.57E-08	9.23E-09	3.74E-09	1.95E-09
SSW	6.05E-06	7.01E-07	2.75E-07	1.86E-07	1.24E-07	5.06E-08	1.82E-08	5.71E-09	2.87E-09	1.58E-09
SW	5.94E-06	5.71E-07	2.86E-07	1.81E-07	1.22E-07	4.50E-08	1.79E-08	5.12E-09	2.53E-09	1.59E-09
WSW	8.00E-06	7.02E-07	3.60E-07	2.15E-07	1.34E-07	5.50E-08	1.87E-08	6.12E-09	2.62E-09	1.83E-09
W	1.02E-05	1.07E-06	5.30E-07	3.02E-07	2.05E-07	9.31E-08	3.15E-08	9.48E-09	3.74E-09	2.38E-09
WNW	1.16E-05	1.13E-06	5.98E-07	3.67E-07	2.53E-07	1.10E-07	3.56E-08	1.18E-08	4.07E-09	2.54E-09
NW	1.13E-05	1.06E-06	5.70E-07	3.53E-07	2.40E-07	1.02E-07	3.82E-08	1.11E-08	5.14E-09	2.78E-09
NNW	1.08E-05	1.04E-06	5.72E-07	3.27E-07	2.22E-07	9.06E-08	3.20E-08	8.89E-09	3.75E-09	2.29E-09

• GROUND RELEASE
• SECTOR AVERAGE D/Q (IN M^{-2})

DISTANCE (IN METERS)

SEASON - ANNUAL

SECTOR	610	2413	4022	5631	7240	12067	24135	40225	56315	72405
N	2.30E-08	1.88E-09	8.93E-10	4.82E-10	2.70E-10	8.96E-11	2.53E-11	4.98E-12	1.57E-12	7.84E-13
NNE	2.66E-08	2.25E-09	1.06E-09	5.42E-10	3.38E-10	1.10E-10	2.89E-11	6.06E-12	2.10E-12	8.89E-13
NE	1.75E-08	2.00E-09	1.01E-09	5.04E-10	2.98E-10	1.04E-10	2.88E-11	6.01E-12	1.99E-12	9.23E-13
ENE	1.68E-08	1.85E-09	8.95E-10	4.28E-10	2.65E-10	8.57E-11	2.33E-11	5.41E-12	1.63E-12	7.64E-13
E	2.88E-08	2.99E-09	1.39E-09	6.34E-10	3.67E-10	1.35E-10	3.68E-11	9.42E-12	3.77E-12	1.97E-12
ESE	3.59E-08	3.80E-09	1.77E-09	8.79E-10	5.15E-10	1.83E-10	5.78E-11	1.71E-11	7.06E-12	4.06E-12
SE	4.12E-08	4.55E-09	2.13E-09	1.15E-09	7.50E-10	2.72E-10	8.31E-11	2.34E-11	9.42E-12	5.50E-12
SSE	3.12E-08	3.23E-09	1.59E-09	8.00E-10	5.20E-10	1.88E-10	6.18E-11	1.61E-11	5.66E-12	2.83E-12
S	2.65E-08	2.21E-09	9.07E-10	4.75E-10	2.86E-10	1.07E-10	3.06E-11	8.10E-12	2.73E-12	1.23E-12
SSW	1.45E-08	1.30E-09	4.80E-10	2.82E-10	1.70E-10	5.71E-11	1.69E-11	3.91E-12	1.64E-12	7.84E-13
SW	1.42E-08	1.10E-09	5.15E-10	2.82E-10	1.71E-10	5.24E-11	1.65E-11	3.62E-12	1.49E-12	8.12E-13
WSW	2.01E-08	1.41E-09	6.82E-10	3.54E-10	2.00E-10	6.76E-11	1.89E-11	4.58E-12	1.63E-12	9.90E-13
W	2.55E-08	2.16E-09	1.00E-09	4.91E-10	3.01E-10	1.12E-10	3.11E-11	6.90E-12	2.27E-12	1.25E-12
WNW	2.88E-08	2.30E-09	1.13E-09	5.93E-10	3.67E-10	1.19E-10	3.43E-11	8.36E-12	2.39E-12	1.29E-12
NW	2.78E-08	2.15E-09	1.06E-09	5.58E-10	3.41E-10	1.19E-10	3.57E-11	7.61E-12	2.92E-12	1.36E-12
NNW	2.17E-08	1.75E-09	8.75E-10	4.24E-10	2.57E-10	8.55E-11	2.42E-11	4.93E-12	1.72E-12	9.03E-13

DATA FROM 1/1/78 THROUGH 12/31/86 USED IN CALCULATIONS

HISTORY ONLY

TABLE 4.6

Dose Parameters for Radioiodines and Radioactive Particulate in Gaseous Effluents*

NUCLIDE	CRITICAL ORGAN	ORGAN FACTOR	Pi***	NUCLIDE	CRITICAL ORGAN	ORGAN FACTOR	Pi***
H-3**	TOTAL BODY	3.04E-07	1.12E+03	RU-103	LUNG	1.79E-04	6.62E+05
C-14	BONE	9.70E-06	3.59E+04	RU-105	GI-LLI	2.69E-05	9.95E+04
NA-24	TOTAL BODY	4.35E-06	1.61E+04	RU-106	LUNG	3.87E-03	1.43E+07
P-32	BONE	7.04E-04	2.60E+06	AG-110M	LUNG	1.48E-03	5.48E+06
CR-51	LUNG	4.59E-06	1.70E+04	TE-125M	LUNG	1.29E-04	4.77E+05
MN-54	LUNG	4.26E-04	1.58E+06	SB-125	LUNG	6.27E-04	2.32E+06
MN-56	GI-LLI	3.33E-05	1.23E+05	TE-127M	LUNG	4.00E-04	1.48E+06
FE-55	LUNG	3.00E-05	1.11E+05	TE-127	GI-LLI	1.52E-05	5.62E+04
FE-59	LUNG	3.43E-04	1.27E+06	TE-129M	LUNG	4.76E-04	1.76E+06
CO-58	LUNG	2.99E-04	1.11E+06	TE-129	GI-LLI	6.89E-06	2.55E+04
CO-60	LUNG	1.91E-03	7.07E+06	TE-131M	GI-LLI	8.32E-05	3.08E+05
NI-63	BONE	2.22E-04	8.21E+05	TE-131	LUNG	5.55E-07	2.05E+03
NI-65	GI-LLI	2.27E-05	8.40E+04	TE-132	LUNG	1.02E-04	3.77E+05
CU-64	GI-LLI	9.92E-06	3.67E+04	I-130	THYROID	4.99E-04	1.85E+06
ZN-65	LUNG	2.69E-04	9.95E+05	I-131	THYROID	4.39E-03	1.62E+07
ZN-69	GI-LLI	2.75E-06	1.02E+04	I-132	THYROID	5.23E-05	1.94E+05
BR-83	TOTAL BODY	1.28E-07	4.74E+02	I-133	THYROID	1.04E-03	3.85E+06
BR-84	TOTAL BODY	1.48E-07	5.48E+02	I-134	THYROID	1.37E-05	5.07E+04
BR-85	TOTAL BODY	6.84E-09	2.53E+01	I-135	THYROID	2.14E-04	7.92E+05
RB-86	LIVER	5.36E-05	1.98E+05	CS-134	LIVER	2.74E-04	1.01E+06
RB-88	LIVER	1.52E-07	5.62E+02	CS-136	LIVER	4.62E-05	1.71E+05
RB-89	LIVER	9.33E-08	3.45E+02	CS-137	BONE	2.45E-04	9.07E+05
SR-89	LUNG	5.89E-04	2.16E+06	CS-138	LIVER	2.27E-07	8.40E+02
SR-90	BONE	2.73E-02	1.01E+08	BA-139	GI-LLI	1.56E-05	5.77E+04
SR-91	GI-LLI	4.70E-05	1.74E+05	BA-140	LUNG	4.71E-04	1.74E+06
SR-92	GI-LLI	6.55E-05	2.42E+05	BA-141	LUNG	7.89E-07	2.92E+03
Y-90	GI-LLI	7.24E-05	2.68E+05	BA-142	LUNG	4.44E-07	1.64E+03
Y-91M	LUNG	7.60E-07	2.81E+03	LA-140	GI-LLI	6.10E-05	2.26E+05
Y-91	LUNG	7.10E-04	2.63E+06	LA-142	GI-LLI	2.05E-05	7.59E+04
Y-92	GI-LLI	6.46E-05	2.39E+05	CE-141	LUNG	1.47E-04	5.44E+05
Y-93	GI-LLI	1.05E-04	3.89E+05	CE-143	GI-LLI	3.44E-05	1.27E+05
ZR-95	LUNG	6.03E-04	2.23E+06	CE-144	LUNG	3.23E-03	1.20E+07
ZR-97	GI-LLI	9.49E-05	3.51E+05	PR-143	LUNG	1.17E-04	4.33E+05
NB-95	LUNG	1.66E-04	6.14E+05	PR-144	LUNG	4.23E-07	1.57E+03
MO-99	LUNG	3.66E-05	1.35E+05	ND-147	LUNG	8.87E-05	3.28E+05
TC-99M	GI-LLI	1.30E-06	4.81E+03	W-187	GI-LLI	2.46E-05	9.10E+04
TC-101	LUNG	1.58E-07	5.85E+02	NP-239	GI-LLI	1.73E-05	6.40E+04

* The listed dose parameters are for radionuclides, other than noble gases that may be detected in gaseous effluents. Pi factors include all nonatmospheric pathway transport parameters, the receptor's usage of pathway media, and are based on the most restrictive age group (child) critical organ. Additional dose parameters for nuclides not included in this Table may be calculated using the methodology described in NUREG-0133.

** Tritium dose factors include an increase of 50% to account for the additional amount of this nuclide absorbed through the skin.

*** mrem/year per $\mu Ci/m^3$.

HISTORY ONLY

FIGURE 4.1

TMI-1 Gaseous Effluent Pathways

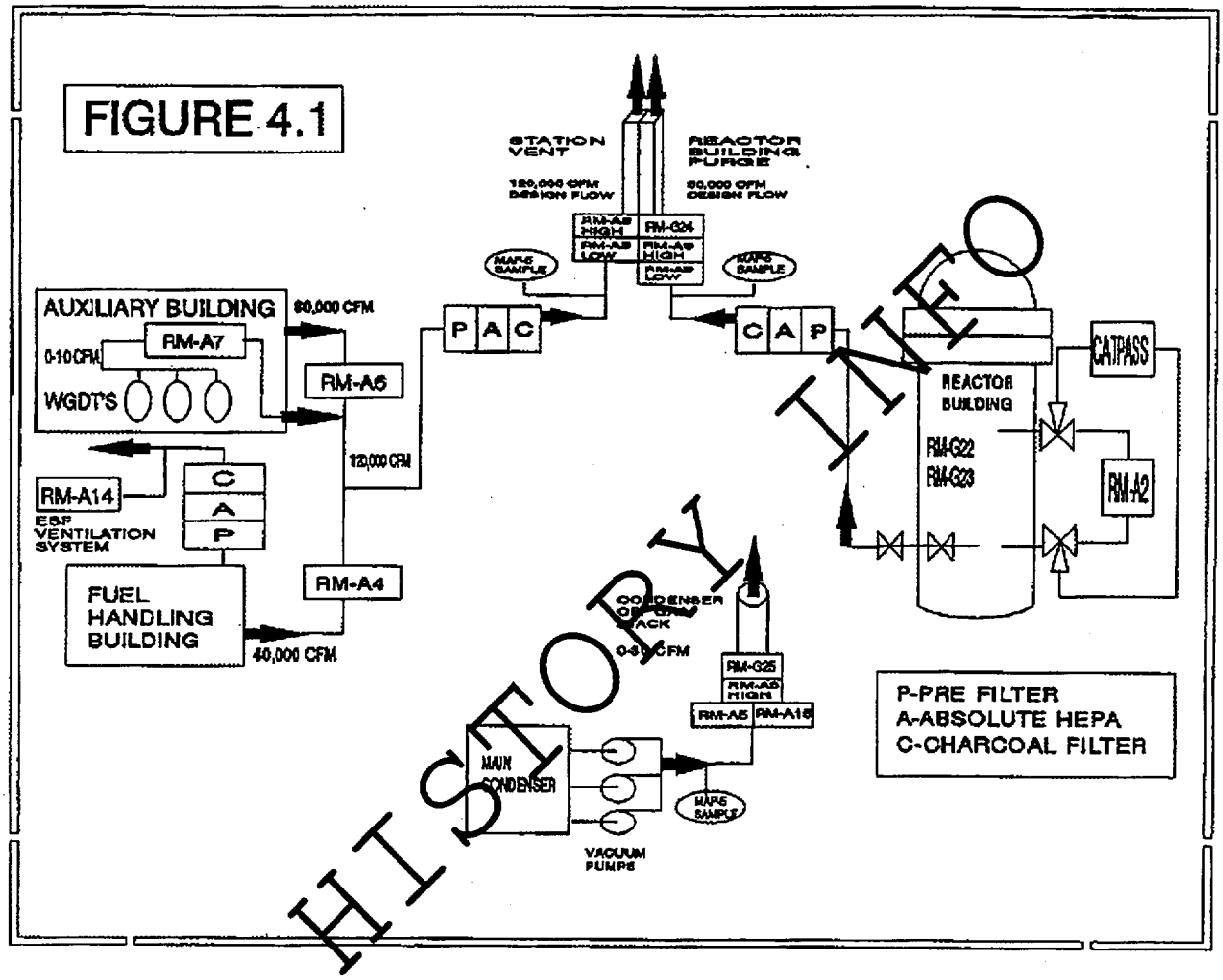

FIGURE 4.2

TMI-1 Auxiliary and Fuel Handling Buildings Effluent Pathways

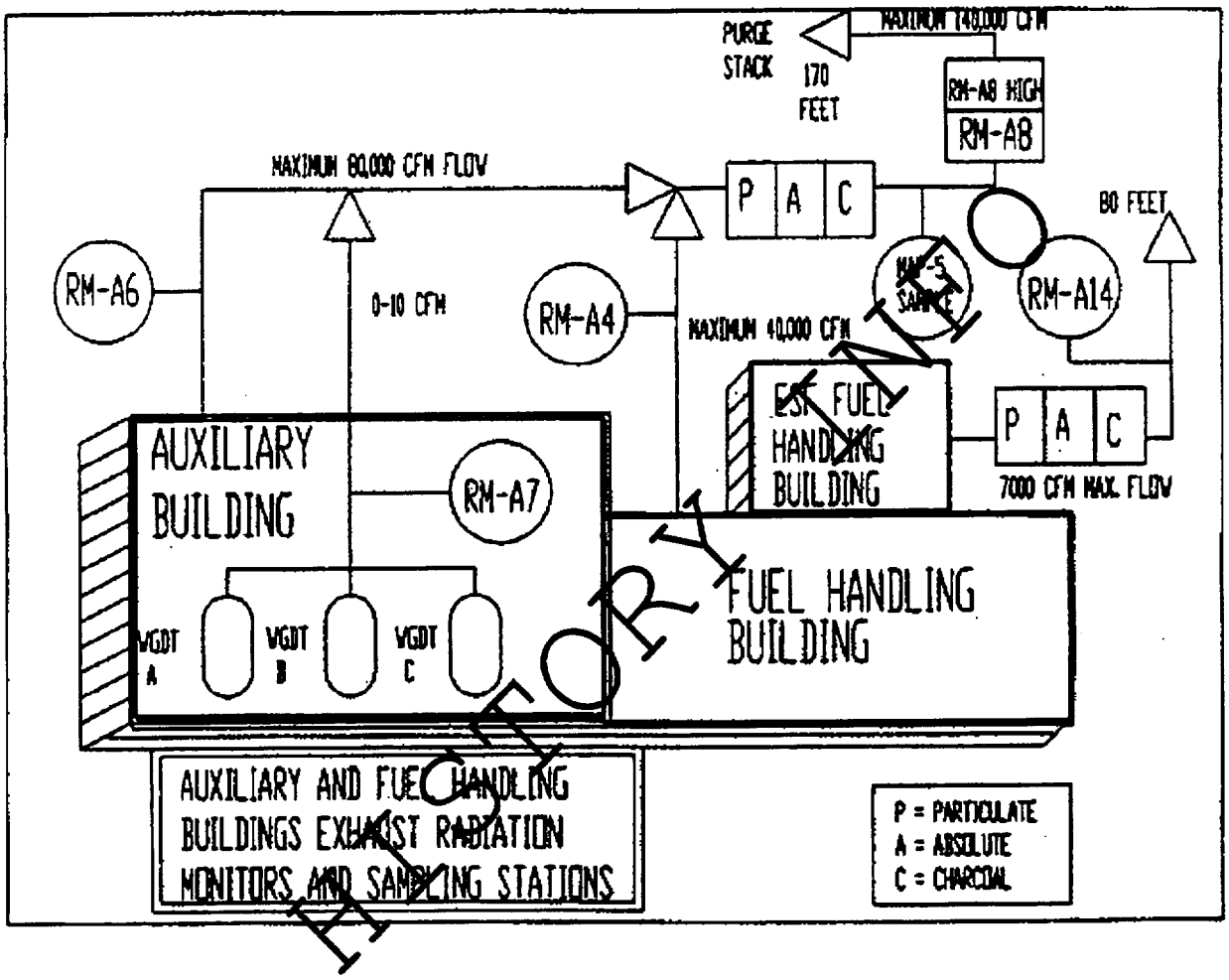

HISTORY

FIGURE 4.3

TMI-1 Reactor Building Effluent Pathway

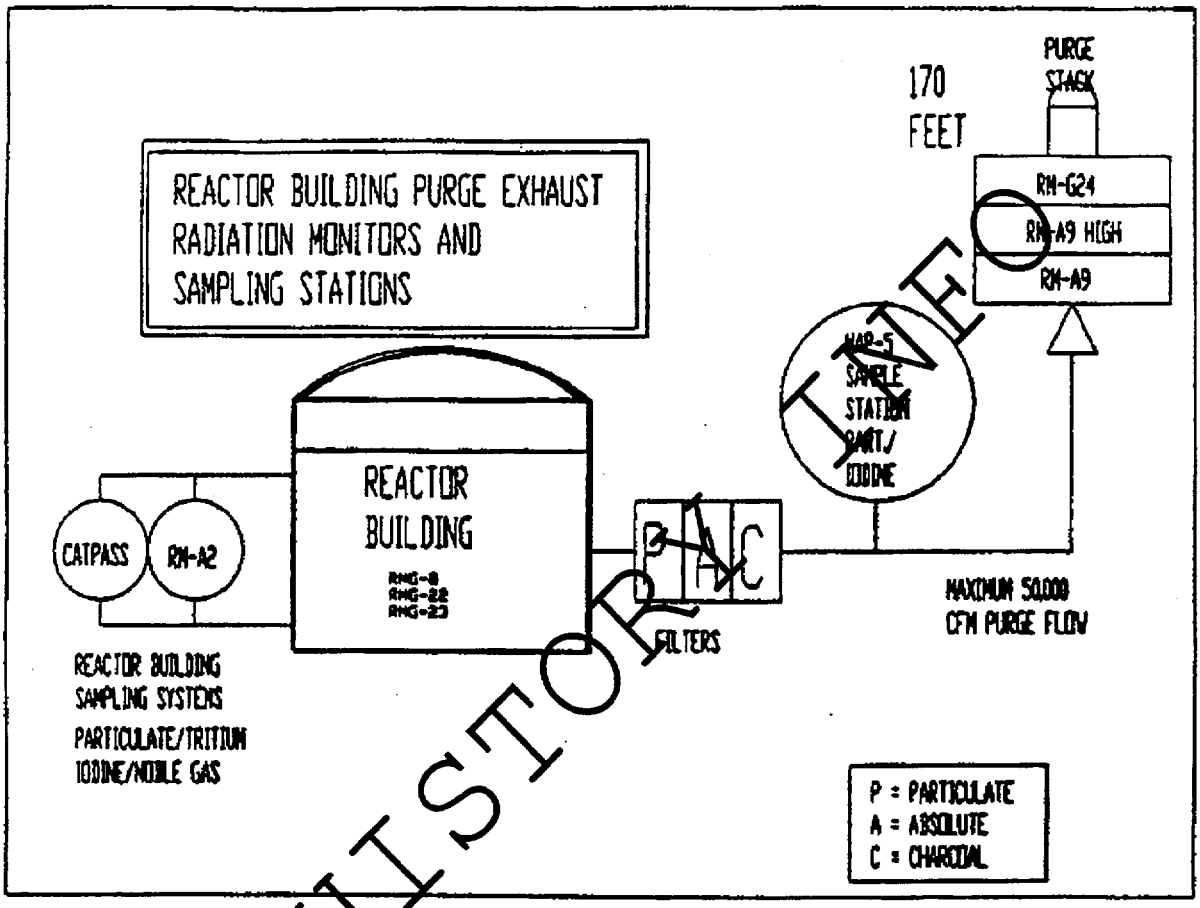

HISTORICAL

FIGURE 4.4

TMI-1 Condenser Offgas Effluent Pathway

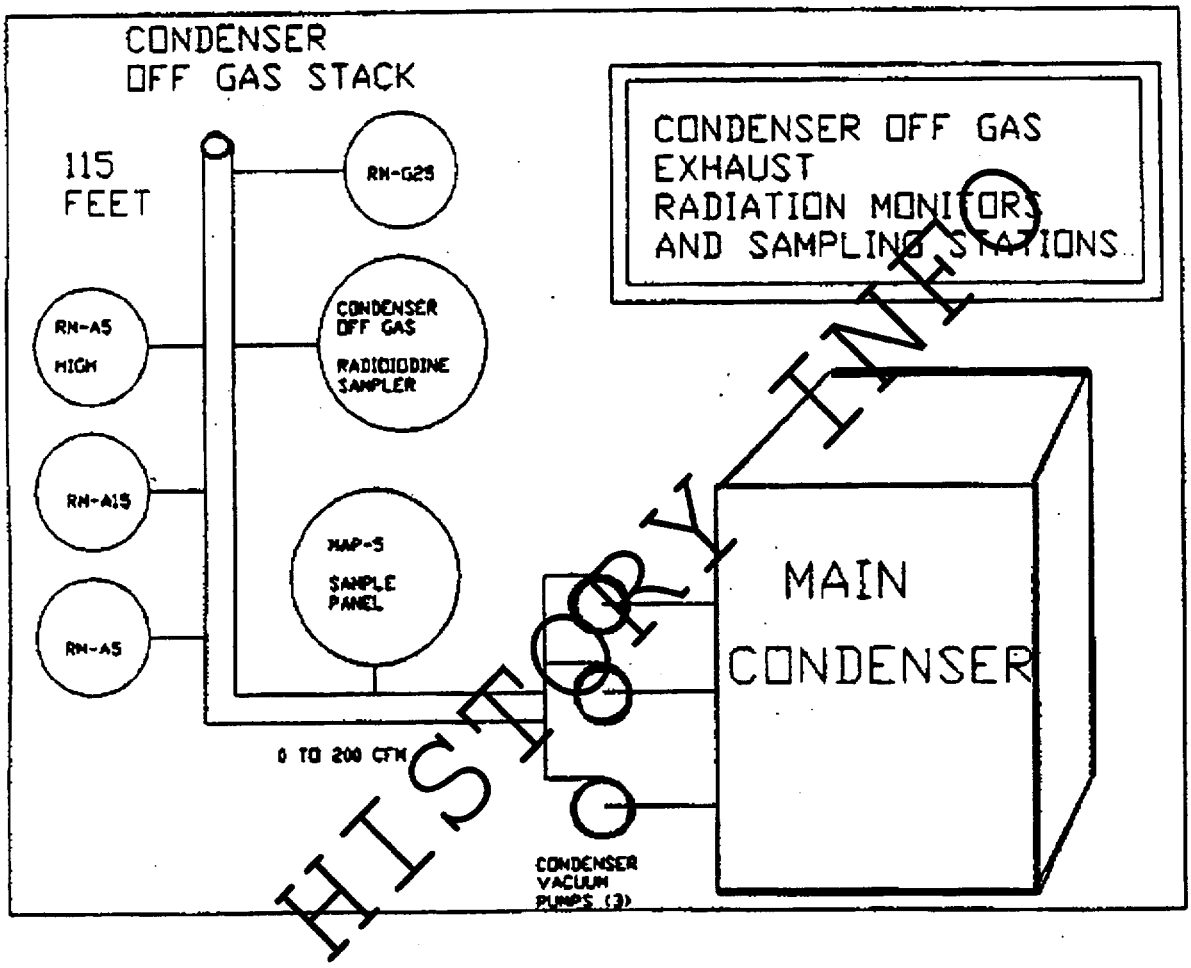

HISTORY ONLY

FIGURE 4.5
TMI-2 Gaseous Effluent Filtration System/Pathways

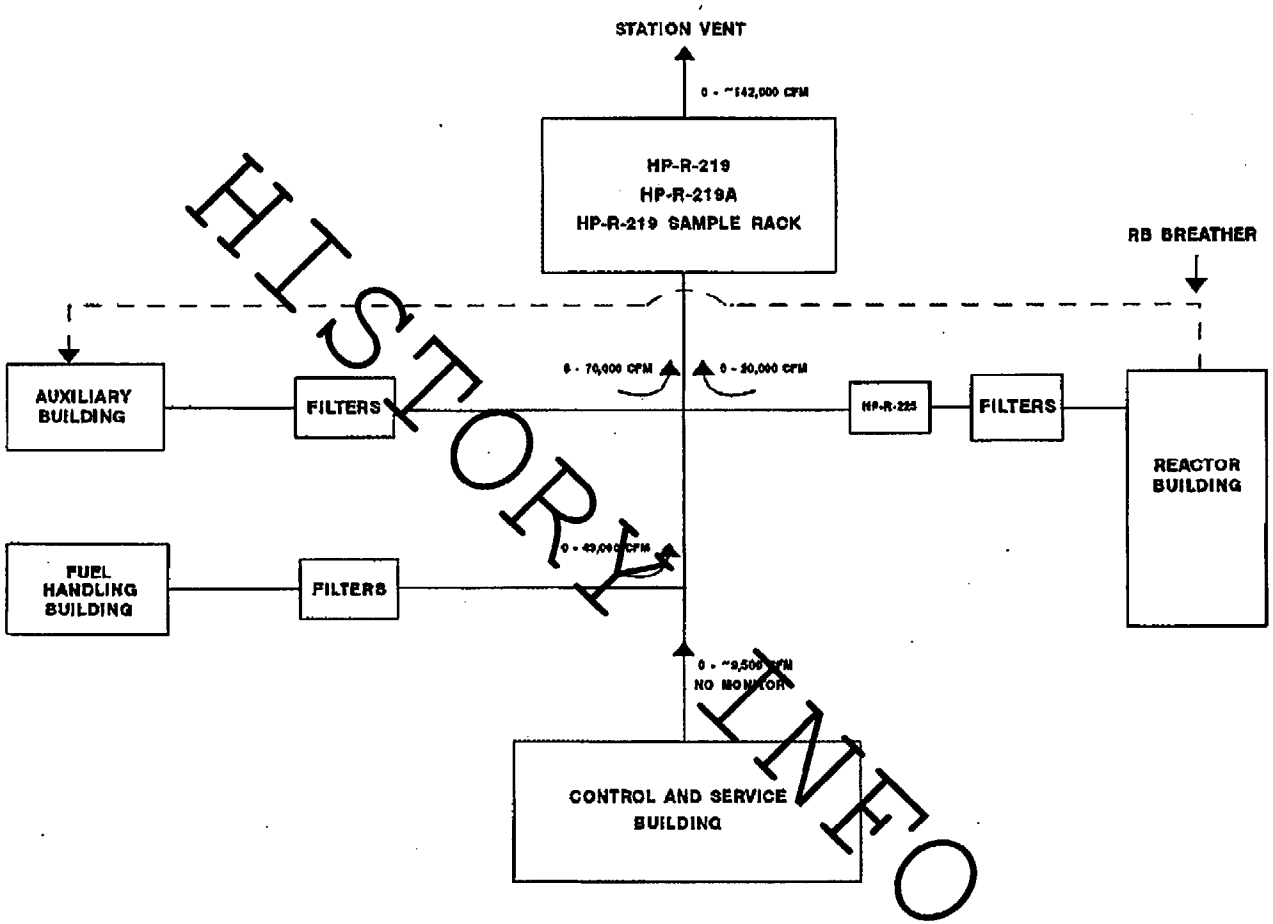

UNIT 2 EXHAUST AIR FLOW AND RMS SCHEMATIC

5.0 GASEOUS EFFLUENT DOSE ASSESSMENT

5.1 Gaseous Effluents - Instantaneous Release Limits

5.1.1 Noble Gases

For noble gases, the following equations apply for total body and skin dose rate at the unrestricted area boundary:

5.1.1.1 Total Body

$$\text{Dose Rate}_{tb} = \sum_{i} (K_i) \times (Dv) \times (Q_i) \qquad \text{(eq 5.1.1.1)}$$

where:

Dose Ratet b = instantaneous total body dose rate limit, at the site boundary, in mrem/yr.

K_i = total body dose factor due to gamma emissions for each identified noble gas radionuclide, in mrem/yr per $\mu Ci/m^3$ from Table 4.3.

Dv = highest sector annual average gaseous dispersion factor (X/Q) at or beyond the unrestricted area boundary, in sec/m^3, from Table 4.4 for station vent releases and Table 4.5 for all other releases (Condenser Off Gas, ESF FHB, and ground releases). Maximum values presently in use are 7.17E-7 sec/m^3 at sector NNE for station vent, and 1.16E-5 sec/m^3 for all other releases at sectors N and WNW.

Q_i = Release rate of radionuclide, i, in $\mu Ci/sec$ as determined by sampling and analysis. Calculated using the concentration of noble gas radionuclide, i, in $\mu Ci/cc$, times the release pathway flow rate, in cc/second.

HISTORY INFO

5.1.1.2 Skin

$$\text{Dose Rate}_{sk} = \sum_i (L_i + 1.1\ M_i) \times (Dv) \times (Q_i) \qquad \text{(eq 5.1.1.2)}$$

where:

Dose Rate_{sk} = instantaneous mrem/year skin dose rate limit, at the site boundary, in mrem/yr.

L_i = skin dose factor due to beta emissions for each identified noble gas radionuclide, in mrem/yr per $\mu Ci/m^3$ from Table 4.3.

M_i = air dose factor due to gamma emissions for each identified noble gas radionuclide, in mrad/yr per $\mu Ci/m^3$ from Table 4.3.

1.1 = mrem skin dose per mrad air dose. Converts air dose to skin dose.

Q_i = release rate of radionuclide, i, in µCi/sec, as determined by sampling and analysis. Calculated using the concentration of noble gas radionuclide, i, in µCi/cc, times the release pathway flow rate, in cc/second.

Dv = highest sector annual average gaseous dispersion factor (X/Q) at or beyond the unrestricted area boundary, in sec/m^3, from Table 4.4 for station vent releases; and Table 4.5 for all other releases (Condenser Off Gas, ESF FHB, and ground releases). Maximum values presently in use are 7.17E-7 sec/m^3 at sector NNE for station vent, and 1.16E-5 sec/m^3 for all other releases, at sectors N and WNW.

HISTORY INFO

5.1.2 Iodine-131, Iodine-133, Tritium and Radionuclides in Particulate Form, with Half-Lives Greater than 8 Days

For I-131, I-133, Tritium and Radionuclides in Particulate Form, with half-lives greater than 8 days, the following equation applies:

$$\textbf{Dose Rate}_{IP} = \sum_i (P_i)(D_v)(Q_i) \qquad \text{(eq 5.1.2)}$$

where:

Dose Rate_{IP} = mrem/year organ dose rate.

P_i = dose parameter for I-131, I-133, Tritium and Radionuclides in Particulate Form, with half-lives greater than 8 days, for the inhalation pathway, in mrem/yr per $\mu Ci/m^3$, from Table 4.6. The dose factors are based on the critical individual organ and most restrictive age group (child).

Dv = highest sector annual average gaseous dispersion factor (X/Q or D/Q) at or beyond the unrestricted area boundary, in sec/m^3, from Table 4.4 for the station vent releases and Table 4.5 for all other releases. X/Q is used for the inhalation pathway. Maximum values of X/Q presently used are 7.17E-7 sec/m^3 for station vent, at sector NNE, and 1.16E-5 sec/m^3 for all other releases, at sectors N and WNW.

Q_i = release rate of each radionuclide, i, in $\mu Ci/sec$. Calculated using the concentration of each radionuclide, i, in $\mu Ci/cc$, times the release pathway flow rate, in cc/second.

HISTORY INFO

5.2 Gaseous Effluents - 10 CFR 50 Appendix I

5.2.1 Noble Gases

The air dose in an unrestricted area due to noble gases released in gaseous effluents from the site is determined using the following expressions:

$$\text{Dose } \Gamma = (3.17E\text{-}8) \times \sum_i (M_i) \times (Dv) \times (Qi) \qquad \text{(eq 5.2.1)}$$

and

$$\text{Dose } \beta = (3.17E\text{-}8) \times \sum_i (N_i) \times (Dv) \times (Qi) \qquad \text{(eq 5.2.2)}$$

where:

Dose Γ = mrad gamma air dose due to gamma emissions from noble gas radionuclides.

Dose β = mrad beta air dose due to beta emissions from noble gas radionuclides.

M_i = air dose factor due to gamma emissions for each identified noble gas radionuclide, in mrad/yr per $\mu Ci/m^3$, from Table 4.3.

N_i = air dose factor due to beta emissions for each identified noble gas radionuclide, in mrad/yr per $\mu Ci/m^3$, from Table 4.3.

Dv = highest sector annual average gaseous dispersion factor, X/Q, at or beyond the unrestricted area boundary, in sec/m^3. Values may be read or interpolated from Table 4.4 for releases from the station vent and Table 4.5 for all other releases. Maximum values of X/Q presently used are 7.17E-7 sec/m^3 for station vent at sector NNE, and 1.16E-5 sec/m^3 for all other releases at sectors N or WNW.

Q_i = release of noble gas radionuclide, i, in μCi, over the specified time period, (μCi/second * seconds).

3.17E-8 = inverse of the number of seconds in a year.

NOTE

If the methodology in this section is used in determining dose to an individual, rather than air dose due to noble gases, substitute Ki, from Table 4.3, for Mi, and (Li + 1.1 Mi) for Ni.

HISTORY INFO

5.2.2 Iodine-131, Iodine-133, Tritium and Radionuclides in Particulate Form, with Half-Lives Greater than 8 Days

The dose to an individual from I-131, I-133, Tritium and Radionuclides in Particulate Form with half-lives greater than 8 days in gaseous effluents released from the site to an unrestricted area is determined by solving the following expression:

$$\text{Dose}_o = \sum_i (3.17E\text{-}8) \times \sum_i (R_i)(Dv)(Q_i) \qquad \text{(eq 5.2.2)}$$

where:

Dose_o = dose to all real pathways, p, to organ, o, of an individual in age group, a, from I-131, I-133, Tritium and Radionuclides in Particulate Form, with half-lives greater than 8 days, in mrem, during any desired time period.

R_i = the dose factor for each identified radionuclide, i, pathway, p, age group, a, and organ, o, in mrem/yr per μCi/m³ for the inhalation pathway and m² - mrem/yr per μCi/sec for other pathways, from Tables 5.2 to 5.7.

NOTE

Since there is minimal or no elemental iodine released from the condenser off-gas air ejector (see NUREG-0017) all iodine R_i values for all pathways, except the inhalation pathway, are considered to be zero when performing dose calculations for releases from the condenser off-gas air ejector. Only calculate the dose due to the inhalation pathway for condenser off-gas air ejector iodines.

NOTE

Tritium, H-3, dose factor is mrem/year per μCi/m³ for all pathways.

Dv = highest sector annual average gaseous dispersion factor (X/Q) at or beyond the unrestricted area boundary, in sec/m³, for the inhalation pathway, and D/Q, in m², for other pathways. Table 4.4 is used to derive the values for station vent releases and Table 4.5 is used to derive the values for all other releases. The values used to calculate site boundary and critical receptor doses are as follows:

Station Vent Releases - Boundary			
Inhalation X/Q	7.17 E-7		
Meat D/Q	1.22 E-8	Ground D/Q	1.22 E-8
Cow/Milk/Infant D/Q	1.22 E-8	Vegetation D/Q	1.22 E-8
Station Vent Releases - Critical Receptor			
Inhalation X/Q	7.2 E-7		
Meat D/Q	4.6 E-9	Ground D/Q	7.8 E-9
Cow/Milk/Infant D/Q	3.1 E-9	Vegetation D/Q	8.9 E-9

HISTORY INFO

Ground or Other Rleases - Boundary			
Inhalation X/Q	1.16 E-5		
Meat D/Q	4.12 E-8	Ground D/Q	4.12 E-8
Cow/Milk/Infant D/Q	4.12 E-8	Vegetation D/Q	4.12 E-8
Ground or Other Rleases - Critical Receptor			
Inhalation X/Q	1.2 E-5		
Meat D/Q	9.2 E-9	Ground D/Q	3.0 E-8
Cow/Milk/Infant D/Q	6.3 E-9	Vegetation D/Q	2.6 E-8

Dv(H-3) = In the case of H-3 only the X/Q's above are used for all pathways.

Q_i = release of I-131, I-133, Tritium and Radionuclides, i, in Particulate Form with half-lives greater than 8 days, in μCi, cumulative over the specified time period (μCi/second * seconds).

3.17E-8 = inverse of the number of seconds in a year.

HISTORY INFO

5.3 Gaseous Radioactive System Dose Calculations Once per Month

ODCM Part I Control 2.2.2.4 and TMI-2 PDMS Tech Spec Section 6.7.4.a.6 requires that appropriate subsystem of the Gaseous Radwaste Treatment System shall be used to reduce the radioactive materials in gaseous waste prior to their discharge. When the monthly projected doses due to the gaseous effluent releases from the site would exceed:

0.2 mrad to air from gamma radiation; or
0.4 mrad to air from beta radiation; or
0.3 mrem to any organ.

The following calculational method is provided for performing this dose projection.

At least once per month the gamma air dose, beta air dose and the maximum organ dose for the quarter-to-date will be divided by the number of days into the quarter and multiplied by 31. Also, this dose projection shall include the estimated dose due to any anticipated unusual release during the period for which the projection is made. If these projected doses exceed any of the values listed above, appropriate portions of the TMI-1 Gaseous Waste Treatment System, as defined in Section 6.0, or appropriate portions of the TMI-2 Gaseous Effluent Filtration System as shown on Figure 4.5, shall be used to reduce radioactivity levels prior to release.

At the discretion of Radiological Engineering, time periods other than the current quarter-to-date may be used to project doses if the dose per day in the current quarter-to-date is not believed to be representative of the dose per day projected for the next month.

HISTORY INFO

5.4 Alternative Dose Calculational Methodologies for Gaseous Effluents

As an alternative to the methods described above, the models in/or based upon, those presented in Regulatory Guide 1.109 (Rev. 1) may be used to make a comprehensive dose assessment. Default parameter values from Regulatory Guide 1.109 (Rev. 1) and/or actual site specific data can be used where applicable.

The onsite, on-line computerized system for tracking gaseous effluent dose uses annual average gaseous dispersion factors. As an alternative dose calculational methodology. GPU Nuclear calculates doses using an advanced class "A" dispersion model called SEEDS (simplified environmental effluent dosimetry system).

This model incorporates the guidelines and methodology set forth in USNRC Regulatory Guide 1.109, and uses actual hourly meteorological information matched to the time of releases to more accurately assess the dispersion of effluents in the atmosphere. Combining this assessment of dispersion with TMINS effluent data for each unit, postulated maximum hypothetical doses to the public are calculated.

HISTORY INFO

TABLE 5.2.1

Pathway Dose Factors, Ri

AGE GROUP: INFANT PATHWAY: INHALATION

NUCLIDE	ORGAN DOSE FACTORS; mrem/year per µCi/m³						
	BONE	LIVER	T.BODY	THYROID	KIDNEY	LUNG	GI-LLI
H-3	0.00E+00	6.47E+02	6.47E+02	6.47E+02	6.47E+02	6.47E+02	6.47E+02
C-14	2.65E+04	5.31E+03	5.31E+03	5.31E+03	5.31E+03	5.31E+03	5.31E+03
CR-51	0.00E+00	0.00E+00	8.95E+01	5.75E+01	1.32E+01	1.28E+04	3.57E+02
MN-54	0.00E+00	2.53E+04	4.98E+03	0.00E+00	4.98E+03	1.00E+06	7.06E+03
FE-55	1.97E+04	1.17E+04	3.33E+03	0.00E+00	0.00E+00	8.69E+04	1.09E+03
FE-59	1.36E+04	2.35E+04	9.48E+03	0.00E+00	0.00E+00	1.02E+06	2.48E+04
CO-58	0.00E+00	1.22E+03	1.82E+03	0.00E+00	0.00E+00	7.77E+05	1.11E+04
CO-60	0.00E+00	8.02E+03	1.18E+04	0.00E+00	0.00E+00	4.51E+06	3.19E+04
NI-63	3.39E+05	2.04E+04	1.16E+04	0.00E+00	0.00E+00	2.09E+05	2.42E+03
ZN-65	1.93E+04	6.26E+04	3.11E+04	0.00E+00	3.25E+04	6.47E+05	5.14E+04
RB-86	0.00E+00	1.90E+05	8.82E+04	0.00E+00	0.00E+00	0.00E+00	3.04E+03
SR-89	3.98E+05	0.00E+00	1.14E+04	0.00E+00	0.00E+00	2.03E+06	6.40E+04
SR-90	4.09E+07	0.00E+00	2.59E+06	0.00E+00	0.00E+00	1.12E+07	1.31E+05
Y-91	5.88E+05	0.00E+00	1.57E+04	0.00E+00	0.00E+00	2.45E+06	7.03E+04
ZR-95	1.15E+05	2.79E+04	2.03E+04	0.00E+00	3.11E+04	1.75E+06	2.17E+04
NB-95	1.57E+04	6.43E+03	3.78E+03	0.00E+00	4.72E+03	4.79E+05	1.27E+04
RU-103	2.02E+03	0.00E+00	6.79E+02	0.00E+00	4.24E+03	5.52E+05	1.61E+04
RU-106	8.68E+04	0.00E+00	1.09E+04	0.00E+00	1.07E+05	1.16E+07	1.64E+05
AG-110M	9.98E+03	7.22E+03	5.00E+03	0.00E+00	1.09E+04	3.67E+06	3.30E+04
TE-125M	4.76E+03	1.99E+03	6.58E+02	1.62E+03	0.00E+00	4.47E+05	1.29E+04
TE-127M	1.67E+04	6.00E+03	2.07E+03	4.87E+03	3.75E+04	1.31E+06	2.73E+04
TE-129M	1.41E+04	6.09E+03	2.23E+03	5.47E+03	3.18E+04	1.68E+06	6.90E+04
I-131	3.79E+04	1.44E+04	1.96E+04	1.48E+07	5.18E+04	0.00E+00	1.06E+03
I-133	1.32E+04	1.32E+04	5.60E+03	3.56E+06	2.24E+04	0.00E+00	2.16E+03
CS-134	3.96E+05	7.03E+05	7.45E+04	0.00E+00	1.90E+05	7.97E+04	1.33E+03
CS-136	4.83E+04	1.35E+05	5.29E+04	0.00E+00	5.64E+04	1.18E+04	1.43E+03
CS-137	5.49E+05	6.12E+05	4.55E+04	0.00E+00	1.72E+05	7.13E+04	1.33E+03
BA-140	5.60E+04	5.60E+01	2.90E+03	0.00E+00	1.34E+01	1.60E+06	3.84E+04
CE-141	2.77E+04	1.67E+04	1.99E+03	0.00E+00	5.25E+03	5.17E+05	2.16E+04
CE-144	3.19E+06	1.21E+06	1.76E+05	0.00E+00	5.38E+05	9.84E+06	1.48E+05
PR-143	1.40E+04	5.24E+03	6.99E+02	0.00E+00	1.97E+03	4.33E+05	3.72E+04
ND-147	7.94E+03	8.13E+03	5.00E+02	0.00E+00	3.15E+03	3.22E+05	3.12E+04

HISTORY INFO

TABLE 5.2.2

Pathway Dose Factors, Ri

AGE GROUP: CHILD PATHWAY: INHALATION

NUCLIDE	ORGAN DOSE FACTORS; mrem/year per µCi/m³						
	BONE	LIVER	T.BODY	THYROID	KIDNEY	LUNG	GI-LLI
H-3	0.00E+00	1.12E+03	1.12E+03	1.12E+03	1.12E+03	1.12E+03	1.12E+03
C-14	3.59E+04	6.73E+03	6.73E+03	6.73E+03	6.73E+03	6.73E+03	6.73E+03
CR-51	0.00E+00	0.00E+00	1.54E+02	8.55E+01	2.43E+01	1.70E+04	1.08E+03
MN-54	0.00E+00	4.29E+04	9.51E+03	0.00E+00	1.00E+04	1.58E+06	2.29E+04
FE-55	4.74E+04	2.52E+04	7.77E+03	0.00E+00	0.00E+00	1.11E+05	2.87E+03
FE-59	2.07E+04	3.34E+04	1.67E+04	0.00E+00	0.00E+00	1.27E+06	7.07E+04
CO-58	0.00E+00	1.77E+03	3.16E+03	0.00E+00	0.00E+00	1.11E+06	3.44E+04
CO-60	0.00E+00	1.31E+04	2.26E+04	0.00E+00	0.00E+00	7.07E+06	9.62E+04
NI-63	8.21E+05	4.63E+04	2.80E+04	0.00E+00	0.00E+00	2.75E+05	6.33E+03
ZN-65	4.26E+04	1.13E+05	7.03E+04	0.00E+00	7.14E+04	9.95E+05	1.63E+04
RB-86	0.00E+00	1.98E+05	1.14E+05	0.00E+00	0.00E+00	0.00E+00	7.99E+03
SR-89	5.99E+05	0.00E+00	1.72E+04	0.00E+00	0.00E+00	2.16E+06	1.67E+05
SR-90	1.01E+08	0.00E+00	6.44E+06	0.00E+00	0.00E+00	1.48E+07	3.43E+05
Y-91	9.14E+05	0.00E+00	2.44E+04	0.00E+00	0.00E+00	2.63E+06	1.84E+05
ZR-95	1.90E+05	4.18E+04	3.70E+04	0.00E+00	5.96E+04	2.23E+06	6.11E+04
NB-95	2.35E+04	9.18E+03	6.55E+03	0.00E+00	8.62E+03	6.14E+05	3.70E+04
RU-103	2.79E+03	0.00E+00	1.07E+06	0.00E+00	7.03E+03	6.62E+05	4.48E+04
RU-106	1.36E+05	0.00E+00	1.69E+04	0.00E+00	1.84E+05	1.43E+07	4.29E+05
AG-110M	1.69E+04	1.14E+04	9.14E+03	0.00E+00	2.12E+04	5.48E+06	1.00E+05
TE-125M	6.73E+03	2.33E+03	9.14E+02	1.92E+03	0.00E+00	4.77E+05	3.38E+04
TE-127M	2.49E+04	8.55E+03	3.02E+03	6.07E+03	6.36E+04	1.48E+06	7.14E+04
TE-129M	1.92E+04	6.85E+03	3.04E+03	6.33E+03	5.03E+04	1.76E+06	1.82E+05
I-131	4.81E+04	4.81E+04	2.73E+04	1.62E+07	7.88E+04	0.00E+00	2.84E+03
I-133	1.66E+04	2.03E+04	7.70E+03	3.85E+06	3.38E+04	0.00E+00	5.48E+03
CS-134	6.51E+05	1.01E+06	2.25E+05	0.00E+00	3.30E+05	1.21E+05	3.85E+03
CS-136	6.51E+04	1.71E+05	1.16E+05	0.00E+00	9.55E+04	1.45E+04	4.18E+03
CS-137	9.07E+05	8.25E+05	1.28E+05	0.00E+00	2.82E+05	1.04E+05	3.62E+03
BA-140	7.40E+04	6.48E+01	4.33E+03	0.00E+00	2.11E+01	1.74E+06	1.02E+05
CE-141	3.92E+04	1.95E+04	2.90E+03	0.00E+00	8.55E+03	5.44E+05	5.66E+04
CE-144	6.77E+06	2.12E+06	3.61E+05	0.00E+00	1.17E+06	1.20E+07	3.89E+05
PR-143	1.85E+04	5.55E+03	9.14E+02	0.00E+00	3.00E+03	4.33E+05	9.73E+04
ND-147	1.08E+04	8.73E+03	6.81E+02	0.00E+00	4.81E+03	3.28E+05	8.21E+04

HISTORY INFO

TABLE 5.2.3

Pathway Dose Factors, Ri

AGE GROUP: TEEN PATHWAY: INHALATION

NUCLIDE	ORGAN DOSE FACTORS; mrem/year per µCi/m³						
	BONE	LIVER	T.BODY	THYROID	KIDNEY	LUNG	GI-LLI
H-3	0.00E+00	1.27E+03	1.27E+03	1.27E+03	1.27E+03	1.27E+03	1.27E+03
C-14	2.60E+04	4.87E+03	4.87E+03	4.87E+03	4.87E+03	4.87E+03	4.87E+03
CR-51	0.00E+00	0.00E+00	1.35E+02	7.50E+01	3.07E+01	2.10E+04	3.00E+03
MN-54	0.00E+00	5.11E+04	8.40E+03	0.00E+00	1.27E+04	1.98E+06	6.68E+04
FE-55	3.34E+04	2.38E+04	5.54E+03	0.00E+00	0.00E+00	1.24E+05	5.39E+03
FE-59	1.59E+04	3.70E+04	1.43E+04	0.00E+00	0.00E+00	1.52E+06	1.78E+05
CO-58	0.00E+00	2.07E+03	2.78E+03	0.00E+00	0.00E+00	1.84E+06	9.52E+04
CO-60	0.00E+00	1.51E+04	1.98E+04	0.00E+00	0.00E+00	8.72E+06	2.59E+05
NI-63	5.80E+05	4.34E+04	1.98E+04	0.00E+00	0.00E+00	5.07E+05	1.42E+04
ZN-65	3.86E+04	1.34E+05	6.24E+04	0.00E+00	8.64E+04	1.24E+06	4.66E+04
RB-86	0.00E+00	1.90E+05	8.40E+04	0.00E+00	0.00E+00	0.00E+00	1.77E+04
SR-89	4.34E+05	0.00E+00	1.25E+04	0.00E+00	0.00E+00	2.42E+06	3.71E+05
SR-90	1.08E+08	0.00E+00	6.68E+06	0.00E+00	0.00E+00	1.65E+07	7.65E+05
Y-91	6.61E+05	0.00E+00	1.77E+04	0.00E+00	0.00E+00	2.94E+06	4.09E+05
ZR-95	1.46E+05	4.58E+04	3.15E+04	0.00E+00	6.74E+04	2.69E+06	1.49E+05
NB-95	1.86E+04	1.03E+04	5.66E+03	0.00E+00	1.00E+04	7.51E+05	9.68E+04
RU-103	2.10E+03	0.00E+00	8.96E+02	0.00E+00	7.43E+03	7.83E+05	1.09E+05
RU-106	9.84E+04	0.00E+00	1.21E+04	0.00E+00	1.90E+05	1.61E+07	9.60E+05
AG-110M	1.38E+04	1.31E+04	7.99E+03	0.00E+00	2.50E+04	6.75E+06	2.73E+05
TE-125M	4.88E+03	2.24E+03	6.67E+02	1.40E+03	0.00E+00	5.36E+05	7.50E+04
TE-127M	1.80E+04	8.16E+03	2.18E+03	4.38E+03	6.54E+04	1.66E+06	1.59E+05
TE-129M	1.39E+04	6.58E+03	2.25E+03	4.58E+03	5.19E+04	1.98E+06	4.05E+05
I-131	3.54E+04	4.91E+04	2.64E+04	1.46E+07	8.40E+04	0.00E+00	6.49E+03
I-133	1.22E+04	2.05E+04	6.22E+03	2.92E+06	3.59E+04	0.00E+00	1.03E+04
CS-134	5.02E+05	1.13E+06	5.49E+05	0.00E+00	3.75E+05	1.46E+05	9.76E+03
CS-136	5.15E+04	1.94E+05	1.37E+05	0.00E+00	1.10E+05	1.78E+04	1.09E+04
CS-137	6.70E+05	8.48E+05	3.11E+05	0.00E+00	3.04E+05	1.21E+05	8.48E+03
BA-140	5.47E+04	6.70E+01	3.52E+03	0.00E+00	2.28E+01	2.03E+06	2.29E+05
CE-141	2.84E+04	1.90E+04	2.17E+03	0.00E+00	8.88E+03	6.14E+05	1.26E+05
CE-144	4.89E+06	2.02E+06	2.62E+05	0.00E+00	1.21E+06	1.34E+07	8.64E+05
PR-143	1.34E+04	5.31E+03	6.62E+02	0.00E+00	3.09E+03	4.83E+05	2.14E+05
ND-147	7.86E+03	8.56E+03	5.13E+02	0.00E+00	5.02E+03	3.72E+05	1.82E+05

HISTORY INFO

TABLE 5.2.4

Pathway Dose Factors, Ri

AGE GROUP: ADULT PATHWAY: INHALATION

NUCLIDE	ORGAN DOSE FACTORS; mrem/year per µCi/m³						
	BONE	LIVER	T.BODY	THYROID	KIDNEY	LUNG	GI-LLI
H-3	0.00E+00	1.26E+03	1.26E+03	1.26E+03	1.26E+03	1.26E+03	1.26E+03
C-14	1.82E+04	3.41E+03	3.41E+03	3.41E+03	3.41E+03	3.41E+03	3.41E+03
CR-51	0.00E+00	0.00E+00	1.00E+02	5.95E+01	2.28E+01	1.44E+04	3.32E+03
MN-54	0.00E+00	3.96E+04	6.30E+03	0.00E+00	9.84E+03	1.40E+06	7.74E+04
FE-55	2.46E+04	1.70E+04	3.94E+03	0.00E+00	0.00E+00	7.21E+04	6.03E+03
FE-59	1.18E+04	2.78E+04	1.06E+04	0.00E+00	0.00E+00	1.02E+06	1.88E+05
CO-58	0.00E+00	1.58E+03	2.07E+03	0.00E+00	0.00E+00	9.28E+05	1.06E+05
CO-60	0.00E+00	1.15E+04	1.48E+04	0.00E+00	0.00E+00	5.97E+06	2.85E+05
NI-63	4.32E+05	3.14E+04	1.45E+04	0.00E+00	0.00E+00	7.78E+05	1.34E+04
ZN-65	3.24E+04	1.03E+05	4.66E+04	0.00E+00	6.90E+04	8.64E+05	5.34E+04
RB-86	0.00E+00	1.35E+05	5.90E+04	0.00E+00	0.00E+00	0.00E+00	1.66E+04
SR-89	3.04E+05	0.00E+00	8.72E+03	0.00E+00	0.00E+00	1.40E+06	3.50E+05
SR-90	9.92E+07	0.00E+00	6.10E+06	0.00E+00	0.00E+00	9.60E+06	7.22E+05
Y-91	4.62E+05	0.00E+00	1.24E+04	0.00E+00	0.00E+00	1.70E+06	3.85E+05
ZR-95	1.07E+05	3.44E+04	2.33E+04	0.00E+00	5.42E+04	1.77E+06	1.50E+05
NB-95	1.41E+04	7.82E+03	4.21E+03	0.00E+00	7.74E+03	5.05E+05	1.04E+05
RU-103	1.53E+03	0.00E+00	6.58E+02	0.00E+00	5.83E+03	5.05E+05	1.10E+05
RU-106	6.91E+04	0.00E+00	8.72E+03	0.00E+00	1.34E+05	9.36E+06	9.12E+05
AG-110M	1.08E+04	1.00E+04	5.94E+03	0.00E+00	1.97E+04	4.63E+06	3.02E+05
TE-125M	3.42E+03	1.58E+03	4.67E+02	1.05E+03	1.24E+04	3.14E+05	7.06E+04
TE-127M	1.26E+04	5.77E+03	1.57E+03	3.29E+03	4.58E+04	9.60E+05	1.50E+05
TE-129M	9.76E+03	4.67E+03	1.58E+03	3.44E+03	3.66E+04	1.16E+06	3.83E+05
I-131	2.52E+04	3.68E+04	2.05E+04	1.19E+07	6.13E+04	0.00E+00	6.28E+03
I-133	8.64E+03	1.48E+04	4.52E+03	2.15E+06	2.58E+04	0.00E+00	8.88E+03
CS-134	3.73E+05	8.48E+05	7.28E+05	0.00E+00	2.87E+05	9.76E+04	1.04E+04
CS-136	3.90E+04	1.46E+05	1.10E+05	0.00E+00	8.56E+04	1.20E+04	1.17E+04
CS-137	4.78E+05	6.21E+05	4.28E+05	0.00E+00	2.22E+05	7.52E+04	8.40E+03
BA-140	3.90E+04	4.90E+01	2.57E+03	0.00E+00	1.67E+01	1.27E+06	2.18E+05
CE-141	1.99E+04	1.35E+04	1.53E+03	0.00E+00	6.26E+03	3.62E+05	1.20E+05
CE-144	3.43E+06	1.43E+06	1.84E+05	0.00E+00	8.48E+05	7.78E+06	8.16E+05
PR-143	9.36E+03	3.75E+03	4.64E+02	0.00E+00	2.16E+03	2.81E+05	2.00E+05
ND-147	5.27E+03	6.10E+03	3.65E+02	0.00E+00	3.56E+03	2.21E+05	1.73E+05

HISTORY ONLY

TABLE 5.3.1

Pathway Dose Factors, Ri

AGE GROUP: ALL PATHWAY: GROUND PLANE

NUCLIDE	ORGAN DOSE FACTORS*	
	T.BODY	SKIN
H-3	0.00E+00	0.00E+00
C-14	0.00E+00	0.00E+00
CR-51	4.65E+06	5.50E+06
MN-54	1.39E+09	1.62E+09
FE-55	0.00E+00	0.00E+00
FE-59	2.73E+08	3.21E+08
CO-58	3.79E+08	4.44E+08
CO-60	2.15E+10	2.53E+10
NI-63	0.00E+00	0.00E+00
ZN-65	7.47E+08	8.59E+08
RB-86	8.97E+06	1.03E+07
SR-89	2.16E+04	2.51E+04
SR-90	0.00E+00	0.00E+00
Y-91	1.07E+06	1.21E+06
ZR-95	2.45E+08	2.84E+08
NB-95	1.37E+08	1.61E+08
RU-103	1.08E+08	1.26E+08
RU-106	4.32E+08	5.06E+08
AG-110M	3.44E+09	4.01E+09
TE-125M	1.55E+06	2.13E+06
TE-127M	9.17E+04	1.08E+05
TE-129M	1.98E+07	2.31E+07
I-131	1.72E+07	2.09E+07
I-133	2.45E+06	2.98E+06
CS-134	6.86E+09	8.00E+09
CS-136	1.51E+08	1.71E+08
CS-137	1.03E+10	1.20E+10
BA-140	2.06E+07	2.36E+07
CE-141	1.37E+07	1.54E+07
CE-144	6.96E+07	8.05E+07
PR-143	0.00E+00	0.00E+00
ND-147	8.39E+06	1.01E+07

* m^2 - mrem/year per µCi/sec.

HISTORY INFO

TABLE 5.4.1

Pathway Dose Factors, Ri

AGE GROUP: INFANT PATHWAY: GRASS-COW-MILK

NUCLIDE	ORGAN DOSE FACTORS; m^2 - mrem/year per µCi/sec						
	BONE	LIVER	T.BODY	THYROID	KIDNEY	LUNG	GI-LLI
H-3	0.00E+00	2.38E+03	2.38E+03	2.38E+03	2.38E+03	2.38E+03	2.38E+03
C-14	2.34E+09	5.00E+08	5.00E+08	5.00E+08	5.00E+08	5.00E+08	5.00E+08
CR-51	0.00E+00	0.00E+00	1.61E+05	1.05E+05	2.30E+04	2.05E+05	4.70E+06
MN-54	0.00E+00	3.91E+07	8.85E+06	0.00E+00	8.65E+06	0.00E+00	1.43E+07
FE-55	1.35E+08	8.74E+07	2.34E+07	0.00E+00	0.00E+00	4.27E+07	7.11E+07
FE-59	2.25E+08	3.93E+08	1.55E+08	0.00E+00	0.00E+00	1.16E+08	1.88E+08
CO-58	0.00E+00	2.43E+07	6.06E+07	0.00E+00	0.00E+00	0.00E+00	6.05E+07
CO-60	0.00E+00	8.83E+07	2.08E+08	0.00E+00	0.00E+00	0.00E+00	2.10E+08
NI-63	3.50E+10	2.16E+09	1.21E+09	0.00E+00	0.00E+00	0.00E+00	1.08E+08
ZN-65	5.56E+09	1.91E+10	8.79E+09	0.00E+00	9.24E+09	0.00E+00	1.61E+10
RB-86	0.00E+00	2.23E+10	1.10E+10	0.00E+00	0.00E+00	0.00E+00	5.70E+08
SR-89	1.26E+10	0.00E+00	3.62E+08	0.00E+00	0.00E+00	0.00E+00	2.59E+08
SR-90	1.22E+11	0.00E+00	3.10E+10	0.00E+00	0.00E+00	0.00E+00	1.52E+09
Y-91	7.34E+04	0.00E+00	1.95E+03	0.00E+00	0.00E+00	0.00E+00	5.26E+06
ZR-95	6.81E+03	1.66E+03	1.18E+03	0.00E+00	1.79E+03	0.00E+00	8.27E+05
NB-95	5.94E+05	2.45E+05	1.41E+05	0.00E+00	1.75E+05	0.00E+00	2.07E+08
RU-103	8.68E+03	0.00E+00	2.90E+03	0.00E+00	1.81E+04	0.00E+00	1.06E+05
RU-106	1.91E+05	0.00E+00	2.36E+04	0.00E+00	2.25E+05	0.00E+00	1.45E+06
AG-110M	3.86E+08	2.82E+08	1.87E+08	0.00E+00	4.03E+08	0.00E+00	1.46E+10
TE-125M	1.51E+08	5.05E+07	2.04E+07	5.08E+07	0.00E+00	0.00E+00	7.19E+07
TE-127M	4.22E+08	1.40E+08	5.10E+07	1.22E+08	1.04E+09	0.00E+00	1.70E+08
TE-129M	5.58E+08	1.91E+08	8.59E+07	2.14E+08	1.39E+09	0.00E+00	3.33E+08
I-131	2.72E+09	3.81E+09	1.41E+09	1.05E+12	3.75E+09	0.00E+00	1.15E+08
I-133	3.63E+07	5.29E+07	1.55E+07	9.62E+09	6.22E+07	0.00E+00	8.96E+06
CS-134	3.65E+10	6.81E+10	6.88E+09	0.00E+00	1.75E+10	7.19E+09	1.85E+08
CS-136	1.98E+09	5.83E+09	2.18E+09	0.00E+00	2.32E+09	4.75E+08	8.85E+07
CS-137	5.15E+10	6.03E+10	4.27E+09	0.00E+00	1.62E+10	6.55E+09	1.89E+08
BA-140	2.42E+08	2.42E+05	1.25E+07	0.00E+00	5.75E+04	1.49E+05	5.94E+07
CE-141	4.34E+04	2.65E+04	3.12E+03	0.00E+00	8.17E+03	0.00E+00	1.37E+07
CE-144	2.33E+06	9.53E+05	1.30E+05	0.00E+00	3.85E+05	0.00E+00	1.34E+08
PR-143	1.49E+03	5.56E+02	7.37E+01	0.00E+00	2.07E+02	0.00E+00	7.84E+05
ND-147	8.83E+02	9.07E+02	5.55E+01	0.00E+00	3.50E+02	0.00E+00	5.75E+05

HISTORY INFO

TABLE 5.4.2

Pathway Dose Factors, RI

AGE GROUP: CHILD PATHWAY: GRASS-COW-MILK

NUCLIDE	ORGAN DOSE FACTORS; m^2 - mrem/year per µCi/sec						
	BONE	LIVER	T.BODY	THYROID	KIDNEY	LUNG	GI-LLI
H-3	0.00E+00	1.57E+03	1.57E+03	1.57E+03	1.57E+03	1.57E+03	1.57E+03
C-14	1.20E+09	2.39E+08	2.39E+08	2.39E+08	2.39E+08	2.39E+08	2.39E+08
CR-51	0.00E+00	0.00E+00	1.02E+05	5.65E+04	1.54E+04	1.03E+05	5.40E+06
MN-54	0.00E+00	2.10E+07	5.59E+06	0.00E+00	5.89E+06	0.00E+00	1.76E+07
FE-55	1.12E+08	5.94E+07	1.84E+07	0.00E+00	0.00E+00	3.36E+07	1.10E+07
FE-59	1.20E+08	1.95E+08	9.70E+07	0.00E+00	0.00E+00	5.05E+07	2.03E+08
CO-58	0.00E+00	1.21E+07	3.72E+07	0.00E+00	0.00E+00	0.00E+00	7.08E+07
CO-60	0.00E+00	4.32E+07	1.27E+08	0.00E+00	0.00E+00	0.00E+00	2.39E+08
NI-63	2.97E+10	1.59E+09	1.01E+09	0.00E+00	0.00E+00	0.00E+00	1.07E+08
ZN-65	4.14E+09	1.10E+10	6.86E+09	0.00E+00	6.95E+09	0.00E+00	1.94E+09
RB-86	0.00E+00	8.78E+09	5.40E+09	0.00E+00	0.00E+00	0.00E+00	5.65E+08
SR-89	6.63E+09	0.00E+00	1.89E+08	0.00E+00	0.00E+00	0.00E+00	2.57E+08
SR-90	1.12E+11	0.00E+00	2.84E+10	0.00E+00	0.00E+00	0.00E+00	1.51E+09
Y-91	3.91E+04	0.00E+00	1.05E+03	0.00E+00	0.00E+00	0.00E+00	5.21E+06
ZR-95	3.84E+03	8.43E+02	7.51E+02	0.00E+00	1.21E+03	0.00E+00	8.80E+05
NB-95	3.18E+05	1.24E+05	8.86E+04	0.00E+00	1.16E+05	0.00E+00	2.29E+08
RU-103	4.29E+03	0.00E+00	1.65E+03	0.00E+00	1.08E+04	0.00E+00	1.11E+05
RU-106	9.25E+04	0.00E+00	1.15E+04	0.00E+00	1.25E+05	0.00E+00	1.44E+06
AG-110M	2.09E+08	1.41E+08	1.13E+08	0.00E+00	2.63E+08	0.00E+00	1.68E+10
TE-125M	7.39E+07	2.00E+07	9.85E+06	2.07E+07	0.00E+00	0.00E+00	7.13E+07
TE-127M	2.08E+08	5.61E+07	2.47E+07	4.98E+07	5.94E+08	0.00E+00	1.69E+08
TE-129M	2.72E+08	7.59E+07	4.22E+07	8.76E+07	7.98E+08	0.00E+00	3.31E+08
I-131	1.31E+08	1.81E+09	7.46E+08	4.34E+11	2.16E+09	0.00E+00	1.17E+08
I-133	1.72E+07	2.13E+07	8.05E+06	3.95E+09	3.55E+07	0.00E+00	8.58E+06
CS-134	2.27E+10	3.72E+10	7.85E+09	0.00E+00	1.15E+10	4.14E+09	2.01E+08
CS-136	1.01E+09	2.79E+09	1.80E+09	0.00E+00	1.49E+09	2.21E+08	9.80E+07
CS-137	3.23E+10	3.09E+10	4.56E+09	0.00E+00	1.01E+10	3.62E+09	1.93E+08
BA-140	1.18E+08	1.03E+05	6.86E+06	0.00E+00	3.35E+04	6.14E+04	5.96E+07
CE-141	2.19E+04	1.09E+04	1.62E+03	0.00E+00	4.79E+03	0.00E+00	1.36E+07
CE-144	1.63E+06	5.09E+05	8.67E+04	0.00E+00	2.82E+05	0.00E+00	1.33E+08
PR-143	7.18E+02	2.16E+02	3.56E+01	0.00E+00	1.17E+02	0.00E+00	7.75E+05
ND-147	4.45E+02	3.61E+02	2.79E+01	0.00E+00	1.98E+02	0.00E+00	5.71E+05

HISTORY INFO

TABLE 5.4.3

Pathway Dose Factors, Ri

AGE GROUP: TEEN PATHWAY: GRASS-COW-MILK

NUCLIDE	ORGAN DOSE FACTORS; m^2 - mrem/year per µCi/sec						
	BONE	LIVER	T.BODY	THYROID	KIDNEY	LUNG	GI-LLI
H-3	0.00E+00	9.93E+02	9.93E+02	9.93E+02	9.93E+02	9.93E+02	9.93E+02
C-14	4.86E+08	9.73E+07	9.73E+07	9.73E+07	9.73E+07	9.73E+07	9.73E+07
CR-51	0.00E+00	0.00E+00	4.99E+04	2.77E+04	1.09E+04	7.13E+04	8.39E+06
MN-54	0.00E+00	1.40E+07	2.78E+06	0.00E+00	4.19E+06	0.00E+00	2.88E+07
FE-55	4.46E+07	3.16E+07	7.37E+06	0.00E+00	0.00E+00	2.01E+07	1.37E+07
FE-59	5.19E+07	1.21E+08	4.68E+07	0.00E+00	0.00E+00	3.82E+07	2.86E+08
CO-58	0.00E+00	7.94E+06	1.83E+07	0.00E+00	0.00E+00	0.00E+00	1.10E+08
CO-60	0.00E+00	2.78E+07	6.27E+07	0.00E+00	0.00E+00	0.00E+00	3.62E+08
NI-63	1.18E+10	8.36E+08	4.01E+08	0.00E+00	0.00E+00	0.00E+00	1.33E+08
ZN-65	2.11E+09	7.32E+09	3.42E+09	0.00E+00	4.69E+09	0.00E+00	3.10E+09
RB-86	0.00E+00	4.73E+09	2.22E+09	0.00E+00	0.00E+00	0.00E+00	7.00E+08
SR-89	2.68E+09	0.00E+00	7.67E+07	0.00E+00	0.00E+00	0.00E+00	3.19E+08
SR-90	6.62E+10	0.00E+00	1.63E+10	0.00E+00	0.00E+00	0.00E+00	1.86E+09
Y-91	1.58E+04	0.00E+00	4.24E+02	0.00E+00	0.00E+00	0.00E+00	6.48E+06
ZR-95	1.65E+03	5.21E+02	3.58E+02	0.00E+00	7.65E+02	0.00E+00	1.20E+06
NB-95	1.41E+05	7.82E+04	4.30E+04	0.00E+00	7.58E+04	0.00E+00	3.34E+08
RU-103	1.81E+03	0.00E+00	7.75E+02	0.00E+00	6.39E+03	0.00E+00	1.51E+05
RU-106	3.76E+04	0.00E+00	4.73E+03	0.00E+00	7.24E+04	0.00E+00	1.80E+06
AG-110M	9.64E+07	9.12E+07	5.55E+07	0.00E+00	1.74E+08	0.00E+00	2.56E+10
TE-125M	3.01E+07	1.08E+07	4.02E+06	8.40E+06	0.00E+00	0.00E+00	8.87E+07
TE-127M	8.45E+07	3.06E+07	1.00E+07	2.01E+07	3.42E+08	0.00E+00	2.11E+08
TE-129M	1.10E+08	4.09E+07	1.74E+07	3.56E+07	4.61E+08	0.00E+00	4.14E+08
I-131	5.38E+08	7.52E+08	4.05E+08	2.20E+11	1.30E+09	0.00E+00	1.49E+08
I-133	7.08E+06	1.20E+07	3.66E+06	1.68E+09	2.11E+07	0.00E+00	9.09E+06
CS-134	9.83E+09	2.31E+10	1.07E+10	0.00E+00	7.35E+09	2.81E+09	2.88E+08
CS-136	4.49E+08	1.77E+09	1.19E+09	0.00E+00	9.63E+08	1.52E+08	1.42E+08
CS-137	1.34E+10	1.78E+10	6.21E+09	0.00E+00	6.06E+09	2.36E+09	2.54E+08
BA-140	4.87E+07	5.97E+04	3.14E+06	0.00E+00	2.02E+04	4.01E+04	7.51E+07
CE-141	8.89E+03	5.94E+03	6.82E+02	0.00E+00	2.80E+03	0.00E+00	1.70E+07
CE-144	6.59E+05	2.73E+05	3.54E+04	0.00E+00	1.63E+05	0.00E+00	1.66E+08
PR-143	2.90E+02	1.16E+02	1.44E+01	0.00E+00	6.73E+01	0.00E+00	9.55E+05
ND-147	1.81E+02	1.97E+02	1.18E+01	0.00E+00	1.16E+02	0.00E+00	7.12E+05

HISTORY ONLY

TABLE 5.4.4

Pathway Dose Factors, Ri

AGE GROUP: ADULT PATHWAY: GRASS-COW-MILK

NUCLIDE	ORGAN DOSE FACTORS; m^2 - mrem/year per µCi/sec						
	BONE	LIVER	T.BODY	THYROID	KIDNEY	LUNG	GI-LLI
H-3	0.00E+00	7.62E+02	7.62E+02	7.62E+02	7.62E+02	7.62E+02	7.62E+02
C-14	2.63E+08	5.26E+07	5.26E+07	5.26E+07	5.26E+07	5.26E+07	5.26E+07
CR-51	0.00E+00	0.00E+00	2.85E+04	1.70E+04	6.28E+03	3.78E+04	7.17E+06
MN-54	0.00E+00	8.40E+06	1.60E+06	0.00E+00	2.50E+06	0.00E+00	2.57E+07
FE-55	2.51E+07	1.73E+07	4.04E+06	0.00E+00	0.00E+00	9.86E+06	9.93E+06
FE-59	2.97E+07	6.97E+07	2.67E+07	0.00E+00	0.00E+00	1.96E+07	2.32E+08
CO-58	0.00E+00	4.71E+06	1.05E+07	0.00E+00	0.00E+00	0.00E+00	9.54E+07
CO-60	0.00E+00	1.64E+07	3.61E+07	0.00E+00	0.00E+00	0.00E+00	3.08E+08
NI-63	6.72E+09	4.65E+08	2.25E+08	0.00E+00	0.00E+00	0.00E+00	9.71E+07
ZN-65	1.37E+09	4.36E+09	1.97E+09	0.00E+00	2.91E+09	0.00E+00	2.74E+09
RB-86	0.00E+00	2.59E+09	1.21E+09	0.00E+00	0.00E+00	0.00E+00	5.10E+08
SR-89	1.45E+09	0.00E+00	4.16E+07	0.00E+00	0.00E+00	0.00E+00	2.32E+08
SR-90	4.67E+10	0.00E+00	1.15E+10	0.00E+00	0.00E+00	0.00E+00	1.35E+09
Y-91	8.57E+03	0.00E+00	2.29E+02	0.00E+00	0.00E+00	0.00E+00	4.72E+06
ZR-95	9.41E+02	3.02E+02	2.04E+02	0.00E+00	4.74E+02	0.00E+00	9.57E+05
NB-95	8.24E+04	4.58E+04	2.46E+04	0.00E+00	4.53E+04	0.00E+00	2.78E+08
RU-103	1.02E+03	0.00E+00	4.38E+02	0.00E+00	3.88E+03	0.00E+00	1.19E+05
RU-106	2.04E+04	0.00E+00	2.58E+03	0.00E+00	3.93E+04	0.00E+00	1.32E+06
AG-110M	5.81E+07	5.38E+07	3.19E+07	0.00E+00	1.06E+08	0.00E+00	2.19E+10
TE-125M	1.63E+07	5.89E+06	2.18E+06	4.89E+06	6.61E+07	0.00E+00	6.49E+07
TE-127M	4.57E+07	1.63E+07	5.57E+06	1.17E+07	1.86E+08	0.00E+00	1.53E+08
TE-129M	6.01E+07	2.24E+07	9.51E+06	2.06E+07	2.51E+08	0.00E+00	3.02E+08
I-131	2.96E+08	4.23E+08	2.42E+08	1.39E+11	7.25E+08	0.00E+00	1.12E+08
I-133	3.87E+06	6.73E+06	2.05E+06	9.88E+08	1.17E+07	0.00E+00	6.04E+06
CS-134	5.64E+09	1.34E+10	1.10E+10	0.00E+00	4.34E+09	1.44E+09	2.35E+08
CS-136	2.63E+08	1.04E+09	7.48E+08	0.00E+00	5.78E+08	7.92E+07	1.18E+08
CS-137	7.37E+09	1.01E+10	6.60E+09	0.00E+00	3.42E+09	1.14E+09	1.95E+08
BA-140	2.69E+07	3.38E+04	1.76E+06	0.00E+00	1.15E+04	1.94E+04	5.54E+07
CE-141	4.84E+03	3.27E+03	3.71E+02	0.00E+00	1.52E+03	0.00E+00	1.25E+07
CE-144	3.57E+05	1.49E+05	1.92E+04	0.00E+00	8.85E+04	0.00E+00	1.21E+08
PR-143	1.57E+02	6.32E+01	7.81E+00	0.00E+00	3.65E+01	0.00E+00	6.90E+05
ND-147	9.40E+01	1.09E+02	6.50E+00	0.00E+00	6.35E+01	0.00E+00	5.22E+05

HISTORY ONLY

TABLE 5.5.1

Pathway Dose Factors, Ri

AGE GROUP: INFANT PATHWAY: GRASS-GOAT-MILK

NUCLIDE	ORGAN DOSE FACTORS; m^2 - mrem/year per µCi/sec						
	BONE	LIVER	T.BODY	THYROID	KIDNEY	LUNG	GI-LLI
H-3	0.00E+00	4.86E+03	4.86E+03	4.86E+03	4.86E+03	4.86E+03	4.86E+03
C-14	2.34E+09	5.00E+08	5.00E+08	5.00E+08	5.00E+08	5.00E+08	5.00E+08
CR-51	0.00E+00	0.00E+00	1.94E+04	1.26E+04	2.76E+03	2.46E+04	5.64E+05
MN-54	0.00E+00	4.68E+06	1.06E+06	0.00E+00	1.04E+06	0.00E+00	1.72E+06
FE-55	1.76E+06	1.14E+06	3.03E+05	0.00E+00	0.00E+00	5.55E+05	1.44E+05
FE-59	2.92E+06	5.10E+06	2.01E+06	0.00E+00	0.00E+00	1.31E+06	2.44E+06
CO-58	0.00E+00	2.91E+06	7.26E+06	0.00E+00	0.00E+00	0.00E+00	7.25E+06
CO-60	0.00E+00	1.06E+07	2.50E+07	0.00E+00	0.00E+00	0.00E+00	2.52E+07
NI-63	4.19E+09	2.59E+08	1.46E+08	0.00E+00	0.00E+00	0.00E+00	1.29E+07
ZN-65	6.67E+08	2.29E+09	1.05E+09	0.00E+00	1.11E+09	0.00E+00	1.93E+09
RB-86	0.00E+00	2.67E+09	1.32E+09	0.00E+00	0.00E+00	0.00E+00	6.83E+07
SR-89	2.65E+10	0.00E+00	7.59E+08	0.00E+00	0.00E+00	0.00E+00	5.44E+08
SR-90	2.55E+11	0.00E+00	6.50E+10	0.00E+00	0.00E+00	0.00E+00	3.19E+09
Y-91	8.80E+03	0.00E+00	2.34E+02	0.00E+00	0.00E+00	0.00E+00	6.31E+05
ZR-95	8.17E+02	1.99E+02	1.41E+02	0.00E+00	2.15E+02	0.00E+00	9.91E+04
NB-95	7.13E+04	2.93E+04	1.70E+04	0.00E+00	2.10E+04	0.00E+00	2.48E+07
RU-103	1.04E+03	0.00E+00	3.48E+02	0.00E+00	2.17E+03	0.00E+00	1.27E+04
RU-106	2.28E+04	0.00E+00	2.85E+03	0.00E+00	2.70E+04	0.00E+00	1.73E+05
AG-110M	4.63E+07	3.38E+07	2.24E+07	0.00E+00	4.84E+07	0.00E+00	1.75E+09
TE-125M	1.81E+07	6.05E+06	2.45E+06	6.09E+06	0.00E+00	0.00E+00	8.62E+06
TE-127M	5.06E+07	1.08E+07	6.12E+06	1.46E+07	1.24E+08	0.00E+00	2.04E+07
TE-129M	6.69E+07	2.29E+07	1.03E+07	2.57E+07	1.67E+08	0.00E+00	3.99E+07
I-131	3.27E+09	3.85E+09	1.69E+09	1.27E+12	4.50E+09	0.00E+00	1.37E+08
I-133	4.36E+07	6.35E+07	1.86E+07	1.15E+10	7.46E+07	0.00E+00	1.07E+07
CS-134	1.09E+11	2.04E+11	2.06E+10	0.00E+00	5.26E+10	2.15E+10	5.55E+08
CS-136	5.94E+09	1.75E+10	6.52E+09	0.00E+00	6.96E+09	1.42E+09	2.65E+08
CS-137	1.54E+11	1.81E+11	1.28E+10	0.00E+00	4.85E+10	1.96E+10	5.65E+08
BA-140	2.90E+07	2.90E+04	1.50E+06	0.00E+00	6.89E+03	1.78E+04	7.13E+06
CE-141	5.21E+03	3.18E+03	3.74E+02	0.00E+00	9.79E+02	0.00E+00	1.64E+06
CE-144	2.79E+05	1.14E+05	1.56E+04	0.00E+00	4.62E+04	0.00E+00	1.60E+07
PR-143	1.78E+02	6.66E+01	8.83E+00	0.00E+00	2.48E+01	0.00E+00	9.40E+04
ND-147	1.06E+02	1.09E+02	6.66E+00	0.00E+00	4.19E+01	0.00E+00	6.89E+04

HISTORY INFO

TABLE 5.5.2

Pathway Dose Factors, Ri

AGE GROUP: CHILD PATHWAY: GRASS-GOAT-MILK

NUCLIDE	ORGAN DOSE FACTORS; m^2 - mrem/year per µCi/sec						
	BONE	LIVER	T.BODY	THYROID	KIDNEY	LUNG	GI-LLI
H-3	0.00E+00	3.20E+03	3.20E+03	3.20E+03	3.20E+03	3.20E+03	3.20E+03
C-14	1.20E+09	2.39E+08	2.39E+08	2.39E+08	2.39E+08	2.39E+08	2.39E+08
CR-51	0.00E+00	0.00E+00	1.22E+04	6.78E+03	1.85E+03	1.24E+04	6.48E+05
MN-54	0.00E+00	2.52E+06	6.71E+05	0.00E+00	7.06E+05	0.00E+00	2.11E+06
FE-55	1.45E+06	7.71E+05	2.39E+05	0.00E+00	0.00E+00	4.36E+05	1.43E+05
FE-59	1.56E+06	2.53E+06	1.26E+06	0.00E+00	0.00E+00	7.34E+05	2.64E+06
CO-58	0.00E+00	1.46E+06	4.46E+06	0.00E+00	0.00E+00	0.00E+00	8.49E+06
CO-60	0.00E+00	5.18E+06	1.53E+07	0.00E+00	0.00E+00	0.00E+00	2.87E+07
NI-63	3.56E+09	1.91E+08	1.21E+08	0.00E+00	0.00E+00	0.00E+00	1.28E+07
ZN-65	4.96E+08	1.32E+09	8.22E+08	0.00E+00	8.33E+08	0.00E+00	2.32E+08
RB-86	0.00E+00	1.05E+09	6.47E+08	0.00E+00	0.00E+00	0.00E+00	6.77E+07
SR-89	1.39E+10	0.00E+00	3.97E+08	0.00E+00	0.00E+00	0.00E+00	5.39E+08
SR-90	2.35E+11	0.00E+00	5.95E+10	0.00E+00	0.00E+00	0.00E+00	3.16E+09
Y-91	4.69E+03	0.00E+00	1.25E+02	0.00E+00	0.00E+00	0.00E+00	6.24E+05
ZR-95	4.60E+02	1.01E+02	9.00E+01	0.00E+00	1.45E+02	0.00E+00	1.05E+05
NB-95	3.82E+04	1.49E+04	1.06E+04	0.00E+00	1.40E+04	0.00E+00	2.75E+07
RU-103	5.14E+02	0.00E+00	1.98E+02	0.00E+00	1.29E+03	0.00E+00	1.33E+04
RU-106	1.11E+04	0.00E+00	1.38E+03	0.00E+00	1.50E+04	0.00E+00	1.73E+05
AG-110M	2.51E+07	1.69E+07	1.35E+07	0.00E+00	3.15E+07	0.00E+00	2.01E+09
TE-125M	8.86E+06	2.40E+06	1.18E+06	2.49E+06	0.00E+00	0.00E+00	8.55E+06
TE-127M	2.50E+07	6.72E+06	2.96E+06	5.97E+06	7.12E+07	0.00E+00	2.02E+07
TE-129M	3.26E+07	9.10E+06	5.06E+06	1.05E+07	9.56E+07	0.00E+00	3.97E+07
I-131	1.57E+09	1.57E+09	8.95E+08	5.21E+11	2.58E+09	0.00E+00	1.40E+08
I-133	2.06E+07	2.55E+07	9.66E+06	4.74E+09	4.25E+07	0.00E+00	1.03E+07
CS-134	6.80E+10	1.12E+11	2.35E+10	0.00E+00	3.46E+10	1.24E+10	6.01E+08
CS-136	3.04E+09	8.36E+09	5.41E+09	0.00E+00	4.45E+09	6.64E+08	2.94E+08
CS-137	9.68E+10	9.26E+10	1.37E+10	0.00E+00	3.02E+10	1.09E+10	5.80E+08
BA-140	1.41E+07	1.24E+04	8.23E+05	0.00E+00	4.02E+03	7.37E+03	7.15E+06
CE-141	2.63E+03	1.31E+03	1.95E+02	0.00E+00	5.74E+02	0.00E+00	1.63E+06
CE-144	1.95E+05	6.11E+04	1.04E+04	0.00E+00	3.38E+04	0.00E+00	1.59E+07
PR-143	8.61E+01	2.59E+01	4.27E+00	0.00E+00	1.40E+01	0.00E+00	9.29E+04
ND-147	5.34E+01	4.33E+01	3.35E+00	0.00E+00	2.37E+01	0.00E+00	6.85E+04

HISTORY INFO

TABLE 5.5.3

Pathway Dose Factors, Ri

AGE GROUP: TEEN PATHWAY: GRASS-GOAT-MILK

NUCLIDE	ORGAN DOSE FACTORS; m^2 - mrem/year per µCi/sec						
	BONE	LIVER	T.BODY	THYROID	KIDNEY	LUNG	GI-LLI
H-3	0.00E+00	2.04E+03	2.04E+03	2.04E+03	2.04E+03	2.04E+03	2.04E+03
C-14	4.86E+08	9.72E+07	9.72E+07	9.72E+07	9.72E+07	9.72E+07	9.72E+07
CR-51	0.00E+00	0.00E+00	5.99E+03	3.33E+03	1.31E+03	8.55E+03	1.01E+06
MN-54	0.00E+00	1.68E+06	3.34E+05	0.00E+00	5.02E+05	0.00E+00	3.45E+06
FE-55	5.79E+05	4.11E+05	9.58E+04	0.00E+00	0.00E+00	2.61E+05	1.78E+05
FE-59	6.74E+05	1.57E+06	6.08E+05	0.00E+00	0.00E+00	4.96E+05	3.72E+06
CO-58	0.00E+00	9.53E+05	2.20E+06	0.00E+00	0.00E+00	0.00E+00	1.31E+07
CO-60	0.00E+00	3.34E+06	7.52E+06	0.00E+00	0.00E+00	0.00E+00	4.35E+07
NI-63	1.42E+09	1.00E+08	4.81E+07	0.00E+00	0.00E+00	0.00E+00	1.60E+07
ZN-65	2.53E+08	8.78E+08	4.10E+08	0.00E+00	5.62E+08	0.00E+00	3.72E+08
RB-86	0.00E+00	5.67E+08	2.67E+08	0.00E+00	0.00E+00	0.00E+00	8.40E+07
SR-89	5.62E+09	0.00E+00	1.61E+08	0.00E+00	0.00E+00	0.00E+00	6.69E+08
SR-90	1.39E+11	0.00E+00	3.43E+10	0.00E+00	0.00E+00	0.00E+00	3.90E+09
Y-91	1.90E+03	0.00E+00	5.09E+01	0.00E+00	0.00E+00	0.00E+00	7.78E+05
ZR-95	1.98E+02	6.25E+01	4.30E+01	0.00E+00	9.18E+01	0.00E+00	1.44E+05
NB-95	1.69E+04	9.38E+03	5.16E+03	0.00E+00	9.09E+03	0.00E+00	4.01E+07
RU-103	2.17E+02	0.00E+00	9.29E+01	0.00E+00	7.66E+02	0.00E+00	1.82E+04
RU-106	4.50E+03	0.00E+00	5.66E+02	0.00E+00	8.69E+03	0.00E+00	2.16E+05
AG-110M	1.16E+07	1.09E+07	6.65E+06	0.00E+00	2.09E+07	0.00E+00	3.07E+09
TE-125M	3.61E+06	1.30E+06	4.82E+05	1.01E+06	0.00E+00	0.00E+00	1.06E+07
TE-127M	1.01E+07	3.69E+06	1.20E+06	2.41E+06	4.11E+07	0.00E+00	2.52E+07
TE-129M	1.32E+07	4.90E+06	2.09E+06	4.26E+06	5.53E+07	0.00E+00	4.96E+07
I-131	6.45E+06	9.03E+08	4.85E+08	2.64E+11	1.56E+09	0.00E+00	1.79E+08
I-133	8.49E+06	1.44E+07	4.40E+06	2.01E+09	2.53E+07	0.00E+00	1.09E+07
CS-134	2.95E+10	6.93E+10	3.22E+10	0.00E+00	2.20E+10	8.41E+09	8.62E+08
CS-136	1.35E+09	5.30E+09	3.56E+09	0.00E+00	2.89E+09	4.55E+08	4.27E+08
CS-137	4.02E+10	5.34E+10	1.86E+10	0.00E+00	1.82E+10	7.07E+09	7.60E+08
BA-140	5.84E+06	7.16E+03	3.76E+05	0.00E+00	2.43E+03	4.81E+03	9.01E+06
CE-141	1.07E+03	7.12E+02	8.18E+01	0.00E+00	3.35E+02	0.00E+00	2.04E+06
CE-144	7.90E+04	3.27E+04	4.25E+03	0.00E+00	1.95E+04	0.00E+00	1.99E+07
PR-143	3.48E+01	1.39E+01	1.73E+00	0.00E+00	8.08E+00	0.00E+00	1.15E+05
ND-147	2.18E+01	2.37E+01	1.42E+00	0.00E+00	1.39E+01	0.00E+00	8.54E+04

HISTORY INFO

TABLE 5.5.4

Pathway Dose Factors, Ri

AGE GROUP: ADULT PATHWAY: GRASS-GOAT-MILK

NUCLIDE	ORGAN DOSE FACTORS; m^2 - mrem/year per µCi/sec						
	BONE	LIVER	T.BODY	THYROID	KIDNEY	LUNG	GI-LLI
H-3	0.00E+00	1.56E+03	1.56E+03	1.56E+03	1.56E+03	1.56E+03	1.56E+03
C-14	2.64E+08	5.27E+07	5.27E+07	5.27E+07	5.27E+07	5.27E+07	5.27E+07
CR-51	0.00E+00	0.00E+00	3.43E+03	2.05E+03	7.56E+02	4.55E+03	8.63E+05
MN-54	0.00E+00	1.01E+06	1.93E+05	0.00E+00	3.01E+05	0.00E+00	3.10E+06
FE-55	3.27E+05	2.26E+05	5.26E+04	0.00E+00	0.00E+00	1.26E+05	1.30E+05
FE-59	3.87E+05	9.09E+05	3.48E+05	0.00E+00	0.00E+00	2.54E+05	3.03E+06
CO-58	0.00E+00	5.66E+05	1.27E+06	0.00E+00	0.00E+00	0.00E+00	1.15E+07
CO-60	0.00E+00	1.97E+06	4.35E+06	0.00E+00	0.00E+00	0.00E+00	3.70E+07
NI-63	8.08E+08	5.60E+07	2.71E+07	0.00E+00	0.00E+00	0.00E+00	1.17E+07
ZN-65	1.65E+08	5.24E+08	2.37E+08	0.00E+00	3.51E+08	0.00E+00	3.30E+08
RB-86	0.00E+00	3.12E+08	1.45E+08	0.00E+00	0.00E+00	0.00E+00	6.14E+07
SR-89	3.05E+09	0.00E+00	8.76E+07	0.00E+00	0.00E+00	0.00E+00	4.89E+08
SR-90	9.84E+10	0.00E+00	2.41E+10	0.00E+00	0.00E+00	0.00E+00	2.84E+09
Y-91	1.03E+03	0.00E+00	2.76E+01	0.00E+00	0.00E+00	0.00E+00	5.68E+05
ZR-95	1.13E+02	3.63E+01	2.46E+01	0.00E+00	5.70E+01	0.00E+00	1.15E+05
NB-95	9.92E+03	5.52E+03	2.97E+03	0.00E+00	5.45E+03	0.00E+00	3.35E+07
RU-103	1.22E+02	0.00E+00	5.27E+01	0.00E+00	4.67E+02	0.00E+00	1.43E+04
RU-106	2.45E+03	0.00E+00	3.18E+02	0.00E+00	4.73E+03	0.00E+00	1.59E+05
AG-110M	6.99E+06	6.47E+06	3.84E+06	0.00E+00	1.27E+07	0.00E+00	2.64E+09
TE-125M	1.96E+06	7.09E+05	2.62E+05	5.89E+05	7.96E+06	0.00E+00	7.81E+06
TE-127M	5.50E+06	1.97E+06	6.70E+05	1.41E+06	2.23E+07	0.00E+00	1.84E+07
TE-129M	7.23E+06	2.70E+06	1.14E+06	2.48E+06	3.02E+07	0.00E+00	3.64E+07
I-131	3.56E+08	5.89E+08	2.92E+08	1.67E+11	8.73E+08	0.00E+00	1.34E+08
I-133	4.65E+06	8.10E+06	2.47E+06	1.19E+09	1.41E+07	0.00E+00	7.28E+06
CS-134	1.70E+10	4.04E+10	3.30E+10	0.00E+00	1.31E+10	4.34E+09	7.07E+08
CS-136	7.92E+08	3.13E+09	2.25E+09	0.00E+00	1.74E+09	2.38E+08	3.55E+08
CS-137	2.22E+10	3.03E+10	1.99E+10	0.00E+00	1.03E+10	3.42E+09	5.87E+08
BA-140	3.24E+06	4.07E+03	2.12E+05	0.00E+00	1.38E+03	2.33E+03	6.67E+06
CE-141	5.82E+02	3.94E+02	4.47E+01	0.00E+00	1.83E+02	0.00E+00	1.51E+06
CE-144	4.30E+04	1.80E+04	2.31E+03	0.00E+00	1.07E+04	0.00E+00	1.45E+07
PR-143	1.90E+01	7.60E+00	9.40e-01	0.00E+00	4.39E+00	0.00E+00	8.30E+04
ND-147	1.13E+01	1.31E+01	7.82e-01	0.00E+00	7.65E+00	0.00E+00	6.28E+04

HISTORY INFO

TABLE 5.6.1

Pathway Dose Factors, Ri

AGE GROUP: INFANT PATHWAY: GRASS-COW-MEAT

NUCLIDE	ORGAN DOSE FACTORS; m^2 - mrem/year per µCi/sec						
	BONE	LIVER	T.BODY	THYROID	KIDNEY	LUNG	GI-LLI
H-3	0.00E+00	0.00E+00	0.00E+00	0.00E+00	0.00E+00	0.00E+00	0.00E+00
C-14	0.00E+00	0.00E+00	0.00E+00	0.00E+00	0.00E+00	0.00E+00	0.00E+00
CR-51	0.00E+00	0.00E+00	0.00E+00	0.00E+00	0.00E+00	0.00E+00	0.00E+00
MN-54	0.00E+00	0.00E+00	0.00E+00	0.00E+00	0.00E+00	0.00E+00	0.00E+00
FE-55	0.00E+00	0.00E+00	0.00E+00	0.00E+00	0.00E+00	0.00E+00	0.00E+00
FE-59	0.00E+00	0.00E+00	0.00E+00	0.00E+00	0.00E+00	0.00E+00	0.00E+00
CO-58	0.00E+00	0.00E+00	0.00E+00	0.00E+00	0.00E+00	0.00E+00	0.00E+00
CO-60	0.00E+00	0.00E+00	0.00E+00	0.00E+00	0.00E+00	0.00E+00	0.00E+00
NI-63	0.00E+00	0.00E+00	0.00E+00	0.00E+00	0.00E+00	0.00E+00	0.00E+00
ZN-65	0.00E+00	0.00E+00	0.00E+00	0.00E+00	0.00E+00	0.00E+00	0.00E+00
RB-86	0.00E+00	0.00E+00	0.00E+00	0.00E+00	0.00E+00	0.00E+00	0.00E+00
SR-89	0.00E+00	0.00E+00	0.00E+00	0.00E+00	0.00E+00	0.00E+00	0.00E+00
SR-90	0.00E+00	0.00E+00	0.00E+00	0.00E+00	0.00E+00	0.00E+00	0.00E+00
Y-91	0.00E+00	0.00E+00	0.00E+00	0.00E+00	0.00E+00	0.00E+00	0.00E+00
ZR-95	0.00E+00	0.00E+00	0.00E+00	0.00E+00	0.00E+00	0.00E+00	0.00E+00
NB-95	0.00E+00	0.00E+00	0.00E+00	0.00E+00	0.00E+00	0.00E+00	0.00E+00
RU-103	0.00E+00	0.00E+00	0.00E+00	0.00E+00	0.00E+00	0.00E+00	0.00E+00
RU-106	0.00E+00	0.00E+00	0.00E+00	0.00E+00	0.00E+00	0.00E+00	0.00E+00
AG-110M	0.00E+00	0.00E+00	0.00E+00	0.00E+00	0.00E+00	0.00E+00	0.00E+00
TE-125M	0.00E+00	0.00E+00	0.00E+00	0.00E+00	0.00E+00	0.00E+00	0.00E+00
TE-127M	0.00E+00	0.00E+00	0.00E+00	0.00E+00	0.00E+00	0.00E+00	0.00E+00
TE-129M	0.00E+00	0.00E+00	0.00E+00	0.00E+00	0.00E+00	0.00E+00	0.00E+00
I-131	0.00E+00	0.00E+00	0.00E+00	0.00E+00	0.00E+00	0.00E+00	0.00E+00
I-133	0.00E+00	0.00E+00	0.00E+00	0.00E+00	0.00E+00	0.00E+00	0.00E+00
CS-134	0.00E+00	0.00E+00	0.00E+00	0.00E+00	0.00E+00	0.00E+00	0.00E+00
CS-136	0.00E+00	0.00E+00	0.00E+00	0.00E+00	0.00E+00	0.00E+00	0.00E+00
CS-137	0.00E+00	0.00E+00	0.00E+00	0.00E+00	0.00E+00	0.00E+00	0.00E+00
BA-140	0.00E+00	0.00E+00	0.00E+00	0.00E+00	0.00E+00	0.00E+00	0.00E+00
CE-141	0.00E+00	0.00E+00	0.00E+00	0.00E+00	0.00E+00	0.00E+00	0.00E+00
CE-144	0.00E+00	0.00E+00	0.00E+00	0.00E+00	0.00E+00	0.00E+00	0.00E+00
PR-143	0.00E+00	0.00E+00	0.00E+00	0.00E+00	0.00E+00	0.00E+00	0.00E+00
ND-147	0.00E+00	0.00E+00	0.00E+00	0.00E+00	0.00E+00	0.00E+00	0.00E+00

HISTORY ONLY

TABLE 5.6.2

Pathway Dose Factors, Ri

AGE GROUP: CHILD PATHWAY: GRASS-COW-MEAT

NUCLIDE	ORGAN DOSE FACTORS; m^2 - mrem/year per µCi/sec						
	BONE	LIVER	T.BODY	THYROID	KIDNEY	LUNG	GI-LLI
H-3	0.00E+00	2.34E+02	2.34E+02	2.34E+02	2.34E+02	2.34E+02	2.34E+02
C-14	3.84E+08	7.67E+07	7.67E+07	7.67E+07	7.67E+07	7.67E+07	7.67E+07
CR-51	0.00E+00	0.00E+00	8.78E+03	4.88E+03	1.33E+03	8.90E+03	4.66E+05
MN-54	0.00E+00	8.01E+06	2.13E+06	0.00E+00	2.25E+06	0.00E+00	6.73E+06
FE-55	4.57E+08	2.43E+08	7.52E+07	0.00E+00	0.00E+00	1.37E+08	4.49E+07
FE-59	3.77E+08	6.10E+08	3.04E+08	0.00E+00	0.00E+00	1.72E+08	6.35E+08
CO-58	0.00E+00	1.64E+07	5.03E+07	0.00E+00	0.00E+00	0.00E+00	9.58E+07
CO-60	0.00E+00	6.93E+07	2.04E+08	0.00E+00	0.00E+00	0.00E+00	3.84E+08
NI-63	2.91E+10	1.56E+09	9.91E+08	0.00E+00	0.00E+00	0.00E+00	1.05E+08
ZN-65	3.76E+08	1.00E+09	6.22E+08	0.00E+00	6.31E+08	0.00E+00	1.76E+08
RB-86	0.00E+00	5.76E+08	3.54E+08	0.00E+00	0.00E+00	0.00E+00	3.71E+07
SR-89	4.82E+08	0.00E+00	1.38E+07	0.00E+00	0.00E+00	0.00E+00	1.87E+07
SR-90	1.04E+10	0.00E+00	2.64E+09	0.00E+00	0.00E+00	0.00E+00	1.40E+08
Y-91	1.80E+06	0.00E+00	4.82E+04	0.00E+00	0.00E+00	0.00E+00	2.40E+08
ZR-95	2.66E+06	5.86E+05	5.21E+05	0.00E+00	8.38E+05	0.00E+00	6.11E+08
NB-95	3.10E+06	1.21E+06	8.63E+05	0.00E+00	1.13E+06	0.00E+00	2.23E+09
RU-103	1.55E+08	0.00E+00	5.96E+07	0.00E+00	3.90E+08	0.00E+00	4.01E+09
RU-106	4.44E+09	0.00E+00	5.51E+08	0.00E+00	6.00E+09	0.00E+00	6.91E+10
AG-110M	8.39E+06	5.67E+06	4.53E+06	0.00E+00	1.06E+07	0.00E+00	6.74E+08
TE-125M	5.69E+08	1.54E+08	7.59E+07	1.60E+08	0.00E+00	0.00E+00	5.49E+08
TE-127M	1.78E+09	4.78E+08	2.11E+08	4.25E+08	5.06E+09	0.00E+00	1.44E+09
TE-129M	1.79E+09	5.00E+08	2.78E+08	5.77E+08	5.26E+09	0.00E+00	2.18E+09
I-131	1.66E+07	1.67E+07	9.48E+06	5.52E+09	2.74E+07	0.00E+00	1.48E+06
I-133	5.72e-01	7.08e-01	2.68e-01	1.31E+02	1.18E+00	0.00E+00	2.85e-01
CS-134	9.23E+08	1.51E+09	3.19E+08	0.00E+00	4.69E+08	1.68E+08	8.16E+06
CS-136	1.63E+07	4.48E+07	2.90E+07	0.00E+00	2.39E+07	3.56E+06	1.57E+06
CS-137	1.33E+09	1.28E+09	1.89E+08	0.00E+00	4.16E+08	1.50E+08	8.00E+06
BA-140	4.42E+07	3.87E+04	2.58E+06	0.00E+00	1.26E+04	2.31E+04	2.24E+07
CE-141	2.22E+04	1.11E+04	1.65E+03	0.00E+00	4.86E+03	0.00E+00	1.38E+07
CE-144	2.32E+06	7.26E+05	1.24E+05	0.00E+00	4.02E+05	0.00E+00	1.89E+08
PR-143	3.33E+04	1.00E+04	1.65E+03	0.00E+00	5.42E+03	0.00E+00	3.60E+07
ND-147	1.17E+04	9.48E+03	7.34E+02	0.00E+00	5.20E+03	0.00E+00	1.50E+07

HISTORY ONLY

TABLE 5.6.3

Pathway Dose Factors, Ri

AGE GROUP: TEEN PATHWAY: GRASS-COW-MEAT

NUCLIDE	ORGAN DOSE FACTORS; m^2 - mrem/year per µCi/sec						
	BONE	LIVER	T.BODY	THYROID	KIDNEY	LUNG	GI-LLI
H-3	0.00E+00	1.93E+02	1.93E+02	1.93E+02	1.93E+02	1.93E+02	1.93E+02
C-14	2.04E+08	4.08E+07	4.08E+07	4.08E+07	4.08E+07	4.08E+07	4.08E+07
CR-51	0.00E+00	0.00E+00	5.63E+03	3.13E+03	1.23E+03	8.03E+03	9.46E+05
MN-54	0.00E+00	7.00E+06	1.39E+06	0.00E+00	2.09E+06	0.00E+00	1.44E+07
FE-55	2.38E+08	1.69E+08	3.94E+07	0.00E+00	0.00E+00	1.07E+08	7.31E+07
FE-59	2.12E+08	4.95E+08	1.91E+08	0.00E+00	0.00E+00	1.56E+08	1.17E+09
CO-58	0.00E+00	1.40E+07	3.24E+07	0.00E+00	0.00E+00	0.00E+00	1.94E+08
CO-60	0.00E+00	5.83E+07	1.31E+08	0.00E+00	0.00E+00	0.00E+00	7.60E+08
NI-63	1.52E+10	1.07E+09	5.15E+08	0.00E+00	0.00E+00	0.00E+00	1.71E+08
ZN-65	2.50E+08	8.68E+08	4.05E+08	0.00E+00	5.56E+08	0.00E+00	3.68E+08
RB-86	0.00E+00	4.06E+08	1.91E+08	0.00E+00	0.00E+00	0.00E+00	6.00E+07
SR-89	2.55E+08	0.00E+00	7.29E+06	0.00E+00	0.00E+00	0.00E+00	3.03E+07
SR-90	8.04E+09	0.00E+00	1.99E+09	0.00E+00	0.00E+00	0.00E+00	2.26E+08
Y-91	9.54E+05	0.00E+00	2.56E+04	0.00E+00	0.00E+00	0.00E+00	3.91E+08
ZR-95	1.50E+06	4.73E+05	3.25E+05	0.00E+00	6.95E+05	0.00E+00	1.09E+09
NB-95	1.79E+06	9.95E+05	5.48E+05	0.00E+00	9.64E+05	0.00E+00	4.25E+09
RU-103	8.56E+07	0.00E+00	3.66E+07	0.00E+00	3.02E+08	0.00E+00	7.15E+09
RU-106	2.36E+09	0.00E+00	2.97E+08	0.00E+00	4.54E+09	0.00E+00	1.13E+11
AG-110M	5.06E+06	4.78E+06	2.91E+06	0.00E+00	9.13E+06	0.00E+00	1.34E+09
TE-125M	3.03E+08	1.09E+08	4.05E+07	8.46E+07	0.00E+00	0.00E+00	8.94E+08
TE-127M	9.41E+08	3.24E+08	1.12E+08	2.24E+08	3.81E+09	0.00E+00	2.35E+09
TE-129M	9.49E+08	3.52E+08	1.50E+08	3.06E+08	3.97E+09	0.00E+00	3.56E+09
I-131	8.93E+06	1.25E+07	6.72E+06	3.65E+09	2.15E+07	0.00E+00	2.47E+06
I-133	3.08e-01	5.22e-01	1.59e-01	7.29E+01	9.16e-01	0.00E+00	3.95e-01
CS-134	5.23E+08	1.23E+09	5.71E+08	0.00E+00	3.91E+08	1.49E+08	1.53E+07
CS-136	9.43E+06	3.71E+07	2.49E+07	0.00E+00	2.02E+07	3.18E+06	2.99E+06
CS-137	7.24E+08	9.63E+08	3.35E+08	0.00E+00	3.28E+08	1.27E+08	1.37E+07
BA-140	2.39E+07	2.93E+04	1.54E+06	0.00E+00	9.94E+03	1.97E+04	3.69E+07
CE-141	1.18E+04	7.87E+03	9.05E+02	0.00E+00	3.71E+03	0.00E+00	2.25E+07
CE-144	1.23E+06	5.08E+05	6.60E+04	0.00E+00	3.03E+05	0.00E+00	3.09E+08
PR-143	1.76E+04	7.03E+03	8.76E+02	0.00E+00	4.08E+03	0.00E+00	5.79E+07
ND-147	6.23E+03	6.78E+03	4.06E+02	0.00E+00	3.98E+03	0.00E+00	2.44E+07

HISTORY INFO

TABLE 5.6.4

Pathway Dose Factors, RI

AGE GROUP: ADULT PATHWAY: GRASS-COW-MEAT

NUCLIDE	ORGAN DOSE FACTORS; m^2 - mrem/year per µCi/sec						
	BONE	LIVER	T.BODY	THYROID	KIDNEY	LUNG	GI-LLI
H-3	0.00E+00	3.24E+02	3.24E+02	3.24E+02	3.24E+02	3.24E+02	3.24E+02
C-14	2.42E+08	4.83E+07	4.83E+07	4.83E+07	4.83E+07	4.83E+07	4.83E+07
CR-51	0.00E+00	0.00E+00	7.04E+03	4.21E+03	1.55E+03	9.35E+03	1.77E+06
MN-54	0.00E+00	9.18E+06	1.75E+06	0.00E+00	2.73E+06	0.00E+00	2.81E+07
FE-55	2.93E+08	2.03E+08	4.73E+07	0.00E+00	0.00E+00	1.12E+08	1.16E+08
FE-59	2.66E+08	6.25E+08	2.39E+08	0.00E+00	0.00E+00	1.75E+08	2.08E+09
CO-58	0.00E+00	1.82E+07	4.09E+07	0.00E+00	0.00E+00	0.00E+00	3.70E+08
CO-60	0.00E+00	7.52E+07	1.66E+08	0.00E+00	0.00E+00	0.00E+00	1.41E+09
NI-63	1.89E+10	1.31E+09	6.33E+08	0.00E+00	0.00E+00	0.00E+00	2.73E+08
ZN-65	3.56E+08	1.13E+09	5.12E+08	0.00E+00	7.57E+07	0.00E+00	7.13E+08
RB-86	0.00E+00	4.87E+08	2.27E+08	0.00E+00	0.00E+00	0.00E+00	9.59E+07
SR-89	3.02E+08	0.00E+00	8.66E+06	0.00E+00	0.00E+00	0.00E+00	4.84E+07
SR-90	1.24E+10	0.00E+00	3.05E+09	0.00E+00	0.00E+00	0.00E+00	3.60E+08
Y-91	1.13E+06	0.00E+00	3.03E+04	0.00E+00	0.00E+00	0.00E+00	6.24E+08
ZR-95	1.87E+06	6.01E+05	4.07E+05	0.00E+00	9.43E+05	0.00E+00	1.90E+09
NB-95	2.30E+06	1.28E+06	6.87E+05	0.00E+00	1.26E+06	0.00E+00	7.76E+09
RU-103	1.05E+08	0.00E+00	4.93E+07	0.00E+00	4.02E+08	0.00E+00	1.23E+10
RU-106	2.80E+09	0.00E+00	3.54E+08	0.00E+00	5.41E+09	0.00E+00	1.81E+11
AG-110M	6.68E+06	6.18E+06	3.67E+06	0.00E+00	1.22E+07	0.00E+00	2.52E+09
TE-125M	3.59E+08	1.30E+08	4.81E+07	1.08E+08	1.46E+09	0.00E+00	1.43E+09
TE-127M	1.12E+09	3.99E+08	1.36E+08	2.85E+08	4.53E+09	0.00E+00	3.74E+09
TE-129M	1.13E+09	4.23E+08	1.79E+08	3.89E+08	4.73E+09	0.00E+00	5.71E+09
I-131	1.08E+07	1.54E+07	8.82E+06	5.04E+09	2.64E+07	0.00E+00	4.06E+06
I-133	3.68e-01	6.41e-01	1.95e-01	9.42E+01	1.12E+00	0.00E+00	5.76e-01
CS-134	6.58E+08	1.57E+09	1.28E+09	0.00E+00	5.07E+08	1.68E+08	2.74E+07
CS-136	1.21E+07	4.78E+07	3.44E+07	0.00E+00	2.66E+07	3.65E+06	5.43E+06
CS-137	8.72E+08	1.19E+09	7.82E+08	0.00E+00	4.05E+08	1.35E+08	2.31E+07
BA-140	2.90E+07	3.64E+04	1.90E+06	0.00E+00	1.24E+04	2.08E+04	5.96E+07
CE-141	1.41E+04	9.51E+03	1.08E+03	0.00E+00	4.42E+03	0.00E+00	3.64E+07
CE-144	1.46E+06	6.10E+05	7.83E+04	0.00E+00	3.62E+05	0.00E+00	4.93E+08
PR-143	2.09E+04	8.40E+03	1.04E+03	0.00E+00	4.85E+03	0.00E+00	9.17E+07
ND-147	7.08E+03	8.18E+03	4.90E+02	0.00E+00	4.78E+03	0.00E+00	3.93E+07

HISTORY ONLY

TABLE 5.7.1

Pathway Dose Factors, Ri

AGE GROUP: INFANT PATHWAY: VEGETATION

NUCLIDE	ORGAN DOSE FACTORS; m^2 - mrem/year per µCi/sec						
	BONE	LIVER	T.BODY	THYROID	KIDNEY	LUNG	GI-LLI
H-3	0.00E+00	0.00E+00	0.00E+00	0.00E+00	0.00E+00	0.00E+00	0.00E+00
C-14	0.00E+00	0.00E+00	0.00E+00	0.00E+00	0.00E+00	0.00E+00	0.00E+00
CR-51	0.00E+00	0.00E+00	0.00E+00	0.00E+00	0.00E+00	0.00E+00	0.00E+00
MN-54	0.00E+00	0.00E+00	0.00E+00	0.00E+00	0.00E+00	0.00E+00	0.00E+00
FE-55	0.00E+00	0.00E+00	0.00E+00	0.00E+00	0.00E+00	0.00E+00	0.00E+00
FE-59	0.00E+00	0.00E+00	0.00E+00	0.00E+00	0.00E+00	0.00E+00	0.00E+00
CO-58	0.00E+00	0.00E+00	0.00E+00	0.00E+00	0.00E+00	0.00E+00	0.00E+00
CO-60	0.00E+00	0.00E+00	0.00E+00	0.00E+00	0.00E+00	0.00E+00	0.00E+00
NI-63	0.00E+00	0.00E+00	0.00E+00	0.00E+00	0.00E+00	0.00E+00	0.00E+00
ZN-65	0.00E+00	0.00E+00	0.00E+00	0.00E+00	0.00E+00	0.00E+00	0.00E+00
RB-86	0.00E+00	0.00E+00	0.00E+00	0.00E+00	0.00E+00	0.00E+00	0.00E+00
SR-89	0.00E+00	0.00E+00	0.00E+00	0.00E+00	0.00E+00	0.00E+00	0.00E+00
SR-90	0.00E+00	0.00E+00	0.00E+00	0.00E+00	0.00E+00	0.00E+00	0.00E+00
Y-91	0.00E+00	0.00E+00	0.00E+00	0.00E+00	0.00E+00	0.00E+00	0.00E+00
ZR-95	0.00E+00	0.00E+00	0.00E+00	0.00E+00	0.00E+00	0.00E+00	0.00E+00
NB-95	0.00E+00	0.00E+00	0.00E+00	0.00E+00	0.00E+00	0.00E+00	0.00E+00
RU-103	0.00E+00	0.00E+00	0.00E+00	0.00E+00	0.00E+00	0.00E+00	0.00E+00
RU-106	0.00E+00	0.00E+00	0.00E+00	0.00E+00	0.00E+00	0.00E+00	0.00E+00
AG-110M	0.00E+00	0.00E+00	0.00E+00	0.00E+00	0.00E+00	0.00E+00	0.00E+00
TE-125M	0.00E+00	0.00E+00	0.00E+00	0.00E+00	0.00E+00	0.00E+00	0.00E+00
TE-127M	0.00E+00	0.00E+00	0.00E+00	0.00E+00	0.00E+00	0.00E+00	0.00E+00
TE-129M	0.00E+00	0.00E+00	0.00E+00	0.00E+00	0.00E+00	0.00E+00	0.00E+00
I-131	0.00E+00	0.00E+00	0.00E+00	0.00E+00	0.00E+00	0.00E+00	0.00E+00
I-133	0.00E+00	0.00E+00	0.00E+00	0.00E+00	0.00E+00	0.00E+00	0.00E+00
CS-134	0.00E+00	0.00E+00	0.00E+00	0.00E+00	0.00E+00	0.00E+00	0.00E+00
CS-136	0.00E+00	0.00E+00	0.00E+00	0.00E+00	0.00E+00	0.00E+00	0.00E+00
CS-137	0.00E+00	0.00E+00	0.00E+00	0.00E+00	0.00E+00	0.00E+00	0.00E+00
BA-140	0.00E+00	0.00E+00	0.00E+00	0.00E+00	0.00E+00	0.00E+00	0.00E+00
CE-141	0.00E+00	0.00E+00	0.00E+00	0.00E+00	0.00E+00	0.00E+00	0.00E+00
CE-144	0.00E+00	0.00E+00	0.00E+00	0.00E+00	0.00E+00	0.00E+00	0.00E+00
PR-143	0.00E+00	0.00E+00	0.00E+00	0.00E+00	0.00E+00	0.00E+00	0.00E+00
ND-147	0.00E+00	0.00E+00	0.00E+00	0.00E+00	0.00E+00	0.00E+00	0.00E+00

HISTORY ONLY

TABLE 5.7.2

Pathway Dose Factors, Ri

AGE GROUP: CHILD PATHWAY: VEGETATION

NUCLIDE	ORGAN DOSE FACTORS; m^2 - mrem/year per µCi/sec						
	BONE	LIVER	T.BODY	THYROID	KIDNEY	LUNG	GI-LLI
H-3	0.00E+00	4.02E+03	4.02E+03	4.02E+03	4.02E+03	4.02E+03	4.02E+03
C-14	8.89E+08	1.78E+08	1.78E+08	1.78E+08	1.78E+08	1.78E+08	1.78E+08
CR-51	0.00E+00	0.00E+00	1.17E+05	6.49E+04	1.77E+04	1.18E+05	6.20E+06
MN-54	0.00E+00	6.65E+08	1.77E+08	0.00E+00	1.86E+08	0.00E+00	5.58E+08
FE-55	8.01E+08	4.25E+08	1.32E+08	0.00E+00	0.00E+00	2.40E+08	7.87E+07
FE-59	3.98E+08	6.44E+08	3.21E+08	0.00E+00	0.00E+00	1.87E+08	6.71E+08
CO-58	0.00E+00	6.44E+07	1.97E+08	0.00E+00	0.00E+00	0.00E+00	3.76E+08
CO-60	0.00E+00	3.78E+08	1.12E+09	0.00E+00	0.00E+00	0.00E+00	2.10E+09
NI-63	3.95E+10	2.11E+09	1.34E+09	0.00E+00	0.00E+00	0.00E+00	1.42E+08
ZN-65	8.12E+08	2.16E+09	1.35E+09	0.00E+00	1.36E+09	0.00E+00	3.80E+08
RB-86	0.00E+00	4.51E+08	2.77E+08	0.00E+00	0.00E+00	0.00E+00	2.90E+07
SR-89	3.60E+10	0.00E+00	1.03E+09	0.00E+00	0.00E+00	0.00E+00	1.39E+09
SR-90	1.24E+12	0.00E+00	3.15E+11	0.00E+00	0.00E+00	0.00E+00	1.67E+10
Y-91	1.87E+07	0.00E+00	4.99E+05	0.00E+00	0.00E+00	0.00E+00	2.49E+09
ZR-95	3.86E+06	8.48E+05	7.55E+05	0.00E+00	1.21E+06	0.00E+00	8.85E+08
NB-95	4.11E+05	1.60E+05	1.14E+05	0.00E+00	1.50E+05	0.00E+00	2.96E+08
RU-103	1.53E+07	0.00E+00	5.90E+06	0.00E+00	3.86E+07	0.00E+00	3.97E+08
RU-106	7.45E+08	0.00E+00	9.30E+07	0.00E+00	1.01E+09	0.00E+00	1.16E+10
AG-110M	3.21E+07	2.17E+07	1.73E+07	0.00E+00	4.04E+07	0.00E+00	2.58E+09
TE-125M	3.51E+08	9.50E+07	4.67E+07	9.84E+07	0.00E+00	0.00E+00	3.38E+08
TE-127M	1.32E+09	3.55E+08	1.57E+08	3.16E+08	3.77E+09	0.00E+00	1.07E+09
TE-129M	8.40E+08	2.35E+08	1.30E+08	2.71E+08	2.47E+09	0.00E+00	1.02E+09
I-131	1.43E+08	1.44E+08	8.18E+07	4.76E+10	2.36E+08	0.00E+00	1.28E+07
I-133	3.53E+06	4.37E+06	1.65E+06	8.12E+08	7.28E+06	0.00E+00	1.76E+06
CS-134	1.60E+10	2.63E+10	5.55E+09	0.00E+00	8.15E+09	2.93E+09	1.42E+08
CS-136	8.28E+07	2.28E+08	1.47E+08	0.00E+00	1.21E+08	1.81E+07	8.00E+06
CS-137	2.39E+10	2.29E+10	3.38E+09	0.00E+00	7.46E+09	2.68E+09	1.43E+08
BA-140	2.79E+08	2.44E+05	1.63E+07	0.00E+00	7.96E+04	1.46E+05	1.41E+08
CE-141	6.57E+05	3.28E+05	4.86E+04	0.00E+00	1.44E+05	0.00E+00	4.09E+08
CE-144	1.27E+08	3.99E+07	6.79E+06	0.00E+00	2.21E+07	0.00E+00	1.04E+10
PR-143	1.45E+05	4.36E+04	7.21E+03	0.00E+00	2.36E+04	0.00E+00	1.57E+08
ND-147	7.15E+04	5.79E+04	4.49E+03	0.00E+00	3.18E+04	0.00E+00	9.18E+07

HISTORY INFO

TABLE 5.7.3

Pathway Dose Factors, Ri

AGE GROUP: TEEN PATHWAY: VEGETATION

NUCLIDE	ORGAN DOSE FACTORS; m^2 - mrem/year per µCi/sec						
	BONE	LIVER	T.BODY	THYROID	KIDNEY	LUNG	GI-LLI
H-3	0.00E+00	2.59E+03	2.59E+03	2.59E+03	2.59E+03	2.59E+03	2.59E+03
C-14	3.69E+08	7.38E+07	7.38E+07	7.38E+07	7.38E+07	7.38E+07	7.38E+07
CR-51	0.00E+00	0.00E+00	6.16E+04	3.42E+04	1.35E+04	8.79E+04	1.03E+07
MN-54	0.00E+00	4.54E+08	9.01E+07	0.00E+00	1.36E+08	0.00E+00	9.32E+08
FE-55	3.26E+08	2.31E+08	5.39E+07	0.00E+00	0.00E+00	1.47E+08	1.00E+08
FE-59	1.80E+08	4.19E+08	1.62E+08	0.00E+00	0.00E+00	1.32E+08	9.91E+08
CO-58	0.00E+00	4.36E+07	1.01E+08	0.00E+00	0.00E+00	0.00E+00	6.01E+08
CO-60	0.00E+00	2.49E+08	5.60E+08	0.00E+00	0.00E+00	0.00E+00	3.24E+09
NI-63	1.61E+10	1.13E+09	5.45E+08	0.00E+00	0.00E+00	0.00E+00	1.81E+08
ZN-65	4.24E+08	1.47E+09	6.86E+08	0.00E+00	9.42E+08	0.00E+00	6.23E+08
RB-86	0.00E+00	2.73E+08	1.28E+08	0.00E+00	0.00E+00	0.00E+00	4.04E+07
SR-89	1.52E+10	0.00E+00	4.34E+08	0.00E+00	0.00E+00	0.00E+00	1.80E+09
SR-90	7.51E+11	0.00E+00	1.85E+11	0.00E+00	0.00E+00	0.00E+00	2.11E+10
Y-91	7.84E+06	0.00E+00	2.10E+05	0.00E+00	0.00E+00	0.00E+00	3.22E+09
ZR-95	1.72E+06	5.43E+05	3.73E+05	0.00E+00	7.98E+05	0.00E+00	1.25E+09
NB-95	1.92E+05	1.07E+05	5.87E+04	0.00E+00	1.03E+05	0.00E+00	4.56E+08
RU-103	6.82E+06	0.00E+00	2.62E+06	0.00E+00	2.41E+07	0.00E+00	5.70E+08
RU-106	3.09E+08	0.00E+00	3.90E+07	0.00E+00	5.97E+08	0.00E+00	1.48E+10
AG-110M	1.52E+07	1.43E+07	8.72E+06	0.00E+00	2.74E+07	0.00E+00	4.03E+09
TE-125M	1.48E+08	5.34E+07	1.98E+07	4.14E+07	0.00E+00	0.00E+00	4.37E+08
TE-127M	5.52E+08	1.86E+08	5.56E+07	1.31E+08	2.24E+09	0.00E+00	1.37E+09
TE-129M	3.61E+08	1.34E+08	5.72E+07	1.17E+08	1.51E+09	0.00E+00	1.36E+09
I-131	7.69E+07	1.08E+08	5.78E+07	3.14E+10	1.85E+08	0.00E+00	2.13E+07
I-133	1.94E+06	3.29E+06	1.00E+06	4.59E+08	5.77E+06	0.00E+00	2.49E+06
CS-134	7.10E+09	1.67E+10	7.75E+09	0.00E+00	5.31E+09	2.03E+09	2.08E+08
CS-136	4.39E+07	1.73E+08	1.16E+08	0.00E+00	9.41E+07	1.48E+07	1.39E+07
CS-137	1.01E+10	1.35E+10	4.69E+09	0.00E+00	4.59E+09	1.78E+09	1.92E+08
BA-140	1.39E+08	1.71E+05	8.97E+06	0.00E+00	5.78E+04	1.15E+05	2.15E+08
CE-141	2.83E+05	1.89E+05	2.17E+04	0.00E+00	8.90E+04	0.00E+00	5.41E+08
CE-144	5.28E+07	2.18E+07	2.83E+06	0.00E+00	1.30E+07	0.00E+00	1.33E+10
PR-143	6.99E+04	2.79E+04	3.48E+03	0.00E+00	1.62E+04	0.00E+00	2.30E+08
ND-147	3.62E+04	3.94E+04	2.36E+03	0.00E+00	2.31E+04	0.00E+00	1.42E+08

HISTORY INFO

TABLE 5.7.4

Pathway Dose Factors, Ri

AGE GROUP: ADULT PATHWAY: VEGETATION

NUCLIDE	ORGAN DOSE FACTORS; m^2 - mrem/year per µCi/sec						
	BONE	LIVER	T.BODY	THYROID	KIDNEY	LUNG	GI-LLI
H-3	0.00E+00	2.26E+03	2.26E+03	2.26E+03	2.26E+03	2.26E+03	2.26E+03
C-14	2.28E+08	4.55E+07	4.55E+07	4.55E+07	4.55E+07	4.55E+07	4.55E+07
CR-51	0.00E+00	0.00E+00	4.64E+04	2.77E+04	1.02E+04	6.15E+04	1.17E+07
MN-54	0.00E+00	3.13E+08	5.97E+07	0.00E+00	9.31E+07	0.00E+00	9.58E+08
FE-55	2.10E+08	1.45E+08	3.38E+07	0.00E+00	0.00E+00	8.06E+07	8.31E+07
FE-59	1.26E+08	2.97E+08	1.14E+08	0.00E+00	0.00E+00	8.29E+07	9.89E+08
CO-58	0.00E+00	3.07E+07	6.89E+07	0.00E+00	0.00E+00	0.00E+00	6.23E+08
CO-60	0.00E+00	1.67E+08	3.69E+08	0.00E+00	0.00E+00	0.00E+00	3.14E+09
NI-63	1.04E+10	7.21E+08	3.49E+08	0.00E+00	0.00E+00	0.00E+00	1.50E+08
ZN-65	3.17E+08	1.01E+09	4.56E+08	0.00E+00	6.75E+08	0.00E+00	6.36E+08
RB-86	0.00E+00	2.19E+08	1.02E+08	0.00E+00	0.00E+00	0.00E+00	4.32E+07
SR-89	9.98E+09	0.00E+00	2.86E+08	0.00E+00	0.00E+00	0.00E+00	1.60E+09
SR-90	6.05E+11	0.00E+00	1.48E+11	0.00E+00	0.00E+00	0.00E+00	1.75E+10
Y-91	5.12E+06	0.00E+00	1.37E+05	0.00E+00	0.00E+00	0.00E+00	2.82E+09
ZR-95	1.17E+06	3.77E+05	2.55E+05	0.00E+00	5.91E+05	0.00E+00	1.19E+09
NB-95	1.42E+05	7.92E+04	4.26E+04	0.00E+00	7.83E+04	0.00E+00	4.81E+08
RU-103	4.77E+06	0.00E+00	2.06E+06	0.00E+00	1.82E+07	0.00E+00	5.57E+08
RU-106	1.93E+08	0.00E+00	2.44E+07	0.00E+00	3.72E+08	0.00E+00	1.25E+10
AG-110M	1.05E+07	9.75E+06	5.79E+06	0.00E+00	1.92E+07	0.00E+00	3.98E+09
TE-125M	9.66E+07	3.50E+07	1.29E+07	2.90E+07	3.93E+08	0.00E+00	3.86E+08
TE-127M	3.49E+08	1.25E+08	4.26E+07	8.93E+07	1.42E+09	0.00E+00	1.17E+09
TE-129M	2.51E+08	9.37E+07	3.97E+07	8.63E+07	1.05E+09	0.00E+00	1.26E+09
I-131	8.08E+07	1.16E+08	6.62E+07	3.79E+10	1.98E+08	0.00E+00	3.05E+07
I-133	2.09E+06	3.63E+06	1.11E+06	5.34E+08	6.33E+06	0.00E+00	3.26E+06
CS-134	4.67E+09	1.11E+10	9.08E+09	0.00E+00	3.59E+09	1.19E+09	1.94E+08
CS-136	4.28E+07	1.69E+08	1.22E+08	0.00E+00	9.41E+07	1.29E+07	1.92E+07
CS-137	6.36E+09	8.70E+09	5.70E+09	0.00E+00	2.95E+09	9.81E+08	1.68E+08
BA-140	1.29E+08	1.62E+05	8.47E+06	0.00E+00	5.52E+04	9.29E+04	2.66E+08
CE-141	1.97E+05	1.33E+05	1.51E+04	0.00E+00	6.20E+04	0.00E+00	5.10E+08
CE-144	3.29E+07	1.38E+07	1.77E+06	0.00E+00	8.16E+06	0.00E+00	1.11E+10
PR-143	6.25E+04	2.51E+04	3.10E+03	0.00E+00	1.45E+04	0.00E+00	2.74E+08
ND-147	3.34E+04	3.85E+04	2.31E+03	0.00E+00	2.25E+04	0.00E+00	1.85E+08

HISTORY INFO

6.0 TMI-1 GASEOUS WASTE TREATMENT SYSTEM

6.1 Description of the TMI-1 Gaseous Radwaste Treatment System (see Figure 6.1)

6.1.1 Waste Gas System

a. Reactor Building:

- Reactor Coolant Drain Tank (RCDT) header

b. Auxiliary Building:

- Vent Header from
  1. Miscellaneous Waste Storage Tank (MWST)
  2. Three (3) Reactor Coolant Bleed Tanks (RCBT)
- Waste Gas Delay Tank
- Two (2) Waste Gas Compressors
- Three (3) Waste Gas Decay Tanks (WGDT)

c. Filtration and dilution provided by the Station Ventilation System.

6.2 Operability

Operability of the Gaseous Waste Treatment System is defined as the ability to remove gas from the vent header/tank gas spaces and store it under a higher pressure in the Waste Gas Decay Tanks for subsequent release.

Except for initiating the make up tank sample and waste gas venting and the recycle or disposal of compressed waste gases stored in the waste gas decay tanks, the operation of the waste gas system is entirely automatic. One waste gas compressor comes on automatically, removing gases from the vent header system as required, to maintain the pressure in the system at a maximum of about 16.4 psia.

HISTORY INFO

FIGURE 6.1

Waste Gas System

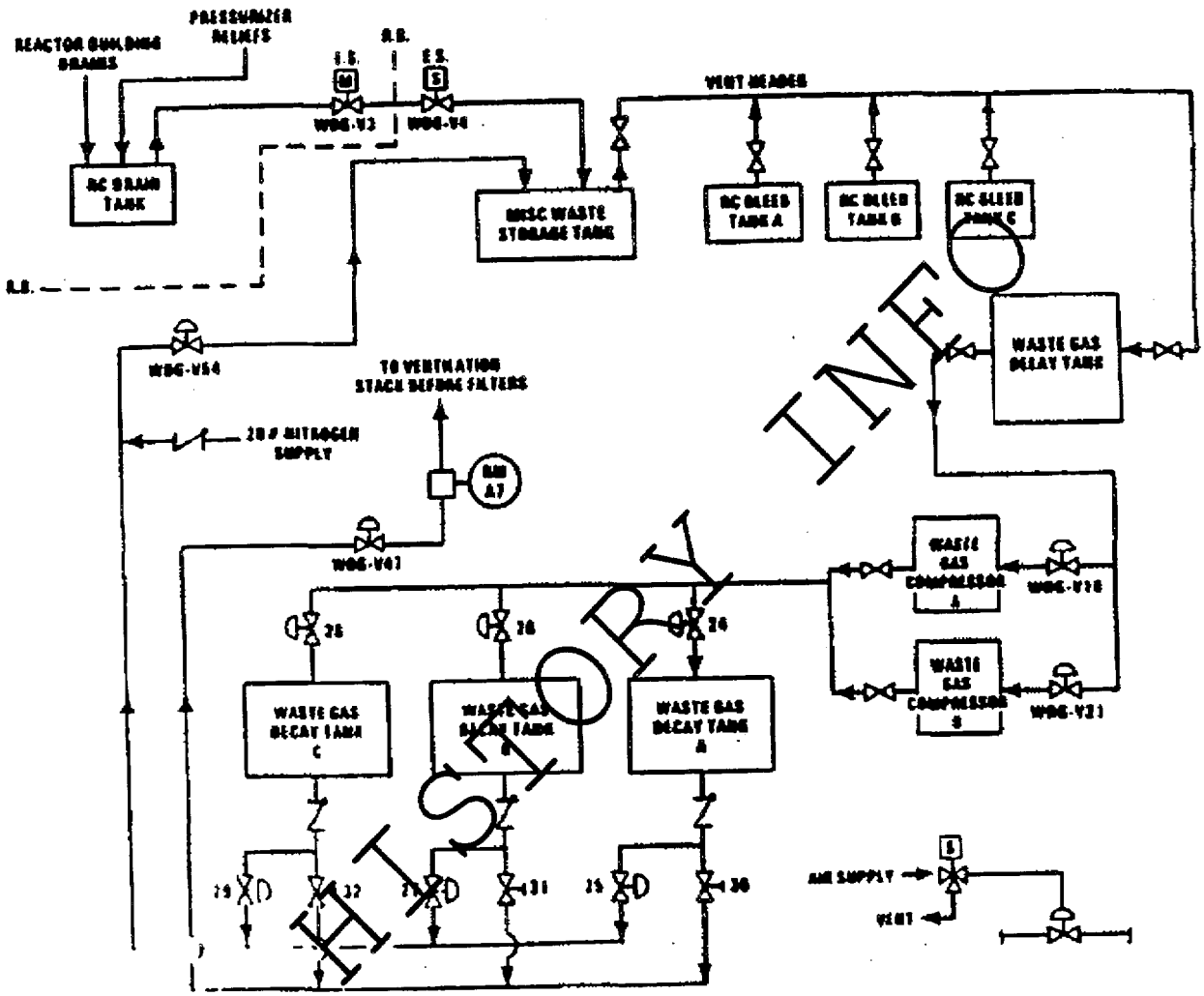

7.0 EFFLUENT TOTAL DOSE ASSESSMENT

7.1 Total Dose Calculation

The annual (calendar year) dose or dose commitment to any member of the public, due to releases of radioactivity and to radiation from uranium fuel cycle sources shall be limited to less than or equal to 25 mrem to the total body or any organ except the thyroid, which shall be limited to less than or equal to 75 mrem. This control is provided in order to meet the dose limitations of 40 CFR 190.

The total dose from TMI-1 and TMI-2 (uranium fuel cycle facilities within 8 kilometers) is calculated by summing the calculated annual doses to critical organs of a real individual for liquid effluent using Section 2.1 methodology, for gaseous effluent using Section 5.2.1 and 5.2.2 methodology, and the direct radiation from the site from the environmental monitoring program's direct radiation (TLD) monitors.

HISTORY INFO

8.0 TMINS RADIOLOGICAL ENVIRONMENTAL MONITORING PROGRAM (REMP)

8.1 Monitoring Program Requirements

8.1.1 Controls

In accordance with the TMI-1 Tech. Specs. and TMI-2 PDMS Tech. Specs., the radiological environmental monitoring program shall be conducted as specified in Table 8.1.

8.1.2 Applicability

At all times.

8.1.3 Action

a. With the radiological environmental monitoring program not being conducted as specified in Table 8.1, prepare and submit to the Commission in the Annual Radiological Environmental Operating Report, a description of the reasons for not conducting the program as required and the plans for preventing a recurrence.

b. With the level of radioactivity as the result of plant effluents in an environmental sampling medium exceeding the reporting levels of Table 8.2 when averaged over any calendar quarter, prepare and submit to the Commission within 30 days from the end of the affected calendar quarter, a special report that identifies the cause(s) for exceeding the limit(s) and defines the corrective actions to be taken to reduce radioactive effluents so that the potential annual dose* to a member of the public is less than the calendar year limits of ODCM Part I Controls 2.2.1.2, 2.2.2.2 and 2.2.2.3 and ODCM Part II Controls 2.2.1.2, 2.2.2.2 and 2.2.2.3. When more than one of the radionuclides in Table 8.2 are detected as the result of plant effluents in the sampling medium, this report shall be submitted if:

$$\frac{\text{concentration (1)}}{\text{reportinglevel (1)}} + \frac{\text{concentration (2)}}{\text{reporting level (2)}} + \geq 1.0$$

When radionuclides other than those in Table 8.2 are detected and are the result of plant effluents, this report shall be submitted if the potential annual dose* to a member of the public is equal to or greater than the calendar year limits of ODCM Part I Controls 2.2.1.2, 2.2.2.2 and 2.2.2.3 and ODCM Part II, Controls 2.2.1.2, 2.2.2.2 and 2.2.2.3. This report is not required if the measured level of radioactivity was not the result of plant effluents; however, in such an event, the condition shall be reported and described in the Annual Radiological Environmental Operating Report.

HISTORY INFO

* The methodology and parameters used to estimate the potential annual dose to a member of the public shall be indicated in this report.

c. With milk or fresh leafy vegetation samples unavailable from one or more of the sample locations required by Table 8.1, identify specific locations for obtaining replacement samples and add them within 30 days to the Radiological Environmental Monitoring Program given in the ODCM. The specific locations from which samples were unavailable may then be deleted from the monitoring program. Pursuant to TMI-1 Tech. Spec. 6.14 and TMI-2 PDMS Tech. Spec. 6.12, submit in the next Annual Radioactive Effluent Release Report documentation for a change in the ODCM including a revised figure(s) and table for the ODCM reflecting the new location(s) with supporting information identifying the cause of the unavailability of samples and justifying the selection of the new location(s) for obtaining samples.

8.1.4 Bases

The radiological monitoring program required by this control provides representative measurements of radiation and of radioactive materials in those exposure pathways and for those radionuclides which lead to the highest potential radiation exposures of members of the general public resulting from the station operation. This monitoring program implements Section IV B.2 of Appendix I to 10CFR50 and thereby supplements the radiological effluent monitoring program by verifying that the measurable concentrations of radioactive materials and levels of radiation are not higher than expected on the basis of the effluent measurements and modeling of the environmental exposure pathways. Guidance for this monitoring is provided by the Radiological Assessment Branch Technical Position on Environmental Monitoring (Revision 1, November 1979). Program changes may be initiated based on operational experience.

8.1.5 Surveillance Requirements

The radiological environmental monitoring samples shall be collected pursuant to Table 8.1, from the specific locations given in Tables 8.4 through 8.10 and Maps 8.1 through 8.3, and shall be analyzed pursuant to the requirements of Table 8.1 and the detection capabilities required by Table 8.3.

HISTORY ONLY

8.2 Land Use Census

8.2.1 Controls

In accordance with the TMI-1 Tech. Specs. and TMI-2 PDMS Tech. Specs., a Land Use Census shall be conducted and shall identify within a distance of 8 km (5 miles) the location in each of the 16 meteorological sectors of the nearest milk animal, the nearest residence; and the nearest garden* of greater than 50 m^2 (500 ft^2) producing broad leaf vegetation.

8.2.2 Applicability

At all times.

8.2.3 Action

a. With a Land Use Census identifying a location(s) that yields a calculated dose or dose commitment greater than the values currently being calculated in ODCM Part I Surveillance 3.2.2.3.1, pursuant to ODCM, Part IV, Section 2.0, identify the new location(s) in the next Annual Radioactive Effluent Release Report.

b. With a Land Use Census identifying a location(s) that yields a calculated dose or dose commitment (via the same exposure pathway) 20% greater than at a location from which samples are currently being obtained in accordance with Table 8.1, add the new location(s) within 30 days to the Radiological Environmental Monitoring Program given in the ODCM. The sampling location(s), excluding the control station location, having the lowest calculated dose or dose commitment(s), via the same exposure pathway, may be deleted from this monitoring program after October 31 of the year in which this Land Use Census was conducted. Pursuant to TMI-1 Tech. Spec. 6.14 and TMI-2 PDMS Tech. Spec. 6.12, submit in the next Annual Radioactive Effluent Release Report documentation for a change in the ODCM including a revised figure(s) and table(s) for the ODCM reflecting the new location(s) with information supporting the change in sampling locations.

HISTORY INFO

* Broad leaf vegetation sampling of at least three different kinds of vegetation may be performed at the site boundary in each of two different sectors with the highest predicted D/Qs in lieu of the garden census. Requirements for broad leaf sampling in Table 8.1 shall be followed, including analysis of control samples.

8.2.4 Bases

This Control is provided to ensure that changes in the use of unrestricted areas are identified and modifications to the monitoring program are made if required by the results of this census. The best information from the door-to-door survey, aerial surveys, or consulting with local agricultural authorities shall be used. This census satisfies the requirements of Section IV.B.3 of Appendix I to 10 CFR 50. Restricting the census to gardens of greater than 500 square feet (50 m^2) provides assurance that significant exposure pathways via leafy vegetables will be identified and monitored since a garden of this size is the minimum required to produce the quantity (26 kg/yr) of leafy vegetables assumed in Regulatory Guide 1.109 for consumption by a child. To determine this minimum garden size, the following assumptions were used: 1) that 20% of the garden was used for growing broad leaf vegetation (i.e., similar to lettuce and cabbage), and 2) a vegetation yield of 2 kg/square meter.

8.2.5 Surveillance Requirements

The Land Use Census shall be conducted during the growing season at least once per 12 months, using that information that will provide the best results, such as by a door-to-door survey, aerial survey, or by consulting local agricultural authorities. The results of the Land Use Census shall be included in the Annual Radiological Environmental Operating Report pursuant to ODCM, Part IV, Section 1.0.

HISTORY INFO

8.3 Interlaboratory Comparison Program

8.3.1 Controls

In accordance with the TMI-1 Tech. Specs. and TMI-2 PDMS Tech. Specs., analyses shall be performed on radioactive materials supplied as part of an Interlaboratory Comparison Program which has been approved by the Commission (NRC). Only those samples and analyses which are required by Table 8.1 shall be performed.

8.3.2 Applicability

At all times.

8.3.3 Action

With analysis not being performed as required above, report the corrective action taken to prevent a recurrence to the Commission in the Annual Radiological Environmental Operating Report.

8.3.4 Bases

The requirement for participation in an approved Interlaboratory Comparison Program is provided to ensure that independent checks on precision and accuracy of the measurements of radioactive material in environmental sample matrices are performed as part of a quality assurance program for environmental monitoring in order to demonstrate that the results are reasonably valid for the purpose of Section IV, B.2 of Appendix I to 10 CFR 50.

8.3.5 Surveillance Requirements

A summary of the Interlaboratory Comparison Program results shall be included in the Annual Radiological Environmental Operating Report.

HISTORY INFO

TABLE 8.1

Sample Collection and Analysis Requirements

Exposure Pathway and/or Sample	Number of Samples and Sample Locations[a]	Sampling and Collection Frequency[b]	Type and Frequency of Analysis[b]
1. Airborne Radioiodine and Particulates	Samples from 5 locations from Table 8.4.	Continuous sampler operation with sample collection weekly, or more frequently if required by dust loading.	Radioiodine Canister: Analyze weekly for I-131. Particulate Filter: Analyze for gross beta radioactivity following filter change[d]. Perform gamma isotopic analysis[e] on composite (by location) sample quarterly.
2. Direct Radiation[c]	Samples from 40 locations from Table 8.5 (using either 2 dosimeters or at least 1 instrument for continuously measuring and recording dose rate at each location).	Sample Quarterly	Analyze for gamma dose quarterly.

HISTORY INFO

TABLE 8.1

Sample Collection and Analysis Requirements

Exposure Pathway and/or Sample	Number of Samples and Sample Locations[a]	Sampling and Collection Frequency[b]	Type and Frequency of Analysis[b]
3. Waterborne			
a. Surface[f]	Samples from 2 locations from Table 8.6. • 1 sample from downstream (indicator) location • 1 sample from upstream (control) location (or location not influenced by the station discharge)	Composite[g] sample over 1 monthly period.	Perform gamma isotopic analysis[e] monthly. Composite for tritium analysis quarterly.
b. Drinking	Samples from 2 locations from Table 8.6. • 1 sample at the location of the nearest water supply that could be affected by the station discharge. • 1 sample from a control location.	Composite[g] sample over 1 monthly period.	Perform gross beta and gamma isotopic analysis[e] monthly. Perform Sr-90 analysis if gross beta of monthly composite >10 times control. Composite for tritium analysis quarterly.
c. Sediment from Shoreline	Samples from 2 locations (1 Control and 1 Indicator) from Table 8.7.	Sample twice per year (Spring and Fall)	Perform gamma isotopic analysis[e] on each sample.

HISTORY INFO

TABLE 8.1

Sample Collection and Analysis Requirements

Exposure Pathway and/or Sample	Number of Samples and Sample Locations[a]	Sampling and Collection Frequency[b]	Type and Frequency of Analysis[b]
4. Ingestion			
a. Milk	Samples from 4 locations from Table 8.8.	Sample semimonthly when animals are on pasture; monthly at other times.	Perform gamma isotopic analysis[e] and I-131 analysis on each sample. Composite for Sr-90 analysis quarterly.
b. Fish	Samples from 2 locations from Table 8.9. • 1 sample of recreationally important bottom feeders and 1 sample of recreationally important predators in the vicinity of the station discharge. • 1 sample of recreationally important bottom feeders and 1 sample of recreationally important predators from an area not influenced by the station discharge.	Sample twice per year (Spring and Fall).	Perform gamma isotopic[e] and Sr-90 analysis on edible portions.
c. Food Products	Samples from 2 locations from Table 8.10 (when available) • 1 sample of green leafy vegetables or leafy vegetation at a location in the immediate vicinity of the station. (indicator) • 1 sample of same species or group from a location not influenced by the station discharge.	Sample at time of harvest.	Perform gamma isotopic[e], I-131, and Sr-90 analysis on edible portions.

HISTORY INFO

TABLE 8.1

Sample Collection and Analysis Requirements

Table Notation

a. Sampling locations are provided in Tables 8.4 through 8.10. They are depicted in Maps 8.1 through 8.3. Deviations are permitted from the required sampling schedule if specimens are unobtainable due to hazardous conditions, seasonal unavailability, malfunction of automatic sampling equipment and other legitimate reasons. All deviations from the sampling schedule shall be explained in the Annual Radiological Environmental Operating Report.

b. Frequency notation: weekly (7 days), semimonthly (15 days), monthly (31 days), and quarterly (92 days). All surveillance requirements shall be performed within the specified time interval with a maximum allowable extension not to exceed 25% of the surveillance interval. A total maximum combined interval time for any 4 consecutive tests shall not exceed 3.25 times the specified collection or analysis interval.

c. One or more instruments, such as a pressurized ion chamber for measuring and recording dose rate continuously, may be used in place of, or in addition to, integrating dosimeters. For the purpose of this table, a thermoluminescent dosimeter (TLD) is considered to be one phosphor; two or more phosphors in a packet are considered as two or more dosimeters. Film badges shall not be used as dosimeters for measuring direct radiation.

d. Airborne particulate sample filters shall be analyzed for gross beta radioactivity 24 hours or more after sampling to allow for radon and thoron daughter decay. If gross beta activity in an air particulate sample(s) is greater than ten times the calendar year mean of control samples, Sr-90 and gamma isotopic analysis shall be performed on the individual sample(s).

e. Gamma isotopic analysis means the identification and quantification of gamma-emitting radionuclides that may be attributable to the effluents from the facility.

f. The "upstream sample" shall be taken at a distance beyond significant influence of the discharge. The "downstream sample" shall be taken in an area beyond but near the mixing zone.

g. Composite sample aliquots shall be collected at time intervals that are short (e.g., hourly) relative to the compositing period (e.g., monthly) in order to assure obtaining a representative sample.

HISTORY INFO

TABLE 8.2

Reporting Levels for Radioactivity Concentrations in Environmental Samples

Analysis	Water (pCi/L)	Airborne Particulate or gas (pCi/m^3)	Fish (pCi/kg,wet)	Milk (pCi/L)	Food Products (pCi/kg, wet)
H-3	20,000[a]				
Mn-54	1000		30,000		
Fe-59	400		10,000		
Co-58	1000		30,000		
Co-60	300		10,000		
Zn-65	300		20,000		
Sr-90	8	0.1	100	8	100
Zr-Nb-95	400				
I-131	2	0.9		3	100
Cs-134	30	10	1000	60	1000
Cs-137	50	20	2000	70	2000
Ba-La-140	200			300	

[a] For drinking water samples. This is 40 CFR Part 141 value.

HISTORY INFO

TABLE 8.3

Detection Capabilities for Environmental Sample Analysis[a]

Lower Limit of Detection (LLD)[b,c]

Analysis	Water (pCi/L)	Airborne Particulate or Gas (pCi/m^3)	Fish (pCi/kg, wet)	Milk (pCi/L)	Food Products (pCi/kg,wet)	Sediment (pCi/kg, dry)
Gross Beta	4	0.01				
H-3	2000					
Mn-54	15		130			
Fe-59	30		260			
Co-58, 60	15		130			
Zn-65	30		260			
Zr-95	30					
Sr-90	2	0.01	10	2	10	
Nb-95	15					
I-131	1[d]	0.07		1	60	
Cs-134	15	0.05	130	15	60	150
Cs-137	18	0.06	150	18	80	180
Ba-140	60			60		
La-140	15			15		

HISTORY INFO

TABLE 8.3

Detection Capabilities for Environmental Sample Analysis[a]
Table Notation

a. This list does not mean that only these nuclides are to be considered. Other peaks that are identifiable, which may be related to plant operations, together with those of the above nuclides, shall also be analyzed and reported in the Annual Radiological Environmental Operating Report.

b. Required detection capabilities for thermoluminescent dosimeters used for environmental measurements are given in Regulatory Guide 4.13 (Rev. 1).

c. The LLD is defined, for purposes of these controls, as the smallest concentration of radioactive material in a sample that will yield a net count, above system background, that will be detected with 95% probability with only 5% probability of falsely concluding that a blank observation represents a "real" signal.

For a particular measurement system (which may include radiochemical separation):

$$LLD = \frac{4.66\, S_b}{E \bullet V \bullet 2.22 \bullet Y \bullet \exp(-\lambda \Delta t)}$$

Where:

LLD is the "a priori" lower limit of detection as defined above, as picocuries per unit mass or volume.

s_b is the standard deviation of the background counting rate or of the counting rate of a blank sample as appropriate, as counts per minute,

E is the counting efficiency, as counts per disintegration,

V is the sample size in units of mass or volume,

2.22 is the number of disintegrations per minute per picocurie,

Y is the fractional radiochemical yield (when applicable),

λ is the radioactive decay constant for the particular radionuclide and

Δt for environmental samples is the elapsed time between sample collection, or end of the sample collection period, and time of counting.

Typical values of E, V, Y and Δt should be used in the calculation.

It should be recognized that the LLD is defined as an "a priori" (before the fact) limit representing the capability of a measurement system and not as an "a posteriori" (after the fact) limit for a particular measurement. Analyses shall be performed in such a manner that the stated LLDs will be achieved under routine conditions. Occasionally background fluctuations, unavoidable small samples sizes, the presence of interfering nuclides, or other uncontrollable circumstances may render these LLDs unachievable. In such cases, the contributing factors shall be identified and described in the Annual Radiological Environmental Operating Report.

d. LLD for drinking water.

HISTORY INFO

TABLE 8.4

TMINS REMP Station Locations-Air Particulate and Air Iodine

Station Code	Distance (miles)	Azimuth (°)	Map No.
B1-4	0.8	28	60
E1-2	0.4	95	2
F1-3	0.6	105	70
G2-1	1.4	125	74
M2-1	1.3	253	3
A3-1	2.6	358	4
H3-1	2.3	159	5
Q4-1	3.5	325	61
Q15-1	13.5	305	8

TABLE 8.5

TMINS REMP Station Locations-Direct Radiation (TLD)

Station Code	Distance (miles)	Azimuth (°)	Map No.
A1-4	0.3	5	9
B1-1	0.6	25	10
B1-2	0.4	26	11
C1-2	0.3	54	13
D1-1	0.2	74	14
E1-2	0.4	95	2
E1-4	0.2	98	16
F1-2	0.2	109	17
G1-3	0.8	129	18
H1-1	0.5	167	19
J1-1	0.8	184	21
J1-3	0.3	189	22
K1-4	0.2	208	24
L1-1	0.1	235	26
M1-1	0.1	249	27
N1-3	0.1	270	28
P1-1	0.4	293	29
P1-2	0.2	290	30

HISTORY INFO

TABLE 8.5

TMINS REMP Station Locations-Direct Radiation (TLD)

Station Code	Distance (miles)	Azimuth (°)	Map No.
Q1-2	0.2	318	31
R1-1	0.2	335	32
C2-1	1.6	48	33
K2-1	1.1	200	34
M2-1	1.3	253	3
A3-1	2.6	358	4
H3-1	2.3	159	5
R3-1	2.6	338	35
B5-1	4.8	18	36
C5-1	4.5	42	37
E5-1	4.6	81	38
F5-1	4.7	107	39
G5-1	4.8	131	40
H5-1	4.1	157	41
J5-1	4.9	182	42
K5-1	5.0	200	43
L5-1	4.1	228	44
M5-1	4.3	249	45
N5-1	4.9	268	46
P5-1	4.9	285	47
Q5-1	5.0	318	48
R5-1	4.9	339	49
D6-1	5.2	65	50
E7-1	6.8	86	51
Q9-1	8.5	308	52
B10-1	9.1	21	53
G10-1	9.8	127	6
G15-1	14.4	124	54
J15-1	12.6	180	7
Q15-1	13.5	305	8

HISTORY INFO

TABLE 8.6

TMINS REMP Station Locations-Surface Water

Station Code	Distance (miles)	Azimuth (°)	Map No.
J1-2 (R)	0.5	188	57
A3-2 (R)	2.5	355	59
Q9-1 (F)	8.5	308	52
Q9-1 (R)	8.5	308	52
G15-2 (F)	13.6	128	62
G15-3 (F)	14.8	124	63
F15-1 (R)	12.6	122	65

(R) = Raw Water
(F) = Finished Water

TABLE 8.7

TMINS REMP Station Locations-Aquatic Sediment

Station Code	Distance (miles)	Azimuth (°)	Map No.
A1-3	0.5	0	67
G1-1	0.3	137	68
K1-3	0.3	202	69
J2-1	1.5	182	58
J1-2	0.5	188	57

HISTORY INFO

TABLE 8.8

TMINS REMP Station Locations-Milk

Station Code	Distance (miles)	Azimuth (°)	Map No.
D2-1	1.1	65	72
E2-2	1.1	93	73
G2-1	1.4	125	74
P7-1	6.7	293	77
K15-3	14.5	205	78

TABLE 8.9

TMINS REMP Station Locations-Fish

Station Code	Station Location
IND	Downstream of Station Discharge
BKG	Upstream of Station Discharge

HISTORY INFO

TABLE 8.10

TMINS REMP Station Locations-Food Products

Station Code	Distance (miles)	Azimuth (°)	Map No.
D1-3	0.5	65	79
E1-2	0.4	95	2
F1-1	0.5	117	80
A15-1	10.5	10	85
B10-2	10.1	28	55

HISTORY INFO

MAP 8.1
THREE MILE ISLAND NUCLEAR STATION
LOCATIONS OF RADIOLOGICAL ENVIRONMENTAL MONITORING PROGRAM
STATIONS WITHIN 1 MILE OF THE SITE

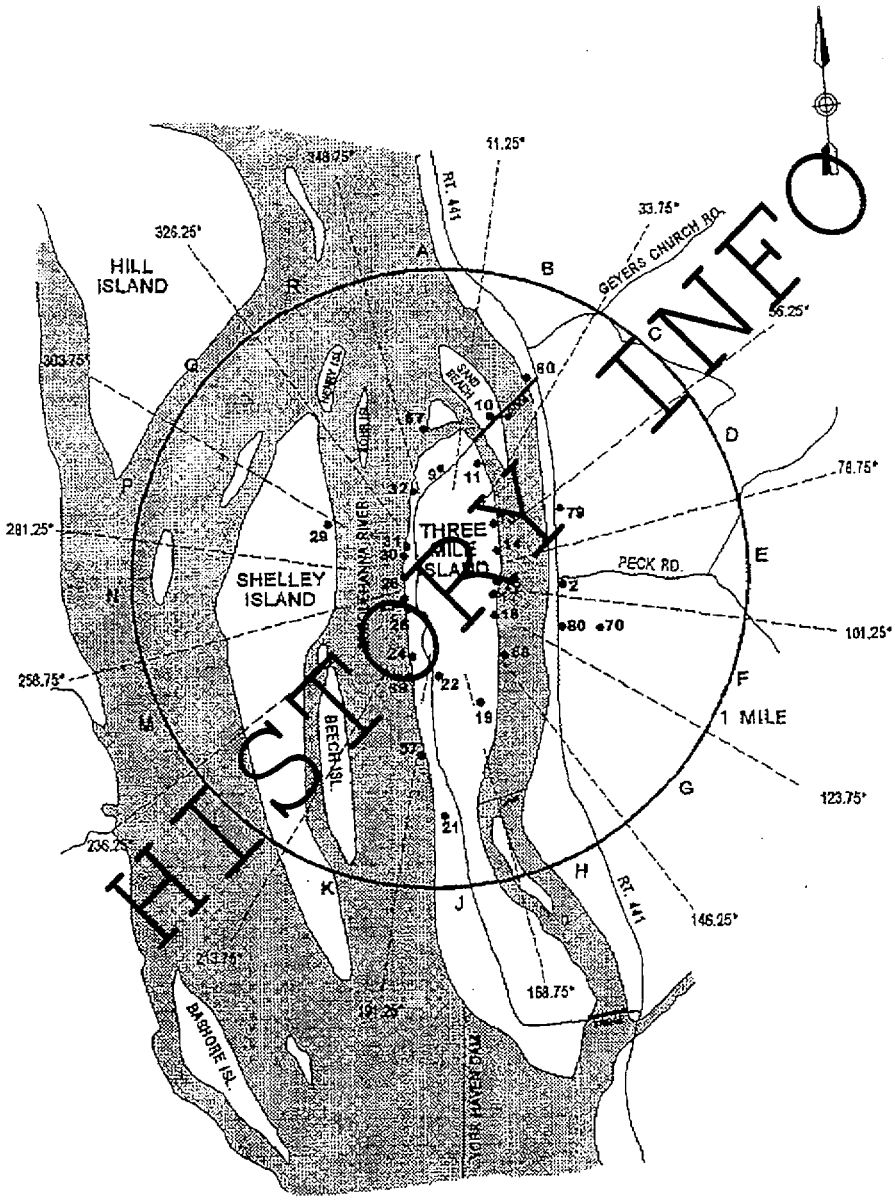

HISTORY INFO

MAP 8.2
THREE MILE ISLAND NUCLEAR STATION
LOCATIONS OF RADIOLOGICAL ENVIRONMENTAL MONITORING PROGRAM
STATIONS WITHIN 5 MILES OF THE SITE

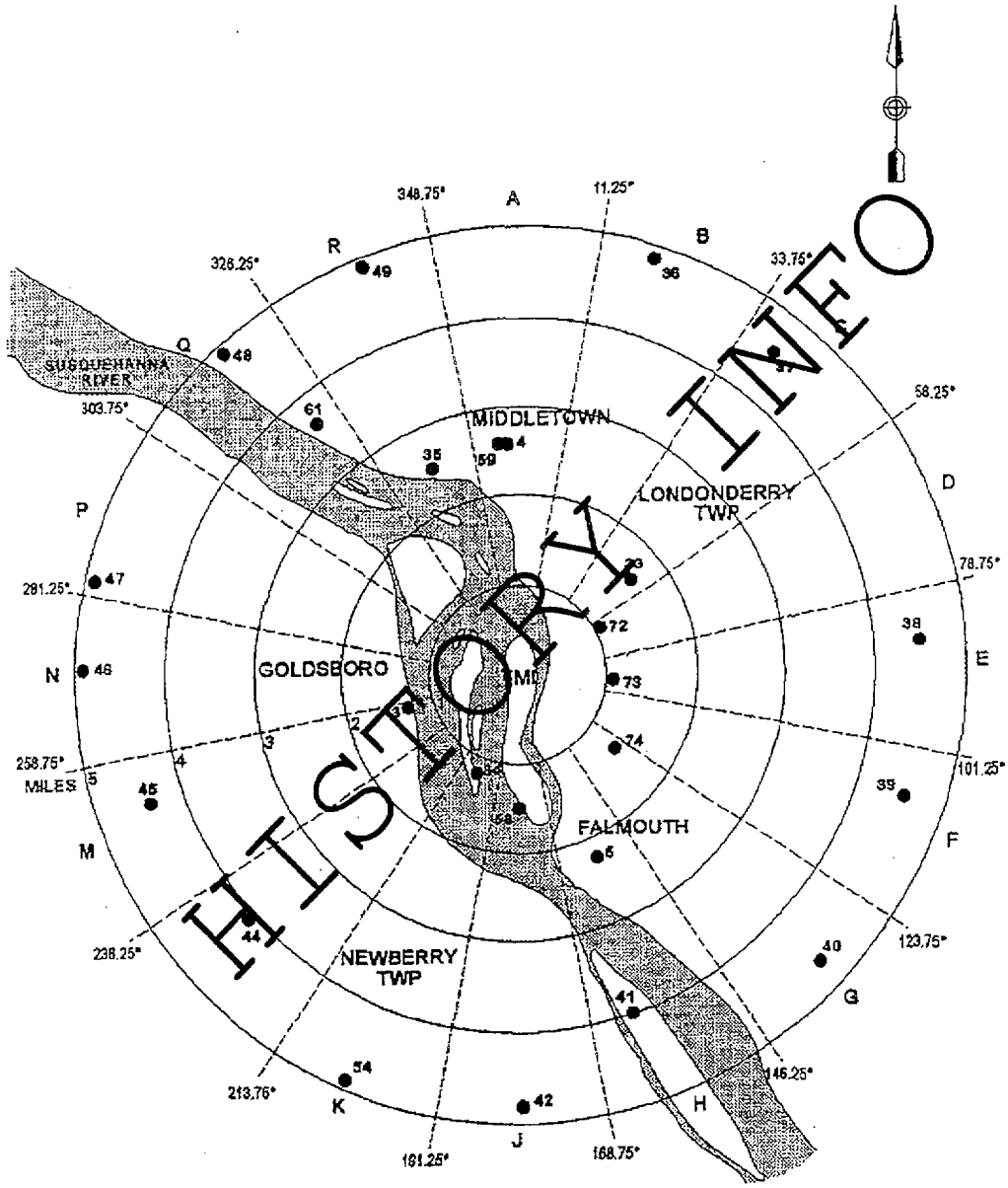

HISTORY INFO

MAP 8.3
THREE MILE ISLAND NUCLEAR STATION
LOCATIONS OF RADIOLOGICAL ENVIRONMENTAL MONITORING PROGRAM
STATIONS GREATER THAN 5 MILES FROM THE SITE

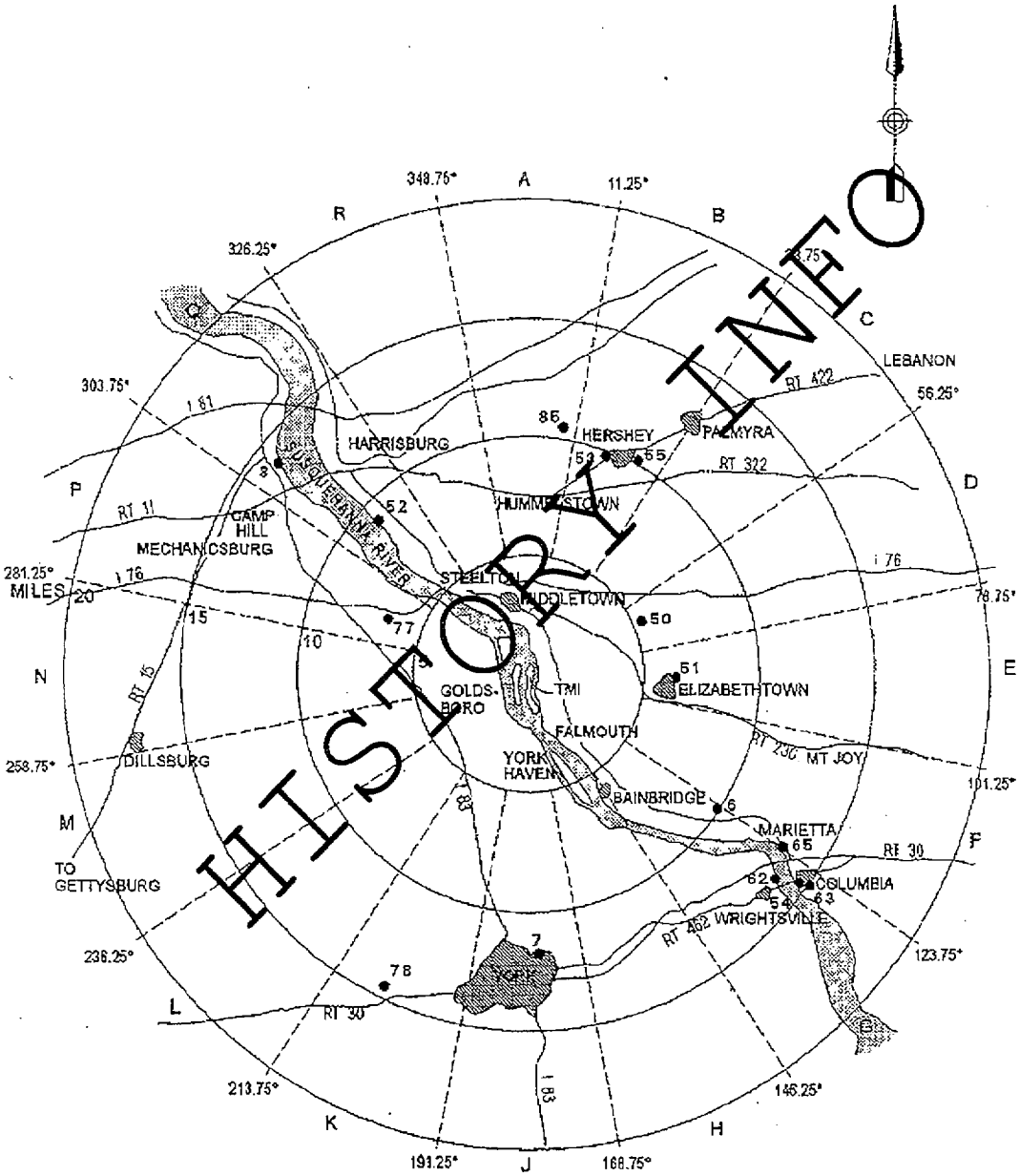

HISTORY INFO

9.0 PART III REFERENCES

1. EPRI NP-3840, RP 1560-3 Final Report, "Environmental Radiation Doses From Difficult-To-Measure Nuclides," January 1985

2. "Evaluation of the Three Mile Island Nuclear Station Unit 1 to Demonstrate Conformance to the Design Objectives of 10 CFR 50, Appendix I," Nuclear Safety Associates, May 1976

3. TMI-1 Final Safety Analysis Report (FSAR)

4. TMI-2 Final Safety Analysis Report (FSAR)

5. Meteorological Information and Dose Assessment System (MIDAS)

6. NUREG-0017, "Calculation of Releases of Radioactive Materials in Gaseous and Liquid Effluents from PWR," Revision 1, 1985

7. NUREG-0133, "Preparation of Radiological Effluent Technical Specifications for Nuclear Power Plants," October 1978

8. NUREG-0172, "Age-Specific Radiation Dose Commitment Factors For A One-Year Chronic Intake," November 1977

9. Regulatory Guide 1.21, "Measuring, Evaluating and Reporting Radioactivity in Solid Wastes and Releases of Radioactive Materials in Liquid and Gaseous Effluents from Light-Water Cooled Nuclear Power Plants," Revision 1, June 1974

10. Regulatory Guide 1.109, "Calculation of Annual Doses to Man from Routine Releases of Reactor Effluents for the Purpose of Evaluating Compliance with 10 CFR 50, Appendix I," Revision 1, October 1977

11. Simplified Environmental Effluent Dosimetry System (SEEDS)

12. TMI Recirculation Factor Memos, April 12, 1988 and March 17, 1988

13. TMI-1 Operations Procedure, 1101-2.1, "Radiation Monitor Set Points"

14. Title 10, Code of Federal Regulations, "Energy"

15. TMI-1 Technical Specifications, attached to Facility Operating License No. DPR-50

16. Regulatory Guide 1.111, "Methods for Estimating Atmospheric Transport and Dispersion of Gaseous Effluents in Routine Releases from Light-Water-Cooled Reactors," Revision 1, July 1977

17. TMI-2 PDMS Technical Specifications, attached to Facility License No. DPR-73

18. Radiological Assessment Branch Technical Position on Environmental Monitoring, Revision 1, November 1979

19. Title 40, Code of Federal Regulations, "Protection of Environment"

HISTORY INFO

20. Regulatory Guide 4.13, "Performance, Testing, and Procedural Specifications for Thermoluminescence Dosimetry: Environmental Applications," Revision 1, July 1977

21. Post-Defueling Monitored Storage Safety Analysis Report (PDMS SAR)

HISTORY INFO

HISTORY INFO

PART IV

REPORTING REQUIREMENTS

PART IV

Reporting Requirements

1.0 **TMI ANNUAL RADIOLOGICAL ENVIRONMENTAL OPERATING REPORT**[**]

1.1 Routine Radiological Environmental Operating Reports covering the operation of the unit during the previous calendar year shall be submitted to the Commission prior to May 1 of each year.

1.2 The Annual Radiological Environmental Operating Reports shall include summaries, interpretations, and an analysis of trends of the results of the radiological environmental monitoring activities for the report period, including a comparison with pre-operational studies, with operational controls as appropriate, and with previous environmental monitoring reports, and an assessment of the observed impacts of the plant operation on the environment. The reports shall also include the results of Land Use Censuses required by Part III, Section 8.2.

1.3 The Annual Radiological Environmental Operating Reports shall include the summarized tabulated results of analysis of all radiological environmental samples and environmental radiation measurements required by Part III Table 8.1 taken during the period pursuant to the locations specified in the tables and figures in this ODCM, as well as summarized and tabulated results of these analyses and measurements in a format similar to the table in the Radiological Assessment Branch Technical Position, Revision 1, November 1979. In the event that some individual results are not available for inclusion with the report, the report shall be submitted explaining the reasons for the missing results. The missing data shall be submitted as soon as possible in a supplementary report.

1.4 The reports shall also include the following: a summary description of the radiological environments monitoring program; a map(s) of all sampling locations keyed to a table giving distances and directions from a point that is midway between the Reactor Buildings of TMI-1 and TMI-2; the results of licensee participation in the Interlaboratory Comparison Program, required by Part III, Section 8.3; discussion of all deviations from the sampling schedule of Part III, Table 8.1; discussion of all the required analyses in which the LLD required by Part III, Table 8.3 was not achievable.

HISTORY INFO

[**]A single submittal may be made for the station.

2.0 TMI ANNUAL RADIOACTIVE EFFLUENT RELEASE REPORT

NOTE

A single submittal may be made for the station. The submittal should combine those sections that are common to both units at the station however, for units with separate radwaste systems, the submittal shall specify the release of radioactive material from each unit.

2.1 Routine Radioactive Effluent Release Reports covering the operations of the unit during the previous 12 months of operation shall be submitted prior to May 1 for TMI-1 and TMI-2.

2.2 The following information shall be included in both Radioactive Effluent Release Reports to be submitted each year:

The Radioactive Effluent Release Reports shall include a summary of the quantities of radioactive liquid and gaseous effluents and solid waste released from the unit as outlined in Reg. Guide 1.21, Rev. 1, with data summarized on a quarterly basis following the format of Appendix B thereof.

2.3 The Radioactive Effluent Release Reports shall include the following information for each type of solid waste shipped offsite during the report period:

a. container volume,

b. total curie quantity (specify whether determined by measurement or estimate),

c. principal radionuclides (specify whether determined by measurement or estimate),

d. type of waste (e.g., spent resin, compacted dry waste, evaporator bottoms),

e. type of shipment (e.g., LSA, Type A, Type B) and

f. solidification agent (e.g., cement).

2.4 The Radioactive Effluent Release Reports shall include a summary of unplanned releases from the site to unrestricted areas of radioactive materials in gaseous and liquid effluents made during the reporting period.

2.5 The Radioactive Effluent Release Reports shall include any changes made during the reporting period to the PROCESS CONTROL PROGRAM (PCP) documents and to the OFFSITE DOSE CALCULATION MANUAL (ODCM), as well as a listing of new locations for dose calculations and/or environmental monitoring identified by the land use census pursuant to Part III Section 8.2.

2.6 The Radioactive Effluent Release Reports shall include the instrumentation not returned to OPERABLE status within 30 days per ODCM Part I Controls 2.1.1b and 2.1.2b, and ODCM Part II Control 2.1.2b.

HISTORY INFO

2.7 The Radioactive Effluent Release Report to be submitted shall include an annual summary of hourly meteorological data collected over the previous year. This annual summary may be either in the form of an hour-by-hour listing of wind speed, wind direction, atmosphere stability, and precipitation (if measured) on magnetic tape, or in the form of joint frequency distribution of wind speed, wind direction, and atmospheric stability.

2.8 The Radioactive Effluent Release Report shall include an assessment of the radiation doses to MEMBERS OF THE PUBLIC due to the radioactive liquid and gaseous effluents released from the unit or station during the previous calendar year. The meteorological conditions concurrent with the time of release of radioactive materials in gaseous effluents (as determined by sampling frequency and measurement) shall be used for determining the gaseous pathway doses. The assessment of radiation doses shall be performed in accordance with this ODCM.

2.9 The Radioactive Effluent Release Report shall include an assessment of the radiation doses from radioactive liquid and gaseous effluents to MEMBERS OF THE PUBLIC due to their activities inside the SITE BOUNDARY during the report period, to verify compliance with the limits of 10CFR20.1301(a)(1). All assumptions used in making these assessments (i.e., specific activity, exposure time and location) shall be included in these reports.

2.10 The Radioactive Effluent Release Report shall also include an assessment of radiation doses to the likely most exposed real individual from reactor releases and other nearby uranium fuel cycle sources including doses from primary effluent pathways and direct radiation for the previous 12 consecutive months to show conformance with 40CFR 190 "Environmental Radiation Protection Standards for Nuclear Power Operation." Acceptable methods for calculating the dose contributions from liquid and gaseous effluents are given in Regulatory Guide 1.109, Rev. 1.

HISTORY INFO

3.0 PART IV REFERENCES

3.1 Radiological Assessment Branch Technical Position, Revision 1, November 1979

3.2 Regulatory Guide 1.21, "Measuring, Evaluating, and Reporting Radioactivity in Solid Wastes and Releases of Radioactive Materials in Liquid and Gaseous Effluents from Light-Water-Cooled Nuclear Power Plants," Revision 1, June 1974

3.3 TMI-1 Technical Specifications, attached to Facility Operating License No. DPR-50

3.4 Title 40, Code of Federal Regulations, "Protection of Environment"

3.5 Regulatory Guide 1.109, "Calculation of Annual Doses to Man from Routine Releases of Reactor Effluents for the Purpose of Evaluating Compliance with 10 CFR Part 50 Appendix I," Revision 1, October 1977

3.6 Title 10, Code of Federal Regulations, "Energy"

3.7 Regulatory Guide 1.111, "Methods of Estimating Atmospheric Transport and Dispersion of Gaseous Effluents in Routine Releases from Light-Water-Cooled Reactors," Revision 1, July 1977

3.8 Regulatory Guide 1.112, "Calculation of Releases of Radioactive Materials in Gaseous and Liquid Effluents from Light-Water-Cooled Power Reactors," Revision O-R, April 1976

3.9 Regulatory Guide 1.113, "Estimating Aquatic Dispersion of Effluents from Accidental and Routine Reactor Releases for the Purpose of Implementing Appendix I," Revision 1, April 1977

HISTORY INFO

APPENDIX A

P_i - Pathway Dose Rate Parameter

P_i (inhalation) = k' (BR) DFA_i (Eq A-1)

Where:

P_i = the pathway dose rate parameter for radionuclide, i, (other than noble gases) for the inhalation pathway, in mrem/yr per microcurie/m^3. The dose factors are based on the critical individual organ for the child age group.

k' = conversion factor, 1E6 pCi/microcurie

BR = 3700 m^3/yr, breathing rate for child (Reg. Guide 1.109, Rev. 1, Table E-5)

DFA_i = the maximum organ inhalation dose factor for the infant age group for the ith radionuclide (mRem/pCi). Values are taken from Table E-10, Reg. Guide 1.109 (Rev. 1), or NUREG-0172.

Resolution of the units yields: (ODCM Part III Table 4.6)

P_i (inhalation) = 3.7E9 DFA_i (mrem/yr per μCi/m^3) (Eq A-2)

NOTE

The latest NRC Guidance has deleted the requirement to determine P_i (ground plane) and P_i (food). In addition, the critical age group has been changed from infant to child.

HISTORY INFO

APPENDIX B

Ri - Inhalation Pathway Dose Factor

$R_i = k' (BR) (DFA_{i,a,o})$ (mrem/yr per microcurie/m^3) (Eq B-1)

Where:

k' = conversion factor, 1E6 pCi/microcurie

BR = breathing rate, 1400, 3700, 8000, 8000 m^3/yr for infant, child, teenager, and adult age groups, respectively. (Reg. Guide 1.109, Rev. 1, Table E-5)

$DFA_{i,a,o}$ = the inhalation dose factor for organ, o, of the receptor of a given age group, a, and for the ith radionuclide, in mrem/pCi. The total body is considered as an organ in the selection of $DFA_{i,a,o}$. Values are taken from Tables E-7 through E-10, Reg. Guide 1.109 (Rev. 1), or NUREG 0172.

Resolutions of the units yields:

Ri = (1.4E9) ($DFA_{i,a,o}$) infant (ODCM Part III Table 5.2.1)

Ri = (3.7E9) ($DFA_{i,a,o}$) child (ODCM Part III Table 5.2.2)

Ri = (8.0E9) ($DFA_{i,a,o}$) teen and adult (ODCM Part III Tables 5.2.3 and 5.2.4)

HISTORY INFO

APPENDIX C

Ri - Ground Plane Pathway Dose Factor

$$R_i = k' \, k'' \, (SF) \, (DFG_i) \, [(1-e^{-\lambda_i t})/\lambda_i] \qquad \text{(Eq C-1)}$$

Where:

k' = conversion factor, 1E6 pCi/microcurie

k" = conversion factor, 8760 hr/yr

λ_i = decay constant for the ith radionuclide, sec^{-1}

t = the exposure time (this calculation assumes that decay is the only operating removal mechanism) 4.73×10^8 sec. (15 yrs), Reg. Guide 1.109 (Rev. 1), Appendix C

DFG_i = the ground plane dose conversion factor for the ith radionuclide (mrem/hr per pCi/m^2). Values are taken from Table E-6, Reg. Guide 1.109 (Rev. 1), or NUREG-0172. These values apply to all age groups.

SF = 0.7, shielding factor, from Table E-15 Reg. Guide 1.109 (Rev. 1)

Reference ODCM Part III Table 5.3.1

HISTORY INFO

APPENDIX D

RI - Grass Cow-Milk Pathway Dose Factor

$$R_i = k' [(Q_F \times U_{AP}) / (\lambda_i + \lambda_w)] \times (F_m) \times (r) \times (DFL_{i,a,o}) \times [((f_p \times f_s)/Y_p) + ((1-f_p \times f_s)\, e^{-\lambda_i t_h})/Y_s]\, e^{-\lambda_i t_f} \quad \text{(Eq D-1)}$$

Where:

k' = conversion factor, 1E6 picocurie/microcurie (pCi/µci)

Q_F = cow consumption rate, 50 kg/day, (Reg. Guide 1.109, Rev. 1)
goat consumption rate, 6 kg/day, (Reg. Guide 1.109, Rev. 1, Table E-2)

U_{AP} = Receptor's milk consumption rate; 330, 330, 400, 310 liters/yr for infant, child, teenager, and adult age groups, respectively (Reg. Guide 1.109, Rev. 1)

Y_P = agricultural productivity by unit area of pasture feed grass, 0.7 kg/m^2 (NUREG-0133)

Y_s = agricultural productivity by unit area of stored feed, 2.0 kg/m^2 (NUREG-0133)

F_m = stable element transfer coefficient (Table E-1, Reg. Guide 1.109, Rev. 1)

r = fraction of deposited activity retained in cow's feed grass, 0.2 for particulates, 1.0 for radioiodine (Table E-15, Reg. Guide 1.109, Rev. 1)

$DFL_{i,a,o}$ = the ingestion dose factor for organ, o, and the ith radionuclide for each respective age group, a (Tables E-11 to E-14, Reg. Guide 1.109, Rev. 1), or NUREG 0172.

λ_i = decay constant for the ith radionuclide, sec^{-1}

λ_w = decay constant for weathering, 5.73×10^{-7} sec^{-1} (NUREG-0133); based on a 14 day half life

t_f = 1.73×10^5 sec, the transport time from pasture to cow to milk to receptor (Table E-15, Reg. Guide 1.109, Rev. 1), or 2 days

t_h = 7.78×10^6 sec, the transport time from pasture to harvest to cow to milk to receptor (Table E-15, Reg. Guide 1.109, Rev. 1), or 90 days

f_p = 1.0, the fraction of the year that the cow is on pasture

f_s = 1.0, the fraction of the cow feed that is pasture grass while the cow is on pasture

HISTORY INFO

APPENDIX D

The concentration of tritium in milk is based on the airborne concentration rather than the deposition. Therefore, R_i is based on (X/Q):

$$R^{c}_{t,a,o} = k'k''' F_m Q_F U_{AP} DFL_{t,a,o} (.75 [.5/H]) \quad \text{(Eq D-2)}$$

Where:

- k''' = 1E3 grams/kg
- H = 8 grams/m^3, absolute humidity of the atmosphere
- .75 = fraction of the total feed grass mass that is water
- .5 = ratio of the specific activity of the feed grass water to the atmospheric water (NUREG-0133)
- $DFL_{t,a,o}$ = the ingestion dose factor for tritium and organ, o, for each respective age group, a (Tables E-11 to E-14, Reg. Guide 1.109, Rev. 1), or NUREG 0172.

All other parameters and values are as given above.

NOTE

Goat-milk pathway factor, R_i, will be computed using the cow-milk pathway factor equation. F_m factor for goat-milk will be from Table E-2 Reg. Guide 1.109, Rev. 1.

Reference: ODCM Part III Tables 5.4.1 to 5.4.4

HISTORY INFO

APPENDIX E

Ri - Cow-Meat Pathway Dose Factor

$$R_i = k' [(Q_F \times U_{AP}) / (\lambda_i + \lambda_w)] \times (F_f) \times (r) \times (DFL_{i,a,o}) \times [((f_p \times f_s)/Y_p) + ((1-f_p f_s)\, e^{-\lambda_i t_h})/Y_s] \times e^{-\lambda_i t_f} \quad \text{(Eq E-1)}$$

Where:

k' = conversion factor, 1E6 picocurie/microcurie (pCi/µci)

Q_F = cow consumption rate, 50 kg/day, (Reg. Guide 1.109, Rev. 1)

U_{AP} = Receptor's meat consumption rate; 0, 41, 65, 110 kg/yr for infant, child, teenager, and adult age groups, respectively (Reg. Guide 1.109, Rev. 1)

F_f = the stable element transfer coefficients, days/kg (Table E-1, Reg. Guide 1.109, Rev. 1)

r = fraction of deposited activity retained in cow's feed grass, 0.2 for particulates, 1.0 for radioiodine (Table E-15, Reg. Guide 1.109, Rev. 1)

$DFL_{i,a,o}$ = the ingestion dose factor for organ, o, and the ith radionuclide for each respective age group, a (Tables E-11 to E-14, Reg. Guide 1.109, Rev. 1), or NUREG 0172.

λ_i = decay constant for the radionuclide i, sec^{-1}

λ_w = decay constant for weathering, 5.73×10^{-7} sec^{-1} (NUREG-0133), based on a 14 day half life

t_f = 1.73×10^6 sec, the transport time from pasture to receptor (NUREG-0133)

t_h = 7.78×10^6 sec, the transport time from crop to receptor (NUREG-0133)

Y_P = agricultural productivity by unit area of pasture feed grass, 0.7 kg/m^2 (NUREG-0133)

Y_s = agricultural productivity by unit area of stored feed, 2.0 kg/m^2 (NUREG-0133)

f_p = 1.0, the fraction of the year that the cow is on pasture

f_s = 1.0, the fraction of the cow feed that is pasture grass while the cow is on pasture

The concentration of tritium in meat is based on the airborne concentration rather than the deposition. Therefore, R_i is based on (X/Q):

$$R_{t,a,o} = k'k''' F_f Q_F U_{AP} (DFL_{t,a,o}) \times 0.75 \times (0.5/H]) \quad \text{(Eq E-2)}$$

Where:

All terms are as defined above and in Appendix D.

Reference: ODCM Part III, Tables 5.6.1 to 5.6.4

HISTORY INFO

APPENDIX F

Ri - Vegetation Pathway Dose Factor

$$R_i = k' \times [r/(Y_v(\lambda_i + \lambda_w))] \times (DFL_{i,a,o}) \times [(U^L_A) f_L e^{-\lambda_i t_L} + U^S_A f_g e^{-\lambda_i t_h}] \quad \text{(Eq F-1)}$$

Where:

k' = 1E6 picocurie/microcurie (pCi/µci)

U^L_A = the consumption rate of fresh leafy vegetation, 0, 26, 42, 64 kg/yr for infant, child, teenager, or adult age groups, respectively (Reg. Guide 1.109, Rev. 1)

U^S_A = the consumption rate of stored vegetation, 0, 520, 630, 520 kg/yr for infant, child, teenager, or adult age groups respectively (Reg. Guide 1.109, Rev. 1)

f_L = the fraction of the annual intake of fresh leafy vegetation grown locally, = 1.0 (NUREG-0133)

f_g = the fraction of the stored vegetation grown locally = 0.76 (NUREG-0133)

t_L = the average time between harvest of leafy vegetation and its consumption, 8.6×10^4 seconds [Table E-15, Reg. Guide 1.109, Rev. 1 (24 hrs)]

t_h = the average time between harvest of stored leafy vegetation and its consumption, 5.18×10^6 seconds, [Table E-15, Reg. Guide 1.109, Rev. 1 (60 days)]

y_v = the vegetation area density, 2.0 kg/m^2 (Table E-15, Reg. Guide 1.109, Rev. 1)

All other parameters are as previously defined.

The concentration of tritium in vegetation is based on the airborne concentration rather than the deposition. Therefore, R_i is based on (X/Q)

$$R_{t,a,o} = k'k''' [U^L_A f_L + U^S_A f_g] (DFL_{t,a,o}) (.75 [.5/H]) \quad \text{(Eq F-2)}$$

Where:

All terms are as defined above and in Appendix D.

Reference: ODCM Part III, Tables 5.7.1 to 5.7.4

HISTORY INFO

APPENDIX A-F REFERENCES

(Page 1 of 4)

Parameters Used in Dose Factor Calculations

Parameter	Value	Origin of Value		
		Table in R.G. 1.109	Section of NUREG-0133	Site-Specific
	*** For P_i ***			
DFA_i	Each radionuclide	E-9		Note 1
BR	3700 m^3/yr (child)	E-5		
	For Ri (Vegetation)			
r	Each element type	E-1		
Y_v	2.0 kg/m^2	E-15		
λw	5.73 E-7 sec^1		5.3.1.3	
DFL_i	Each age group and radionuclide	E-11 thru E-14		Note 1
U_a^L	Each age group	E-5		
f_L	1.0		5.3.1.5	
t_L	8.6 E + 4 seconds	E-15		
U_a^S	Each age group	E-5		
f_g	0.76		5.3.1.5	
t_h	5.18 E + 6 seconds	E-15		
H	8.0 grams/kg		5.2.1.3	
	For Ri (Inhalation)			
BR	Each age group	E-5		
DFA_i	Each age group and nuclide	E-7 thru E-10		Note 1

HISTORY INFO

APPENDIX A-F REFERENCES

(Page 2 of 4)

Parameters Used in Dose Factor Calculations

Parameter	Value	Origin of Value		
		Table in R.G. 1.109	Section of NUREG-0133	Site-Specific
	*** For R_i (Ground Plane) ***			
SF	0.7	E-15		
DFG_i	Each radionuclide	E-6		
t	4.73 E + 8 sec		5.3.1.2	
	*** For Ri (Grass/Animal/Meat) ***			
Q_F(Cow)	50 kg/day	E-3		
Q_F (Goat)	6 kg/day	E-3		Ref. Only
U_{ap}	Each age group	E-5		
λw	5.73 E-7 sec^1		5.3.1.3	
F_f (Both)	Each element	E-1		
r	Each element type	E-15		
DFL_i	Each age group and nuclide	E-11 thru E-14		Note 1
f_p	1.0		5.3.1.3	Note 2
f_s	1.0		5.3.1.3	Note 2
Y_p	0.7 kg/m^3	E-15		
t_h	7.78 E + 6 sec	E-15		
Y_s	2.0 kg/m^2	E-15		
t_f	1.73 E + 6 sec	E-15		
H	8.0 grams/kg		5.2.1.3	

HISTORY INFO

APPENDIX A-F REFERENCES

(Page 3 of 4)

Parameters Used in Dose Factor Calculations

Parameter	Value	Origin of Value		
		Table in R.G. 1.109	Section of NUREG-0133	Site-Specific
	*** For R_i (Grass/Cow/Milk) ***			
Q_f	50 kg/day	E-3		
U_{ap}	Each age group	E-5		
λw	5.73 E-7 sec[1]		5.3.1.3	
F_m	Each element	E-1		
r	Each element type	E-15		
DFL_1	Each age group and nuclide	E-11 thru E-14		Note 1
Y_p	0.7 kg/m^2	E-15		
t_h	7.78 E + 6 sec	E-15		
Y_s	2.0 kg/m^2	E-15		
t_f	1.73 E + 5 sec	E-15		
f_p	1.0		5.3.1.3	
f_s	1.0		5.3.1.3	
H	8.0 grams/kg		5.2.1.3	

HISTORY INFO

APPENDIX A-F REFERENCES

(Page 4 of 4)

NOTES

1. Inhalation and ingestion dose factors were taken from the indicated source. For each age group, for each nuclide, the organ dose factor used was the highest dose factor for that nuclide and age group in the referenced table.

2. Typically beef cattle are raised all year on pasture. Annual land surveys have indicated that the small number of goats raised within 5 miles typically are used for grass control and not food or milk. Nevertheless, the goats can be treated as full meat sources where present, despite the fact that their numbers cannot sustain the meat consumption rates of Table E-5, NUREG-0133.

REFERENCES

1. Regulatory Guide 1.109, "Calculation of Annual Doses to Man from Routine Releases of Reactor Effluents for the Purpose of Evaluating Compliance with 10 CFR Part 50, Appendix I," Revision 1, October 1977.

2. TMI-1 Technical Specifications, attached to Facility Operating License No. DPR-50.

3. NUREG-0133, "Preparation of Radiological Effluent Technical Specifications for Nuclear Power Plants," October 1978.

HISTORY INFO

Enclosure 2
2000 Annual Radioactive Effluent Releases Report for TMI
5928-01-20113

Procedure Change Request PCR-00-1448 to the ODCM, 6610-PLN-4200.01

FIGURE 1
Typical

Due Date: 10/27/00 PCR No. PCR 00-1448

THREE MILE ISLAND UNIT ONE
PROCEDURE CHANGE REQUEST (PCR)

Refer to instructions and guidelines in AP 1001A when completing this form.

1. 6610-PLN-4200.01 (Procedure Number) 19 (Present Rev. No.) Offsite Dose Calculation Manual (ODCM) (Title)

2. Recommended Change:
- Include page numbers, paragraph numbers, and exact wording of recommended change.
- Attach additional sheets if necessary.

In Table 8.8, add Station KIS-3 and delete Station KIS-2. The particulars on Station KIS-3 are 14.5 miles, 205° and map #78 (pg 177.0). A revised map is attached (pg 181.0) (Changes are in red on the attached sheets)

3. Reason for Change
- Is this change part of the Biennial Procedure Review? ..... Yes ____ No X
- Include I&E Bulletins, TSCR #, T. S. Amendment #, Modification #, CAP #, etc.

A new control milk station is being added to the REMP because the farmer at Station KIS-2 (the one listed in the ODCM) is ceasing dairy operations.

4. (a) Does Revision replace a TCN? ..... Yes ____ No X
(b) If "yes", indicate the TCN Number, if available

5. Is procedure within QA Plan Scope? ..... Yes X No ____

6. Prepared By: Timothy A. Bradley / Timothy A. Bradley Date 10/3/00

Review Signatures:

7. Procedure Owner Concurrence B A Parfitt PARFITT Date 10/3/00

8. Responsible Technical Reviewer Concurrence B A Parfitt Date 10/3/00

9. Independent Safety Review N/R [illegible] Date 10/10/00

10. Approval Signature(s): (Per AP 1001A)
Jim Fetter (Signature) 10/10/00 (Date)

11. Change Entered 11/15/2000 (Date) 20 (Rev. No.)

HISTORY INFO

FIGURE 4
Typical

THREE MILE ISLAND SAFETY DETERMINATION

This determination is required for all documents within 1001A applicability/scope.

☐ New Procedure ___-___-___
☒ PCR PCR-00-1448

☐ PARTIAL
☐ TCN ___-___-___
☐ STP ___-___-___

Document No. 6610-PLN-4200.61	Rev. No. 19 (current)

1. Is this a substantive change? Indicate "YES" for new procedures and STP's — Yes X No ___

   If Box 1 is "No", sign and date this form. The remainder of the form need not be completed.

2. Does this change involve any non-radiological environmental impact? (Refer to Definitions Section of this procedure.) — Yes ___ No X

   - If "Yes", complete an Environmental Determination (Figure 7, AP 1001A) and ensure the change is submitted to Environmental Affairs for review.
   - Complete the remainder of this form.

3. Does this change have the potential to adversely affect nuclear safety or safe plant operations? (Refer to Paragraph 4.2.2) — Yes ___ No X
4. Does this make changes in the facility as described in the safety analysis report? — Yes ___ No X
5. Does this make changes in the procedures as described in the safety analysis report? — Yes ___ No X
6. Are tests or experiments conducted which are not described in the safety analysis report? — Yes ___ No X
7. Does this change conflict with the requirements of the plant Technical Specifications? — Yes ___ No X

   If ANY of the answers to 3, 4, 5, 6 OR 7 are YES, you must fill out Figure 5 AND provide a written safety evaluation. Sign and date this form.

If the answers to 3, 4, 5, 6 AND 7 are ALL NO, this precludes the existence of an Unreviewed Safety Question or Technical Specification change.
Provide the basis for the answers to each of the questions (3, 4, 5, 6, 7) on one or more separate sheets.
Sign and date this form.

Prepared By: Timothy A. Bradley / Timothy A. Bradley — Date: 10/3/00
RTR By: B A Parfitt — Date: 10/3/00

HISTORY INFO

Safety Determination for 6610-PLN-4200.01, Rev 20 (Proposed)

3. Does this change have the potential to adversely affect nuclear safety or safe plant operations?

No. As required by Part III, Section 8.1.3.c of the Offsite Dose Calculation Manual, ODCM, (6610-PLN-4200.01), control milk sampling station K15-3 is being added to and control milk sampling station K15-2 is being deleted from the Radiological Environmental Monitoring Program (REMP) and Table 8.8 and Map 8.3 of the ODCM. These changes are necessary because milk samples are no longer available from control milk station K15-2. The farmer at this station is ceasing dairy operations. Station K15-3 is a suitable control station because it is located greater than 10 miles from TMINS and located in a non-prevalent wind direction.

The proposed changes (of adding and deleting a control milk sampling station to the REMP and Table 8.8 and Map 8.3 of the ODCM) do not impact/affect plant systems or components that are important to safe plant operations.

4. Does this make changes in the facility as described in the safety analysis report?

No. Changes are proposed to the REMP and a table and map of the ODCM. The proposed changes do not make any changes to the facility.

5. Does this make changes in the procedures as described in the safety analysis report?

No. Changes are proposed to a procedure that specifies how the REMP is to be conducted. The proposed changes do not make any changes in the procedures as described in the safety analysis report.

6. Are tests or experiments conducted which are <u>not</u> described in the in the safety analysis report?

No tests or experiments are performed.

7. Does this change conflict with the requirements of the plant technical specifications?

No. The proposed changes are being made in accordance with the requirements of the ODCM and, therefore, do not conflict with the USNRC requirements (i.e. REMP samples will continue to be collected and analyzed as required by the USNRC).

HISTORY INFO

TABLE 8.8

TMINS REMP Station Locations-Milk

Station Code	Distance (miles)	Azimuth (°)	Map No.
D2-1	1.1	65	72
E2-2	1.1	93	73
G2-1	1.4	125	74
P7-1	6.7	293	77
~~K15-2~~	~~12.8~~	~~298~~	~~78~~
K15-3	14.5	205	78

TABLE 8.9

TMINS REMP Station Locations-Fish

Station Code	Station Location
IND	Downstream of Station Discharge
BKG	Upstream of Station Discharge

HISTORY INFO

MAP 8.3
THREE MILE ISLAND NUCLEAR STATION
LOCATIONS OF RADIOLOGICAL ENVIRONMENTAL MONITORING PROGRAM
STATIONS GREATER THAN 5 MILES FROM THE SITE

Revised map attached

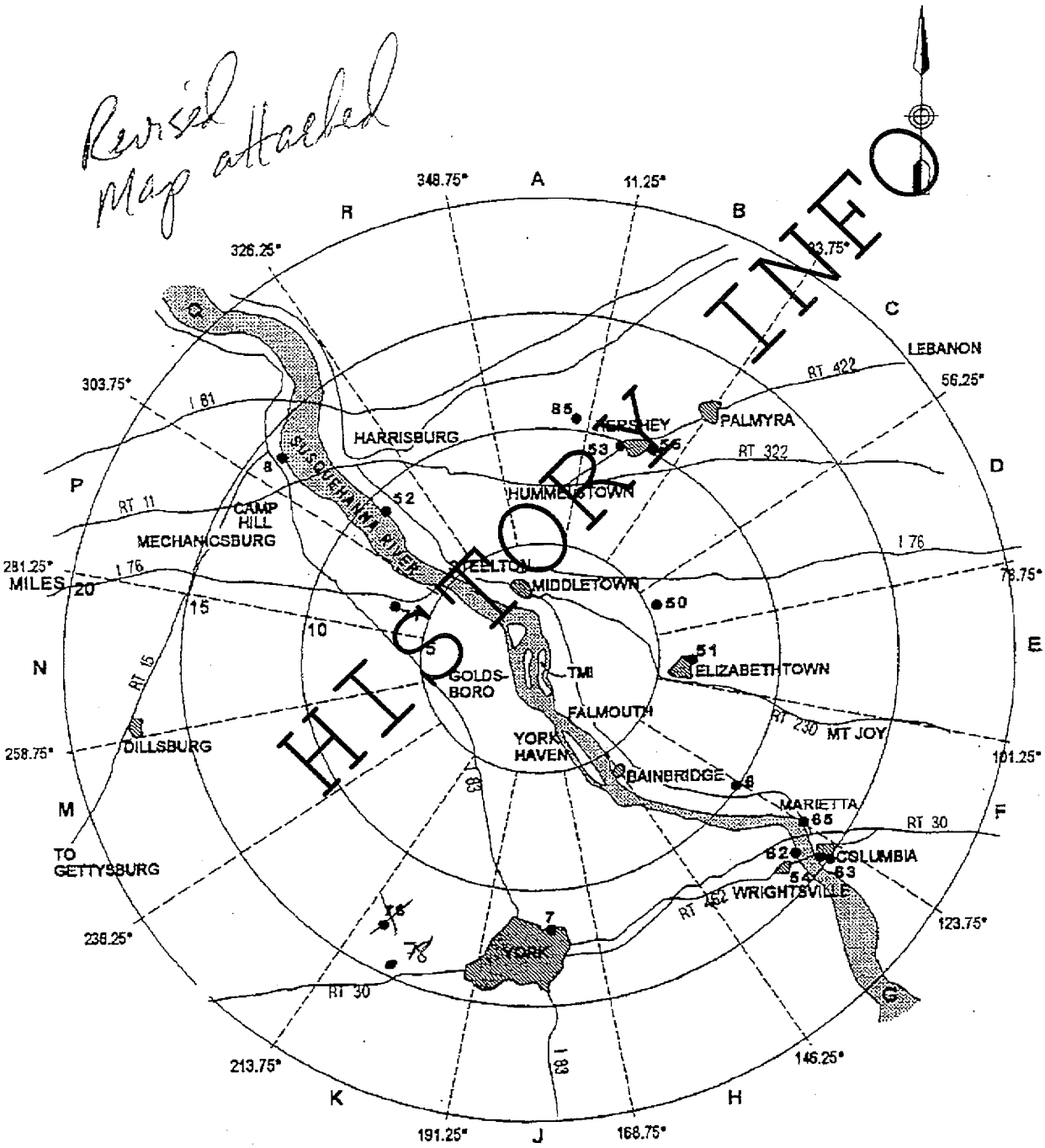

HISTORY INFO

R013001.Pex

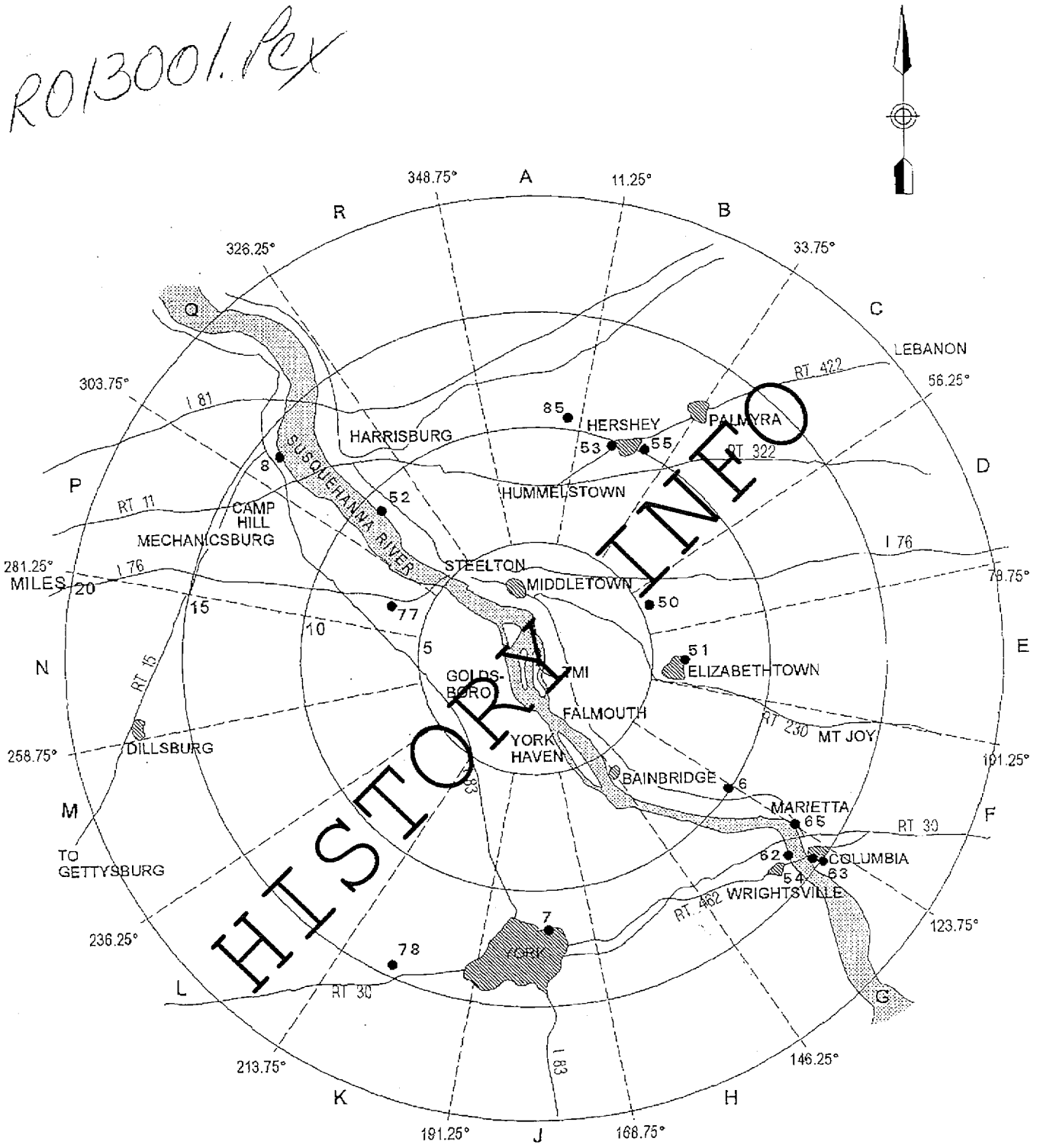
348.75°
A
11.25°
R
B
326.25°
33.75°
Q
C
LEBANON
RT 422
56.25°
303.75°
I 81
85
HERSHEY
PALMYRA
HARRISBURG
53
55
RT 322
8
SUSQUEHANNA RIVER
D
P
52
HUMMELSTOWN
RT 11
CAMP HILL
MECHANICSBURG
I 76
281.25°
MILES
20
I 76
STEELTON
MIDDLETOWN
78.75°
15
77
50
10
5
51
E
N
RT 15
GOLDS-BORO
7MI
ELIZABETHTOWN
FALMOUTH
RT 230
MT JOY
258.75°
DILLSBURG
YORK HAVEN
101.25°
BAINBRIDGE
6
I 83
M
MARIETTA
65
F
RT 30
TO GETTYSBURG
62
COLUMBIA
54
63
WRIGHTSVILLE
RT 462
7
123.75°
236.25°
78
YORK
L
RT 30
G
213.75°
I 83
146.25°
K
H
191.25°
J
168.75°
HISTORY INFO