TABLE OF CONTENTS

Section	Title	Page
1.0	INTRODUCTION AND SUMMARY	1-1
1.1	Site and Environment	1.1-1
1.2	Summary Description	1.2-1
1.2.1	Structures	1.2-2
	Seismic Classification of Particular Structures and Equipment	1.2-2
1.2.2	Nuclear Steam Supply System	1.2-2
1.2.3	Control System	1.2-3
1.2.4	Waste Disposal System	1.2-4
1.2.5	Fuel Handling System	1.2-4
1.2.6	Turbine and Auxiliaries	1.2-5
1.2.7	Electrical System	1.2-5
1.2.8	Engineered Safety Features	1.2-6
1.2.9	Fire Protection System	1.2-7
1.3	General Design Criteria	1.3-1
1.3.1	Overall Requirements	1.3-1
1.3.2	Protection by Multiple Fission Product Barriers	1.3-3
1.3.3	Nuclear and Radiation Controls	1.3-6
1.3.4	Reliability and Testability of Protection Systems	1.3-9
1.3.5	Reactivity Control	1.3-12
1.3.6	Reactor Coolant Pressure Boundary	1.3-14
1.3.7	Engineered Safety Features	1.3-17
1.3.8	Fuel and Waste Storage Systems	1.3-26
1.3.9	Effluents	1.3-28
1.4	Design Parameters and Unit Comparison	1.4-1
1.4.1	Design Developments Since Receipt of Construction Permit	1.4-1
	Burnable Poison Rods	1.4-1
	Safety Injection System	1.4-1
	Containment Sumps	1.4-2
	Emergency Containment Filtering System	1.4-2
	Safety Injection System Trip Signal	1.4-2

TABLE OF CONTENTS
(Continued)

Section	Title	Page
1.4.1 (Cont'd)	Containment Spray System Signal	1.4-3
	Rod Stop and Reactor Trip on Startup	1.4-3
	Isolation of the Control and Protection Systems	1.4-3
	Electrical System Design	1.4.4
	Auxiliary Coolant System	1.4-5
	Waste Disposal System	1.4-5
	Thermal Power Uprate	1.4-5
1.5	Design Highlights	1.5-1
1.5.1	Power Level	1.5-1
1.5.2	Reactor Coolant Loops	1.5-1
1.5.3	Peak Specific Power	1.5-1
1.5.4	Fuel Assembly Design	1.5-2
1.5.5	Engineered Safety Features	1.5-2
1.5.6	Emergency Power	1.5-2
1.5.7	Emergency Containment Cooling and Filtering Systems	1.5-3
1.5.8	References	1.5-3
1.6	Research and Development Items	1.6-1
1.6.1	Initial Core Design	1.6-1
1.6.2	Development of Analytical Methods for Reactivity Transients from Rod Ejection Accidents	1.6-1
1.6.3	Safety Injection System Design	1.6-3
1.6.4	Systems for Reactor Control During Xenon Instabilities	1.6-4
1.6.5	Blowdown Capability of Reactor Internals	1.6-5
1.7	Identification of Contractors	1.7-1
1.8	Safety Conclusions	1.8-1
1.9	Quality Assurance Program	1.9-1
1.9.1	Purpose	1.9-1
1.9.2	Applicability	1.9-1
1.9.3	Organization	
1.9.4	Scope	1.9-7
1.9.5	Design and Procurement	1.9-8
1.9.6	Shop Fabrication Quality Assurance	1.9-9
1.9.7	On-Site Construction, Erection, and Installation	1.9-10

APPENDICES

Appendix 1A Westinghouse Power Systems Division Quality Assurance Plan

Appendix 1B Quality Assurance Package for Concrete

LIST OF TABLES

Table	Title
1.4-1	Comparison of Design Parameters

LIST OF FIGURES

Figure	Title
1.2-1	General Building Arrangement Plan
1.2-2	General Arrangement Plan EL 10'- 0" and Below
1.2-3	General Arrangement Ground Floor Plan EL. 18'- 0"
1.2-4	General Arrangement Operating Floor Plan EL. 42'- 0" and EL. 58'- 0"
1.2-5	General Arrangement Mezzanine Floor Plan and Section "A-A"
1.2-6	General Arrangement Sections "B-B" and "C-C"
1.2-7	General Arrangement Sections "D-D" and "E-E"
1.2-8	General Arrangement Unit 4 EDG Building Plan and Sections
1.9-1	Quality Assurance Organization - Florida Power & Light
1.9-2	Quality Assurance Organization - Bechtel
1.9-3	Quality Assurance Organization - Westinghouse

1.0 INTRODUCTION AND SUMMARY

This Final Safety Analysis Report is submitted in support of an application by Florida Power & Light Company for a license to operate two nuclear power units designated as Turkey Point Units 3 and 4, located adjacent to oil and gas fired Units 1 and 2 at the Turkey Point Plant, a steam electric generating facility situated on the shore of Biscayne Bay about 25 miles south of Miami, Florida.

The Turkey Point Units 3 and 4 reactors are pressurized light water moderated and cooled systems. Each is designed to produce initially 2200 MWt, and is capable of an uprated output of 2300 MWt. Each steam and power conversion system, including its turbine generator, is designed to permit generation of 760 Mw of gross electrical power, with a corresponding uprated gross electrical output of approximately 795Mw.

The nuclear power units incorporate a closed-cycle pressurized water Nuclear Steam Supply System and a Turbine-Generator System utilizing dry saturated steam. Equipment includes the Radioactive Waste Disposal System, Fuel Handling System, main transformers, main condenser and all auxiliaries, structures, and other on-site facilities required to provide complete and operable nuclear power units.

The nuclear safety systems, including containment and engineered safety features, are designed and evaluated for operation at the higher power level, which is used in the analysis of postulated loss-of-coolant accidents in this report.

The balance of this section summarizes the principal design features and safety criteria of the nuclear units, and compares them with some other pressurized water nuclear power plants employing the same technology and basic engineering features.

Section 2 contains a description and evaluation of the Turkey Point site and environs, supporting the suitability of the site for reactors of the size and type described. Sections 3 and 4 describe the reactors and the reactor coolant systems, Section 5 the structures and related systems, and Section 6 through 11 the emergency and other auxiliary systems.

Section 12 makes reference to the Company's program for organization and training of personnel. Section 13 contains an outline and reference to the initial tests and operations associated with startup.

Section 14 is a safety evaluation summarizing the analyses which demonstrate the adequacy of the reactor protection systems, and the engineered safety features. The consequences of various postulated accidents are within the guidelines set forth in 10 CFR 100.

Section 15 makes reference to the Technical Specifications under which the units are operated.

1.1 SITE AND ENVIRONMENT

The site is on the shore of Biscayne Bay, about 25 miles south of Miami, Florida. The area immediately surrounding the site is low and swampy and is very sparsely populated, with much of it unsuited for development without raising the elevation with fill. The nearest farming area lies in the northwest quarter of a 5-mile arc from the site.

The area surrounding the site is flat and slopes very gently to the west from sea level at the shoreline of Biscayne Bay to an elevation of about 10 ft above MSL at a point some 8 to 10 miles inland. To the east across Biscayne Bay from 5 to 8 miles, is a series of offshore islands running in a northeast-southwest direction between the Bay and the Atlantic Ocean, the largest of which is
Elliott Key.

The site is well ventilated with air movement prevailing almost 100 per cent of the time. The atmosphere in the area is generally unstable with diurnal inversions of short duration.

The Miami area has experienced winds of hurricane force periodically. During storms the plant may be subjected to flood tides of varying heights. Hurricane "Betsy" in 1965 produced the maximum flooding recorded, which was about 10 feet above MSL. External flood protection is described in Appendix 5G.

The normal direction of natural drainage of surface and ground water in the area of the site is to the east and south toward Biscayne Bay and will not affect
off-site wells. A radiological background study of the Turkey Point

area will be initiated approximately one year prior to initial startup of the Unit 3. This will involve the collection of samples of air, soil, water, marine life, biota and vegetation in the area. The bed rock beneath the limerock fill is competent with respect to foundation conditions for the nuclear units. The area is in a seismologically quiet region, all of Florida being classified Zone 0 (the zone of least probability of damage) by the Uniform Building Code, as published by International Conference of Building Officials.

1.2 SUMMARY DESCRIPTION

The inherent design of the pressurized water, closed-cycle reactor significantly reduces the quantities of fission products which must release to the atmosphere. Four barriers exist between the fission product accumulation and the environment. These are the uranium dioxide fuel matrix, the fuel cladding, the reactor vessel and coolant loops, and the containment. The consequences of a breach of the fuel cladding are greatly reduced by the ability of the uranium dioxide lattice to retain fission products. Escape of fission products through a fuel cladding defect would be contained within the pressure vessel, loops and auxiliary systems. Breach of these systems or equipment would release the fission products to the containment where they would be retained. The containment is designed to retain adequately these fission products under the accident conditions analyzed in Section 14.

Several engineered safety features have been incorporated into the design to reduce the consequences of a loss of coolant incident. These safety features include a Safety Injection System. This system automatically delivers borated water to the reactor vessel for core cooling under high and low reactor coolant pressure conditions. The Safety Injection System also serves to insert negative reactivity into the core in the form of borated water during an uncontrolled cooldown following a steam line break or an accidental steam release. Other safety features which have been included in the containment design are an Emergency Containment Cooling System which would effect a rapid depressurization of the containment following a loss of coolant and an Emergency Containment Filtering System which would remove elemental iodine from the atmosphere by absorption and a Containment Spray System which would also depressurize the containment. The Emergency Containment Cooling System provides backup cooling for the Containment Spray System.

1.2.1 STRUCTURES

The major structures are two Containments, one Auxiliary Building, two Turbine Buildings and one Control Building. A general plan of the building arrangements is shown on Figure 1.2-1. Figures 1.2-2 through 1.2-7 show the general internal layout and equipment locations within the buildings.

Each containment is a right vertical, post-tensioned reinforced concrete cylinder with pre-stressed tendons in the vertical wall, a reinforced and post-tensioned concrete hemispherical domed roof and a substantial base slab of reinforced concrete. The containment is designed to withstand environmental effects and the internal pressure and temperature accompanying a loss-of-coolant accident. It also provides adequate radiation shielding for both normal operation and accident conditions

<u>Seismic Classification of Particular Structures and Equipment</u>

Particular structures and equipment are classified according to seismic design. The definition of seismic classifications is given in Appendix 5A.

1.2.2 NUCLEAR STEAM SUPPLY SYSTEM

Each Nuclear Steam Supply System consists of a pressurized water reactor, Reactor Coolant System, and associated auxiliary fluid systems. The Reactor Coolant System is arranged as three closed reactor coolant loops connected in parallel to the reactor vessel, each loop containing a reactor coolant pump and a steam generator. An electrically heated pressurizer is connected to one of the loops.

The reactor core is composed of uranium dioxide pellets enclosed in Zircaloy tubes with welded end plugs. The tubes are supported in assemblies by a spring clip grid structure. The mechanical control rods consist of

clusters of stainless steel clad absorber rods and guide tubes located within the fuel assembly. The core fuel is loaded in three regions. New fuel is introduced into the outer region, and partially spent fuel is moved inward into a checkerboard pattern at successive refuelings when the inner region is discharged to spent fuel storage.

The steam generators are vertical U-tube units containing Inconel tubes. Integral separating equipment reduces the moisture content of the steam at the steam generator outlet to 1/4 percent or less.

The reactor coolant pumps are vertical, single stage, centrifugal pumps equipped with controlled leakage shaft seals.

Auxiliary systems are provided to charge the Reactor Coolant System and to add makeup water, purify reactor coolant water, provide chemicals for corrosion inhibition and reactor control, cool system components, remove residual heat when the reactor is shutdown, cool the spent fuel storage pool, sample reactor coolant water, provide for emergency safety injection, and vent and drain the Reactor Coolant System.

1.2.3 CONTROL SYSTEM

Each reactor is controlled by a coordinated combination of chemical shim and mechanical control rods. The control system allows the units to accept step load changes of 10% and ramp load changes of 5% per minute over the load range of 15 to 100% power under nominal operating conditions.

Supervision of both the steam supply and turbine generator systems is accomplished from the control room shared by Units 3 and 4. The control room layout including location of control boards for each unit is shown in Figure 7.7-1.

The control room is approximately 40' x 70' and has control boards arranged to give adequate distance between operator areas to preclude interference. The annunciators and alarms for the two units are separated and have distinguishable audible tones.

The waste disposal control boards are located in the Auxiliary Building, and the radwaste facility building, and permit the operator to control and monitor the processing of wastes from locations adjacent to the equipment.

1.2.4 WASTE DISPOSAL SYSTEM

The Waste Disposal System provides equipment necessary to collect, process, and prepare for disposal of potentially radioactive liquid, gaseous, and solid wastes produced as a result of reactor operation.

Contaminated liquid wastes are collected and processed by plant filters and demineralizers. The effluents are sampled to determine residual activity and monitored during discharge to the cooling canal system via the condenser discharge to assure concentrations below 10CFR20 guidelines. The filters and spent resins from demineralizers are processed and disposed of in accordance with applicable regulations currently in force.

Gaseous wastes are collected and stored until their radioactivity level is low enough to permit discharge to the environment at concentrations below 10 CFR 20 guidelines.

1.2.5 FUEL HANDING SYSTEM

The reactor is refueled with equipment designed to handle spent fuel under water from the time it leaves the reactor vessel until it is placed in a cask for shipment from the site. Underwater transfer of spent fuel provides an optically transparent radiation shield, as well as a

reliable source of coolant for removal of decay heat. This system also provides capability for receiving, handling and storage of new fuel.

1.2.6 TURBINE AND AUXILIARIES

The turbine is a tandem-compound, 3-element, 1,800 rpm unit having 45-inch exhaust blading in the low pressure elements. Four combination moisture separator-reheater units are employed to dry and superheat the steam between the high and low pressure turbine cylinders.

A twin-shell deaerating type condenser with semi-cylindrical water boxes bolted to both ends, steam jet air ejectors, three 60% capacity condensate pumps, two 60% capacity motor-driven boiler feed pumps, and six stages of feedwater heaters are provided. Three auxiliary steam-driven feedwater pumps and two standby steam generator feedwater pumps are available in case of a complete loss of normal feedwater.

1.2.7 ELECTRICAL SYSTEM

The main generator is an 1,800 rpm, 3 phase, 60 Hz, hydrogen-cooled unit. The main step-up transformer is a conventional two-winding forced oil-air cooled unit.

The Station Service System consists of startup, auxiliary and C Bus transformers, 4160V switchgear, 480V load centers, 480V motor control centers, 120V AC distribution panels and 125V DC equipment.

Emergency power is supplied by alternate sources including four emergency diesel generators. The emergency diesel generators are capable of operating equipment required for the normal shutdown of one unit plus the equipment required for a postulated loss-of-coolant accident in the second unit assuming a single failure.

1.2.8 ENGINEERED SAFETY FEATURES

The Engineered Safety Features provided have redundancy of component and power sources such that under the conditions of a hypothetical loss-of-coolant accident, the systems can, even when operating with partial effectiveness, maintain the integrity of the containment and keep the off site activity levels below the guidelines of 10 CFR 100.

The systems provided are summarized below:

a) The Containment System provides a highly reliable leak-tight barrier against the escape of fission products. The containment penetrations are provided with a leak-test system utilized to check the integrity of those locations which are the most likely sources of containment leakage.

b) The Safety Injection System provides borated water to cool the core by injection into both cold and hot legs of the reactor coolant system.

c) The Containment Spray System provides a spray of borated water to cool and thus depressurize the containment after a loss-of-coolant or main steam line break accident.

d) The Emergency Containment Cooling System provides a heat sink to cool and thus depressurize the containment after a loss-of-coolant or main steam line break accident.

e) The Emergency Containment Filtering System provides a rapid cleanup of iodine from the containment atmosphere after a loss-of-coolant accident.

1.2.9 FIRE PROTECTION PROGRAM

The Fire Protection program is described in Appendix 9.6A.

FINAL SAFETY ANALYSIS REPORT

FIGURE 1.2-1

REFER TO ENGINEERING DRAWING

5610-C-2

REV. 13 (10/96)

FLORIDA POWER & LIGHT COMPANY
TURKEY POINT PLANT UNITS 3 & 4

GENERAL BUILDING
ARRANGEMENT PLAN

FIGURE 1.2-1

FINAL SAFETY ANALYSIS REPORT

FIGURE 1.2-2

REFER TO ENGINEERING DRAWING

5610-M-55

REV. 13 (10/96)

FLORIDA POWER & LIGHT COMPANY
TURKEY POINT PLANT UNITS 3 & 4

GENERAL ARRANGEMENT
PLAN EL. 10'-0"

FIGURE 1.2-2

FINAL SAFETY ANALYSIS REPORT

FIGURE 1.2-3

REFER TO ENGINEERING DRAWING

5610-M-56

REV. 13 (10/96)

FLORIDA POWER & LIGHT COMPANY
TURKEY POINT PLANT UNITS 3 & 4

GENERAL ARRANGEMENT
GROUND FLOOR PLAN
EL. 18' -0"
FIGURE 1.2-3

FINAL SAFETY ANALYSIS REPORT

FIGURE 1.2-4

REFER TO ENGINEERING DRAWING

5610-M-57, SHEET 1

REV. 13 (10/96)

FLORIDA POWER & LIGHT COMPANY

TURKEY POINT PLANT UNITS 3 & 4

GENERAL ARRANGEMENT
OPERATING FLOOR PLAN
EL. 42'-0" & EL 58'-0"

FIGURE 1.2-4

FINAL SAFETY ANALYSIS REPORT

FIGURE 1.2-5

REFER TO ENGINEERING DRAWING

5610-M-58

REV. 13 (10/96)

FLORIDA POWER & LIGHT COMPANY
TURKEY POINT PLANT UNITS 3 & 4

GENERAL ARRANGEMENT
MEZZANINE FLOOR PLAN
AND SECTION "A - A"
FIGURE 1.2-5

FINAL SAFETY ANALYSIS REPORT

FIGURE 1.2-6

REFER TO ENGINEERING DRAWING

5610-M-59

REV. 13 (10/96)

FLORIDA POWER & LIGHT COMPANY
TURKEY POINT PLANT UNITS 3 & 4

GENERAL ARRANGEMENT
SECTIONS "B - B" AND "C - C"

FIGURE 1.2-6

FINAL SAFETY ANALYSIS REPORT

FIGURE 1.2-7

REFER TO ENGINEERING DRAWING

5610-M-60

REV. 13 (10/96)

FLORIDA POWER & LIGHT COMPANY
TURKEY POINT PLANT UNITS 3 & 4

GENERAL ARRANGEMENT
SECTIONS "D - D" & "E - E"

FIGURE 1.2-7

FINAL SAFETY ANALYSIS REPORT

FIGURE 1.2-8

REFER TO ENGINEERING DRAWING

5614-M-724

REV. 13 (10/96)

FLORIDA POWER & LIGHT COMPANY
TURKEY POINT PLANT UNIT 4

GENERAL ARRANGEMENT
UNIT 4 EDG BUILDING
PLAN AND SECTIONS
FIGURE 1.2-8

1.3 GENERAL DESIGN CRITERIA

The general design criteria define or describe safety objectives and approaches incorporated in the design. These general design criteria are addressed explicitly in the pertinent sections in this report. The remainder of this section, 1.3, presents a brief description of related features which are provided to meet the design objectives reflected in the criteria. The description is developed more fully in those succeeding sections of the report indicated by the references.

The parenthetical numbers following the section headings indicate the numbers of the 1967 proposed draft General Design Criteria (GDC).

1.3.1 OVERALL REQUIREMENTS (GDC 1-GDC 5)

All systems and components of the facility are classified according to their importance. Those items vital to safe shutdown and isolation of the reactor or whose failure might cause or increase the severity of an accident or result in an uncontrolled release of excessive amounts of radioactivity are designated Class I. Those items important to operation but not essential to safe shutdown and isolation of the reactor or control of the release of substantial amounts of radioactivity are designated Class III.

Class I systems and components are essential to the protection of the health and safety of the public. Quality standards of material selection, design, fabrication and inspection conform to the applicable provisions of recognized codes, and good nuclear practice.

All systems and components designated Class I are designed so that there is no loss of capability to perform their safety function in the event of the maximum hypothetical seismic ground acceleration acting in the horizontal and vertical directions simultaneously. The working stress for Class I item is kept within code allowable values for the design seismic ground acceleration. Similarly, measures are taken in the design to protect against high winds,

sudden barometric pressure changes, flooding, and other natural phenomena. The Containment and Auxiliary Building are designed to withstand the effects of a tornado.

Reference sections:

Section Title	Section
Site and Environment; Meteorology, Seismology	2.6, 2.11
Reactor Coolant System; Design Bases	4.1
Containment Structure; Design Bases	5.1
Electrical System; Design Bases	8.1
Unit 4 Emergency Diesel Generator Building	5.3.4
Structures, Systems and Equipment	Appendix 5A

The fire protection program for the nuclear units is described in the below referenced section:

Reference section:

Section Title	Section
Fire Protection Program	Appendix 9.6A

Certain components of the Auxiliary, Emergency and Waste Disposal Systems are shared by Units 3 and 4. Certain components of shared equipment may be called upon to fulfill either an emergency, or emergency and shutdown function. The design and its evaluation supports the capability to deal with the affected unit, while maintaining safe control of the second unit.

A complete set of as-built drawings is maintained throughout the life of the units. A set of all the quality assurance data generated during fabrication and erection of the essential components is retained.

Reference sections:

Section Title	Section
Records	12.4
Initial Tests and Operation	13
Functional Evaluation of the Components of the Systems which are shared by the two units	Appendix A

1.3.2 PROTECTION BY MULTIPLE FISSION PRODUCT BARRIERS (GDC 6-GDC 10)

The reactor core with its related control and protection system is designed to function throughout its design lifetime without exceeding acceptable fuel limits specified to preclude damage. The core design, together with reliable process and decay heat removal systems, provides for this capability under all expected conditions of normal operation with appropriate margins for uncertainties and anticipated transient situations.

The Reactor Control and Protection System is designed to actuate a reactor trip for any anticipated combination of plant conditions, when necessary, to ensure a minimum Departure from Nucleate Boiling (DNB) ratio equal to or greater than the safety analysis limit value.

Reference sections:

Section Title	Section
Reactor, Design Basis, Reactor Design	3.1, 3.2
Instrumentation and Control, Protective Systems	7.2
Safety Analysis	14

The design of the reactor core and related protection systems ensures that power oscillations which could cause fuel damage in excess of acceptable limits are not possible.

The potential for possible spatial oscillations of power distribution for the first core has been reviewed. It was concluded that low frequency xenon oscillations could have occurred in the axial dimension and part length control rods were provided to suppress these oscillations. The core was determined to be stable to xenon oscillations in the X-Y dimension. Excore instrumentation is provided to obtain necessary information concerning power distribution. This instrumentation is adequate to enable the operator to monitor xenon induced oscillations. The part length control rods were removed from the core after the first few cycles of operation. Their removal was based on a determination that their presence was not required, since the control banks provide adequate means for controlling the xenon oscillations.

Reference section:

Section Title	Section
Reactor Design, Nuclear Design and Evaluation	3.2.1
Reactor Coolant System Pipe Rupture	14.3

The Reactor Coolant System in conjunction with its control and protective provisions is designed to accommodate the system pressures and temperatures attained under all expected modes of operation or anticipated system interactions, and maintain the stresses within applicable code stress limits.

The materials of construction of the pressure boundary of the Reactor Coolant System are protected by control of coolant chemistry from corrosion phenomena which might otherwise reduce the system structural integrity during its service lifetime.

System conditions resulting from anticipated transients or malfunctions are monitored, and appropriate action is automatically initiated to maintain the required cooling capability and to limit system conditions to a safe level.

The system is protected from overpressure by means of pressure relieving devices, as required by Section III of the ASME Boiler and Pressure Vessel Code.

Isolatable sections of the system are provided with overpressure relieving devices to closed systems such that the system code allowable relief pressure within the protected section is not exceeded.

Reference sections:

Section Title	Section
Reactor Coolant System, Design Basis	4.1

The design pressure and temperature of the containment exceeds the peak pressure and temperature occurring as the result of the complete blowdown of the reactor coolant through any pipe rupture of the Reactor Coolant System up to and including the hypothetical severance of a reactor coolant pipe.

Piping systems which penetrate the vapor barrier are anchored at the containment liner. The main steam, feedwater, blow down and sample line penetrations are designed stronger than the piping system so that the containment will not be breached due to a hypothesized pipe rupture. Lines connected to the Reactor Coolant System that penetrate the containment are provided with whip restraints and supports. These restraints and supports are designed to withstand the thrust moment and torque resulting from a hypothesized rupture of the attached pipe or the loads induced by the maximum hypothetical earthquake.

Isolation valves are supported to withstand, without impairment of valve operability, the loading of the design basis accident or maximum hypothetical seismic conditions.

Reference section:

Section Title	Section
Containment Structure	5.1

1.3.3 NUCLEAR AND RADIATION CONTROLS (GDC 11 - GDC 18)

The units are equipped with a control room which contains the controls and instrumentation necessary for operation of the reactor and turbine generator under normal and accident conditions.

Sufficient shielding, distance, and containment integrity are provided to assure that control room personnel shall not be subjected to doses for the duration of the hypothetical accident conditions during occupancy of, ingress to and egress from the control room which exceed a small fraction of 10 CFR 100 guidelines.

Instrumentation and controls essential to avoid undue risk to the health and safety of the public are provided to monitor and maintain within prescribed operating ranges the neutron flux temperatures, pressure, flow, and levels in the Reactor Coolant System, Steam Systems, Containment and Auxiliary Systems.

The quantity and types of instrumentation provided are adequate for safe and orderly operation of all systems and processes over the full operating range of the units.

The operational status of the reactor is monitored from the control room. When the reactor is subcritical the spontaneous neutrons from the irradiated fuel are continuously monitored and indicated by proportional counters located in the instrument wells in the primary shield adjacent to the reactor vessel. The source detector channels are checked prior to operations in which criticality may be approached. Any

appreciable increase in the neutron source multiplication, including that caused by the maximum physical boron dilution rate, is slow enough to give ample time to start corrective action (boron dilution stop and/or emergency boron injection) to prevent the core from becoming critical.

When the reactor is critical, means for showing the relative reactivity status of the reactor is provided by control bank positions displayed in the control room. Periodic samples of the coolant boron concentration are taken. The variation in concentration during core life provides a further check on the reactivity status of the reactor including core depletion.

Instrumentation and controls provided for the protective systems are designed to trip the reactor, when necessary, to prevent or limit fission product release from the core and to limit energy release; to signal containment isolation; and to control the operation of engineered safety features equipment.

During reactor operation in the startup and power modes, redundant safety limit signals will automatically actuate two reactor trip breakers which are in series with the control rod drive mechanism coils. This action would interrupt power and initiate reactor trip.

Reference section:

Section Title	Section
Instrumentation and Controls	7.1, 7.2, 7.4, 7.7

If the reactor protection system receives signals which are indicative of an approach to an unsafe operating condition, the system actuates alarms, prevents control rod motion, initiates load cutback, and/or opens the reactor trip breakers.

The basic reactor operating philosophy is to define an allowable region of power and coolant temperature conditions. This allowable range is defined by the primary tripping functions, the overpower ΔT trip, over-temperature ΔT trip, and the nuclear overpower trip. The operating region below these trip settings is designed so that no combination of power, temperatures and pressure could result in DNBR less than the safety analysis limit value with all reactor coolant pumps in operation. Additional tripping functions such as a high pressurizer pressure trip, low pressurizer pressure trip, high pressurizer water level trip, loss of flow trip, steam and feedwater flow mismatch trip, steam generator low-low level trip, turbine trip, safety injection trip, nuclear source and intermediate range level trips, and manual trip are provided to back up the primary tripping functions for specific accident conditions and mechanical failures.

Rod stops from nuclear overpower, overpower ΔT and over-temperature ΔT deviation are provided to prevent abnormal power conditions which could result from excessive control rod withdrawal initiated by a malfunction of the reactor control system or by operator error.

Reference sections:

Section Title	Section
Safety Injection Systems	6.2
Reactor Protection System	7.2

Positive indications in the control room of leakage of coolant from the Reactor Coolant System to the containment are provided by equipment which permits continuous monitoring of the containment air activity. Deviations from normal containment environmental conditions including air particulate activity, radiogas activity, and, in the case of gross leakage, the liquid inventory in the process systems and containment sump, will be detected.

For the case of leakage from the containment under accident conditions the area radiation monitoring system supplemented by portable survey equipment provides adequate monitoring of releases during an accident.

Monitoring and alarm instrumentation are provided for waste storage and fuel handling areas to detect inadequate cooling and to detect excessive radiation levels. Radiation monitors are provided to maintain surveillance over the release of radioactive gases and liquids.

A controlled ventilation system removes gaseous radioactivity from the atmosphere of the fuel storage and waste treating areas of the auxiliary building and discharges it to the atmosphere via the plant vent or the Unit 3 Spent Fuel Pool stack vent. Radiation monitors are in continuous service in these areas to actuate high-activity alarms on the control board annunciator, as described in Section 11.2.3.

Reference sections:

Section Title	Section
Leakage Detection	6.5
Auxiliary Coolant System	9.3
Radiation Protection	11.2

1.3.4 RELIABILITY AND TESTABILITY OF PROTECTION SYSTEMS (GDC 19-GDC 26)

Upon a loss of power to the control rod drive mechanism coils, the full length rod cluster control assemblies (RCCAs) are released and free fall into the core. The reactor

internals, fuel assemblies, RCCAs and drive system components are designed as Class I equipment. The RCCAs are fully guided through the fuel assembly and for the maximum travel of the control rod into the guide tube. Furthermore, the RCCAs are never fully withdrawn from their guide thimbles in the fuel assembly. As a result of these design safeguards and the flexibility designed into the RCCAs, abnormal loadings and misalignments can be sustained without impairing operation of the RCCAs.

Protection channels are designed with sufficient redundancy for individual channel calibration and test to be made during operation without degrading the reactor protection system. Removal of one trip circuit for test is accomplished by placing that channel in a tripped mode. For example, a two-out-of-three logic becomes a one-out-of-two logic. Testing will not cause a trip unless a trip condition exists in a concurrent channel. The trip signal furnished by the two remaining channels would be unimpaired in this event.

In the Reactor Protection System, two reactor trip breakers are provided to interrupt power to the RCCA drive mechanisms. The breaker main contacts are connected in series (with the power supply) so that opening either breaker interrupts power to all full length RCCAs permitting the RCCAs to free fall into the core. Each breaker is opened through an undervoltage trip coil or a shunt trip coil. Each protection channel actuates two separate trip logic trains, one for each reactor trip breaker undervoltage trip coil. The protection system is thus inherently safe in the event of a loss of rod control power.

Channel independence is carried throughout the system extending from the sensor to the relay actuating the protective function. The protective and control functions when combined are combined only at the sensor. A failure in the control circuit does not affect the protection channel.

The power supplied to the channels are fed from four instrument buses. All four buses are supplied by inverters.

The initiation of the engineered safety features provided for loss-of-coolant accidents is accomplished from redundant signals derived from reactor coolant system and containment instrumentation. The initiation signal for containment spray comes from the coincidence of two sets of two-out-of-three high containment pressure signals. Upon loss of voltage on a 4160 volt bus, the associated emergency diesel generator will be automatically started and connected to the bus.

The components of the protection system are designed and arranged so that the mechanical and thermal environment accompanying any emergency situation in which the components are required to function does not interfere with that function.

The signal conditioning equipment of each protection channel in service at power is capable of being calibrated and tripped independently by simulated analog input signals to verify its operation without tripping the reactor.

Each reactor trip channel is designed so that trip occurs when the circuit is de-energized; an open circuit or loss of channel power causes the system to go into its trip mode. In two-out-of-three logic, the three channels are equipped with separate primary sensors and each channel is energized from an independent electrical power supply.

The signal for containment isolation is developed from two-out-of-three logic in which each channel is separated and independent. The failure of any channel does not interfere with the proper functioning of the isolation circuit.

Redundancy in emergency power is provided by four emergency diesel-generator sets, each capable of supplying a separate 4160 volt bus. Each unit's A and B train of engineered safety features is powered by a separate emergency diesel generator. Manual swing train D can be powered by either emergency diesel generator of the associated unit. This swing train powers redundant engineered safety features.

Diesel engine starting is accomplished by compressed air supplied solely for the associated emergency diesel generator. The undervoltage relay scheme is designed so that loss of 4160 volt power does not prevent the relay scheme from functioning properly.

The ability of the emergency diesel generator sets to start within the prescribed time and to carry load can periodically be checked. The emergency diesel generator breaker is not closed automatically after starting during this testing. The generator may be manually synchronized to its associated 4160 volt bus for loading.

Reference sections:

Section Title	Section
Instrumentation and Control; Protection Systems	7.2

1.3.5 REACTIVITY CONTROL (GDC 27-GDC 32)

In addition to the reactivity control achieved by the rod cluster control assemblies (RCCAs) as detailed in Section 7, reactivity control is provided by the Chemical and Volume Control System which regulates the concentration of boric acid solution neutron absorber in the Reactor Coolant System. The system is designed to limit the rate of uncontrolled or inadvertent reactivity changes to a value which provides the operators sufficient time to correct the situation prior to system parameters exceeding design limits.

The reactivity control systems provided are capable of making and holding the core subcritical from any hot standby or hot operating condition, including those resulting from power changes.

The RCCAs are divided into two categories comprising control and shutdown rod groups. One control group of RCCAs is used to compensate for short term reactivity changes at power such as those produced due to variations in reactor power requirements or in coolant temperature. The chemical shim control is used to compensate for the more slowly occurring changes in reactivity throughout core life such as those due to fuel depletion and fission product buildup and decay.

The shutdown groups are provided to supplement the control groups of RCCAs to make the reactor at least one percent subcritical (k_{eff} = 0.99) following a trip from any credible operating condition to the hot, zero power condition, assuming the most reactive RCCA remains in the fully withdrawn position.

Any time that the reactor is at power, the quantity of boric acid retained in the boric acid tanks and ready for injection will always exceed that quantity required to support a cooldown to cold shutdown conditions without letdown. Under these conditions, adequate boration can be achieved simply by providing makeup for coolant contraction from a boric acid storage tank and the refueling water storage tank. The minimum volume maintained in the boric acid storage tanks, therefore, is that volume necessary to increase the RCS boron concentration during the early phase of the cooldown of each unit such that subsequent use of the refueling water storage tank for contraction makeup will maintain the required shutdown margin throughout the remaining cooldown. In addition, the boric acid storage tanks have sufficient boric acid solution to achieve cold shutdown for each unit if the most reactive RCCA is not inserted.

Boric acid is pumped from the boric acid storage tanks by one of two boric acid transfer pumps to the suction of one of three charging pumps which inject boric acid into the reactor coolant. Any charging pump and either boric acid transfer pump can be operated from diesel generator power on loss of offsite power. Boric acid can be injected by one pump at a rate which takes the reactor to hot standby with no rods inserted in less than forty minutes when

a feed and bleed process is utilized (less than 30 minutes when the available pressurizer volume is utilized). In forty additional minutes, enough boric acid can be injected to compensate for xenon decay although xenon decay below the equilibrium operating level does not begin until approximately 15 hours after shutdown. If two boric acid pumps and two charging pumps are available, these time periods are reduced. Additional boric acid injection is employed if it is desired to bring the reactor to cold shutdown conditions.

The Reactor Protection System is capable of protecting against any single anticipated malfunction of the reactivity control system and is designed to limit reactivity transients to DNBR equal to or greater than the safety analysis value due to any single malfunction in the deboration controls.

Limits, which include considerable margin, are placed on the maximum reactivity worth of control rods and on rates at which reactivity can be increased, to ensure that the potential effects of a sudden or large change of reactivity cannot: (a) rupture the reactor coolant pressure boundary; or (b) disrupt the core, its support structures, or other vessel internals so as to lose capability to cool the core.

The control rod cluster drive mechanisms are wired into preselected groups, and are therefore prevented from being withdrawn in other than their respective groups. The control rod drive mechanism is of the magnetic latch type and the coil actuation is sequenced to provide variable speed rod travel. The maximum insertion rate is analyzed in the detailed plant analysis assuming two of the highest worth groups to be accidentally withdrawn at maximum speed, yielding reactivity insertion rates of the order of 11×10^{-4} Δk/sec which is well within the capability of the overpower-overtemperature protection circuits to prevent core damage.

Reference sections:

Section Title	Section
Reactor Design Bases	3.1
Protection Systems	7.2
Regulating Systems	7.3
Chemical and Volume Control System	9.2

1.3.6 REACTOR COOLANT PRESSURE BOUNDARY (GDC 33-GDC 36)

The reactor coolant boundary is shown to be capable of accommodating without rupture, the static and dynamic loads imposed as a result of a sudden reactivity insertion such as a rod ejection.

The operation of the reactor is such that the severity of an ejection accident is inherently limited. Since RCCAs are used to control load variations only and boron dilution is used to compensate for core depletion, only the RCCAs in the controlling groups are inserted in the core at power, and at full power these rods are only partially inserted. A rod insertion limit monitor is provided as an administrative aid to the operator to ensure that this condition is met.

By using the flexibility in the selection of control rod groupings, radial locations and position as a function of load, the design limits the maximum fuel temperature for the highest worth ejected rod to a value which precludes any resultant damage to the system pressure boundary from possible excessive pressure surges.

The failure of a rod mechanism housing causing a rod cluster to be rapidly ejected from the core is evaluated as a hypothetical, though not a credible accident. While limited fuel damage could result from this hypothetical event, the fission products are confined to the Reactor Coolant System and the containment.

The reactor coolant pressure boundary is designed to reduce to an acceptable level the probability of a rapidly propagating type failure.

In the core region of the reactor vessel it is expected that the ductility of the material will change as a result of exposure to fast neutrons. This change is evidenced as a shift in the Reference Nil Ductility Temperature RT (ndt) which is factored into the operating procedures in such a manner that full operating pressure is not applied until the vessel material is well above the RT(ndt).

The value of the RT(ndt) is increased during the life of the unit as required by the expected shift in the RT(ndt), and as confirmed by the experimental data obtained from irradiated specimens of reactor vessel materials.

The design of the reactor vessel and its arrangement in the system permits accessibility during the service life to the entire internal surfaces of the vessel and to the following external zones of the vessel: the flange seal surface, the flange O.D. down to the cavity seal ring, the closure head except around the drive mechanism adapters and the nozzle to reactor coolant piping welds. The reactor arrangement within the containment provides sufficient space for inspection of the external surfaces of the reactor coolant piping, except for the area of pipe within the primary shielding concrete.

Monitoring of the RT(ndt) properties of the core region plates, forgings, weldments and associated heat treated zones are performed in accordance with the version of ASTM E185,"Recommended Practice for Surveillance Tests on Structural Materials in Nuclear Reactors," required by 10 CFR 50, Appendix H. Samples of reactor vessel plate materials are retained and catalogued in case future engineering development shows the need for further testing.

The material properties surveillance program includes not only the conventional tensile and impact tests, but also fracture mechanics tests. The observed shifts in RT(ndt) of the core region materials with irradiation will be used to confirm the calculated limits of startup and shutdown transients.

To define permissible operating conditions below RT(ndt), a pressure range is established which is bounded by a lower limit for pump operation and an upper limit which satisfies reactor vessel stress criteria. Since the normal operating temperature of the reactor vessel is well above the maximum expected RT(ndt), brittle fracture during normal operation is not considered to be credible.

Reference sections:

Section Title	Section
Reactor Coolant System	
System Design and Operation	4.2
Tests and Inspections	4.4
Vessel RT(ndt)	Appendix 4A

1.3.7 ENGINEERED SAFETY FEATURES (GDC 37-GDC 65)

The design, fabrication, testing and inspection of the core, reactor coolant pressure boundary and their protection systems give assurance of safe and reliable operation under all anticipated normal, transient, and accident conditions. However, engineered safety features are provided in the facility to back up the safety provided by these components. These engineered safety features have been designed to cope with any size reactor coolant pipe break up to and including the circumferential rupture of any pipe assuming unobstructed discharge from both ends.

The release of fission products from the reactor fuel is limited by the Safety Injection System which, by cooling the core and limiting the fuel clad temperature, keeps the fuel in place and substantially intact and limits the metal-water reaction to an insignificant amount.

For any rupture of a steam pipe and the associated uncontrolled heat removal from the core, the Safety Injection System adds shutdown reactivity so that with a stuck rod, no off-site power and minimum engineered safety features, there is no consequential damage to the fuel or the primary system and the core remains in place and intact.

The Safety Injection System consists of high and low head centrifugal pumps driven by electric motors, and passive accumulator tanks which are self energized and which act independently of any actuation signal or power source.

The release of fission products from the containment is limited in three ways:

1. Blocking the potential leakage paths from the containment. This is accomplished by:

    a. A steel-lined, concrete containment with testable penetrations.

    b. Isolation of process lines by the Containment Isolation System which imposes double barriers in each line which penetrates the containment.

2. Reducing the fission product concentration in the containment atmosphere by filtration.

3. Reducing the containment pressure and thereby limiting the driving potential for fission product leakage by cooling the containment atmosphere using the following independent systems.

   a. Containment Spray System

   b. Emergency Containment Cooling System

A comprehensive program of testing is formulated for all equipment systems and system control vital to the functioning of engineered safety features and associated secondary components such as the main steam isolation valves and the Auxiliary Feedwater System. The program consists of performance tests of individual pieces of equipment in the manufacturer's shop, integrated tests of the system as a whole, and periodic tests of the actuation circuitry and mechanical components to assure reliable performance. In the event that one of the components should require maintenance as a result of failure to perform during the test according to prescribed limits, the necessary corrections will be made and the unit retested.

The units are supplied with normal, standby and emergency power sources as follows:

1. The normal source of auxiliary power during operation is the generator and switchyard via the C Bus transformer. Power is supplied via the unit auxiliary transformer which is connected to the isolated phase bus of the generator and the C Bus transformer which is connected to the switchyard.

2. Power required during startup, shutdown and after reactor trip is supplied from the plant switchyard via the startup and C-Bus transformers which has multiple lines running to the transmission system.

3. One emergency diesel generator is connected to each of the safety related 4160V busses to supply emergency power in the event of loss of offsite power. The emergency diesel generators are capable of automatically supplying the engineered safety features load required for any loss-of-coolant accident assuming any credible single failure.

4. Emergency power supply for vital instruments, for control and for emergency lighting is supplied from 125V DC batteries.

The 4160V bus arrangement and logic network provides the capability for certain loads to be powered by either emergency diesel generator of the associated unit following the failure of one diesel generator unit to start.

For engineered safety features as are required to ensure safety in the event of an accident or equipment failure, protection is provided primarily by the provisions which are taken in the design to prevent the generation of missiles. In addition, protection is also provided by the layout of equipment or by missile barriers in certain cases.

Layout and structural design specifically protect safety injection piping leading to unbroken reactor coolant loops against damage as a result of the maximum hypothetical accident. (However, dynamic effects of postulated primary loop pipe ruptures have been eliminated from the Turkey Point design basis based on the resolution of Generic Letter 84-04, "Asymmetric LOCA Loads," in NRC letter dated November 28, 1988.) Injection lines penetrate the missile barrier, and the injection headers are located in the missile protected area between the missile barrier and the containment wall. Individual injection lines, connected to the injection headers, pass through the barrier and then connect to the loops. Movement of the injection line, associated with rupture of a reactor coolant loop, is accommodated by line flexibility and by the design of the pipe supports such that no damage outside the missile barrier is possible.

Each engineered safety feature provides sufficient performance capability to accommodate any single failure of an active component and still function in a manner to avoid undue risk to the health and safety of the public.

All active components of the Safety Injection System (with the exception of some injection line isolation valves) and the Containment Spray System are located outside the containment and not subjected to containment accident conditions.

Instrumentation, motors, cables and penetrations located inside the containment are selected to meet the most adverse accident conditions to which they may be subjected. These items are either protected from containment accident conditions or are designed to withstand, without failure, exposure to the combination of temperature, pressure, radiation and humidity expected during the required operational period.

The reactor is maintained subcritical following a reactor coolant system pipe rupture accident. Introduction of borated cooling water into the core results in a net negative reactivity addition. No credit is taken for control rod insertion.

The delivery of cold safety injection water to the reactor vessel following accidental expulsion of reactor coolant does not cause further loss of integrity of the Reactor Coolant System boundary.

Design provisions are made to facilitate access to the critical parts of the reactor vessel internals, injection nozzles, pipes, valves and safety injection pumps for visual or boroscopic inspection for erosion, corrosion and vibration wear evidence, and for non-destructive inspection where such techniques are desirable and appropriate.

The design provides for periodic testing of active components of the Safety Injection System for operability and functional performance. The safety injection pumps can be tested periodically during operation using the full flow recirculation lines provided. The residual heat removal pumps are used every time the residual heat removal loop is put into operation, and can be tested periodically on recirculation alignments.

An integrated safeguards test can be performed during refueling outages prior to heatup. This test would not introduce flow into the Reactor Coolant System but would demonstrate the operation of the valves, pump circuit breakers, and automatic circuitry upon initiation of safety injection. A test is performed during refueling outages to demonstrate the ability to introduce flow into the reactor coolant system.

The accumulator tank pressure and level are continuously monitored during reactor operation.

The accumulators and the safety injection piping up to the final isolation valve is maintained full of borated water at refueling water concentration while the reactor is in operation. Flow in each of the hot and cold leg injection headers lines and in the main flow line for the residual heat removal pumps is monitored by a flow indicator.

The design provides for capability to test initially, to the extent practical, the full operational sequence up to the design conditions for the Safety Injection System to demonstrate the state of readiness and capability of the system.

Tests are performed to provide information to confirm valve operating times, pump motor starting times, the proper automatic sequencing of load addition to the diesel-generators, and delivery rates of injection water to the Reactor Coolant System.

The following general criteria are followed to assure conservatism in computing the required containment structural load capacity:

a) In calculating the containment pressure, rupture sizes up to and including a double-ended break of reactor coolant pipe are considered.

b) In considering post-accident pressure effects, various malfunctions of the emergency systems are evaluated including failures of a diesel-generator, an emergency containment cooler and a containment spray pump.

c) The pressure and temperature loadings obtained by analyzing various loss-of-coolant accidents, when combined with operating loads and design wind or seismic forces, do not exceed the load-carrying capacity of the structure, its access openings or penetrations.

The reinforced concrete containment is not susceptible to a low temperature brittle fracture. The containment liner is enclosed within the containment and thus is not exposed to the temperature extremes of the environment. Typically, the containment bulk ambient temperature during operation is between 50◦F and 120◦F. Operation with elevated normal bulk containment temperatures up to 125◦F for short periods of time during the summer months has been evaluated (See Section 14.0). The material for the containment penetrations, which are designed to Subsection B of Section III ASME B&PV Code has a RT(ndt) of 0◦F.

The reactor coolant pressure boundary does not extend outside of the containment. Isolation valves for all fluid system lines penetrating the containment provide at least two barriers against leakage of radioactive fluids to the environment in the event of a loss-of-coolant accident. These barriers, in the form of isolation valves or closed systems, are defined on an individual line basis. In addition to satisfying containment isolation criteria, the valving is designed to facilitate normal operation, and maintenance of the systems and to ensure reliable operation of other engineered safety features.

After completion of the containment structure an initial integrated leak rate test was conducted at the calculated peak accident pressure, to verify that the leakage rate is not greater than 0.25 per cent by weight of containment air per day.

Leak rate tests are performed during unit shutdowns periodically on a frequency determined by the Containment Leakage Rate Testing Program in accordance with the Technical Specifications.

Capability is provided to the extent practical for testing the functional operability of valves and associated apparatus during periods of reactor shutdown.

Initiation of containment isolation employs coincidence circuits which allow checking of the operability and calibration of one channel at a time.

Design provisions are made to the extent practical to facilitate access for periodic visual inspection of important components of the Emergency Containment Cooling and Filtering and Containment Spray Systems.

The containment pressure reducing systems are designed to the extent practical so that the spray pumps, spray valves and spray nozzles can be tested periodically and after any component maintenance for operability.

Permanent test lines for all the containment spray loops are located so that all components up to the containment isolation valves may be tested. The manual isolation valves are checked for leakage during local leak rate testing.

The containment spray nozzles in containment are periodically verified to be unobstructed by verification of air flow by use of thermography or other appropriate means.

Capability is provided to test initially, to the extent practical, the operational startup sequence beginning with transfer to alternate power sources and ending with near design conditions for the Containment Spray and the Emergency Containment Cooling Systems, including the transfer to the alternate emergency diesel-generator power source.

Reference sections:

Section Title	Section
Containment	5.1
Engineered Safety Features	6
Electrical System	8.1, 8.2

1.3.8 FUEL AND WASTE STORAGE SYSTEMS (GDC 66-GDC 69)

The new and spent fuel storage racks are designed so that it is impossible to insert assemblies in other than prescribed locations. Borated water is used to fill the spent fuel storage pit at a concentration to match that used in the refueling cavity and refueling canal during refueling operations. The fuel is stored vertically in an array with sufficient center-to-center distance between assemblies to assure $k_{eff} \leq 0.95$ with a sufficient soluble boron concentration present. Criticality of the fuel assemblies in the spent fuel rack is prevented by the inherent design of the rack which limits fuel assembly interaction. This is done by fixing the minimum separation between assemblies and inserting neutron poison between the assemblies.

During reactor vessel head removal and while loading and unloading fuel from the reactor, the boron concentration is maintained at not less than that required to shutdown the core to a $k_{eff} = 0.95$. This shutdown margin maintains the core subcritical, even if all control rods are withdrawn from the core. Periodic checks of refueling water boron concentration ensure the proper shutdown margin.

The design of the fuel handling equipment incorporates built-in interlocks and safety features, the use of detailed refueling instructions and observance of minimum operating conditions provide assurance that no incident could occur during the refueling operations that would result in a risk to public health and safety.

The refueling water provides a reliable and adequate cooling medium for spent fuel transfer. Heat removal is accomplished with a Residual Heat Removal Heat Exchanger.

Adequate shielding for radiation protection is provided during reactor refueling by conducting all spent fuel transfer and storage operations under water. This permits visual control of the operation at all times while maintaining low radiation levels, less than 15 mr/hr, for periodic occupancy of the area by operating personnel. Pit water level is alarmed in the control room and water to be removed from the pit must be pumped out as there are no gravity drains. Shielding is provided for waste handling and storage facilities to permit operation within guidelines of 10CFR20.

Gamma radiation is continuously monitored at various locations in the Auxiliary Building. A high level signal is alarmed locally and is annunciated in the control room.

Auxiliary shielding for the Waste Disposal System and its storage components was designed to limit the dose rate to levels not exceeding 0.5 mr/hr in normally occupied areas, to levels not exceeding 2.5 mr/hr in periodically occupied areas and to levels not exceeding 15 mr/hr in short specific occupancy areas. Actual dose rates may exceed these design values over time due to accumulation of hot particles, debris, other operational factors, etc.

All waste handling and storage facilities are contained and equipment designed so that accidental releases directly to the atmosphere are monitored and will not exceed the guidelines of 10CFR100; refer also to Section 11.1.2, 14.2.2 and 14.2.3.

The refueling cavity, refueling canal and spent fuel storage pit are reinforced concrete structures with a seam-welded stainless steel plate liner. These structures are designed to withstand the anticipated earthquake loadings as Class I structures.

Reference sections:

Section Title	Section
Fuel Handling System	9.5
Waste Disposal System	11.1
Radiation Protection	11.2
Spent Fuel Storage Facility Modification	App 14D

1.3.9 EFFLUENTS (GDC 70)

Liquid, gaseous, and solid waste disposal facilities are designed so that discharge of effluents and off-site shipments are in accordance with applicable governmental regulations.

Radioactive fluids entering the Waste Disposal System are collected in sumps and tanks until determination of subsequent treatment can be made. They are sampled and analyzed to determine the quantity of radioactivity, with an isotopic identification if necessary. Before discharge, radioactive fluids are processed as required and then released under controlled conditions. The system design and operation are characteristically directed toward minimizing releases to unrestricted areas. Discharge streams are appropriately monitored and safety features are incorporated to preclude releases in excess of 10 CFR 20 guidelines.

Radioactive gases are pumped by compressors through a manifold to one of the gas decay tanks where they are held a suitable period of time for decay. Cover gases in the nitrogen blanketing system are re-used to minimize gaseous wastes. During normal operation, gases are discharged intermittently at a controlled rate from these tanks through the monitored plant vent.

Filter cartridges and the spent resins from the demineralizers are packaged and stored on-site until shipment off-site for disposal.

Reference sections:

Section Title	Section
Waste Disposal System	11.1

1.4 DESIGN PARAMETERS AND UNIT COMPARISON

The original design parameters of the Turkey Point Units 3 and 4 are presented in tabular form along with the comparisons of the major parameters from the final designs of the H. B. Robinson Unit 2, Indian Point Unit 2 and Ginna plants. The purpose and evaluation of the parameter differences from the plant safety point of view among these plants are appended by reference line number. Refer to Table 1.4-1. The design parameters in this table are historical in nature and are not intended to describe the current design.

1.4.1 DESIGN DEVELOPMENTS SINCE RECEIPT OF CONSTRUCTION PERMIT

Burnable Poison Rods

In order to reduce the dissolved poison requirement for control of excess reactivity, burnable poison rods or integral burnable poisons are incorporated in the core design so that changes in coolant density have less effect on density of poison and the moderator temperature coefficient of reactivity becomes less positive (See Section 3.2.1).

Safety Injection System

A second high head safety injection system line and header has been added. This arrangement provides a redundant flow path for high head safety injection water to the reactor coolant loops through the hot legs. To avoid the possibility of steam binding due to injection into the hot legs early in any LOCA transient when steam generators are still relatively hot, the valves which control the flow paths to the hot legs are maintained closed by keeping the motor circuit breakers locked open at the motor control centers. This administrative control ensures that automatic or inadvertent manual actions do not result in hot leg injection.

A valved cross-over in the residual heat removal pump discharge has been added, with a valved by-pass around the residual heat exchangers. This is used to maintain a constant flow through the residual heat removal loop and to control cooldown.

An alternative path to the normal low head safety injection path is provided by MOV-872 using the RHR pumps. This alternative flow path is provided for use in the long term post-LOCA operating mode after switchover to the recirculation mode in the event a passive failure occurs in the normal low head flow path.

A fourth high head safety injection pump has been added to provide greater flexibility for the system.

The power sources for the safety injection pumps were modified. Following the modifications, each SI pump is powered by a separate emergency diesel generator, therefore, the failure of an emergency diesel generator will only result in the loss of one SI pump. Following this change, the operating unit is required to have the two SI pumps associated with the unit and one SI pump associated with the other unit operable to assure two SI pumps are operating following a single failure.

Containment Sumps

The single post-MHA containment sump at the bottom of the reactor cavity with two suction lines to the two residual heat removal pumps, has been relocated and increased to two individual, 100% capacity sumps at Elevation 14'-0". Each of the two sumps provides suction to its individual residual heat removal pump through a 14-inch diameter pipe. (See Section 6.2)

Emergency Containment Filtering System

Three emergency containment filtering units have been added. (See Section 6.3)

Safety Injection System Trip Signal

The actuating signal for the Safety Injection System is any of the following signals:

a. Two out of three high containment pressure (approximately 10% design pressure).

b. Two out of three low pressurizer pressure.

c. Two out of three steam line differential pressure (between steam generator header and main header) for any loop.

d. Two out of three high steam line flow in any steam line coincident with low T_{avg} (2/3) or low steam line pressure (2/3).

e. Manually

These signals Increase the initiation reliability and increase protection in the case of a steam line rupture. (See Sections 7 and 6.)

Containment Spray System Signal

The actuating signal for the Containment Spray System is revised to operate from two-out-of-three high and two-out-of-three containment high-high pressure signal channels. (See Sections 6 and 7.)

Rod Stop and Reactor Trip on Startup

The automatic rod stop signal is actuated by an overpower or overtemperature ΔT, and by an intermediate range flux level setting as well as by a power range flux level, and the reactor trip signal on start-up is supplied by a high flux level setting. (See Section 7.)

Isolation of the Control and Protection Systems

Isolation of the entire control and protection systems is increased to include all channels except those for the pressurizer level and steam generator level. (See Section 7.2)

Electrical System Design

The voltage class of many safeguards motors was changed from 460 volt to 4000 volt, and they were connected to 4160 volt buses. The emergency diesel generator power and voltage ratings for the original emergency diesel generators were 2500 kW (continuous rating) and 4160 volt, respectively.

Two emergency diesel generators were originally connected to an emergency power bus. This bus has been eliminated because a single failure on this bus would prevent the emergency power from supplying the engineered safety features equipment.

The reliability and capacity of the plant engineered safety features was improved by:

a) placing the engineered safety features equipment electrically closer to the offsite power supplies - namely to the startup transformers;

b) directly connecting the emergency diesel generators to the 4160 volt bus rather than by way of an emergency power bus;

c) providing emergency power cross-connections from the startup transformers;

d) providing backup power connection from the C-Bus; and

e) adding two additional emergency diesel generators and dedicating two emergency diesel generators to each unit (one per emergency power train). The existing emergency diesel generators were dedicated to Unit 3 and the new emergency diesel generators were dedicated to Unit 4. The new emergency diesel generators' power rating is 2874 kW (continuous rating).

Auxiliary Coolant System

Two component cooling headers provide a means to isolate certain passive failures (defined as a 50 gpm leak). A partition has been added to the component cooling surge tank. Each compartment is connected to one component cooling header. Following isolation of the headers, leakage in one header will not communicate through the tank to the intact header. Following addition of the CCW Head Tank, a leak in either header can reduce CCW system volume to the elevation of the CCW Surge Tank partition. Reduction of system inventory to that level will not affect the normal function of the CCW system as adequate inventory is retained to ensure that CCW pump NPSH requirements are satisfied in the non-leaking header.

Waste Disposal System

The waste disposal system has been designed as purely a waste process system, which includes demineralizers, monitor tanks, condensate tank and associated pumps. The system also includes equipment to prepare the waste for disposal. (See Section 11.1.)

Thermal Power Uprate

Appropriate sections of the UFSAR have been revised to reflect thermal power uprate. The thermal power uprate increased the original rating of 2200 Mwt to 2300 Mwt.

TABLE 1.4-1

COMPARISON OF DESIGN PARAMETERS

	TURKEY POINT #3 OR #4 FINAL REPORT	ROBINSON #2 FINAL REPORT	INDIAN POINT #2 FINAL REPORT	GINNA FINAL REPORT	REFERENCE LINE NO.
THERMAL AND HYDRAULIC DESIGN PARAMETERS					
Total Primary Heat Output, MWt	2200	2200	2758	1300	1
Total Core Heat Output, Btu/hr	7479×10^6	7479×10^6	9413×10^6	4437×10^6	2
Heat Generated in Fuel, %	97.4	97.4	97.4	97.4	3
Maximum Thermal Overpower	12%	12%	12%	12%	4
System Pressure, Nominal, psia	2250	2250	2250	2250	5
System Pressure, Minimum Steady Stats, psia	2220	2220	2220	2220	6
Hot Channel Factors					
Heat Flux, F	3.23	3.23	3.23	3.38	7
Enthalpy Rise, FΔll	1.77	1.77	1.77	1.77	8
DNB Ration at Nominal Conditions	1.81	1.81	2.00	2.15	9
Minimum DNBR for Design Transients	1.30	1.30	1.30	1.30	10
Coolant Flow					
Total Flow Rate, 1b/hr	101.5×10^6	101.5×10^6	136.3×10^6	67.3×10^6	11
Effective Flow Rate for Ht Transfer,1b/hr	97.0×10^6	97.0×10^6	$130. \times 10^6$	64.3×10^6	12
Effective Flow Area for Ht transfer,ft^2	41.8	41.8	51.4	27.0	13
Average Velocity Along Fuel Rods, ft.sec	14.3	14.3	15.4	14.7	14
Average Mass Velocity, lb/hr-ft^2	2.32×10^6	2.32×10^6	2.53×10^6	2.38×10^6	15
Coolant Temperatures, °F					
Nominal Inlet	546.2	546.2	543	551.9	16
Maximum Inlet Due to Instrumentation Error and Deadband, °F	550.2	550.2	547	555.9	17
Average Rise in Vessel, °F	55.9	55.9	53.0	49.5	18
Average Rise in Core	58.3	58.3	55.5	52	19
Average in Core	575.4	575.4	571.0	578.0	20
Average in Vessel	574.2	574.2	569.5	577.0	21
Nominal Outlet of Hot Channel	642	642	633.5	634.0	22
Average Film Coefficient, Btu/hr-ft^2-F	5400	5400	5790	5590	23
Average Film Temperature Difference, °F	31.8	31.8	30.3	26.9	24
Heat Transfer at 100% Power					
Active Heat Transfer Surface Area, ft^2	42,460	42,460	52,200	28,715	25
Average Heat Flux, Btu/hr-ft^2	171,600	171,600	175,600	150,500	26
Maximum Heat Flux, Btu/hr-ft^2	554,200	554,200	567,300	508,700	27
Average Thermal Output, kw/ft	5.5	5.5	5.7	4.88	28
Maximum Thermal Output, kw/ft	17.9	17.9	18.4	16.5	29

TABLE 1.4-1 (Continued)

	TURKEY POINT #3 OR #4 FINAL REPORT	ROBINSON #2 FINAL REPORT	INDIAN POINT #2 FINAL REPORT	GINNA FINAL REPORT	REFERENCE LINE NO.
Maximum Clad Surface Temperature at Nominal Pressure, °F	657	657	657	657	30
Fuel Central Temperature, °F					
Maximum at 100% Power	4150	4030	4090	3880	31
Maximum at Overpower	4400	4300	4380	4100	32
Thermal Output, kw/ft at Maximum Overpower	20.0	20.0	20.6	18.5	33
CORE MECHANICAL DESIGN PARAMETERS					
Fuel Assemblies					
Design	RCC Canless	RCC Canless 15x15	RCC Canless 15 x 15	RCC Canless 14 x 14	34
Rod Pitch, in.	0.563	0.563	0.563	0.556	35
Overall Dimensions, In.	8.426 x 8.426	8.426 x 8.426	8.426 x 8.426	7.763 x 7.763	36
Fuel Weight (as UO_2), pounds	176,000	175,400	216,000	118,727	37
Total Weight, pounds	225,000	225,400	276,000	150,750	38
Number of Grids per Assembly	7	7	9	9	39
Fuel Rods					
Number	32,028	32,0228	39,372	21,659	40
Outside Diameter, In.	32,028	32,028	39,372	21,659	41
Diametral Gap, mils	7.5,7.5,8.5	6.5,7.5,8.5	6.5	6.5	42
Clad Thickness, in.	0.0243	0.0243	0.0243	0.0243	43
Clad Material	Zircaloy	Zircaloy	Zircaloy	Zircaloy	44
Fuel Pellets					
Material	UO_2 Sintered	UO_2 Sintered	UO_2 Sintered	UO Sintered	45
Density (% of Theoretical)	94,93,92	94-92-91	94-92-91	92-90	46
Diameter, in.	0.3659,0.3659, 0.3649	0.3659	0.3669	0.3669	47
Length, in.	0.6000	0.6000	0.6000	0.6000	48
Rod Cluster Control Assemblies					
Neutron Absorber	5% Cd-15% In-80% Ag.	5% Cd-15% In-80% Ag.	5% Cd-15% In-80% Ag	5% d-5% In-80% Ag	49
Cladding Material	Type 304 SS-Cold Worked	Type 304 SS-Cold Worked	Type 304 Ss-Cold Worked	Type 304 SS-Cold Worked	50
Clad Thickness, in.	0.019	0.019	0.019	0.019	51
Number of Clusters	45	53	61	29	52
Number of Control Rods per Cluster	20	20	20	16	53
Core Structure					
Core Barrel I.D./O.D., in.	133.875/137.875	133.875/137.875	148.0/152.5	109.0/112.5	54
Thermal Shield I.D./O.D., in.	142.625/148.0	142.625/148.0	158.5/164.0	115.3/122.5	55
FINAL NUCLEAR DESIGN DATA					
Structural Characteristics					
Fuel Weight (As UO_2), lbs.	176,000	175,400	216,000	118,727	56
Clad Weight, lbs	34,900	36,300	44,600	22,440	57
Core Diameter, in. (Equivalent)	119.5	119.5	132.5	96.5	58

TABLE 1.4-1 (Continued)

	TURKEY POINT #3 OR #4 FINAL REPORT	ROBINSON #2 FINAL REPORT	INDIAN POINT #2 FINAL REPORT	GINNA FINAL REPORT	REFERENCE LINE NO.
Core Height, in. (Active Fuel)	144	144	144	144	59
Reflector Thickness and Composition					
Top - Water plus Steel, in.	10	10	10	10	60
Bottom - Water plus Steel, in	10	10	10	10	61
Side - Water plus Steel, in.	15	15	15	15	62
H_2O/U, (Cold Volume Ratio)	4.18	4.18	4.18	4.08	63
Number of Fuel Assemblies	157	157	193	121	64
UO_2 Rods per Assembly	204	204	204	179	65
Performance Characteristics					
Loading Technique	3 region, non-uniform	3 region, non-uniform	3 region, non-uniform	3 region, non-uniform	66
Fuel Discharge Burnup, MWD/MTU					
Average First Cycle	13,000	13,000	14,200	14,126	67
Equilibrium Core Average	24,500	24,500	24,700	24,400	68
Feed Enrichments, w/o					
Region 1	1.85	1.85	2.2	2.44	69
Region 2	2.55	2.55	2.7	2.78	70
Region 3	3.10	3.10	3.2	3.48	71
Equilibrium	3.10	3.10			
Control Characteristics					
Effective Multiplication (Beginning of life)					
Cold, No Power, Clean	1.180	1.180	1.257	1.188	72
Hot, No Power, Clean	1.138	1.138	1.199	1.137	73
Hot, Full Power, Xe and Sm Equilibrium	1.077	1.077	1.152	1.080	74
Rod Cluster Control Assemblies					
Material	5% Cd-15% In-80% Ag	5% Cd-15% In-80% Ag	5% Cd-15% In-80% Ag	5% Cd-15% In-80% Ag	75
Number of RCC Assemblies	45	53	61	33	76
Number of Absorber per RCC Assembly	20	20	20	16	77
Total Rod Worth	See Table 3.2.1-3	See Table 3.2.1-3	See Table 3.2.1-3	6.8%	78
Boron Concentrations					
To shut reactor down with no rods Inserted, clean(k_{eff}=.99) Cold/hot	1250 ppm/1210 ppm	1250 ppm/1210 ppm	1480 ppm/1370 ppm	1630 ppm/1580 ppm	79
To control at power with no rods inserted, clean/equilibrium xenon and samarium	1000 ppm/670 ppm	1000 ppm/920 ppm	1200 ppm/780 ppm	1470 ppm/1100 ppm	80
Boron worth, Hot	7.3 δk/k	7.3 δk/k	1% δk/k / 89 ppm	1% δk/k / 120 ppm	81
Boron worth, Cold	5.6 δk/k	5.6 δk/k	1% δk/k / 72 ppm	1% δk/k / 90 ppm	82

TABLE 1.4-1 (Continued)

	TURKEY POINT #3 OR #4 FINAL REPORT	ROBINSON #2 FINAL REPORT	INDIAN POINT #2 FINAL REPORT	GINNA FINAL REPORT	REFERENCE LINE NO.
Kinetic Characteristics					
Moderator Temperature Coefficient	$+0.3x10^{-4}$to$-3.5x10^{-4}$ δk/k/°F	$+0.3x10^{-4}$to$-3.5x10^{-4}$ δk/k	$-0.3x10^{-4}$ to $-3.0x10^{-4}$ δk/k/°F	$+0.3x10^{-4}$to$-3.5x10^{-4}$ δk/k/°F	83
Moderator Pressure Coefficient	$-0.3x10^{-6}$to$3.4x10^{-6}$ δk/k/psi	$-0.3x10^{-6}$to$3.5x10^{-6}$ δk/k/psi	$+0.3x10^{-6}$ to $+0.3x10^{-6}$ δk/k/psi	$-0.3x10^{-6}$to$3.5x10^{-6}$ δk/k/psi	84
Moderator Void Coefficient	$+0.5x10^{-3}$to$-2.5x10^{-3}$ δk/k/ %void	$+0.5x10^{-3}$to$-2.5x10^{-3}$ δk/k/ % void	+0.03to-0.30 δk/g/cm	-0.10 to+0.30 δk/g/cm	85
Doppler Coefficient	$-1x10^{-5}$to $-1.6x10^{-5}$ δk/k/°F	$-1x10^{-5}$to$-1.6x10^{-5}$ δk/k/°F	$-1.1x10^{-5}$to $+1.8x10^{-5}$ δk/k/°F	$-1.0x10^{-5}$to$-1.6x10^{-5}$ δk/k/°F	86
REACTOR COOLANT SYSTEM - CODE REQUIREMENTS					
Component	Codes				
Reactor Vessel	ASME III Class A	ASME III Class A	ASME III Class A	ASME Class A	87
Steam Generator					
Tube Side	ASME II Class A	ASME III Class A	ASME III Class A	ASME III Class A	88
Shell Side	AMSE III Class C	ASME III Class C	ASME III Class C	ASME III Class A	89
Pressurizer	ASME III Class A	ASME III Class A	ASME III Class A	ASME III Class A	90
Pressurizer Relief Tank	ASME III Class C	ASME III Class C	ASME III Class C	ASME III Class C	91
Pressurizer Safety Valves	ASME III	ASME III	ASME III	ASME III	92
Reactor Coolant Piping	USAS B31.1	USAS B31.1	USAS B31.1	USAS B31.1	93
PRINCIPAL DESIGN PARAMETERS OF THE REACTOR COOLANT SYSTEM					
Reactor Primary Heat Output, MWt	2200	2200	2758	1300	94
Reactor Primary Heat Output, Btu/hr	7508×10^6	7508×10^6	9413×10^6	4437×10^6	95
Operating Pressure, psig	2235	2235	2235	2235	96
Reactor Inlet Temperature	546.2	546.2	543	551.9	97
Reactor Outlet Temperature	602.1	602.1	596	601.4	98
Number of Loops	3	3	4	2	99
Design Pressure, psig	2485	2485	2485	2485	100
Design Temperature, °F	650	650	650	650	101
Hydrostatic Test Pressure (Cold), psig	3107	3107	3100	3110	102
Coolant Volume,including pressurizer,cu.ft.	9088	9088	12,600	6245	103
Total Reactor Flow, gpm	268,500	268,500	358,800	180,000	104

TABLE 1.4-1 (Continued)

	TURKEY POINT #3 OR #4 FINAL REPORT	ROBINSON #2 FINAL REPORT	INDIAN POINT #2 FINAL REPORT	GINNA FINAL REPORT	REFERENCE LINE NO.
PRINCIPAL DESIGN PARAMETER OF THE REACTOR VESSEL					
Material	SA-302 Grade B, low alloy steel, internally clad with austenitic stainless steel	SA-302 Grade B, low alloy steel, internally clad with austenitic stainless steel	SA-302 Grade B, low alloy steel, internally clad with austenitic stainless steel	SA-302 Grade B, low alloy steel, internally clad with austenitic stainless steel	105
Design Pressure, psig	2485	2485	2485	2485	106
Design Temperature, °F	650	650	650	650	107
Operating Pressure, psig	2235	2235	2235	2235	108
Inside Diameter of Shell, in.	155.5	155.5	173	132	109
Outside Diameter Across Nozzles, in.	236	236	262 -7/16"	219 5/lo	110
Overall Height of Vessel & Enclosure Heat, ft-in.	41-6	41-6	43' 9-11/16"	39' 1-5/16"	111
Minimum Clad Thickness, in.	5/32	5/32	7/32	5/32	112
PRINCIPLE DESIGN PARAMETERS OF THE STEAM GENERATORS					
Number of Units	3	3	4	2	113
Type	Vertical U-Tube with integral-moisture separator	Vertical U-Tube with integral-moisture separator	Vertical U-Tube integral-moisture separator	Vertical U-Tube with integral-moisture separator	114
Tube Material	Inconel	Inconel	Inconel	Inconel	115
Shell Material	Carbon Steel	Carbon Steel	Carbon Steel	Carbon Steel	116
Tube Side Design Pressure, psig	2485	2485	2485	2485	117
Tube Side Design Temperature, °F	650	650	650	650	118
Tube Side Design Flow, lb/hr	33.93×10^6	33.93×10^6	34.07×10^6	33.63×10^6	119
Shell Side Design Pressure, psig	1085	1085	1085	1085	120
Shell Side Design Temperature, °F	556	556	556	556	121
Operating Pressure, Tube Side,Nominal psig	2235	2235	2235	2235	122
Operating Pressure,Shell Side,Maximum,psig	1020	1020	1005	989	123
Maximum Moisture at Outlet at Full Load,%	1/4	1/4	1/4	1/4	124
Hydrostatic Test Pressure, Tube Side (Cold), psig	3107	3110	3110	3110	125
PRINCIPAL DESIGN PARAMETERS OF THE REACTOR COOLANT PUMPS					
Number of Units	3	3	4	2	126
Type	Vertical, single stage radial flow with bottom suction and horizontal discharge	Vertical, single stage radial flow with bottom suction and horizontal discharge	Vertical, single stage radial flow with bottom suction and horizontal discharge	Vertical, single stage radial flow with bottom suction and horizontal discharge	127
Design Pressure, psig	2485	2485	2485	2485	128
Design Temperature, °F	650	650	650	650	129
Operating Pressure, Nominal, psig	2235	2235	2235	2235	130

TABLE 1.4-1 (Continued)

	TURKEY POINT #3 OR #4 FINAL REPORT	ROBINSON #2 FINAL REPORT	INDIAN POINT #2 FINAL REPORT	GINNA FINAL REPORT	REFERENCE LINE NO.
Suction temperature, °F	546.5	546.5	556	551.9	131
Design Capacity, gpm	89,500	89,500	90,000	90,000	132
Design Head, ft	260	260	252	252	133
Hydrostatic Test Pressure (cold), psig	3107	3107	3110	3110	134
Motor Type	A-C Induction single speed,	A-C Induction single speed, air cooled	A-C Induction single speed, air cooled	A-C Induction single speed,	135
Motor Rating (nameplate)	6000 HP	6000 HP	6000 HP	6000 HP	136
PRINCIPAL DESIGN PARAMETERS OF REACTOR COOLANT PIPING					
Material	Austenitic SS	Austenitic SS	Austenitic SS	Austenitic SS	137
Hot Leg - I.D., in.	29	29	29	29	138
Cold Leg - I.D., in.	27-1/2	27-1/2	27-1/2	27-1/2	139
Between Pump and Steam Generator-I. D. in.	31	31	31	31	140
Design Pressure, psig	2485	2485	2486	2486	141

LINE ITEM COMPARISON

H. B. ROBINSON #2 - TURKEY POINT #3&#4 - INDIAN POINT #2 - GINNA

Line Item	Notes
1.	Nominal reactor power level intermediate between Indian Point #2 and Ginna plants. Power level related to safety only in the ability to produce and remove the power in the core as designed.
2.	Directly related to Item 1 by conversion
3.	No change in the fraction of the total heat generated in the core.
4.	This limitation applies only to prevention of temperatures of the fuel rods and coolant corresponding to power in excess of this overpower limit. As demonstrated by the detailed examination of the rod withdrawal accident at power, presented in Section 14, nuclear overpower can be 18 percent without exceeding this limit. The primary consideration in overpower protection is not the actual value of the trip set point but rather the error allowances that make up the margin to trip. The set point is selected so that a minimum DNB ratio of 1.30 is maintained at the condition of the maximum overpower when all errors are taken in the adverse direction and with the most adverse pressure and temperature allowed by the high ΔT trip. The combination of these protection channels (variable high ΔT and overpower) limit the range of allowable conditions to a region of temperature, pressure and power which preclude DNB or core damage for credible accidents.

Line Item	Notes
	The error allowances are subject to verification by performance tests of the installed system. The errors due to drift and set point reproducibility are errors quoted by many instrumentation manufacturers and are demonstrated in actual performance tests on the equipment before shipment. The improved performance is attributable to the use of a solid state system.
	The errors due to rod motion result from variations in axial flux distribution with rod motion. Because of this variation, ion chamber reading at a given axial location may differ for the same core average power level. These errors are reduced by the use of long ion chambers with top and bottom detectors, each equal in length to about one-half the core height. The detectors yield an average reading over one-half the axial length.
5,6	The reactor coolant system design pressure for the four plants is 2500 psia. For all conditions the system pressure is limited by code safety valves set to open at design pressure and sized to prevent system pressure from exceeding code limitations. Equipment capabilities for overpressure protection are established by the complete loss of load without an immediate reactor trip. The maximum over-pressure for this transient is therefore a function of the safety valve capacity and the maximum pressurizer surge rate and is not dependent on the value of the nominal operating pressure.

Line Item	Notes
	The operating pressure is selected to ensure that desired thermal conditions are maintained in the core. The operating pressure is established and maintained between the upper and lower reactor trip limits to permit transient variations in either direction with the assistance of the Pressure Control System.
7,8	There are no significant differences among the hot channel factors. For a detailed discussion, see Section 3.2.2.
9.	The differences in the DNBR at nominal conditions is due to the slight differences in operation conditions.
10.	Same for all plants.
11.	The flow varies from plant to plant due to pump design and number of loops.

Line Item	Notes
12.	The effective flow rate for heat transfer is essentially proportional to the total flow rate as determined by the core geometry.
13.	Effective flow area for heat transfer is determined by the mechanical design of fuel assemblies and core.
14-24	There are no significant changes for these parameters from the previous plants.
25.	The active surface area is determined by the mechanical design of the core.
26-29	The heat transfer parameters are determined by the required heat output, the heat transfer surface area and the design peaking factors for the core. They are related to clad integrity in that these conditions must be within the capability of the fuel and must also meet the thermal- hydraulic design criteria of DNB and fuel temperature. Extensive experience indicates that no problem exists at these thermal outputs.
30.	Same for all plants.
31-32	The fuel central temperatures are not significantly different than those for the other plants. The temperatures are well below the UO_2 melting temperature of 4800°F.
33.	The overpower linear power density is similar to that of Indian Point No. 2 and is still well within the fuel capability.

Line Item	Notes
34-36	The fuel assembly design is not significantly changed with respect to type, rod pitch and overall dimensions.
37.	The total amount of fuel utilized is primarily a function of the nominal power rating.
38.	The total weight of each fuel assembly includes the weight of the fuel, clad, grids, RCC guide tubes, and top and bottom nozzles.
39.	The number of grids per assembly is primarily a function of the core length and the average coolant velocity along the fuel rods.
40.	The total number of fuel rods is consistent with the fuel assembly design and number of fuel assemblies.
41-44	Same for all plants.
45-48	The design of the fuel pellets is not substantially different except that the pellets are reduced as a result of the use of pressurized helium in the gap between pellets and cladding.
49-53	The rod cluster control design is the same for all four plants. The number of RCC assemblies for each plant is determined based upon the control requirements.
54-55	The core barrel and thermal shield diameters are consistent with the core diameter.
56-57	The same comments as for line items 37 and 38 apply here.

Line Item	Notes
58.	The core equivalent diameter is primarily a function of the nominal power rating.
59-62	Same for all plants.
63.	The water to uranium ratio is equivalent to that of Indian Point #2 and Turkey Point #3 and #4. The Ginna ratio is slightly lower because of the different fuel element geometry.
64.	The number of fuel assemblies required is primarily a function of nominal power rating.
65.	The number of fuel rods per assembly is primarily a function of core diameter and determined by use of 15 x 15 rather than 14 x 14 lattices. Any fuel assembly can be placed over an in-core instrumentation penetration and can accept a neutron flux probe.
66.	The core loading procedures are the same.
67-68	The average first cycle and first burnups are not significantly different but are affected by the burnable poison.
69-71	The core enrichment requirements do not vary significantly among all plants.
72-74	The beginning-of-life effective multiplications are not significantly different.
75-77	The same comments as for Line Items 49, 50 and 51 apply here.
78.	The total control rod worth is not significantly different.

Line Item	Notes
79-82	The boron requirements for reactor shutdown and control are primarily a function of core life and temperature.
83-86	With the use of burnable poison, the moderator temperature coefficient is always negative throughout core life at power operating conditions. The pressure coefficient, the moderator void (density) coefficient and the Doppler coefficient are not significantly different.
87-92	Section III of the ASME Boiler and Pressure Vessel Code is considered to be the better design guide because it has significantly upgraded Section VIII and its associated Nuclear Code Cases. It presents the latest skills in the analytical techniques of pressure vessel design and improved knowledge of pressure vessel failure patterns.
93.	The code requirements for piping design are the same for all plants.
94-95	Comments are the same as for Line Items 1 and 2
96.	Comments are the same as for Line Items 5 and 6.
97-98	There is no significant change.
99.	The number of coolant loops used are a function of the capability of the primary and secondary hardware.
100-101	The reactor coolant system design pressure and temperature are the same.

Line Item	Notes
102.	The hydro test pressure is essentially the same.
103.	The reactor coolant system volume is primarily a function of the number of loops and the component arrangement, practically proportional to the nominal power rating.
104.	The same comment as for Line Item 11.
105-107	Same for all plants.
108.	Same comment as for Line Items 5 and 6.
109-111	The physical dimensions of the reactor vessel are consistent with the core size.
112.	The reactor vessel clad thickness is the same for all plants.
113-118	The steam generator design bases are the same. The number of generators is consistent with the number of coolant loops.
119.	This is the value of reference line 11 divided by the number of loops for each plant.
120-122	Same for all plants.
123.	The shell side maximum operating pressure corresponds to the steam pressure at no load.
124-125	Same for all plants.

Line Item	Notes
126-130	The type of reactor coolant pump (shaft seal) and the design conditions are the same. The number of pumps is consistent with the number of reactor coolant loops.
131.	There is not significant change in the suction temperature to the pumps.
132.	The pump capacities are practically the same.
133.	The design head of the pumps meets the requirements of the component and piping pressure losses of each plant.
134.	Same for all plants.
135-136	The type and design of the pump motors is the same.
137-140	The reactor coolant piping is essentially the same. The hot leg pipe diameter is designed to maintain the same flow velocity limitation (<50 ft/sec) as used in the other plants. The pipe between the steam generator and the pump is designed to meet the allowable velocity limits at the pump inlet.
141.	The piping design pressure is the same as that for other components of the Reactor Coolant System.

1.5 DESIGN HIGHLIGHTS

The design of Turkey Point Units 3 and 4 is based upon proven concepts which have been developed and successfully applied in the construction of pressurized water reactor system. In subsequent paragraphs, a few of the design features are listed which represent slight variation or extrapolations from other units, such as San Onofre and Connecticut-Yankee, which were operating at the time of the original license application.

1.5.1 POWER LEVEL

The license application power level of 2200 MWt was larger than the capability of the Connecticut Yankee plant and represented a reasonable increase over power levels of pressurized water reactors operating at the time of the original Turkey Point license application. The capability of the nuclear steam supply system (NSSS) to operate at a thermal uprate core power level of 2300 MWt was verified in accordance with guidelines contained in the Westinghouse Topical Report WCAP-10263 (Reference 1); this core power uprate methodology was similarly followed by the North Anna, Salem, Indian Point 2, Callaway, and Vogtle plants for their core power upratings.

1.5.2 REACTOR COOLANT LOOPS

The Reactor Coolant System for the Turkey Point Units 3 and 4 consists of three loops as compared with four loops for Connecticut-Yankee. The use of three loops for the production of 2300 MWt requires an attendant increase in the size and capacity of the Reactor Coolant System components such as the reactor coolant pumps, piping and steam generators. These increases represent reasonable engineering extrapolations of existing proven designs.

1.5.3 PEAK SPECIFIC POWER

The design rating (≈15 kw/ft)is slightly lower than that licensed in CVTR (17 kw/ft) and that of Saxton (19.1 kw/ft). The maximum overpower condition is 22.0 kw/ft (118%) compared to 20 kw/ft (118%) for CVTR.

1.5.4 FUEL ASSEMBLY DESIGN

The fuel assembly design incorporates the rod cluster control concept in a canless assembly utilizing a grid spring to provide support for the 15 x 15 array of fuel rods. This concept incorporates the advantages of the Yankee canless fuel assembly and the Saxton grid spring with the rod cluster control scheme. Extensive out-of-pile tests have been performed on this concept and operating experience is available from the San Onofre and Connecticut-Yankee plants.

1.5.5 ENGINEERED SAFETY FEATURES

The engineered safety features provided are of the same types provided for the Connecticut-Yankee plant augmented by borated water injection accumulators. A Safety Injection System is provided which can be operated from emergency on-site diesel power. An Emergency Cooling and Filtering System is provided for post-loss-of-coolant conditions. A Containment Spray System provides cool, borated water spray into the containment atmosphere for additional cooling capacity.

1.5.6 EMERGENCY POWER

In addition to the multiple ties to offsite power sources, four emergency diesel generators are provided as emergency power supplies for the case of loss of offsite power. The emergency diesel generators are capable of operating sufficient safety injection and containment cooling equipment to ensure an acceptable post-loss-of-coolant pressure transient for any credible single failure.

1.5.7 EMERGENCY CONTAINMENT COOLING AND FILTERING SYSTEMS

Separate and independent cooling and filtering systems are provided to reduce containment pressure and airborne fission products respectively in the containment atmosphere following a loss-of-coolant accident. The three cooling units and three filtering units (2 of 3 are required) can be operated from emergency on-site diesel power.

1.5.8 REFERENCES

1. Topical Report, WCAP-10263, “A Review Plan for Uprating the Licensed Power of a Pressurized Water Reactor,” Westinghouse Electric Corporation.

1.6 RESEARCH AND DEVELOPMENT ITEMS

Research and development (as defined in Section 50.2 of the Code of Federal Regulations) was conducted regarding first cycle final core design details and parameters, analytical methods for kinetics calculations, safety injection (emergency core cooling) system, xenon stability, control systems and capability of reactor internals to resist blowdown forces.

1.6.1 INITIAL CORE DESIGN

The detailed core design and thermal-hydraulics and physics parameters have been finalized. The cycle one nuclear design, including fuel configuration and enrichments, control rod pattern and worths, reactivity coefficients and boron requirements are presented in Section 3.2.1 and the final thermal-hydraulics design parameters are in Section 3.2.2. Section 3.2.3 presents the fuel, fuel rod, fuel assembly and control rod mechanical design. The core design incorporates fixed burnable poison rods[1] in the initial loading to ensure a negative moderator reactivity temperature coefficient at operating temperature. This improves reactor stability and lessens the consequences of a rod ejection or loss of coolant accident. The mechanical design is presented in Section 3.2.3. Subsequent cycle specific values are calculated and reviewed prior to each cycle and are presented in Appendices 14A and 14B.

1.6.2 DEVELOPMENT OF ANALYTICAL METHODS FOR REACTIVITY TRANSIENTS FROM ROD EJECTION ACCIDENTS

A control rod ejection accident is not considered credible, since it would require the failure of a control rod mechanism housing. Nevertheless, the reactivity, and associated pressure and temperature transients for this accident have been analyzed.

Rod ejection analyses for this plant were originally performed using the CHIC-KIN code[2], which uses a point reactor kinetics model and a single channel fuel and coolant description. The CHIC-KIN code has been superceded by the TWINKLE computer code (Reference 7) which solves multi-dimensional two group transient diffusion equation using a finite differences technique. The rod ejection analysis results are given in Section 14.2 of this report, together with a brief description of the TWINKLE code.

Results for ejection of the highest worth rod at both beginning and end of core life and zero and full power are given in Section 14.2. These analyses show that the temperature and pressure transients associated with a rod ejection accident do not cause any consequential damage to the reactor coolant system.

The reactor core now contains fixed burnable poison rods or integral burnable poisons. These, by allowing a reduction in the chemical shim concentration, ensure that the moderator temperature coefficient of reactivity is always negative at 100 percent power operating conditions.

A positive moderator coefficient was expected at operating temperatures early in the first fuel cycle in the original core design. The burnable poison rods were borosilicate glass. Critical experiments have been conducted at the Westinghouse Reactor Evaluation Center using rods containing 12.8 w/o boron and Zircaloy clad UO_2 fuel rods, 2.27% enriched. These values are typical of this reactor also. These experiments showed that standard analytical methods can be used to calculate the reactivity worth of the burnable poison rods. The design basis and critical experiments are described in reference (1). In-core testing completed in the Saxton reactor has shown satisfactory performance of these rods.

The consequences of a rod ejection accident are now lessened because the moderator temperature coefficient of reactivity is mostly negative at operating conditions. In addition, the effects of rod ejection are inherently limited in this reactor in which boric acid chemical shim is employed since the control rods need only to be inserted sufficiently to handle load changes.

1.6.3 SAFETY INJECTION SYSTEM DESIGN

The design of the safety injection system is essentially that proposed at the time the construction permit was issued; that is, it includes nitrogen-pressurized accumulators to inject borated water into the reactor coolant system to rapidly and reliably reflood the core following a loss-of-coolant accident. Additional analyses have been performed to demonstrate that the accumulators in conjunction with other components of the emergency core cooling system can adequately cool the core for any pipe rupture. These analyses are presented in Section 14.3. The computer codes used for the blowdown phase of the loss-of-coolant accident take into account the accumulator injection.

Research and development work has also been performed on the integrity of Zircaloy-clad fuel under conditions simulating those during a loss-of-coolant accident. Under the conservatively evaluated temperatures predicted for the fuel rods during loss-of-coolant accident, the clad may burst due to a combination of fuel rod internal gas pressure and the reduction of clad strength with temperature. Burst cladding could block flow channels in the core, so that core cooling by the safety injection system would be insufficient to prevent fuel rod melting.

Rod burst experiments have therefore been conducted on Zircaloy rods. The results have been presented to the AEC in the Zion Station PSAR, Volume III. Analytical studies with the amounts of flow blockage obtained from the clad rupture geometry observed to date show that rod bursting during a loss-of-coolant accident does not preclude effective cooling of the core by the Safety Injection System.

1.6.4 SYSTEMS FOR REACTOR CONTROL DURING XENON INSTABILITIES

In the transition to large Zircaloy-clad-fuel cores, the potential of power spatial redistribution caused by instabilities in local xenon concentration was created.

Extensive analytical work has been performed on reactor core stability [3,4,5,6]. These indicate that a core of this size may be unstable against axial power redistribution, but is stable against transverse power oscillations. The reactor was therefore provided with instrumentation and control equipment which would allow the operator to detect and suppress the axial power oscillations.

Part-length control rods were provided to control axial oscillations and to shape the axial power distribution. These were found to be not needed, used nor assumed to be available to achieve reactor shutdown. Also, plant operation at power was not allowed with part-length control rods. Their removal does not cause any changes in the required reactor characteristics, nor safety margins at full power, low power nor shutdown. Therefore, the part-length control rods were removed and the manual control feature deleted. In the event of axial power imbalance exceeding operating limits, various levels of protection are invoked automatically. These include generation of alarms, turbine power cutback and blocking of control rod withdrawal (Section 7.2).

1.6.5 BLOWDOWN CAPABILITY OF REACTOR INTERNALS

The forces exerted on reactor internals and the core, following a loss-of-coolant accident, were originally computed by employing the BLODWN-2 digital computer program developed for the space-time-dependent analysis of multiloop PWR plants. The BLODWN-2 code has been superseded by the MULTIFLEX code. This newer program, the models used and the results are discussed in Section 14.3.3.

REFERENCES, Section 1.6

1) Wood, P.M., Baller, E.A., et al, "Use of Burnable Poison Rods in Westinghouse Pressurized Water Reactors," WCAP 7113 (October 1967), NON-PROPRIETARY.

2) Redfield, V.A., "CHIC-KIN...A Fortran Program for Intermediate and Fast Transients in a Water Moderated Reactor," WAPD-TM-479, (January 1, 1965).

3) Poncelet, C.G. and Christie, A.M., "Xenon Induced Spatial Instabilities in Large Pressurized Water Reactors," WCAP-368O-20, (March 1968), NON-PROPRIETARY.

4) McGaugh, J.D., "The Effect of Xenon Spatial Variations and the Moderator Coefficient on Core Stability," WCAP-2983, (August 1966), PROPRIETARY.

5) Westinghouse Report, "Power Distribution Control in Westinghouse PWR's," WCAP-7208, (October 1968), PROPRIETARY. The NON-PROPRIETARY version of this document is WCAP-7811.

6) Westinghouse Report, "Power Maldistribution Investigations", WCAP-7407-L, (January 1970), PROPRIETARY.

7) Risher, D.H. And Barry, R.F., “TWINKLE – A Multi-/dimensional Neutrons Kinetics Computer Code,” WCAP-7979-P-A (Proprietary), January 1975 and WCAP-8028-A (non-Proprietary) January 1975.

1.7 IDENTIFICATION OF CONTRACTORS

The information contained in this section pertains to the contractors who participated in the construction of Turkey Point Units 3 and 4. This information is for historical purposes only.

Turkey Point Units 3 and 4 are being supplied and constructed under two basic agreements. The first is between the Westinghouse Electric Corporation and Florida Power & Light Company in which Westinghouse has agreed to furnish the Nuclear Steam Supply Systems and associated auxiliary equipment, and the turbine generators with accessories, and technical services. The second is between the Bechtel Corporation and Florida Power & Light Company in which the Bechtel Corporation agreed to perform all phases of construction in accordance with the plans and engineering of Bechtel Associates. Bechtel procures all materials to complete the units.

Florida Power & Light Company reviews specifications, plans and engineering, and inspects and approves the construction.

Operation will be solely by Florida Power & Light Company using Westinghouse and Bechtel advisory and consulting service.

Florida Power & Light Company has engaged many consultants to conduct investigations and studies relative to the natural sciences and they are listed in Section 2.1. Further, Southern Nuclear Engineering, Inc, has been retained as a consultant on safety matters.

1.8 SAFETY CONCLUSIONS

The safety of the public and operation personnel and reliability of equipment and systems have been the primary considerations in the design. The approach taken in fulfilling the safety consideration is three-fold. First, careful attention has been given to the design so as to prevent the release of radioactivity to the environment under conditions which could be hazardous to the health and safety of the public. Second, the units have been designed so as to provide adequate radiation protection for personnel. Third, reactor systems and controls have been designed with a great degree of the redundancy and with fail-safe characteristics.

Based on the over-all design of the units including their safety features and the analyses of the possible incidents and of the hypothetical accident, it is concluded that Turkey Point Units 3 and 4 can be operated without undue risk to the health and safety of the public.

1.9 QUALITY ASSURANCE PROGRAM

The following Section 1.9 of this updated FSAR is reflective of the Quality Assurance Program applicable to the design, procurement, and construction of systems, components, and structures of Turkey Point Units 3 and 4 and is maintained here for completeness. Subsequent to the operating license, Florida Power & Light has established and implemented a Quality Assurance Program as described in the FPL Topical Quality Assurance Report which is in compliance with the requirements of Appendix B to 10 CFR 50 and approved by the NRC. Sections 1.9.3 through 1.9.7 represent historical descriptions of the QA program in place during the construction of the Turkey Point Units.

The system, components, and structures to which the Topical QA Report program is applicable were set forth in the Turkey Point Units 3 and 4 Q-List which was approved by Florida Power & Light Nuclear Engineering Department. FPL developed the Total Equipment Data Base (TEDB) in 1986 to expand the fields in the Plant Q-List. The Plant Q-List and the TEDB have been concurrently updated to reflect the latest as-built configuration. Both documents have been used in parallel since the development of the TEDB in 1986. The TEDB was not used as a sole source for design information until the Plant Q-List was replaced with the TEDB in 1990. The TEDB contains as-built and approved alternate information on a component level.

1.9.1 PURPOSE

The purpose of this program is to establish quality assurance requirements for those systems, components, and structures, herein identified, which by reason of their association with the safety requirement of the nuclear units have had criteria and design bases established for them in the A.E.C. license application. The program describes the organization, procedures, and actions taken by Florida Power & Light Company and its consultants, contractors and suppliers to assure that all applicable criteria and design bases have been correctly translated into specifications, plans, and drawings, and that the systems, components, and structures have been fabricated, erected, installed, and constructed in accordance with the design requirements.

1.9.2 APPLICABILITY

The systems and structures to which this program is applicable are set forth below. It is understood that such systems and structures include associated

tanks, pumps, valves, piping, controls, instruments, supports, enclosures, wiring, and power supplies. In general these systems, components, and structures have a vital role in the prevention or mitigation of the consequences of accidents which could cause risk to the health and safety of the public.

1. Reactor Coolant System
   Reactor vessel
   Reactor vessel internals
   RCC assemblies and drive mechanisms
   Steam generators
   Reactor coolant pumps
   Pressurizer and relief tank
   All reactor coolant piping, plus any other lines carrying reactor coolant under pressure

2. Containment System
   Containment structure including polar crane
   Containment penetrations and cooling systems including personnel and equipment access penetrations
   All lines penetrating the containment, up to and including the first isolation valves

3. Main Steam and Feedwater Lines within the Containment

4. Main Steam Safety, Isolation and Atmospheric Dump Valves

5. New Fuel Storage Facilities

6. Auxiliary Feedwater System
   Auxiliary feedwater pumps and turbine drivers
   Condensate storage tank
   Steam, condensate and feedwater lines of auxiliary feedwater system

7. Emergency Diesel Generators, Day Tanks and Storage Tanks and Associated Starting Equipment

8. Containment Polar Crane and Rail Support (Unloaded)

9. Refueling Water Storage Tanks

10. Emergency Containment Cooling and Filtering Units

11. Intake Cooling Water Systems
    Intake structure and crane supports
    Intake cooling water pumps and motors
    Intake cooling water piping, from pumps to component cooling water heat exchanger inlets

12. Component Cooling System
    Component cooling heat exchangers
    Component cooling pumps and motors
    Residual heat removal pumps and motors (low-head safety injection pumps)
    Residual heat removal heat exchanges
    Component cooling surge tanks
    Component cooling head tank

13. Spent Fuel Storage Facilities
    Spent fuel pit and racks
    Spent fuel pit pump and motor
    Spent fuel pit heat exchanger
    Spent fuel pit demineralizer

14. Safety Injection System
    Containment spray pumps and motors
    Low-head safety injection pumps and motors (residual heat removal pumps)
    High-head safety injection pumps and motors
    Containment spray headers
    Accumulator system
    Containment recirculation sumps

15. Chemical and Volume Control System
    Charging pumps
    Volume control tank
    Boric acid blender
    Boric acid tanks
    Boric acid transfer pumps
    Boric acid filters
    Heat exchangers
    Primary water storage tank

16. Fuel Transfer Tube

17. Motor-Driven Fire Pumps

18. Instrument Air System
    Dryers
    Receivers

19. Auxiliary Building Exhaust System

20. Control Building Ventilating System

21. Fuel Handling System

22. Vessel and Internals Lifting Devices

23. Electrical System

1.9.3 ORGANIZATION

Charts of the Turkey Point Quality Assurance organization are attached hereto as Figures 1.9-1, 1.9-2 and 1.9-3. Responsibility for quality assurance rests with Florida Power & Light Company's Vice President of Power Plant Engineering and Construction. Reporting to him is the Manager of Power Plant Engineering who is responsible for administration of all Florida Power & Light Company power plant engineering functions. A project Manager has been assigned to the Turkey Point Units No. 3 and 4 project. The

Project Manager administers all detailed activities of the project and he is responsible for review of all design documents such as drawings, specifications, procedures, and the Final Safety Analysis Report. He is assisted in his review by a full-time project engineer and by on-site quality assurance engineers. He can call upon specialized engineering services such as electrical, control, relay, cathodic protection, production, water chemistry, and environmental as necessary. Quality assurance problems referred to him from the field by Florida Power & Light quality assurance engineers are handled directly with Bechtel's Project Engineer or with Westinghouse's Project Manager. Should any matters not be resolved to his satisfaction, the matter is taken up with the Manager of Power Plant Engineering in the case of an engineering subject or with the Construction Superintendent in case of a construction subject. The ultimate authority for quality rests with Florida Power & Light Company's Vice President who can implement any quality assurance measures required.

The effectiveness of the quality assurance program is continuously reviewed by Florida Power & Light Company's Vice President through his executive assistant.

Westinghouse Electric Corporation is responsible for performance of quality control and quality assurance functions on components within its scope of supply, the nuclear steam supply with its associated auxiliary systems. The Westinghouse Quality Assurance Plan is given in Appendix 1A.

Bechtel Corporation as agent for Florida Power & Light Company is responsible for quality control and quality assurance for those systems components and structures within its scope of supply. Bechtel is responsible for assuring that its system and structures are compatible with the nuclear steam supply system. Bechtel is responsible for quality control and quality assurance in the erection of the nuclear steam supply system, and these actions are monitored by both Westinghouse and Florida Power & Light Company. As agent for Florida Power & Light Company, Bechtel monitors the quality assurance program of Westinghouse during shop fabrication of components.

Shop inspection by Bechtel is performed by the Inspection Department which is an organization independent of engineering, project, and construction departments. Inspection requirements are established by Bechtel design group supervisors assigned to the projects.

Site quality control is the responsibility of the construction group through the Job Engineer. Quality control is monitored by the Quality Assurance Engineer who reports to the Project Engineer and is thus independent of construction forces. Independent testing laboratories (such as Pittsburgh Testing Laboratories in the case of concrete and rebar) perform testing and inspection functions and report to the Quality Assurance Engineer.

The Welding Engineer reports to construction supervisors for work assignments, but the technical requirements of his work are established by Bechtel's Metallurgy and Quality Control Department, an organization which is independent of all Bechtel construction divisions. The welding procedures, for

example, are established and qualified by this department. The Welding Engineer's work is monitored by periodic visits from Bechtel's Chief Welding Engineer, as well as by the Quality Assurance Engineer and Florida Power & Light Company.

Florida Power & Light Company quality assurance engineers monitor all quality control and quality assurance activities taking place on site. The quality assurance engineers utilize checklists to guide the nature and extent of monitoring requirements. Florida Power & Light Company monitors Bechtel inspection staffing, documents, quality control procedures, tests, test equipment calibrations, inspection and testing frequency, personnel qualifications, material control, and storage and protection. All design documents are received by them and are maintained for their use.

1.9.4 SCOPE

The quality assurance program includes procedures and activities in the following areas:

1. Design and procurement
   a. Correct translation of regulations, criteria, and basis into detailed design
   b. Review of design
   c. Design changes
   d. Design interfaces
   e. Procurement documents
   f. Design documents
   g. Document control

2. Shop fabrication of purchased material
   a. Inspection requirements
   b. Inspection procedures
   c. Acceptance criteria
   d. Inspection reports

3. On-site construction, erection, and installation
   a. Materials control
   b. Materials storage and protection

c. Inspection
d. Testing
e. Welding
f. Calibration
g. Special procedures and instructions
h. Records
i. Inspection, test and operating status
j. Non-conforming materials

Procedures governing preoperational checkout and startup testing are described in Section 13, as are procedures for operation including fueling.

1.9.5 DESIGN AND PROCUREMENT

Criteria, regulations, and design bases are translated into detailed designs by engineers in various disciplines assigned to the project. Assignments of engineers are made by Bechtel's Chief Mechanical, Civil, and Electrical Engineers, who remain responsible for the technical content of the job. Designs are reviewed by design group supervisors assigned to the project and by the Project Engineer. All design documents are transmitted to Florida Power & Light Company for review and comment and by contract must have Florida Power & Light Company approval before release for construction.

Design documents dealing with the interface between Bechtel-designed systems and structures and Westinghouse-supplied systems and components are transmitted by Bechtel to Westinghouse for review, comment, and approval. All Westinghouse design documents are sent to Bechtel for review and transmittal to Florida Power & Light Company. All Florida Power & Light Company comments on Westinghouse design documents are transmitted to Westinghouse through Bechtel.

Bechtel design documents are also reviewed by specialty groups serving all Bechtel projects, such as geology and soils engineering, and metallurgical and materials engineering and the Scientific and Technical group. Containment design was reviewed by a Task Force in Bechtel's home office responsible for conceptual design of containments on several Bechtel projects.

All nuclear project groups within the Bechtel Power and Industrial Division review design problems together by means of meetings and information exchanges. Nuclear project coordination is the responsibility of the Division Manager of Engineering, Mr. Harvey Brush.

All construction is accomplish through the use of the above-mentioned design documents. No deviations from the documents are permitted without documentation of the change and submission for review and approval by the Bechtel Project Engineer, Florida Power & Light Company, and Westinghouse. Document control is obtained through the periodic issuance of current print registers, status of purchase orders-specifications, and equipment lists.

All specifications are reviewed by the inspection department for inspection requirements. Procurement is made only from suppliers on Florida Power & Light Company approved bidders list. In addition, suppliers must be approved by the Bechtel Purchasing Department for current quality performance.

Design review meetings are held periodically between Bechtel, Westinghouse, and Florida Power & Light Company to discuss design problems and resolve interface responsibilities. Minutes of all meetings are published and submitted for approval and review of all parties.

A procedure manual has been established for the job which prescribes all documents, and transmitting, reviewing, and approving procedure manual also exists, for Bechtel-Westinghouse documentation, transmittal, review and approval.

1.9.6 SHOP FABRICATION QUALITY ASSURANCE

Bechtel as Florida Power & Light Company's agent performs periodic shop inspection during fabrication of components within Bechtel's scope and monitors Westinghouse shop quality assurance on components within their scope. Bechtel's activities are conducted in accordance with "Inspection Procedures - Bechtel Corporation Procured Items" and the Bechtel Shop Inspection Manual. Reports of all inspections are made to the Bechtel Project Engineer who transmits them for review to Florida Power & Light

Company. Florida Power & Light Company maintains files of inspection reports both in the General Office and in the field. All purchase orders require Bechtel inspection release prior to shipment. Inspection requirements are established by the project engineers and are required to include specific acceptance standards. Bechtel inspectors are full-time Bechtel employees operating on a regional basis and they do not perform expediting or other work.

Shop inspection reports are forwarded to the Bechtel field Quality Assurance Engineer who notes any unusual requirements such as work to be done at the site to make the component comply with requirements.

1.9.7 ON-SITE CONSTRUCTION, ERECTION, AND INSTALLATION

Quality assurance activities on-site are performed in accordance with the Bechtel Quality Assurance Manual, and in accordance with many specifications, procedures, and special instructions.

Material control is performed in accordance with the Bechtel Standard Purchasing Procedure Manual. All receiving, checking, warehousing, records and materials issuance is monitored by the Home Office purchasing department. Incoming material is identified in accordance with coding instructions contained in the procurement documents. The material is checked against the specifications and a "Material Received Report" is prepared and forwarded to Field Engineering. Field Engineering checks the material against the specifications and verifies the prior receipt of all supporting certificates and documentation. Non-complying material is specially marked. A QC-101, 102, or 103 form is prepared by Field Engineering and forwarded to the Quality Assurance Engineer for checking and permanent filing.

Inspection and testing is performed in accordance with codes, manuals, or special instructions depending on the subject matter. Inspector qualifications and requirements are monitored by Florida Power & Light Company. Inspection reports are checked by Florida Power & Light Company, and the Quality Assurance Engineer, and permanently filed. Test equipment calibration frequency is specified in procedures, calibration records are filed, and calibration is monitored by Florida Power & Light Company. As

as example of inspection, testing and documentation requirements on the job, a quality assurance package for concrete is given in Appendix 1B listing specifications, procedures, special instructions, and documentations.

Welding is performed in accordance with Bechtel Welding Standards, a document issued by the Metallurgical Department in Bechtel's Home Office. This document contains welding procedures, heat tracing procedures, and qualification certificates. Welder qualification is performed in accordance with the ASME code under the supervision of the Welding Engineer. Weld inspection requirements are spelled out in a Welding Inspection Procedure issued by Florida Power & Light Company, Bechtel, and Westinghouse. Documentation is maintained in the form of isometric drawings checked off, inspection reports, radiograph reports, and radiographs.

Non-destructive testing is performed in accordance with applicable codes. Radiography is performed in accordance with Bechtel specifications prepared specifically for the job.

Non-conforming material procedures include paint coding of rebar and tagging of equipment found unsatisfactory at receiving inspection.

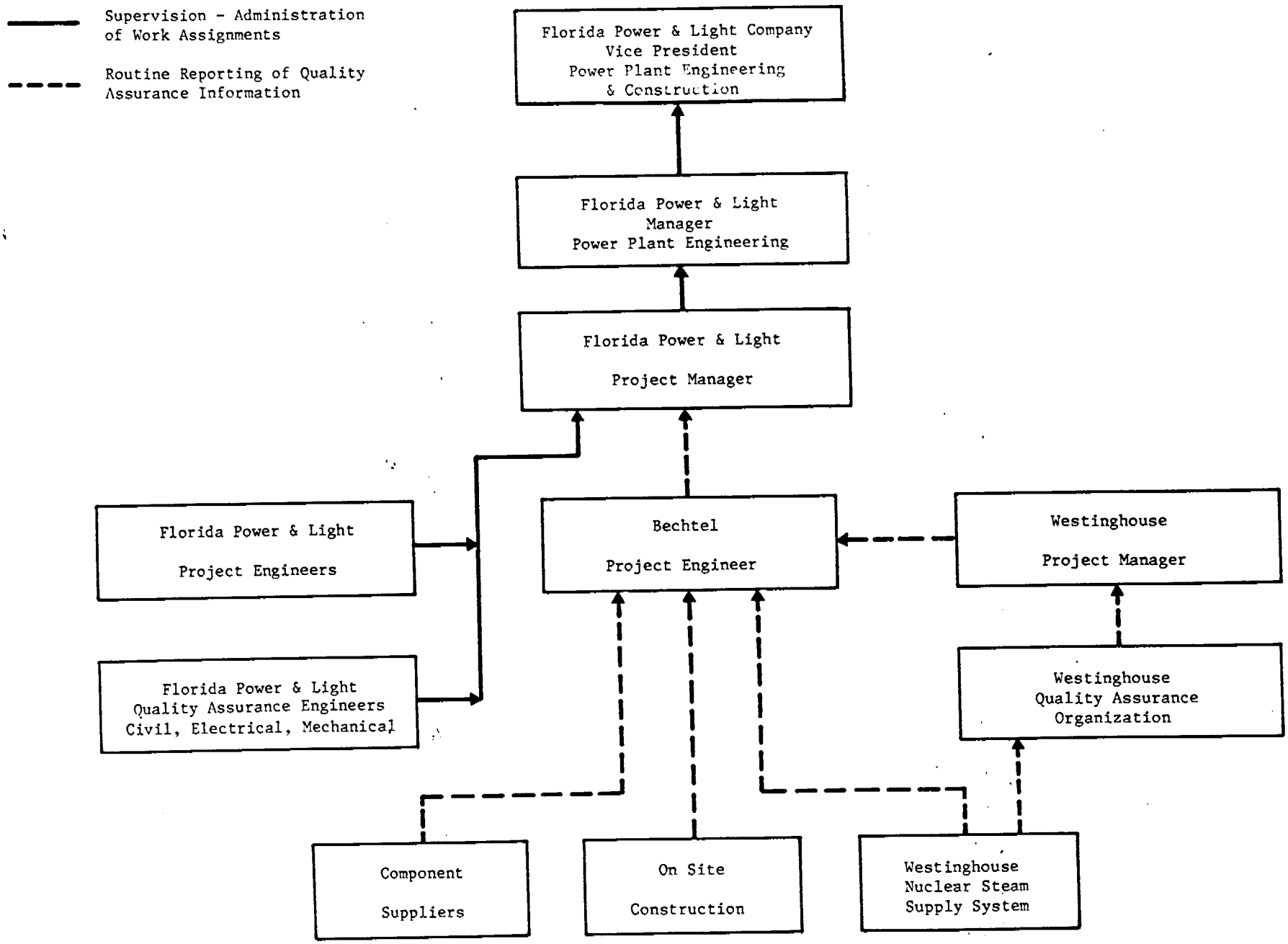

TURKEY POINT QUALITY ASSURANCE ORGANIZATION
FLORIDA POWER & LIGHT COMPANY
FIG. 1.9-1

TURKEY POINT UNITS 3 & 4
QUALITY ASSURANCE ORGANIZATION

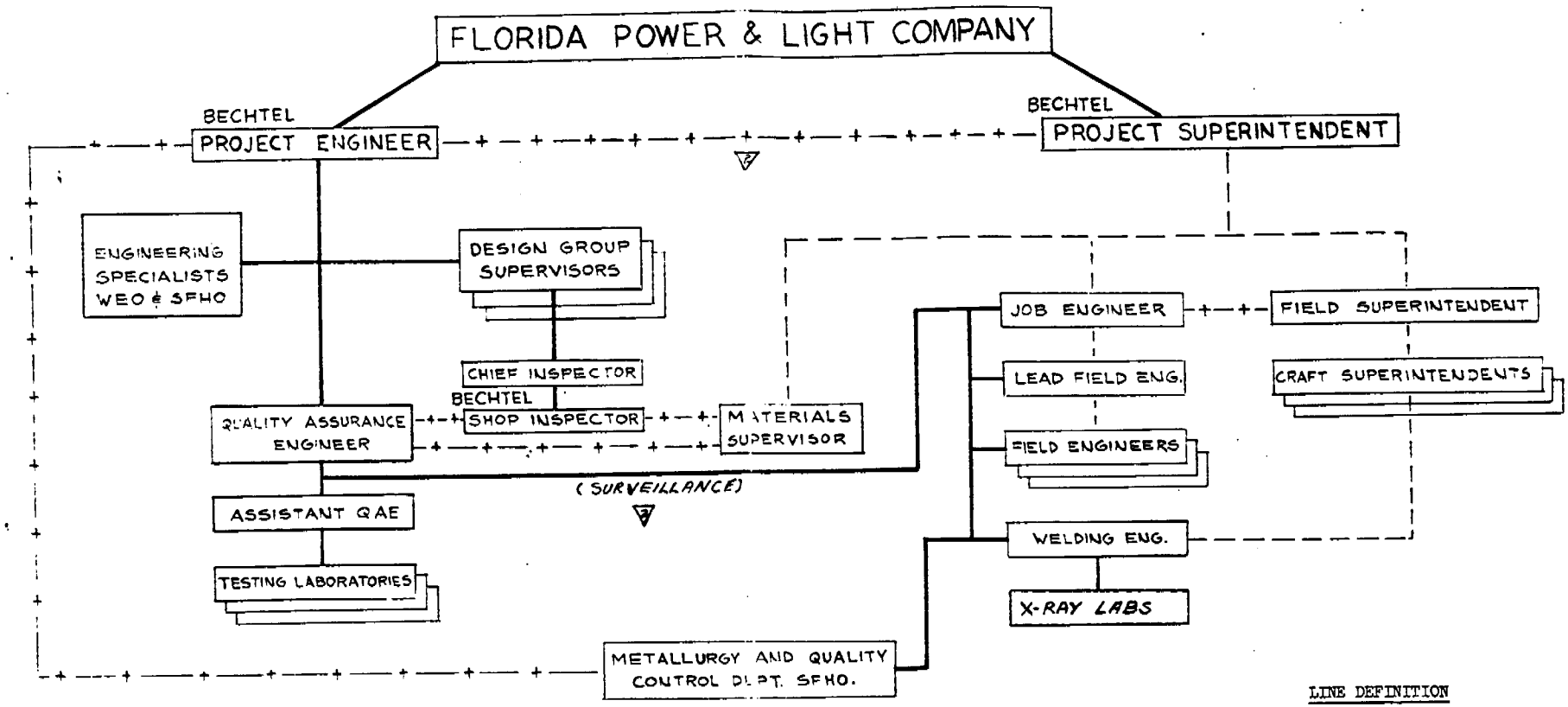

NOTE: THE FUNCTION OF THIS CHART IS STRICTLY FOR TECHNICAL PERFORMANCE OF QUALITY ASSURANCE

W.E.O. = WASHINGTON ENGINEERING OFFICE
S.F.H.O. = SAN FRANCISCO HOME OFFICE

LINE DEFINITION

FUNCTIONAL AUTHORITY: ADHERENCE TO TECHNICAL REQUIREMENTS ASSOCIATED WITH QUALITY CONTROL PROCESSES AND PRACTICES

COMMUNICATIONS: ROUTINE FLOW OF INFORMATION AND RECORDS AFFECTING QUALITY CONTROL

ADMINISTRATIVE AUTHORITY: CONTROL OVER WORK ASSIGNMENTS

QUALITY ASSURANCE ORGANIZATION

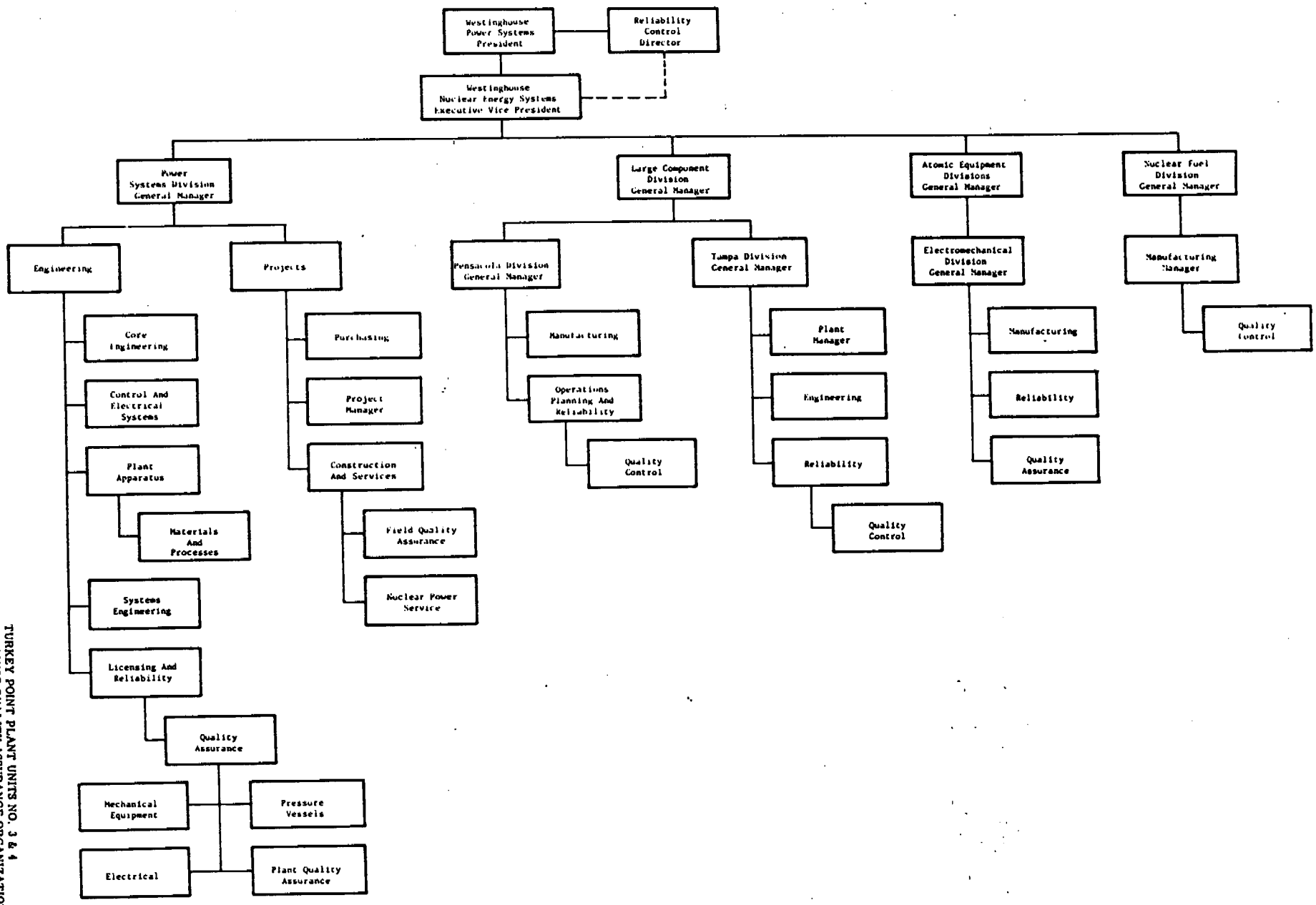

TURKEY POINT PLANT UNITS NO. 3 & 4
WESTINGHOUSE QUALITY ASSURANCE ORGANIZATION
FIG. 1.9-3

APPENDIX
1A

Westinghouse Power Systems Division
Quality Assurance Plan

WESTINGHOUSE PWR SYSTEMS DIVISION QUALITY ASSURANCE PLAN

QUALITY ASSURANCE PLANNING

Purpose

The Quality Assurance Plan of Westinghouse PWR Systems Division for the Nuclear Steam Supply System is set forth in this document. Its purpose is to describe the procedures and actions used by Westinghouse to assure that the design, materials and workmanship employed in the fabrication and construction of systems, components and installations within the Westinghouse scope of responsibility in a nuclear power plant are controlled and meet all applicable requirements of safety, reliability, operation and maintenance.

This plan is a requirement for, but is not necessarily limited to, those components and systems of the plant having a vital role in the prevention or mitigation of the consequences of accidents which can cause undue risk to the health and safety of the public. These include Class I items as described by the Safety Analysis Report.

Procedural Documents and Work Instructions

Written administrative and technical policies, procedures and instructions are in use in Westinghouse to implement the Quality Assurance Plan. They are in formats appropriate to their applications, such as:

- Management Responsibility Statements
- Position Descriptions of Management and Professional Personnel
- Engineering Instructions
- Quality Assurance and Reliability Procedures
- Quality Control Notices
- Quality Control Plans
- Projects Procedures
- Purchasing Manual Procedures
- Construction Site Procedures

Technical and contractual information to assure effective implementation of these policies and procedure is developed, documented and controlled through a standard Westinghouse system which consists in part of:

- System Design Parameters
- Equipment Specifications
- Corporate Process Specifications
- Corporate Material Test Specifications
- Corporate Purchasing Department Specifications (including specifications for materials)
- Drawings
- Purchase orders

Procedures are reviewed and revised on a continuing basis by the issuing authorities so that the procedures meet the needs for which they are intended. Management reviews performance in accordance with these procedures to assure compliance. Independent audits, as described later, provide objective assurance of both the adequacy of the procedures and compliance with them.

ORGANIZATION

Organization Chart

Figure 1 shows the functional organization as related to quality assurance of the Westinghouse Nuclear Energy Systems Divisions, including the staff review and surveillance function of the Reliability Controls Group at the Westinghouse Corporate level. The Westinghouse organization provides the checks and balances needed to foster an effective overall quality assurance program.

The authority and responsibility of the manager of each activity on this organization chart is set forth in writing in an approved state of management responsibility.

The PWR Systems Quality Assurance department consists of four sections: Mechanical Equipment, Pressure Vessels, Electrical, and Plant Quality Assurance. The Quality Assurance department has responsibility for supplier surveillance, audits of the nuclear steam supply scope at construction sites, and quality assurance data feedback and analysis, as described elsewhere in this Plan. Other Westinghouse divisions are organized for independence of a quality assurance function, as shown in Figure 1.

The corporate Director of Reliability Control, who reports to Westinghouse top management through an organizational path independent of the Executive Vice President of Nuclear Energy Systems, is responsible for the surveillance and auditing of the quality assurance effort carried out by all the divisions in Westinghouse Nuclear Energy Systems. The Director of Reliability Control utilizes the services of the PWR Systems Quality Assurance department in carrying out audits of other activities in Nuclear Energy Systems.

Functional Relationships, PWR Systems

PWR Systems Division id divided into a number of functional groups having both direct and indirect responsibility for aspects of the design, fabrication and construction phases of the project. Close association and interchange of information at all levels exists among the functional groups.

The table of Figure 2 illustrates the relationships among these groups. Figure 3 shows this information in flow chart form. For example, contractual requirements originate in Projects, and are distributed to Licensing and Reliability, system functional requirement groups, system design groups and the uipment design and procurement groups. It can be seen that all aspects of the roject are considered at each stage in the overall program, with the respective lead functional group coordinating the efforts of the associated functional groups.

Figures 2 and 3 are intended to show graphically the overall quality assurance program. For the sake of clarity, variations among functional groups have not been shown. Specifics of the functions are contained in the detailed documentation of the program.

ASSURANCE OF DESIGN ADEQUACY

Specification of Technical Requirements

Engineering is responsible for designing or specifying equipment that conforms to the requirements of the application for which it is intended. This responsibility includes the specification of quality control requirements that will assure that the equipment will function as required in the system and plant.

Systems Engineering designs the plant to meet functional, safety and regulatory requirements. The component design engineers work closely with systems engineering to identify equipment limitations and to resolve functional requirements with equipment capabilities. The design of equipment also provides for access to components for in-service inspection and maintenance as required to assure continued integrity throughout the life of the plant.

Written parameters are forwarded to component design engineers by systems engineering detailing the design requirements for the specific plant. Equipment Specifications or drawings are prepared by the component design engineers to cover these requirements. The term "Equipment Specification" as used in this Quality Assurance Plan includes drawings when they are used instead of Equipment Specifications. Detailed quality control requirements are specified in the Equipment Specification, or its references. Examples of these are nondestructive tests, acceptance standards, functional tests, and recording the measured values of key characteristics. In the few cases when Equipment Specifications or design drawings are not used, the specific quality control requirements, tests and acceptance standards are identified in the purchase order.

Design Review for Compliance with Technical Requirements

Preliminary Equipment Specifications are reviewed within Westinghouse by systems engineers, materials and process engineers, licensing engineers, Quality Assurance, Projects, and others as required. These independent reviews assure that Equipment Specifications meet systems requirements, conform to established engineering standards, are adequate from a metallurgical and welding point of view, meet all code requirements, satisfy all safety requirements including those specified in safety analysis reports, contain necessary quality control requirements, and conform with the customer's contractual provisions. Written Engineering Instructions describe the requirements of the review.

Aspects of the equipment design that have an effect on that part of the plant design performed by the customer or architect-engineer are forwarded to them for their review. Customer or architect-engineer drawings which have an effect on the Westinghouse scope of supply are likewise sent to Westinghouse engineers for their review.

Technical requirements are provided in the bid package to qualified suppliers of components within the Westinghouse scope of responsibility. Suppliers' proposals responding to these bids are sent to engineering for review. The component design engineer evaluates the supplier's proposal for technical adequacy. He insists on sufficient functional design data to make an independent review of the supplier's design to assure that the equipment will meet all requirements. Consultants from the Westinghouse Research and Development Laboratory and outside experts are also used to review specific design features, as required. The component design engineer reviews how the supplier intends to meet the specified quality requirements. He reviews the proposed equipment for its capability to perform its function for the design life of the plant.

Westinghouse does not permit exceptions in the proposal specifications that adversely affect the safety or reliability of the equipment.

Purchase requisitions prepared by the component engineer are the basis for purchase orders issued by Purchasing to suppliers. The purchase order is the official contract document that covers the technical requirements in the form of the equipment specification.

Purchase requisitions are reviewed by Component Engineering, System Engineering, Projects and other functions, as necessary, to assure that technical requirements have been transmitted correctly to suppliers of the components.

Purchase orders require suppliers to submit detail drawings, and manufacturing, inspection and test procedures as the work under the purchase order progresses. This phase of the design is reviewed independently by Westinghouse component engineers. The written instructions for this phase are contained in an Administrative Specification and the Equipment Specification, which form part of the purchase order.

Formal Design Reviews

In addition to the routine reviews of technical requirements discussed above, formal design reviews are conducted by the Reliability section on critical systems, subsystems and components to improve their reliability and to reduce fabrication, installation and maintenance costs. The design reviews are comprehensive, systematic studies by personnel representing a variety of disciplines who are not directly associated with the development of the product. Specialists from other Westinghouse divisions and outside consultants are used in the reviews as necessary. Information developed by the reviews is recorded for evaluation and action by the cognizant design engineer.

Not all equipment receives this formal design review. The design review program is projected over a substantial period of time because of the comprehensive nature of each review. Selection of equipment to be reviewed is based on many considerations: relation to safety, effect on plant performance and availability, stage of design development, and others.

SUPPLIER QUALITY ASSURANCE

Preaward Evaluation of Prospective Suppliers

Prior to considering a new supplier for placement of a purchase order, a supplier evaluation is conducted. This is done in accordance with a written check list. The results are documented in a report issued to management personnel of Purchasing, Engineering, Quality Assurance, and Projects. The evaluation is conducted by a team consisting of Purchasing, Engineering and Quality Assurance. Other personnel such as material and process engineers and manufacturing engineers participate as required.

Considerations of the evaluation include:

- Previous experience with the supplier
- Physical plant facilities
- Quality control program and system
- Number and experience of design personnel
- Material control and raw material inspection
- In-process inspection
- Assembly and test capability
- Tool and gage control
- Special processes required
- Nondestructive testing
- Inspection and test equipment
- Records function

Deficiencies in the supplier's organization or systems are resolved with the supplier's management prior to placing a purchase order.

If an existing supplier does not maintain the quality level on Westinghouse orders, a similar team will review the supplier's problems and make recommendations to his management to correct the situation immediately. When problems arise, Westinghouse specialists aid the supplier in specific

areas such as welding, manufacturing and nondestructive testing to resolve the problem. In this manner, Westinghouse assures the continued high level of supplier performance necessary to obtain the quality level required by the contract.

Supplier Quality Control Requirements

Quality requirements that apply specifically to a component are contained in the Equipment Specification. Requirements of a quality systems nature, not peculiar to a component, are contained in two standard documents.

The first is entitled, "Administrative Specification for the Procurement of Nuclear Steam Supply System Components." This document is applied in all component purchase orders. The Administrative Specification requires the supplier not only to manufacture equipment that conforms to purchase order requirements, but to assure himself and Westinghouse by means of appropriate inspections and tests that the equipment conforms to these requirements. The quality control section of this specification contains specific requirements in areas such as:

- Calibration of measurement and test equipment
- Control of drawings, specifications, procedures and other documents used in design or manufacture, and revisions to these documents
- Control and identification of material
- Maintenance of quality control records
- Test control through written test procedures and test records
- Nonconforming supplies, including identification and control to preclude further use

The second document that specifies quality requirements is QCS-1, "Manufacturer's Quality Control Systems Requirements." This document is applied to orders for more critical equipment such as components related to safety. This document requires the supplier to maintain an adequate quality control system. This specification meets the intent of Appendix IX of Section III of the ASME Boiler and Pressure Vessel Code in the area of

quality control system requirements. QCS-1 requires the following, among other things:

- Establishment and maintenance of a system for the control of quality that assures that all supplies and services meet all specification, drawing, and contract requirements.
- Application of the system to subcontracted items.
- Written procedures that implement the system.
- Qualification of personnel.
- Qualification and control of processes including welding, heat treating, nondestructive testing, quality audits and inspection techniques.
- Operation under a controlled manufacturing system such as process sheets, travelers, etc.
- Written inspection plans for in-process and final inspection.
- Submittal of Inspection Check Lists for approval by Westinghouse; these check lists show inspection and test status.
- Recording of results of each inspection operation.
- Repair procedures, with provision for Westinghouse approval of all procedures utilizing operations not performed in the normal manufacturing sequence.
- Written work and inspection instructions for handling, storage, shipping, preservation and packaging.

As required, inspection hold points are specified by Westinghouse in the Equipment Specification or elsewhere in the purchase order. These are points of witness or inspection by Westinghouse beyond which work may not proceed without approval by Westinghouse.

Planning of Supplier Surveillance

Westinghouse PWR surveillance of suppliers during fabrication, inspection, testing and shipment of components is planned in advance and performed in accordance with written Quality Control Plans. These plans are prepared by Quality Assurance engineers and are based on the technical requirements of the purchase order. The plans are reviewed and approved by engineering.

The purpose of a Quality Control Plan is to provide planned guidance to the Quality Assurance field representative by (1) focusing attention on those

items which contribute most to quality and reliability, and (2) providing specific instructions for the witnessing, documentation, and acceptance of the equipment, and for auditing to assure the supplier's compliance with all quality control requirements. The plan identifies the points during manufacturing and test that Quality Assurance intends to witness.

The plan covers (1) the auditing of the supplier's quality control system and operation procedures; (2) surveillance of key operations such as welding, nondestructive testing, production and nonoperating electrical testing; and (3) inspection verification (for example, sampling review of radiographs, material test reports, key dimensions, and operating electric tests). Special emphasis is placed on the aspects of manufacture and inspection that most directly affect performance of the equipment. Lead units of a new design get particular attention in the supplier's shop by both Quality Assurance and Engineering representatives.

When surveillance is indicated, Quality Assurance develops a visit schedule depending on the supplier's performance. Visits are more frequent during the initial stages of manufacture, particularly to a new supplier, with frequency diminishing as the supplier demonstrates his capability.

Surveillance of Suppliers

The purpose of Westinghouse surveillance of suppliers is to provide Westinghouse management and customers first-hand objective assurance of compliance with specified requirements. The principle followed is that the supplier is responsible for inspecting and testing his product. The Westinghouse field representative assures that the supplier has done this, rather than attempting to perform the supplier's inspection for him or duplicate the work he has done. The frequency and scope of Westinghouse surveillance varies with criticality of equipment, supplier performance, complexity of the component, and other factors. This determination is made by Quality Assurance in conjunction with engineering. Quality Assurance Residents are established as necessary.

surveillance is accomplished in accordance with Quality Control Plans. In addition, the field representative confirms on a continuing basis that the supplier's system is adequate to ensure that a quality product will be built. He sees that written instructions and procedures are kept current, that application of drawings and specifications is controlled, that corrective action is implemented, and that other necessary controls are effective.

The Quality Assurance representative informs the supplier directly of problems he discovers and obtains commitments to correct them. He brings these problems to the attention of the supplier's management as required to obtain resolution.

Release of Equipment for Shipment

The Purchasing Administrative Specification requires the supplier to write a formal shipping release when he is satisfied that purchase order requirements have been met. When the Westinghouse Quality Assurance representative is satisfied that the equipment can be released for shipment, and after receipt of the supplier's release, he prepares a Quality Control release form, and distributes copies to the supplier, buyer and engineer. The equipment can then be released through normal engineering-purchasing channels for shipment.

CONSTRUCTION SITE QUALITY ASSURANCE

Control of Site Work

Work on nuclear steam supply equipment, as performed by the construction contractor and subcontractors, is monitored for conformance to written procedures and specifications which cover areas such as receiving inspection, storage, cleanliness, erection, in-process and final inspection and quality control, and testing. Special processes such as welding, cleaning and nondestructive testing are performed in accordance with written procedures by qualified personnel.

During component installation, Westinghouse Nuclear Power Service monitors work on nuclear steam supply and engineered safeguards equipment, and on critical structures. Qualified personnel provide technical advice on various disciplines of construction such as welding, mechanical and electrical system, instrumentation and control equipment, and start-up.

Each man is responsible for overseeing that the Westinghouse nuclear steam supply equipment assigned to him is in good condition when received and that it is stored, handled and installed properly according to applicable specifications, procedures, and manufacturers' instructions. Further, he verifies that the proper documents which record the critical actions and inspections associated with this work are prepared and filed.

The headquarters Quality Assurance group consists of a staff organizationally separate from Nuclear Power Service. This group provides independent assurance that quality-related activities are done in accordance with specifications and procedures. Nuclear Power Service provides technical advise to the constructor during critical operations. Personnel from headquarters audit site activities and monitor records for adequacy.

A procedure describes the system for identifying, reporting and obtaining disposition of nonconforming material, equipment or practices discovered at the site. Nuclear Power Service personnel fill out a Field Deficiency Report to provide the cognizant engineering group with the information necessary for making proper and timely disposition of each problem. After the cognizant personnel make a disposition, it is noted on the Field Deficiency Report and returned to the field for action. Files of these reports are maintained to record all field deficiencies and to provide for long-term corrective action. Site personnel must discontinue work on the nonconforming equipment until disposition is made.

Qualification of Westinghouse Personnel

Nuclear Power Service welding engineers are qualified to Level II as required by the ASME Boiler and Pressure Vessel Code, Section III, Appendix IX.

Nuclear Power Service personnel who advise and consult during the pre-operational and functional testing are graduates of the Westinghouse Nuclear Operator training program.

QUALITY CONTROL RECORDS

The Administrative Specification described above requires suppliers to maintain records for each test (nondestructive, electrical, performance) specified in the purchase order. The record must show the test procedure, equipment and materials used, the acceptance standards applied, and the test results obtained. The part or assembly tested, date of test, and test operator identity is shown.
The administrative specification and equipment specification also require maintenance of other records as required, such as material test reports, welder qualifications, inspection records, etc. Records such as trip reports, deviation notices, and other quality-related documents form a part of the Quality Assurance records maintained by Westinghouse.

Suppliers are required to maintain these records for specified periods, after which they notify Westinghouse so a record file for the life of the plant can be arranged. Suppliers are also required to transmit records to Westinghouse as work is completed for added assurance of record availability.

Records generated at the construction site are filed and maintained there.

NONCONFORMING MATERIAL, TREND ANALYSIS AND CORRECTIVE ACTION

Deficiencies at Suppliers' Plants

The Administrative Specification and QCS-1, described above, contain specific contractual requirements for controlling nonconforming material or workmanship.

The supplier must physically identify all material that does not conform to purchase order requirements and take necessary actions to preclude its further use. All deviations are documented in writing and reviewed by engineering, quality control and other appropriate groups. First, consideration is given to restoring the material to its specified condition or scrapping it. If that is impractical, the deviation is considered from both an engineering and a quality control point of view. If acceptable, the deviation is formally approved in writing by the cognizant engineer. A permanent file of these records is maintained.

QCS-1 requires that the supplier's quality system provides for the Wi-cation and evaluation of significant or recurring discrepancies and for alerting the supplier's cognizant management to the need for corrective action. The supplier must review corrective action for effectiveness and the need for further action.

Deficiencies at the Construction Site

A written procedure provides for documented reporting of deficiencies found during plant construction. These reports are submitted by site engineering personnel to the cognizant engineering department. Like reports from suppliers' plants, these reports are reviewed for necessary action, formally approved by the cognizant engineer and permanently filed.

Trend Analysis and Corrective Action

Plant Quality Assurance analyzes all deficiency data on Westinghouse-supplied equipment received from suppliers and from construction sites to determine patterns of occurrence by supplier, by component, or by process. With this as a guide, Quality Assurance and cognizant engineers determine corrective actions that are needed to prevent recurrence. This action is in addition to assuring that the supplier or site personnel take corrective action of the individual deficiencies reported.

AUDITS

Suppliers' Plants

The Westinghouse audit function of suppliers is described in the section, "Supplier Quality Assurance", above.

Construction Site

Plant Quality Assurance is responsible for conducting independent audits of Nuclear Steam Supply System work at the construction site to assure that proper procedures and instructions are available and in use, and that adequate controls exist and are effective. Reports of audits are sent to top management of the
PWR Systems Division.

Westinghouse Divisions

The Westinghouse Corporation has a formal audit procedure which applies to the PWR System Division and all other divisions furnishing equipment or

services to the nuclear industry as well as other areas. The audit program is under the direction of the corporate Director of Reliability Control who is organizationally independent from the operating divisions.

The purpose of the headquarters reliability control function is to provide an independent verification that the quality assurance programs of the Westinghouse divisions are effectively assuring that the product quality complies with the requirements of their customers and that the programs are using the most
effective approaches to prevent the manufacture of defective products. In addition, this group assists divisions in continually improving their quality control programs and provides help that may be required to institute the recommended improvements identified in the audits.

Audits are performed of each division's quality assurance effort. An audit is usually performed by a two or three man team, consisting of a member of the headquarters reliability control staff and the quality control manager of another division in the same product group as the division to be audited.

The audit normally takes five days. The quality assurance systems and procedures that have been established by the division are reviewed to determine if these systems and procedures are sufficient to provide an effective program. Observations are then made to assure that the established systems and procedures are being correctly followed.

An oral presentation of the findings and conclusions of the audit is made to the Division General Manager, Quality Assurance Manager, and other personnel affected by the audit findings. The items recommended for improvement in the quality assurance program are presented as well as recommendations of approaches for accomplishing these improvements.

Following the audit, a written report containing the findings and recommendations reviewed in the oral report is prepared and sent to the attendees of

the meeting. In addition, a copy of the report is sent to the Vice President to whom the division reports and to the Corporate Director of Manufacturing. This procedure assures that the attention of a high level of management is directed to actions needed to carry out the recommendations of the audit.

The Division Manager is responsible for reviewing the audit report and for taking action to improve the Quality Assurance Program in those areas identified in the report as requiring improvement. In addition, the Vice President sends a letter to each of his division managers after completion of the audits for his group asking for the status of implementation of corrective action for each item identified in the audit report. The answer must be sent to the Vice President as well as the Corporate Reliability Control Staff. This reply provides a basis for further follow by the Corporate Reliability Control Staff to assure that the audit findings are acted upon.

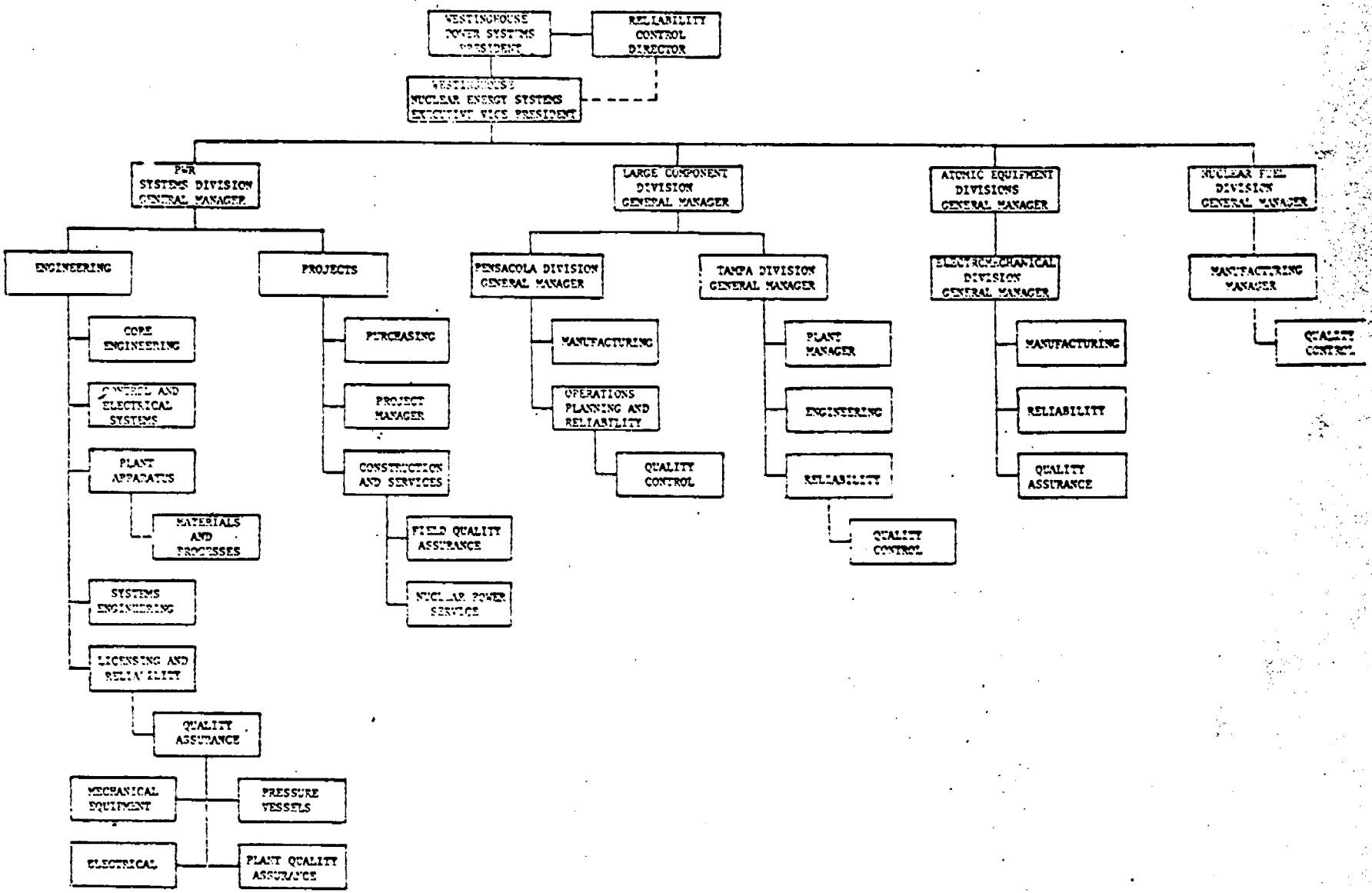

QUALITY ASSURANCE FUNCTIONAL ORGANIZATION FOR WESTINGHOUSE NUCLEAR ENERGY SYSTEMS

FIGURE 1A-1

FIGURE 1A-2

NUCLEAR ENERGY SYSTEMS
FUNCTIONAL GROUPS QUALITY ASSURANCE FLOW CHART

Flow Path No.	Flow Path Definition	Originating Functional Group	PROJECT A	LICENSING AND RELIABILITY B	SYSTEM FUNCTIONAL REQUIREMENT GROUPS C	SYSTEM DESIGN GROUPS D	ENGINEERING DESIGN AND PROCUREMENT GROUPS E	QUALITY ASSURANCE GROUPS F	MATERIALS ENGINEERING GROUPS G	ARCHITECT ENGINEER H	EQUIPMENT SUPPLIERS I	CONSTRUCTORS J	ON-SITE SERVICE AND INSPECTION GROUPS K	APPLICANT L
0	Design and Construction Follow and Approval (to and from all groups)	A	A*	B*	C*	D*	E*	F*	G*	H*	I*	J*	K*	L*
1	Contractual Requirements	A		B	C	D	E							
2	Safety Requirements	B				D	E							
3	Functional Requirements	C				D								
4	System Design	D		B	C									
5	Concurrence on Design	B				D		F						
5(a)	Concurrence on System Design	C				D								
5(b)	Design Review (Selected Critical Areas)	F			C	D	E		G				K	
7	Equipment Functional Requirements	D					E							
8	System Functional Requirements	D								H			K	
9	Quality Control Plan	F					E							
10	Equipment Specification (including Quality Control Requirements)	E		B		D		F	G					
11	Concurrence on Equipment Specifications	BDFG					E							
12	Final Equipment Specifications	E				D		F			I		K	
13	(a) Design, (b) Manufacturing and Inspection Procedure	(a)I (b)E					E	F	G					
14	Concurrence of (a) Design, (b) Manufacturing and Inspection Procedures	(a)FG (b)F					E				I			
15(a)	Surveillance, Process Audits and Quality Control Plan Actions	F									I			
15(b)	Corrective Action, Follow through on Deficiencies	F											K	

*For clarity, not shown in Fig. 3

FIGURE 1A-2

Flow Path No.	Flow Path Definition	Origination Functional Group	PROJECT A	LICENSING AND RELIABILITY B	SYSTEM FUNCTIONAL REQUIREMENT GROUPS C	SYSTEM DESIGN GROUPS D	EQUIPMENT DESIGN AND PROCUREMENT GROUPS E	QUALITY ASSURANCE GROUPS F	MATERIALS ENGINEERING GROUPS G	ARCHITECT ENGINEER H	EQUIPMENT SUPPLIERS I	CONSTRUCTORS J	ON-SITE SERVICE AND INSPECTION GROUPS K	APPLICANT L
16	Materials Evaluation	(a) I (b) I					E		G					
17	Materials Concurrence	(a) G (b) E					E				I			
18	System Layout	E		B		D	E							
19	Concurrence on System Layout	BDE								H				
20	Final System Layout and Field Follow	H										J		
21	Inspection and Erection, Requirements and Procedures	J					E	F	G				K	
22	Concurrence on Inspection and Erection, Requirements and Procedures	EFHG										J		
23	Equipment for Receipt Inspection	I											K	
24	Final Equipment Inspection and Erection, Requirements and Procedures	K										J		
25	Erection Follow	K										J		
26	System Installed	J											K	
27	Testing Requirements and Procedures	D		B	C		E							
28	Concurrence of Testing Requirements and Procedures	BCE				D								
29	Final Testing Requirements and Procedures	D											K	
30	System Performance Test Results	K		B	C	D								
31	Concurrence on System Performance	BCD											K	
32	Handing over of Completed Plant	K												L
33	Operating and Emergency Instructions	D		B	C		E							L

FIGURE 1A-2

Flow Path No.	Flow Path Definition	Originating Functional Group	A PRODUCT	B LICENSING AND RELIABILITY	C SYSTEM FUNCTIONAL REQUIREMENT GROUPS	D SYSTEM DESIGN GROUPS	E [illegible] AND PROCUREMENT GROUPS	F QUALITY ASSURANCE GROUPS	G MATERIALS ENGINEERING GROUPS	H ARCHITECT ENGINEER	I EQUIPMENT SUPPLIERS	J CONSTRUCTORS	K ON-SITE SERVICE AND INSPECTION GROUPS	L AT LARGE
34	Concurrence on Operating and Emergency Instructions*	BCEL				D								
35	Final Operating and Emergency Instructions	D											K	L
36	Technical Specifications	B			C	D	E		G				K	L
37	Concurrence on Technical Specifications	CDEGKL		B										
38	Final Technical Specifications	B								H				L
39	Plant Operation Information	L											K	
40	Plant Operation Information (to all Appropriate Westinghouse Groups)	K	A*	B*		D*	E*		G*				K*	
41	Audit of Site Quality Assurance	F											K	
42	Analysis of Plant Operating and Maintenance Information	F		B		D	E		G		I			

*For clarity, not shown in Fig. 3

FIGURE 1A-3

NUCLEAR ENERGY SYSTEMS FUNCTIONAL GROUPS
QUALITY ASSURANCE SCHEMATIC FLOW DIAGRAM

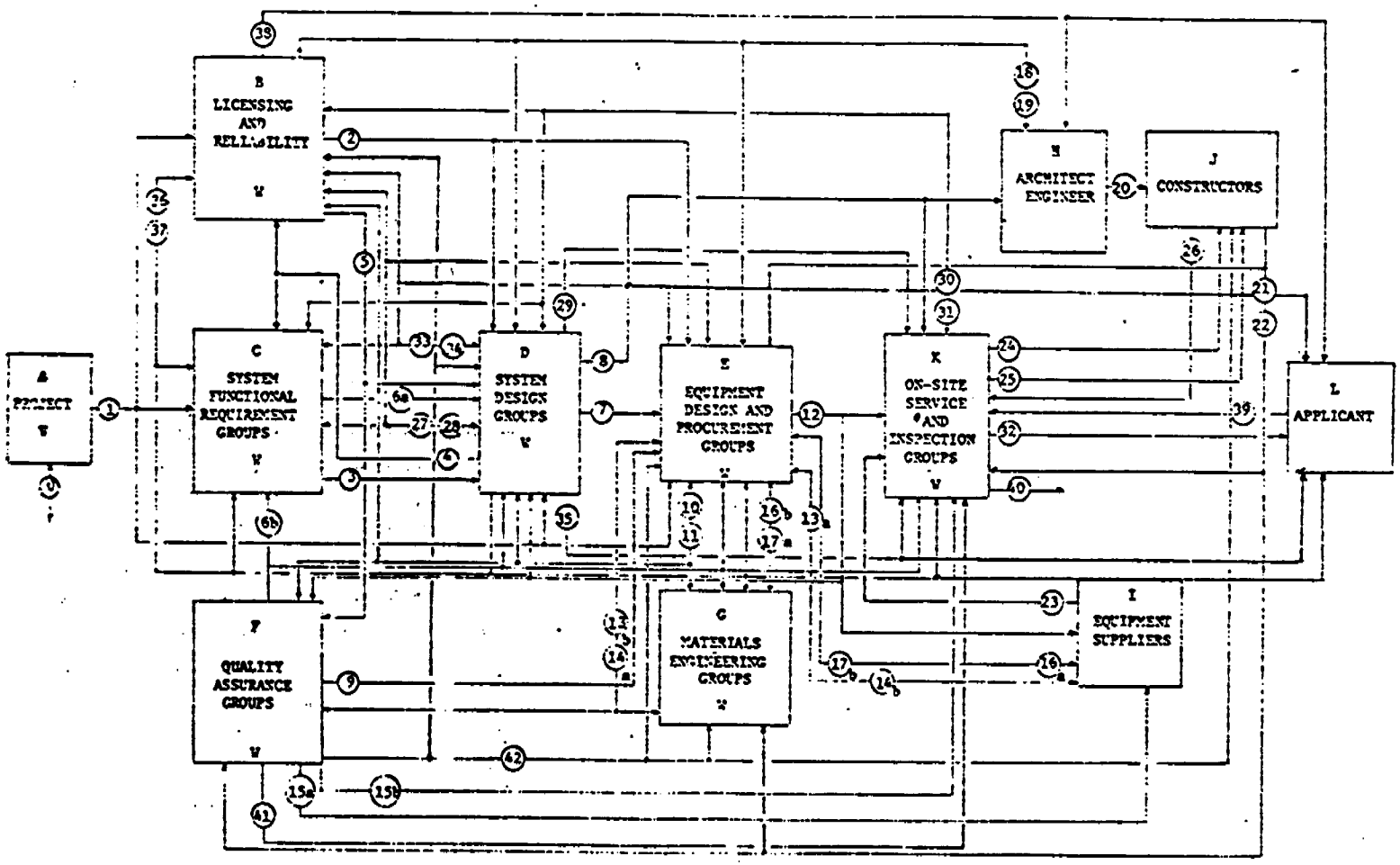

APPENDIX

1B

Quality Assurance Package for Concrete

QUALITY ASSURANCE PACKAGE FOR CONCRETE

CONCRETE

List of procedures (specifications, manuals, and forms) used for QC/QA Control.

Specs & Manuals	Description
C-19	Forming, Placing, Curing and Finishing Concrete
C-20	Specifications for Concrete
FC-2	Specification for performing Quality Control materials testing and allied services
SP-2	ACI Manual of Concrete Inspection

QC Forms

1. Concrete placement check card (attached).
2. Concrete placement Inspection Report (attached).
3. Concrete Placement and Test Report (attached).
4. PTL concrete placement card (attached).
5. PTL report on physical tests of concrete coarse aggregates (attached).
6. PTL report on physical tests of concrete fine aggregates (attached).
7. PTL concrete temperature report (in field preplacement check - attached).
8. PTL daily concrete batch plant report (attached).
9. PTL report of test of 6" x 12" concrete cylinders (attached).

Special Instructions

1. Civil responsibilities for Unit 4 Containment Mat placement.
2. Concrete Batch Plant Technician's duties for Unit 4 Containment Mat placement.
3. Quality Assurance guidelines for concrete placement inspectors for Unit 4 Containment Mat placement.
4. Turkey Point ready-mix driver instruction sheet for Unit #4 Containment Mat.
5. PTL supervision instructions to PTL technicians on records required for Unit 4 Containment Mat placement.
6. PTL Field Technican guidelines for Turbine Pedestal Unit #4 placement from QAE.

BECHTEL CORPORATION

Job No. 5610

CONCRETE PLACEMENT CHECK

DATE: _____

LOCATION: _____

QUANTITY: _____

MIX: _____ SLUMP: _____

DWG. No.: _____

	CHECK OFF		COMMENTS
	SUPERINTENDENT	ENGINEER	
CIVIL			
ELECTRICAL			
MECHANICAL			
SURVEY			
QUALITY CONTROL			
			INSPECTOR:

Brevard Printing Company

CONCRETE PLACEMENT INSPECTION REPORT

DATE _____ LOCATION _____

_____

SHIFT _____ WEATHER _____

SUBCONTRACTOR: _____ PLACING SUPT: _____

SEGMENT: _____ TO _____ ELEV: _____ TO _____

SPECIFICATION MIX REQUIREMENTS: MIX _____ SLUMP _____

ICE _____ # TEMP _____ MAX AIR _____ % _____ % ADMIX _____

MAX PLACEMENT RATE _____ FT/HR. LIFT THICKNESS _____

FORMS: _____ ACCEPTABLE - CORRECTIONS _____

_____

REBAR: _____ ACCEPTABLE - CORRECTIONS _____

_____

TENDON SHEATHING: _____ ACCEPTABLE - CORRECTIONS _____

_____

PRIOR JOINT SURFACE: _____ ACCEPTABLE - CORRECTIONS _____

SPECIAL INSTRUCTIONS: _____

PLACEMENT STARTED @ _____ ON _____ QUANTITY: _____

PLACEMENT FINISHED @ _____ ON _____ TEST'G LAB FL'D TECH _____

NUMBER OF VIBRATORS USED: _____ SPARE VIBRATORS AVAILABLE _____

ACTUAL PLACEMENT RATE: _____ IN _____ HR.

CURING REQUIRED: _____ FOR _____ DAYS _____

CHECKED @ _____ ON _____

REMARKS: _____

_____

cc: QUALITY ASSURANCE ENGINEER/ORIG'L

INSPECTOR _____

RECHTEL CORPORATION

TURKEY POINT PROJECT

CONCRETE PLACEMENT AND TEST REPORT

Lab Insp. _____

Sheet ___ of ___

Concrete Tested Week Of _____

Date Concrete Placed	Cyl. No.	Mix No.	Concrete Cu. Yds. Placed	Location	Slump Inches	% Air	Unit Wt. PCF	Conc. Temp. F.	Compressive Strength PSI				Remarks
									7	28	90	7/28	

Cement Brand _____ Type _____ Source _____

(4)

FRONT

LAB NO. _____ NAME & ADDRESS OF CLIENT MA. NO. _____

SAMPLE : _____ Concrete Cylinders Cast On _____ By P T L Client's Repr.

@ _____ AM PM @ Job Plant (Cross Out One)

PROJECT : _____

LOCATION OF POUR : _____

CLASS OF CONCRETE : _____ WATER ADDED : _____ Gals.

SLUMP OF CONCRETE : _____ QUANTITY : _____

CONTRACTOR : _____ TRUCK NO. : _____

TICKET NO. : _____

MIXING TIME : _____

ADMIXTURE : _____ BLDG. PERMIT NO.: _____

CYLS. CAST BY : _____

SUPPLIER : _____ TRUCK TYPE : _____

REMARKS:

BACK

NAME & ADDRESS OF CLIENT

LAB. NO. _____ COMPRESSION TEST MA. NO. _____

Mark	Sect. Area Sq. Inch	Crushing Load Lbs.	Crushing Strength Lbs. per Sq. Inch	Aver.	Age Days	Due Date
	28.27					
	28.27					
	28.27					
	28.27					
	28.27					
	28.27					
	28.27					
	28.27					

COARSE

FORM 407-MA

PITTSBURGH TESTING LABORATORY

3901 N.W. 29th AVENUE, MIAMI, FLORIDA 33142

AS A MUTUAL PROTECTION TO CLIENTS, THE PUBLIC AND OURSELVES, ALL REPORTS ARE SUBMITTED AS THE CONFIDENTIAL PROPERTY OF CLIENTS, AND AUTHORIZATION FOR PUBLICATION OF STATEMENTS, CONCLUSIONS OR EXTRACTS FROM OR REGARDING OUR REPORTS IS RESERVED PENDING OUR WRITTEN APPROVAL.

ORDER No. WA-2955

LABORATORY No.

CLIENT'S No.

REPORT
ON
PHYSICAL TESTS OF CONCRETE AGGREGATE

CLIENT: BECHTEL CORPORATION
P. O. Box 3218
Florida City, Florida 33030

PROJECT: Florida Power & Light Company
Turkey Point, Units 3 and 4

SAMPLE: samples of coarse aggregate sampled by Pittsburgh Testing Laboratory representative at

o o o o o o

TEST RESULTS

SAMPLE	SIEVE SIZE	PERCENT PASSING	ASTM C 33-66 SPECIFICATIONS FOR NO. 57 ROCK
	1"		95 - 100
	3/4"		
	1/2"		25 - 60
	3/8"		
	No. 4		0 - 10
	No. 8		0 - 5
Fineness Modulus:			
	1"		95 - 100
	3/4"		
	1/2"		25 - 60
	3/8"		
	No. 4		0 - 10
	No. 8		0 - 5
Fineness Modulus:			
	1"		95 - 100
	3/4"		
	1/2"		25 - 60
	3/8"		
	No. 4		0 - 10
	No. 8		0 - 5
Fineness Modulus:			

PITTSBURGH TESTING LABORATORY

John W. Harllee

John W. Harllee
Vice President

cc: 1 FP&L, Attn: Mr. Werry
1 FP&L, Attn: Mr. Williams
3 Client, Attn: Mr. Wescott
1 Client, Attn: Mr. Woods
3 Client, Attn: Mr. Stade at Md.
2 PG

FORM 407-MA

PITTSBURGH TESTING LABORATORY

3901 N.W. 29th AVENUE, MIAMI, FLORIDA 33142

AS A MUTUAL PROTECTION TO CLIENTS, THE PUBLIC AND OURSELVES, ALL REPORTS ARE SUBMITTED AS THE CONFIDENTIAL PROPERTY OF CLIENTS, AND AUTHORIZATION FOR PUBLICATION OF STATEMENTS, CONCLUSIONS OR EXTRACTS FROM OR REGARDING OUR REPORTS IS RESERVED PENDING OUR WRITTEN APPROVAL.

ORDER No. MA-2955 LABORATORY No.

CLIENT'S No.

REPORT OF PHYSICAL TESTS OF CONCRETE AGGREGATES

CLIENT: BECHTEL CORPORATION
P. O. Box 3218
Florida City, Florida

PROJECT: Turkey Point - Units 2 and 3
Florida Power and Light Company

SAMPLE: of fine aggregate sampled by the Pittsburgh Testing Laboratory representative at

TEST RESULTS

SAMPLE	SIEVE SIZE	PERCENT PASSING	ASTM C33-66 SPECIFICATION FOR FINE AGGREGATE
	3/8"		100
	No. 4		95-100
	No. 8		80-100
	No. 10		50- 85
	No. 30		25- 60
	No. 50		10- 30
	No. 100		2- 10
Fineness Modulus:			
	3/8"		100
	No. 4		95-100
	No. 8		80-100
	No. 16		50- 85
	No. 30		25- 60
	No. 50		10- 30
	No. 100		2- 10
Fineness Modulus:			
	3/8"		100
	No. 4		95-100
	No. 8		80-100
	No. 16		50- 85
	No. 30		25- 60
	No. 50		10- 30
	No. 100		2- 10
Fineness Modulus:			

PITTSBURGH TESTING LABORATORY

John W. Harllee

John W. Harllee, Vice Pres.

cc: 1 FP&L, Attn: Mr. Werry
1 FP&L, Attn: Mr. Williams
3 Client, Attn: Mr. Wescott
1 Client, Attn: Mr. Battin
3 Client, @ Md. Attn: Mr. Stade

2 PG

1B-7

FORM 88-MA

PITTSBURGH TESTING LABORATORY

ESTABLISHED 1881

MIAMI, FLORIDA 33142

AS A MUTUAL PROTECTION TO CLIENTS, THE PUBLIC AND OURSELVES, ALL REPORTS ARE SUBMITTED AS THE CONFIDENTIAL PROPERTY OF CLIENTS, AND AUTHORIZATION FOR PUBLICATION OF STATEMENTS, CONCLUSIONS OR EXTRACTS FROM OR REGARDING OUR REPORTS IS RESERVED PENDING OUR WRITTEN APPROVAL.

MA-2955

DATE _____

CONCRETE TEMPERATURE REPORT

PLANT _____

CLIENT: Bechtel Corporation
P. O. Box "A"
Florida City, Florida

BATCHERMAN _____

SHIFT _____

PROJECT: Turkey Point, Units 3 & 4, Job No. 5610

MIX.CLASS _____

SPEC.SLUMP _____

PLACEMENT LOCATION/ELEVATION _____

MAX.TEMP. _____

BATCH No.						
TIME						
AIR TEMP. CEMENT TEMP. C. AGG. TEMP. F. AGG. TEMP. WATER TEMP. ICE TEMP.						
# ICE/C.Y.						
# CHILLED WATER/C.Y.						
MIXING TIME/BATCH						
TRUCK NO.						
CONC.TEMP @ PLANT						
CONC. TEMP. @ DISCHARGE						
SLUMP						
(KELLY BALL)						
AIR CONTENT						
UNIT WEIGHT						
APPEARANCE OF MIX						
REMARKS						

Respectfully submitted,
PITTSBURGH TESTING LABORATORY

_____
Batch Plant Technician

Page ___ of ___

John W. Harllee
Vice President

FORM 95-MA

PITTSBURGH TESTING LABORATORY

ESTABLISHED 1881

MIAMI, FLORIDA 33142

AS A MUTUAL PROTECTION TO CLIENTS, THE PUBLIC AND OURSELVES, ALL REPORTS ARE SUBMITTED AS THE CONFIDENTIAL PROPERTY OF CLIENTS, AND AUTHORIZATION FOR PUBLICATION OF STATEMENTS, CONCLUSIONS OR EXTRACTS FROM OR REGARDING OUR REPORTS IS RESERVED PENDING OUR WRITTEN APPROVAL.

MA-2955

DATE _____

DAILY CONCRETE BATCH PLANT REPORT

PLANT _____

CLIENT: Bechtel Corporation
P. O. Box "A"
Florida City, Florida

BATCHERMAN _____

SHIFT _____

PROJECT: Turkey Point, Units 3 & 4, Job No. 5610

MIX CLASS _____

PLACEMENT LOCATION/ELEVATION _____

SPEC. SLUMP _____

TIME	TRUCK NO.	TICKET NO.	CU.YD.	RECORDATION	DATCH NO.	MOISTURE METER	SLUMP METER	REMARKS
				CEMENT				
				C. AGG. @				
				F. AGG. @				
				WATER				
				RET'WL				
				AEA				
				ICE				
				CEMENT				
				C. AGG. @				
				F. AGG. @				
				WATER				
				RET'WL				
				AEA				
				ICE				
				CEMENT				
				C. AGG. @				
				F. AGG. @				
				WATER				
				RET'WL				
				AEA				
				ICE				
				CEMENT				
				C. AGG. @				
				F. AGG. @				
				WATER				
				RET'WL				
				AEA				
				ICE				

DESIGN MIX:
CEMENT _____
C. AGG. _____
F. AGG. _____
WATER _____
RET'WL _____
AEA _____
ICE _____

AGG. SAMPLED _____
F.M. _____
FREE MOISTURE CA _____ @ _____
@ _____
FA _____ @ _____
@ _____
CEMENT SAMPLED @ _____
FROM _____

WEATHER _____

Respectfully submitted,
PITTSBURGH TESTING LABORATORY

Batch Plant Technician

John W. Harllee
Vice President

Page ____ of ____

PITTSBURGH TESTING LABORATORY

FORM 1221-MA

3901 N.W. 29th AVENUE MIAMI, FLORIDA 33142

AS A MUTUAL PROTECTION TO CLIENTS, THE PUBLIC AND OURSELVES, ALL REPORTS ARE SUBMITTED AS THE CONFIDENTIAL PROPERTY OF CLIENTS, AND AUTHORIZATION FOR PUBLICATION OF STATEMENTS, CONCLUSIONS OR EXTRACTS FROM OR REGARDING OUR REPORTS IS RESERVED PENDING OUR WRITTEN APPROVAL.

LABORATORY NO. J-750
JOB NO. NA-2955
CUSTOMER'S ORDER
DATE April 4, 1969 - 7

REPORT OF TEST OF 6" x 12" CONCRETE CYLINDERS

FOR Bechtel Corporation
P. O. Box 3218
Florida City, Fla.

COMPRESSION TEST

MARK	SECTIONAL AREA SQ. INCH	CRUSHING LOAD LBS.	CRUSHING STRENGTH LBS. PER SQ. INCH	AVER.	AGE DAYS
781	28.27	144,000	5090		7
781	28.27	139,000	4920		7
781	28.27	141,500	5010	5010	7
781	28.27				28
781	28.27				28
781	28.27				28

SAMPLE : 6 concrete cylinders cast on 3-28-69 by PTL representative at 1:05 PM at jo and received in laboratory on 3-29-69

PROJECT : Turkey Point Units 3 & 4

LOCATION OF POUR : Unit #4 containment structure wall panel #49 - 74° to 134° El. 89' to 99' Dwg. C-155-156

CLASS OF CONCRETE : 2P5

SLUMP OF CONCRETE : 2"

CONTRACTOR : Bechtel Corporation

ADMIXTURE : 3 oz./bag Retardwal, 1½ oz. C.Y. Aircon

SUPPLIER : Heule Turkey Point Batcher

Water added : 5 gals.
QUANTITY : 9
TRUCK NO. : 695
TICKET NO. : 407582
MIXING TIME : 10 min.
BLDG. PERMIT NO. :
Cyls. cast by : Bonn
Air : 3.4%
Unit Weight : 142.0
Conc. Temp. : 65

74

yr
cc: 5 Client Attn: Mr. Hamilton @ Box 637, Perrine
1 Client Attn: Mr. Woods
3 Client Attn: Mr. Stone @ Maryland
1 Fla. Power Light Attn: Mr. Werry
1 Fla. Power Light Attn: Mr. Williams, Jr.
1 PTL-Turkey Point
2 PG

PITTSBURGH TESTING LABORATORY

John W Hellee
DISTRICT MANAGER

APR 10 1969 BECHTEL CORP.