STONE & WEBSTER ENGINEERING CORPORATION

CALCULATION TITLE PAGE

CLIENT & PROJECT	PAGE 1 OF 23
Private Fuel Storage Limited Liability Corporation / Private Fuel Storage Facility	+12 pages of attachments
CALCULATION TITLE **Dose Rate Calculations at PFSF Locations Potentially Accessible to Wildlife and Estimates of Annual Doses to Individual Animals**	QA CATEGORY III

CALCULATION IDENTIFICATION NUMBER

J.O. OR W.O. NO.	DIVISION & GROUP	CURRENT CALC. NO.	OPTIONAL TASK CODE	OPTIONAL WORK PACKAGE NO.
05996.02	**Rad. Protection**	**UR(D)-008**	**NA**	**NA**

APPROVALS - SIGNATURE & DATE

PREPARER(S)/DATE(S)	REVIEWER(S)/DATE(S)	INDEPENDENT REVIEWER(S)/DATE(S)	REV. NO. OR NEW CALC. NO	SUPERSEDES CALC. NO. OR REV. NO.	CONFIRMATION REQUIRED (X) YES	CONFIRMATION REQUIRED (X) NO
J. R. Johns JR Johns 10-5-99	E. S. Kirstein ES Kirstein 10-5-99	NA	0	N.A.		X
J. R. Johns JR Johns 3-14-01	E. S. Kirstein ES Kirstein 3/14/01	NA	1	0		X

DISTRIBUTION

GROUP	NAME & LOCATION	COPY SENT (X)	GROUP	NAME & LOCATION	COPY SENT (X)
RECORDS MGT. FILES (OR FIRE FILE IF NONE)	JOB BOOK ✓ FIRE FILE ✓ E. Kirstein J. Johns	ORIG. x			

TABLE OF CONTENTS

SECTION	DESCRIPTION	PAGE
	RECORD OF REVISIONS	4
1.0	OBJECTIVE	5
2.0	METHODOLOGY	5
3.0	INPUT DATA	6
4.0	ASSUMPTIONS	6
5.0	CALCULATION / RESULTS	10
6.0	CONCLUSION	22
7.0	REFERENCES	23

ATTACHMENTS

Attachment A	Printout of Photons and Radiological Totals Reports from the OCRWM LWR Radiological Database for Spent Fuel With Specified Burnup, Cooling Times and Enrichments	A1-A12

LIST OF TABLES

Table 5-1	Determination of Gamma Scaling Factor from 45 GWd/MTU Burnup and 5-Year Cooled HI-STORM PWR Design Basis Fuel to 35 GWd/MTU Burnup and 20-Year Cooled Representative Average PFSF PWR Fuel	12
Table 5-2	Determination of Gamma Scaling Factor from 45 GWd/MTU Burnup and 5-Year Cooled HI-STORM PWR Design Basis Fuel to 40 GWd/MTU Burnup and 10-Year Cooled Relatively Hot PFSF PWR Fuel	13

Table 5-3	Determination of Gamma Scaling Factor from 40 GWd/MTU Burnup and 5-Year Cooled TranStor PWR Design Basis Fuel to 40 GWd/MTU Burnup and 10-Year Cooled Relatively Hot PFSF PWR Fuel	14
Table 5-4	Determination of Gamma Scaling Factor from 40 GWd/MTU Burnup and 5-Year Cooled TranStor PWR Design Basis Fuel to 35 GWd/MTU Burnup and 20-Year Cooled Representative Average PFSF BWR Fuel	14
Table 5-5	Determination of Gamma Scaling Factor from 40 GWd/MTU Burnup and 6-Year Cooled TranStor BWR Design Basis Fuel to 35 GWd/MTU Burnup and 10-Year Relatively Hot PFSF BWR Fuel	15
Table 5-6	Summary of Scaling Factors for Scaling Dose Rates Associated With Design Basis Fuels to Those Representative of Average and Relatively Hot PFSF Fuel	16
Table 6-1	Summary of Dose Rates and Annual Doses at Locations of Interest In Contact with Storage Casks at the PFSF	22

RECORD OF REVISIONS

Revision 1

Table of Contents, pages 2 & 3 – Revised the Table of Contents to account for changes to page numbers.

Record of Revisions, Page 4 – Added the section entitled "Record of Revisions".

Objective, Page 5 – Deleted the objective of calculating dose rates and doses to animals assumed to be outside of the nuisance fence. This calculation was not used in the PFSF licensing documents, and is considered unnecessary.

Methodology, Page 5 – Explained that assessment of dose rates to wildlife from the TranStor storage cask are being retained in this calculation for historical reasons, even though the cask vendor has withdrawn its application for licensing the TranStor storage system. Deleted the discussion of the methodology used to calculate dose rates and doses to animals outside of the nuisance fence.

Input Data, Page 6 – Changed the TranStor vendor name from SNC (Sierra Nuclear Corp.) to BNFL, to reflect the current owner of the vendor company. Moved a statement that "placement of storage casks on the pads at the PFSF is in accordance with the arrangement shown in Figure 1.2-1 of the PFSF SAR" from the Input Data section to the Assumptions section. While this was previously an input, the cask spacing has recently changed to separate the casks a greater distance in the north-south direction. Use of the previous spacing for dose rate calculations is a conservative assumption. Removed the input discussing vendor calculated dose rates at the security fence and beyond, since the calculation of doses to animals outside the nuisance fence was removed.

Assumptions, Pages 6-9 – Clarified that the design basis fuels are too "hot" for the shipping casks that will be used to transport spent fuel to the PFSF, instead of the vendors' shipping casks since TranStor shipping casks will no longer be used. Updated the revision number of a Holtec drawing that shows HI-STORM storage cask inlet ducts. Indicated that horizontal distances were conservatively used to calculate dose rates from nearby casks, rather than the longer slant path distances from the middle of a cask to the inlet ducts or top of a cask where an animal is considered to be located. Explained that dose rates from nearby casks are taken from the Reference 6 calculation, which conservatively assumes the 15 ft center-to-center cask spacing. Removed the time that animals are assumed to be near the nuisance fence since this dose assessment was removed from the calculation.

Calculation, Page 10 – Revised a quotation from PFSF SAR Section 7.4 to reflect the latest SAR revision. Page 18 - Removed the Section entitled "Dose Estimate to Animals Outside Perimeter Fences", for the reason discussed above.

Conclusion, Page 22 - Deleted the paragraph identifying calculated dose rate and dose to an animal assumed to be outside of the nuisance fence.

References, Page 23 - Updated References.

1.0 OBJECTIVE

The purpose of this calculation is to:

- Calculate dose rates in contact with storage casks at the Private Fuel Storage Facility (PFSF), where it is considered possible for certain wildlife to access. Assume animals are located in contact with the inlet ducts at the bottom of a storage cask, and on contact with the top of a storage cask. In addition to dose rates from the cask that the animal is assumed to be in contact with, the dose rate contribution from nearby casks in the PFSF storage cask array is included.
- Based on the calculated dose rates, estimate annual doses to animals assumed to spend a considerable fraction of their time on contact with a storage cask, including the dose contribution from nearby casks in the array.

2.0 METHODOLOGY

Dose rate information is obtained from the Holtec International (Holtec) HI-STORM Storage Cask FSAR (Reference 1) and the BNFL Fuel Solutions, Corp. (BNFL, also known as Sierra Nuclear Corporation, SNC) TranStor Storage Cask SAR (Reference 2) for each of the locations of interest on contact with a storage cask. Although BNFL withdrew their application for licensing of the TranStor storage system after this calculation was initially issued, calculations of doses to wildlife associated with TranStor storage casks are being retained in this calculation for historical purposes. The dose rate information from the storage cask vendor SARs is based on the assumption that the storage casks contain their vendor's design basis fuel. Neither HI-STORM nor TranStor design basis fuel used in the vendors' storage cask shielding analyses will be stored at the PFSF, since these design basis fuels are too "hot" for the shipping casks that will be used to transport spent fuel to the PFSF, as discussed in Section 7.3.3.5 of the PFSF SAR (Reference 3). Therefore, scaling factors are calculated that can be applied to storage cask dose rates with design basis fuel to estimate dose rates associated with storage casks containing fuel having burnup and cooling time characteristics representative of spent fuel that will be stored at the PFSF. Scaling factors are calculated for both "average" PFSF spent fuel and "relatively hot" spent fuel to be stored at the PFSF. The scaling factors are calculated using gamma and neutron source data obtained from the OCRWM LWR Radiological Database (Reference 4), using the methodology that was previously described in Revision B of the TranStor Storage Cask SAR, Section 5.4.1. Using the scaling factors, dose rates are calculated on contact with PFSF storage casks containing PFSF representative fuel at the locations of interest. The contribution from nearby casks is added to the contact dose rate of the cask where the animal is assumed to be located, resulting in a total dose rate. The dose rate is multiplied by the time the animal is assumed to be on contact with the cask over the course of a year to determine an estimated annual dose.

3.0 INPUT DATA

1. Dose rates on contact with the inlet ducts and top of a HI-STORM storage cask assumed to contain the Holtec PWR design basis fuel having 45 GWd/MTU burnup, 5 years cooling time, and 3.6% enrichment (Section 5.2.2 and Table 5.2.24 of Reference 1), are from Table 5.1.2 of Reference 1.

2. Dose rates on contact with the inlet ducts and top of a TranStor storage cask containing the BNFL PWR design basis fuel having 40 GWd/MTU burnup, 5 years cooling time, and 3.02% enrichment (Tables 5.2-1 and 5.2-5 of Reference 2), are taken from Table 5.1-1 of Reference 2.

3. Dose rates on contact with the top of a TranStor storage cask containing the BNFL BWR design basis fuel having 40 GWd/MTU burnup, 6 years cooling time, and 2.95% enrichment (Tables 5.2-2 and 5.2-6 of Reference 2), are taken from Table 5.1-1 of Reference 2.

4. The direct dose rate at a point near the inside center of a centrally located storage cask on a pad, contributed from nearby casks, was calculated to be 41.5 mrem/hr assuming that the nearby casks are HI-STORM storage casks loaded with design basis PWR spent fuel having 45 GWd/MTU burnup, 5 years cooling time, and 3.6% enrichment. The direct dose rate at a point near the inside center of a centrally located storage cask on a pad, contributed from nearby casks, was calculated to be 95.7 mrem/hr assuming that the nearby casks are TranStor storage casks loaded with design basis PWR spent fuel having 40 GWd/MTU burnup, 5 years cooling time, and 3.02% enrichment. These dose rates were calculated in Reference 6.

4.0 ASSUMPTIONS

1. Spent fuel with burnup and cooling time characteristics used by the vendors for storage cask shielding analysis, such as PWR fuel with 45 GWd/MTU burnup and 5 year cooling time for the HI-STORM storage system and PWR fuel with 40 GWd/MTU burnup and 5 year cooling time for the TranStor storage system, will not be stored at the PFSF since these design basis fuels are too "hot" for the shipping casks that will be used to transport spent fuel to the PFSF. This calculation assumes that where animals could be attracted to storage casks because of the cask temperatures being higher than ambient, the spent fuel in the cask that the animal contacts is assumed to be relatively hot (PWR fuel with 40

GWd/MTU burnup, 10 year cooling time, or BWR fuel with 35 GWd/MTU burnup, 10 year cooling time). These represent fuels that are hotter than average for spent fuel that will be stored at the PFSF. Surrounding casks are assumed to contain representative average fuel (PWR fuel with 35 GWd/MTU burnup and 20 year cooling time), discussed in PFSF SAR Sections 7.3.3.5 and 7.4.

2. Two locations on contact with storage casks were assumed for calculation of dose rates to wildlife, at the bottom of a cask on contact with the cooling air inlet ducts, and on top of the cask in the center of the lid. The only dose point identified in the vendor SARs at the bottom of the storage casks is at the inlet ducts. Dose rates were not analyzed at the concrete at the base of the casks. Both vendors present dose rates along the side of the casks near the midpoint of the fuel assemblies where maximum side dose rates would be expected to occur, but it is considered that wildlife would not be located along the vertical sides of the cask for any significant times. Dose rates on contact with the inlet ducts represent the maximum dose rates at the bottom of the casks due to scattered radiation paths through the cooling air ducts, which minimize the thickness of concrete through which the radiation must travel. Therefore, it is conservatively assumed that animals on contact with the base of a storage cask are on contact with the inlet ducts, thus maximizing calculated dose rates. The dose point identified in the vendor SARs at the top of the storage casks is at the center of the cask lid. Therefore, it is assumed that birds that perch on top of a storage cask are located in the center, on contact with the lid.

3. It is assumed that animals are in contact with the outer surfaces of the inlet ducts and do not enter the inlet ducts. This is reasonable since the design of both the HI-STORM and TranStor storage casks calls for screens over the inlet and outlet air ducts for the purpose of preventing entry of debris or small animals, which could restrict the natural convection cooling airways. HI-STORM inlet/outlet duct screens are shown in Holtec drawing no. 1561, sheet 5 of 5, Revision 7, entitled "Miscellaneous Detail of HI-STORM", included in Chapter 1 of the HI-STORM SAR. TranStor inlet duct screens are shown on SNC drawing no. TCC-001, sheet 2 of 2, Revision 1, "TranStor Storage Cask Assembly"; and TranStor outlet duct screens are shown on SNC drawing no. TCC-004, sheet 1 of 1, Revision 1, "TranStor Storage Cask Air Outlet Assembly", included in Volume III of the TranStor SAR. As a result of the screens covering the outlet ducts, it is assumed that wildlife does not spend significant time at these locations near the tops of the vertical sides of the casks.

4. In calculating the dose rate contribution from casks near the cask that the animal is assumed to be contacting, dose rates at grade elevation and at the top of a cask are calculated based on dose rates generated from the sides of the nearby casks near

the fuel midpoint, and horizontal distances from this maximum side dose rate location. This is a conservative assumption, since radiation from the spent fuel would in general have to travel a longer distance through the concrete to reach a receptor point at the bottom or tops of nearby casks (slant path), and attenuation of both neutron and gamma radiation would be greater than that associated with a receptor at the height of the fuel midpoint. This is especially conservative for the dose receptor point on contact with the center of the lid, where the dose rate contribution from nearby casks is based on the maximum cask side dose rate, near the height of the fuel midpoint. In actuality, the center of the lid would be substantially shielded by concrete of the underlying cask from much of the fuel in adjacent casks.

Dose rates from nearby casks are taken from the Reference 6 calculation, which evaluates doses to personnel involved in inlet duct clearing operations. This calculation not only calculates dose rates from casks near the affected cask based on maximum dose rates near the casks' midpoint height, but also assumes that placement of storage casks on the pads at the PFSF is in accordance with the arrangement shown in Figure 1.2-1 of the PFSF SAR (Reference 3), with a 15 ft centerline-to-centerline spacing in both the north-south and east-west directions. This assumption is conservative since the cask spacing has recently changed in the north-south direction from 15 ft to 16 ft centerline-to-centerline spacing. By assuming the neighboring casks are closer to the receptor point of interest than the design spacing, higher calculated dose rates result.

5. In order to estimate annual doses to animals that could be in close proximity to storage casks at the PFSF, it is assumed that the animal spends one-half the time (4,380 hours per year) on contact with the cask at the location of interest, and the remainder of its time at a location where dose rates are insignificant by comparison.

6. It is considered that units of mrem or rem are appropriate units for assessing the effects of radiation to wildlife. Literature that has been reviewed on the effects of radiation exposure to animals generally identifies doses in terms of mrad or rad. However, these sources evaluate the effects of gamma radiation on animals, for which the units of mrad and mrem are interchangeable. In this calculation, neutron radiation comprises a significant fraction of the total doses, and the major fraction to birds that could perch on top of TranStor storage casks. To convert from rad (measure of the energy absorbed) to rem (measure of biological damage to soft body tissue), the rad dose is multiplied by a quality factor which is dependent on the type of radiation and energy level of radiation, to quantify the biological damage resulting from the radiation absorbed. While the quality factor for gamma radiation is 1 (Table 1004(b).1 of 10 CFR 20, Reference 7), quality

factors for neutron radiation vary from 2 for low energy neutrons less than or equal to 1 E-3 MeV to 11 for higher energy neutrons with energies ranging up to 20 MeV (Table 1004(b).2 of 10 CFR 20). Tables 5.2-5 (PWR spent fuel) and 5.2-6 (BWR spent fuel) of the TranStor Storage Cask System SAR (Reference 2) identify neutron source strengths for design basis fuel of each applicable neutron energy ranging from 0.1 to 20 MeV. These tables apply to the energy of neutrons emitted from the fuel, and not to neutron energies on the outer surfaces of the storage cask. However, since the only shield material above the top of the fuel assemblies in the TranStor storage cask is steel, and since steel tends to scatter and does not appreciably moderate (decrease energy level) neutrons, it is judged that the neutron source strengths from the fuel would apply to those on top of the storage cask lid. Over the neutron energy range of interest, a quality factor of approximately 10 is representative of the average quality factors given in Table 1004(b).2 of 10 CFR 20. Therefore, doses in units of mrad could be estimated by dividing the mrem doses for neutrons given in this calculation by a factor of 10. However, presenting doses to animals in mrad could be misleading, since biological effects of neutrons would not be accounted for. This calculation only specifies doses in units of mrem, since these units account for the greater biological damage to soft body tissue produced by neutron vs. gamma radiation and are thus more informative than mrad units for the purpose of evaluating the effects of radiation on wildlife.

5.0 CALCULATION / RESULTS

Determination of Scaling Factors

Dose rates associated with storage casks are provided in the vendor storage cask SARs, based on the assumption that the canister housed in the storage cask is loaded with the vendor's design basis PWR or BWR spent fuel. However, as discussed in Section 7.3.3.5 of the PFSF SAR, no canister at the PFSF of either vendor will contain the design basis fuel used in shielding analyses for the storage casks, since the vendor's shipping casks are not permitted to transport fuel this "hot" to the PFSF. PFSF SAR Section 7.3.3.5 discusses the conservative bases for the PFSF cask array shielding analysis which assumed that all 4,000 casks at the PFSF contain PWR fuel having 40 GWd/MTU burnup and 10 years cooling time. This same relatively hot fuel is used in this calculation for estimating doses to wildlife in cases where the wildlife could be attracted to a cask containing PWR fuel due to its warm temperature. The enrichment used for this fuel is 3.02%, based on Tables 5.2-1 and 5.2-5 of Reference 2 for PWR fuel having 40 GWd/MTU burnup. PFSF SAR Section 7.4, "Estimated Onsite Collective Dose Assessment", states "Dose rate values include both gamma and neutron flux components, and are based on PWR fuel with 35 GWd/MTU burnup and 20 year cooling time. Fuel with these characteristics is considered to be representative of typical fuel that will be contained in canisters handled at the PFSF and dose estimates based on fuel with these characteristics are considered to be realistic and reflect expected personnel exposures." Fuel having these characteristics is used in this calculation to represent average fuel in storage casks.

The following is extracted from PFSF SAR Section 7.3.3.5:

> "DOE's Energy Information Administration's Service Report entitled "Spent Nuclear Fuel Discharges from U.S. Reactors - 1994" (Reference 19), provides information regarding characteristics of spent fuel in the U.S. This report was reviewed to evaluate average burnups and cooling time associated with the spent fuel inventory at the end of 1994. At this time, the spent fuel inventory from PWRs was approximately 19,000 MTU, and the inventory from BWRs approximately 11,000 MTU, for a total inventory of approximately 30,000 MTU (Table 5 of Reference 19). This spent fuel inventory represents 75% of the capacity of the PFSF. While it is recognized that provisions already exist for storage of some of this spent fuel and the PFSF will not furnish storage for this entire inventory, data associated with this spent fuel is considered representative of fuel that the PFSF could be expected to receive. The weighted average burnup (weighted by MTU) for the BWR spent fuel inventory in the U.S. was calculated from Table 6 of Reference 19 to be approximately 23.8 GWd/MTU, and the weighted average burnup for the PWR spent fuel inventory in the U.S. was calculated from Table 7 of Reference 19 to be approximately 32.4 GWd/MTU (Reference 20).

Weighted average cooling times were also calculated from the data presented in Tables 6 and 7 of Reference 19, conservatively assuming that the PFSF receives 2,000 MTU of spent fuel each year, beginning in the year 2002, until all 30,000 MTU have been received (in year 2016). It was assumed that the older spent fuel, whether BWR or PWR, is received first. Based on these assumptions, the weighted average cooling time for spent fuel assumed to be received at the PFSF was calculated to be 23.0 years (Reference 20).

Because of the large inventory of spent fuel taken into account (approximately 30,000 MTU), this is considered to be a reasonable representation of typical fuel that will be received at the PFSF. Based on this evaluation of the spent fuel inventory in existence in the U.S. at the end of 1994, it is determined that use of the 40 GWd/MTU burnup and 10-year cooled PWR fuel assumed in the shielding analyses to evaluate dose rates at the RA fence and OCA boundary from the array of 4,000 casks is conservative."

Based on the above, it is considered that, on average, BWR spent fuel has lower burnup than PWR spent fuel, and BWR fuel having 35 GWd/MTU burnup and 10 years cooling time is considered to represent relatively hot BWR spent fuel at the PFSF. The enrichment used for this fuel is 2.60%, based on Tables 5.2-2 and 5.2-6 of Reference 2 for BWR fuel having 35 GWd/MTU burnup.

Following is a summary of characteristics of spent fuel evaluated in this calculation:

Design Basis for HI-STORM storage cask, PWR (Table 5.1.2 of Reference 1)	45 GWd/MTU burnup, 5-yr cooled 3.6% enrichment
Design Basis for TranStor storage cask, PWR (Table 5.1-1 of Reference 2)	40 GWd/MTU burnup, 5-yr cooled 3.02% enrichment
Design Basis for TranStor storage cask, BWR (Table 5.1-1 of Reference 2)	40 GWd/MTU burnup, 6-yr cooled 2.95% enrichment
Relatively Hot PFSF fuel, PWR (PFSF SAR Section 7.3.3.5)	40 GWd/MTU burnup, 10-yr cooled 3.02% enrichment
Relatively Hot PFSF fuel, BWR (above paragraphs in this calculation)	35 GWd/MTU burnup, 10-yr cooled 2.60% enrichment
Representative Average PFSF fuel, PWR (PFSF SAR Section 7.4)	35 GWd/MTU burnup, 20-yr cooled 3.43% enrichment

Scaling factors are applied to assess gamma and neutron dose rates assuming casks contain either relatively hot or representative average PFSF fuel rather than design

basis fuel. These scaling factors are calculated using source data obtained from the OCRWM LWR Radiological Database (Reference 4) using the scaling method that was previously described by Sierra Nuclear Corporation in Revision B of the TranStor Storage Cask SAR, Section 5.4.1.

The following table compares a key portion of the gamma source energy spectrum associated with HI-STORM design basis PWR fuel having 45 GWd/MTU burnup and 5 year cooling time with that associated with PFSF typical fuel assumed to have 35 GWd/MTU burnup and 20 year cooling time. Gamma energy spectra are compared, and not simply the total gamma production rate, since the fraction of total energy contributed by each energy bin varies significantly with burnup and cooling time.

Table 5-1 Determination of Gamma Scaling Factor from 45 GWd/MTU Burnup and 5-Year Cooled HI-STORM PWR Design Basis Fuel to 35 GWd/MTU Burnup and 20-Year Cooled Representative Average PFSF PWR Fuel

Average Energy (MeV)	45 GWd/MTU, 5-yr cooled, 3.6% enrichment (photons/sec per metric ton heavy metal)	35 GWd/MTU, 20-yr cooled, 3.43% enrichment (photons/sec per metric ton heavy metal)	Ratio of photons/sec 35 GWd/45 GWd
0.575	7.249E+15	2.524 E+15	3.482 E-01
0.850	1.843E+15	5.149 E+13	2.794 E-02
1.250	7.632E+14	9.075 E+13	1.189 E-01
1.750	1.094E+13	1.412 E+12	1.291 E-01
2.250	4.555E+12	3.513 E+8	7.712 E-05
2.750	1.666E+11	4.001 E+8	2.402 E-03
3.50	2.139E+10	1.828 E+7	8.546 E-04

The highest ratio of the gamma source strengths is 3.482 E-1 photons/sec, associated with the relatively low average energy of 0.575 MeV. Section 9.4.2.1 of NRC NUREG-1567 (Reference 8), states "In general, only gamma sources with energies from approximately 0.8 to 2.5 MeV will contribute significantly to the dose rate through typical types of shielding, however all energy ranges should be included in shielding calculations." Based on this, the highest gamma energy ratio for the energy ranges between 0.8 and 2.5 MeV is conservatively used to scale the total gamma dose rate provided for the design basis fuels. Considering that the 0.575 MeV average energy bin will not contribute significantly to dose rates outside the storage casks, the highest ratio of the 35 GWd/45 GWd sources is associated with the 1.750 MeV energy bin, having a ratio of 1.291 E-1. This ratio (scaling factor) is conservatively applied to the total gamma dose rate to scale dose rates from all gamma energies from those associated with 45 GWd/MTU 5-year cooled fuel to those applying to 35 GWd/MTU 20-year cooled fuel.

In order to assess dose rates associated with neutrons, it is not necessary to compare neutron source energy spectra, since the fraction of total energy contributed from each energy bin does not change significantly with variations in burnup or cooling time (Sections 5.2.2 and 5.4.1 of Reference 2). For this reason, only the total neutron source strengths extracted from the OCRWM LWR Radiological Database for fuel having the two different characteristics are compared. The database indicates that PWR fuel having 45 GWd/MTU 5-year cooled fuel emits 8.904 E8 neutrons/sec per metric ton heavy metal, while the 35 GWd/MTU 20-year cooled fuel emits 1.786 E8 neutrons/sec per metric ton heavy metal, resulting in a 35 GWd/45 GWd neutron source ratio of 2.006 E-1. This factor is conservatively applied to the total neutron dose rate associated with HI-STORM storage casks containing design basis fuel to scale neutron dose rates from those associated with 45 GWd/MTU 5-year cooled fuel to those applying to 35 GWd/MTU 20-year cooled fuel.

The same methodology was applied to calculate scaling factors for the other design basis fuels, as follows:

Table 5-2 Determination of Gamma Scaling Factor from 45 GWd/MTU Burnup and 5-Year Cooled HI-STORM PWR Design Basis Fuel to 40 GWd/MTU Burnup and 10-Year Cooled Relatively Hot PFSF PWR Fuel

Average Energy (MeV)	45 GWd/MTU, 5-yr cooled, 3.6% enrichment (photons/sec per metric ton heavy metal)	40 GWd/MTU, 10-yr cooled, 3.02% enrichment (photons/sec per metric ton heavy metal)	Ratio of photons/sec 40 GWd/45 GWd
0.575	7.249 E+15	4.019 E+15	5.544 E-01
0.850	1.843 E+15	3.859 E+14	2.094 E-01
1.250	7.632 E+14	3.574 E+14	4.683 E-01
1.750	1.094 E+13	4.151 E+12	3.794 E-01
2.250	4.555 E+12	7.575 E+10	1.663 E-02
2.750	1.666 E+11	5.893 E+9	3.537 E-02
3.50	2.139 E+10	7.530 E+8	3.520 E-02

Considering that the 0.575 MeV average energy bin will not contribute significantly to dose rates outside the shipping cask, the highest gamma ratio of the 40 GWd/45 GWd sources is associated with the 1.250 MeV energy bin, having a ratio of 4.683 E-1. The database indicates that PWR fuel having 45 GWd/MTU 5-year cooled fuel emits 8.904 E8 neutrons/sec per metric ton heavy metal, while the 40 GWd/MTU 10-year cooled fuel emits 6.757 E8 neutrons/sec per metric ton heavy metal, resulting in a 40 GWd/45 GWd neutron source ratio of 7.59 E-1.

Table 5-3 Determination of Gamma Scaling Factor from 40 GWd/MTU Burnup and 5-Year Cooled TranStor PWR Design Basis Fuel to 40 GWd/MTU Burnup and 10-Year Cooled Relatively Hot PFSF PWR Fuel

Average Energy (MeV)	40 GWd/MTU, 5-yr cooled, 3.02% enrichment (photons/sec per metric ton heavy metal)	40 GWd/MTU, 10-yr cooled, 3.02% enrichment (photons/sec per metric ton heavy metal)	Ratio of photons/sec 40 GWd/45 GWd
0.575	6.450 E+15	4.019 E+15	6.231 E-01
0.850	1.605 E+15	3.859 E+14	2.404 E-01
1.250	7.145 E+14	3.574 E+14	5.002 E-01
1.750	1.015 E+13	4.151 E+12	4.090 E-01
2.250	4.436 E+12	7.575 E+10	1.708 E-02
2.750	1.666 E+11	5.893 E+9	3.537 E-02
3.50	2.140 E+10	7.530 E+8	3.519 E-02

Considering that the 0.575 MeV average energy bin will not contribute significantly to dose rates outside the storage cask or transfer casks, the highest gamma ratio of the 40 GWd burnup and 5-yr vs. 10 yr cooled sources is associated with the 1.250 MeV energy bin, having a ratio of 5.002 E-1. The database indicates that PWR fuel having 40 GWd/MTU 5-year cooled fuel emits 8.142 E+8 neutrons/sec per metric ton heavy metal, while the 40 GWd/MTU 10-year cooled fuel emits 6.757 E+8 neutrons/sec per metric ton heavy metal, resulting in a neutron source ratio of 8.299 E-1.

Table 5-4 Determination of Gamma Scaling Factor from 40 GWd/MTU Burnup and 5-Year Cooled TranStor PWR Design Basis Fuel to 35 GWd/MTU Burnup and 20-Year Cooled Representative Average PFSF PWR Fuel

Average Energy (MeV)	40 GWd/MTU, 5-yr cooled, 3.02% enrichment (photons/sec per metric ton heavy metal)	35 GWd/MTU, 20-yr cooled, 3.43% enrichment (photons/sec per metric ton heavy metal)	Ratio of photons/sec 35 GWd/45 GWd
0.575	6.450 E+15	2.524 E+15	3.913 E-01
0.850	1.605 E+15	5.149 E+13	3.208 E-02
1.250	7.145 E+14	9.075 E+13	1.270 E-01
1.750	1.015 E+13	1.412 E+12	1.391 E-01
2.250	4.436 E+12	3.513 E+8	7.919 E-05
2.750	1.666 E+11	4.001 E+8	2.402 E-03
3.50	2.140 E+10	1.828 E+7	8.542 E-04

Considering that the 0.575 MeV average energy bin will not contribute significantly to dose rates outside the storage cask or transfer casks, the highest gamma ratio of the 35 GWd/40 GWd sources is associated with the 1.750 MeV energy bin, having a ratio of 1.391 E-1. The database indicates that PWR fuel having 40 GWd/MTU 5-year cooled fuel emits 8.142 E+8 neutrons/sec per metric ton heavy metal, while the 35 GWd/MTU 20-year cooled fuel emits 1.786 E+8 neutrons/sec per metric ton heavy metal, resulting in a 35 GWd/40 GWd neutron source ratio of 2.194 E-1.

Table 5-5 Determination of Gamma Scaling Factor from 40 GWd/MTU Burnup and 6-Year Cooled TranStor BWR Design Basis Fuel to 35 GWd/MTU Burnup and 10-Year Cooled Relatively Hot PFSF BWR Fuel

Average Energy (MeV)	40 GWd/MTU, 6-yr cooled, 2.95% enrichment (photons/sec per metric ton heavy metal)	35 GWd/MTU, 10-yr cooled, 2.60% enrichment (photons/sec per metric ton heavy metal)	Ratio of photons/sec 35 GWd/40 GWd
0.575	6.262 E+15	3.678 E+15	5.874 E-01
0.850	1.421 E+15	3.504 E+14	2.466 E-01
1.250	5.987 E+14	2.965 E+14	4.952 E-01
1.750	8.591 E+12	3.842 E+12	4.472 E-01
2.250	1.686 E+12	6.215 E+10	3.686 E-02
2.750	8.182 E+10	5.160 E+09	6.307 E-02
3.50	1.062 E+10	6.783 E+08	6.387 E-02

Considering that the 0.575 MeV average energy bin will not contribute significantly to dose rates outside the shipping cask, the highest ratio of the 35 GWd/40 GWd sources is associated with the 1.250 MeV energy bin, having a gamma ratio of 4.952 E-01. The database indicates that BWR fuel having 40 GWd/MTU 6-year cooled emits 1.550 E+9 neutrons/sec per metric ton heavy metal, while the 35 GWd/MTU burnup 10-year cooled BWR fuel emits 7.956 E+8 neutrons/sec per metric ton heavy metal, resulting in a 35 GWd/40 GWd neutron source ratio of 5.133 E-1.

The following table summarizes the scaling factors used in this calculation:

Table 5-6 Summary of Scaling Factors for Scaling Dose Rates Associated with Design Basis Fuels to Those Representative of Average and Relatively Hot PFSF Fuel

Applicable Cask(s) and Spent Fuel Characteristics	Gamma Scaling Factor	Neutron Scaling Factor
Scale from HI-STORM design basis PWR fuel having 45 GWd/MTU burnup, 5-yr cooled, relatively low enrichment; to PFSF average PWR fuel having 35 GWd/MTU burnup, 20-yr cooled, average enrichment	0.129	0.201
Scale from HI-STORM design basis PWR fuel having 45 GWd/MTU burnup, 5-yr cooled, relatively low enrichment; to PFSF relatively hot PWR fuel having 40 GWd/MTU burnup, 10-yr cooled, low enrichment	0.468	0.759
Scale from TranStor design basis PWR fuel having 40 GWd/MTU burnup, 5-yr cooled, low enrichment; to PFSF relatively hot PWR fuel having 40 GWd/MTU burnup, 10-yr cooled, low enrichment	0.500	0.830
Scale from TranStor design basis PWR fuel having 40 GWd/MTU burnup, 5-yr cooled, low enrichment; to PFSF average PWR fuel having 35 GWd/MTU burnup, 20-yr cooled, average enrichment	0.139	0.219
Scale from TranStor design basis BWR fuel having 40 GWd/MTU burnup, 6-yr cooled, low enrichment; to PFSF relatively hot BWR fuel having 35 GWd/MTU burnup, 10-yr cooled, low enrichment	0.495	0.513

Contribution of Dose Rates from Casks Adjacent to and Nearby the Cask where the Animal is Assumed to be Located

In addition to the cask that the animal is assumed to be in contact with, Stone & Webster Calculation 05996.02-UR-5 (Reference 6) calculated dose rates from adjacent and nearby casks, conservatively assuming the dose receptor is located near the center of a storage pad where it is in line-of-sight with portions of canisters of 7 other nearby casks. This calculation evaluated dose rates for two cases: 1) where the nearby casks in the array are assumed to be HI-STORM storage casks, and 2) where the nearby casks in the array are assumed to be TranStor storage casks. For both cases, the receptor point was located approximately 9 inches away from the cask of interest, toward the pad centerline, placing it approximately 1 meter from the nearest cask in the opposite column on the same storage pad. For conservatism, self shielding of adjacent casks whose canisters were partially blocked from the receptor point was neglected and it was assumed that all of the radiation emitted from the partially blocked canisters has a direct path to the receptor point. Following are dose rates from nearby casks for each of the two cases evaluated.

Neighboring Casks Assumed to be HI-STORM Storage Casks

The Reference 6 calculation determined that the dose rate from canisters in nearby casks having some line-of-sight to the receptor point was 41.5 mrem/hr, assuming nearby casks to be HI-STORM storage casks containing design basis PWR fuel having 45 GWd/MTU burnup, 5-yr cooled, and relatively low enrichment for the burnup (3.6%). In order to account for radiation from storage casks whose canisters are completely shielded from the receptor point, it was assumed in Reference 6 that scattered radiation contributes an additional 25%, which increases the dose rate from adjacent casks to (41.5 mrem/hr) (1.25) = 51.9 mrem/hr.

For purposes of this calculation, it is assumed that casks adjacent to and nearby the cask that the animal is assumed to be in contact with contain average or typical PFSF fuel, assumed to be PWR spent fuel having 35 GWd/MTU burnup, 20 years cooling time, and average enrichment, as discussed above. The dose rates at 1 meter from the side of a HI-STORM storage cask containing design basis PWR fuel having 45 GWd/MTU burnup, 5-yr cooled, and relatively low enrichment for the burnup (3.6%) are provided in HI-STORM SAR Table 5.1.5, and total 17.42 mrem/hr, consisting of 16.64 mrem/hr gamma (95.5%) and 0.78 mrem/hr neutron (4.5%). Applying this breakdown to the 51.9 mrem/hr dose rate from nearby casks results in 49.6 mrem/hr gamma and 2.34 mrem/hr neutron. Next, these values are multiplied by the appropriate scaling factors from Table 5-6 to reduce the dose rates to those representative of casks containing PWR spent fuel having 35 GWd/MTU burnup, 20 years cooling time, and average enrichment:

gamma	(49.6 mrem/hr) (0.129) =	6.40 mrem/hr
neutron	(2.34 mrem/hr) (0.201) =	0.47 mrem/hr
total	=	6.87 mrem/hr

Based on the above, the following paragraphs use 6.87 mrem/hr as the dose rate contribution from HI-STORM neighboring casks, which assumes the nearby casks contain average PFSF spent fuel.

Neighboring Casks Assumed to be TranStor Storage Casks

The Reference 6 calculation determined that the dose rate from canisters in nearby casks having some line-of-sight to the receptor point was 95.7 mrem/hr, assuming nearby casks to be TranStor storage casks containing design basis PWR fuel having 40 GWd/MTU burnup, 5-yr cooled, and low enrichment for the burnup (3.02%). In order to account for radiation from storage casks whose canisters are completely shielded from the receptor point, it was assumed in Reference 6 that scattered radiation contributes an additional 25%, which increases the dose rate from adjacent casks to (95.7 mrem/hr) (1.25) = 119.6 mrem/hr.

For purposes of this calculation, it is assumed that casks adjacent to and nearby the cask that the animal is assumed to be in contact with contain average or typical PFSF fuel, assumed to be PWR spent fuel having 35 GWd/MTU burnup, 20-years cooling time, and average enrichment, as discussed above. The dose rates at 1 meter from the side of a TranStor storage cask containing design basis PWR fuel having 40 GWd/MTU burnup, 5-yr cooled, and relatively low enrichment for the burnup (3.02%) are provided in TranStor SAR Table 5.1-1, and total 42.95 mrem/hr, consisting of 40.38 mrem/hr gamma (94.0%) and 2.57 mrem/hr neutron (6.0%). Applying this breakdown to the 119.6 mrem/hr dose rate from nearby casks results in 112.4 mrem/hr gamma and 7.18 mrem/hr neutron. Next, these values are multiplied by the appropriate scaling factors from Table 5-6 to reduce the dose rates to those representative of casks containing PWR spent fuel having 35 GWd/MTU burnup, 20-years cooling time, and average enrichment:

gamma	(112.4 mrem/hr) (0.139)	=	15.6 mrem/hr
neutron	(7.18 mrem/hr) (0.219)	=	1.57 mrem/hr
total		=	17.2 mrem/hr

Based on the above, the following paragraphs use 17.2 mrem/hr as the dose rate contribution from TranStor neighboring casks, which assumes the nearby casks contain average PFSF spent fuel.

Dose Rates to Wildlife Inside the Restricted Area Based on HI-STORM Storage Casks

Dose On Contact with HI-STORM Cask Air Inlet Duct

Dose rates of 13.51 mrem/hr (consisting of 10.75 mrem/hr gamma and 2.76 mrem/hr neutron) are calculated to occur on contact with an inlet duct of a HI-STORM storage cask containing design basis PWR fuel having 45 GWd/MTU burnup and 5 -year cooling time (HI-STORM SAR Table 5.1.2). It is assumed that the animal is on contact with an inlet duct of a cask containing relatively hot PWR spent fuel assumed to have 40 GWd/MTU burnup and 10 years cooling time (PFSF SAR Section 7.3.3.5), and is surrounded by casks that contain average PFSF fuel, assumed to have 35 GWd/MTU burnup and 20 years cooling time (PFSF SAR Section 7.4). It is conservative to assume the animal is on contact with the inlet duct of a cask containing relatively hot PFSF fuel, since dose rates at the inlet ducts are higher than dose rates at the concrete at the base of the cask away from the inlet ducts due to scattered radiation paths through the cooling air ducts. The temperature at the inlet duct is the same as ambient due to ambient air being drawn into the duct. An animal trying to warm itself would be more likely to contact the concrete at the base of the cask which would be at a higher temperature than the air inlet, but have lower dose rates. Applying the appropriate

scaling factors from Table 5-6 to calculate the dose rate from contact with the inlet ducts:

gamma	(10.75 mrem/hr) (0.468)	= 5.03 mrem/hr
neutron	(2.76 mrem/hr) (0.759)	= 2.09 mrem/hr
total		= 7.12 mrem/hr

These assumptions result in dose rates of 7.12 mrem/hr to the animal on contact with the inlet duct from the contact cask and 6.87 mrem/hr from adjacent casks, for a total dose rate of 14.0 mrem/hr (11.43 mrem/hr gamma and 2.56 mrem/hr neutron). Assuming that the animal spends 50% of its time in contact with the inlet duct, and the remainder of its time at a location where dose rates are insignificant by comparison, its dose over the course of a year would be:

(14.0 mrem/hr) (8,760 hrs/yr) (0.50) (1 rem / 1000 mrem) = 61.3 rem

Dose On Contact with Top of HI-STORM Storage Cask

Dose rates of 4.91 mrem/hr (consisting of 1.31 mrem/hr gamma and 3.60 mrem/hr neutron) are calculated to occur on contact with the center of the lid of a HI-STORM storage cask containing design basis PWR fuel having 45 GWd/MTU burnup and 5 - year cooling time (HI-STORM SAR Table 5.1.2). It is assumed that a bird is on contact with the lid of a HI-STORM cask containing relatively hot PWR spent fuel assumed to have 40 GWd/MTU burnup and 10 years cooling time (PFSF SAR Section 7.3.3.5), and is surrounded by casks that contain average PFSF fuel, assumed to have 35 GWd/MTU burnup and 20 years cooling time (PFSF SAR Section 7.4). Applying the appropriate scaling factors from Table 5-6 to calculate the top contact dose rate from the underlying cask:

gamma	(1.31 mrem/hr) (0.468)	= 0.613 mrem/hr
neutron	(3.60 mrem/hr) (0.759)	= 2.73 mrem/hr
total		= 3.34 mrem/hr

It is conservative to add the 6.87 mrem/hr from adjacent casks (6.40 mrem/hr gamma and 0.47 mrem/hr neutron) that applies near cask mid-height at the cask periphery, since radial radiation emitted from the sides at mid-height of nearby casks would be shielded from the lid by concrete of the cask upon which the bird is assumed to perch). In addition, radiation would have to travel at a "slant path" from the fuel assemblies in nearby casks to reach the receptor point on top of the cask of interest, resulting in radiation traveling through greater distances of concrete to escape the nearby casks than considered in using the dose rate at the side of a cask near the midpoint of the fuel. Conservatively adding the 6.87 from nearby casks to the contact top dose rate results in a total dose rate of 10.21 mrem/hr on top of the cask (consisting of 0.61 + 6.40 = 7.01 mrem/hr gamma and 2.73 + 0.47 = 3.20 mrem/hr neutron).

Assuming that the bird spends 50% of its time at this location over the course of a year, and the remainder of its time at a location where dose rates are insignificant by comparison, its dose would be:

(10.2 mrem /hr) (8,760 hrs/yr) (0.50) (1 rem / 1000 mrem) = 44.7 rem

Dose Rates to Wildlife Inside the Restricted Area Based on TranStor Storage Casks

Dose On Contact with TranStor Cask Air Inlet Duct

Dose rates of 16.58 mrem/hr (consisting of 12.75 mrem/hr gamma and 3.83 mrem/hr neutron) are calculated to occur on contact with an inlet duct of a TranStor storage cask containing design basis PWR fuel having 40 GWd/MTU burnup and 5-year cooling time (TranStor SAR Table 5.1-1). As was done for the HI-STORM storage cask, above, it is assumed that the animal is on contact with an inlet duct of a cask containing relatively hot PWR spent fuel assumed to have 40 GWd/MTU burnup and 10-years cooling time (PFSF SAR Section 7.3.3.5), and is surrounded by casks that contain average PFSF fuel, assumed to have 35 GWd/MTU burnup and 20-years cooling time (PFSF SAR Section 7.4). Applying the appropriate scaling factors from Table 5-6 to calculate the dose rate from contact with the inlet ducts:

gamma	(12.75 mrem/hr) (0.500)	= 6.38 mrem/hr
neutron	(3.83 mrem/hr) (0.830)	= 3.18 mrem/hr
total		= 9.56 mrem/hr

These assumptions result in dose rates of 9.56 mrem/hr to the animal on contact with the inlet duct from the contact cask and 17.2 mrem/hr from adjacent casks, for a total dose rate of 26.8 mrem/hr (consisting of 6.38 + 15.6 = 22.0 mrem/hr gamma and 3.18 + 1.57 = 4.75 mrem/hr neutron). Assuming that the animal spends 50% of its time in contact with the inlet duct, and the remainder of its time at a location where dose rates are insignificant by comparison, its dose over the course of a year would be:

(26.8 mrem/hr) (8,760 hrs/yr) (0.50) (1 rem / 1000 mrem) = 117 rem

Dose On Contact with Top of TranStor Storage Cask Containing PWR Fuel

Dose rates of 129.18 mrem/hr (consisting of 12.29 mrem/hr gamma and 116.89 mrem/hr neutron) are calculated to occur on contact with the center of the lid of a TranStor storage cask containing design basis PWR fuel having 40 GWd/MTU burnup, 5-year cooling time, and 3.02% enrichment (TranStor SAR Table 5.1-1). It is assumed that a bird is on contact with the lid of TranStor cask containing relatively hot PWR spent fuel assumed to have 40 GWd/MTU burnup and 10-years cooling time (PFSF SAR Section 7.3.3.5), and is surrounded by casks that contain average PFSF fuel,

assumed to have 35 GWd/MTU burnup and 20 years cooling time (PFSF SAR Section 7.4). Applying the appropriate scaling factors from Table 5-6 to calculate the top contact dose rate from the underlying cask:

gamma	(12.29 mrem/hr) (0.500)	= 6.15 mrem/hr
neutron	(116.89 mrem/hr) (0.830)	= 97.02 mrem/hr
total		= 103.2 mrem/hr

It is conservative to add the 17.2 mrem/hr from adjacent casks (15.6 mrem/hr gamma and 1.57 mrem/hr neutron) that applies near cask mid-height at the cask periphery, since radial radiation emitted from the sides at mid-height of nearby casks would be shielded from the lid by concrete of the cask upon which the bird is assumed to perch). In addition, radiation would have to travel at a "slant path" from the fuel assemblies in nearby casks to reach the receptor point on top of the cask of interest, resulting in radiation traveling through greater distances of concrete to escape the nearby casks than considered in using the dose rate at the side of a cask near the midpoint of the fuel. Conservatively adding the 17.2 mrem/hr from nearby casks to the contact top dose rate results in a total dose rate of 120 mrem/hr on top of the cask (consisting of 6.15 + 15.6 = 21.8 mrem/hr gamma and 97.02 + 1.57 = 98.6 mrem/hr neutron).

Assuming that the bird spends 50% of its time at this location over the course of a year, and the remainder of its time at a location where dose rates are insignificant by comparison, its annual dose would be:

(120 mrem /hr) (8,760 hrs/yr) (0.50) (1 rem / 1000 mrem) = 526 rem

Dose On Contact with Top of TranStor Storage Cask Containing BWR Fuel

Dose rates of 256.28 mrem/hr (consisting of 15.33 mrem/hr gamma and 240.95 mrem/hr neutron) are calculated to occur on contact with the center of the lid of a TranStor storage cask containing design basis BWR fuel having 40 GWd/MTU burnup, 6 -year cooling time, and 2.95% enrichment (TranStor SAR Table 5.1-1). It is assumed that a bird is on contact with the lid of TranStor cask containing relatively hot BWR spent fuel assumed to have 35 GWd/MTU burnup and 10 years cooling time (refer to above Section entitled Determination of Scaling Factors). This cask is assumed to be surrounded by casks that contain average PFSF fuel (PWR fuel, which produces a higher side dose rate than a cask containing BWR fuel), with 35 GWd/MTU burnup and 20 years cooling time (PFSF SAR Section 7.4). Applying the appropriate scaling factors from Table 5-6 to calculate the top contact dose rate from the underlying cask:

gamma	(15.33 mrem/hr) (0.495)	= 7.59 mrem/hr
neutron	(240.95 mrem/hr) (0.513)	= 123.61 mrem/hr
total		= 131.2 mrem/hr

Conservatively adding the 17.2 mrem/hr from nearby casks to the contact top dose rate results in a total dose rate of 148 mrem/hr on top of the cask (consisting of 7.59 + 15.6 = 23.2 mrem/hr gamma and 123.61 + 1.57 = 125.2 mrem/hr neutron).

Assuming that the bird spends 50% of its time at this location over the course of a year, and the remainder of its time at a location where dose rates are insignificant by comparison, its annual dose would be:

(148 mrem /hr) (8,760 hrs/yr) (0.50) (1 rem / 1000 mrem) = 648 rem

6.0 CONCLUSION

Following is a compilation of dose rates and annual doses assuming the animal is on contact with a storage cask 50% of the time, as calculated above:

Table 6-1 Summary of Dose Rates and Annual Doses at Locations of Interest in Contact with Storage Casks at the PFSF

Receptor Point Location	Gamma Dose Rate (mrem/hr)	Neutron Dose Rate (mrem/hr)	Total Dose Rate (mrem/hr)	Annual Dose Assuming Animal Spends 1/2 Year in Contact with Cask (Rem/year)
Contact with Air Inlet Duct of HI-STORM cask, PWR fuel	11.43	2.56	14.0	61.3
Contact with Top of HI-STORM cask (center lid), PWR fuel	7.01	3.20	10.2	44.7
Contact with Air Inlet Duct of TranStor cask, PWR fuel	22.0	4.75	26.8	117
Contact with Top of TranStor cask (center lid), PWR fuel	21.8	98.6	120	526
Contact with Top of TranStor cask (center lid), BWR fuel	23.2	125.2	148	648

7.0 REFERENCES

1. Final Safety Analysis Report for the Holtec International Storage and Transfer Operation Reinforced Module Cask System (HI-STORM 100 Cask System), Holtec Report HI-2002444, Docket 72-1014, Revision 0, July 2000.

2. Safety Analysis Report for the TranStor Storage Cask System, SNC-96-72SAR, Sierra Nuclear Corporation, Docket 72-1023, Revision C, November 1998.

3. Private Fuel Storage Facility Safety Analysis Report, Private Fuel Storage L.L.C., Revision 20.

4. DOE/RW-0184-R1, "Characteristics of Potential Repository Wastes," Office of Civilian Radioactive Waste Management (OCRWM), U.S. Department of Energy, July 1992; LWR Radiological Database.

5. SNC Design Calculation No. PFS01.10.02.03, Rev. 0, Private Fuel Storage Skyshine II ISFSI Dose Rate Calculation (4000 Casks), April 10, 1997.

6. Stone & Webster Calculation 05996.02-UR-5, Rev. 2, Dose Rate Estimates from Storage Cask Inlet Duct Clearing Operations, March 14, 2001.

7. 10 CFR 20, Standards for Protection Against Radiation.

8. NRC NUREG-1567, Standard Review Plan for Spent Fuel Dry Storage Facilities, Draft Report for Comment, U.S. NRC, Office of Nuclear Material Safety and Safeguards, October 1996.

ATTACHMENT A

LWR Radiological DATABASE

PHOTONS REPORT
REACTOR TYPE & BURNUP: PWR 45000
ENRICHMENT: 3.60%
DECAY TIME: 5 YEARS
The data is shown in Photons per second/MTIHM

ENERGY (MeV)	PHO/SEC	* TOTAL
1.000E-02	3.967E+15	21.64%
2.500E-02	9.380E+14	5.12%
3.750E-02	1.027E+15	5.60%
5.750E-02	7.849E+14	4.28%
8.500E-02	5.150E+14	2.81%
1.250E-01	5.331E+14	2.91%
2.250E-01	4.264E+14	2.33%
3.750E-01	2.544E+14	1.39%
5.750E-01	7.249E+15	39.55%
8.500E-01	1.843E+15	10.05%
1.250E+00	7.632E+14	4.16%
1.750E+00	1.094E+13	0.06%
2.250E+00	4.555E+12	0.02%
2.750E+00	1.666E+11	0.00%
3.500E+00	2.139E+10	0.00%
5.000E+00	3.645E+07	0.00%
7.000E+00	4.434E+06	0.00%
9.500E+00	5.094E+05	0.00%
TOTAL	*1.832E+16	99.93%*

*This value was obtained by interpolating TOTALS values from ORIGEN2 runs to the specific burnup/enrichment/decay time combination you specified. Percentages have been calculated from this interpolated value and may not add up to 100 percent in all cases.

LWR Radiological DATABASE

RADIOLOGICAL TOTALS REPORT
REACTOR TYPE & BURNUP: PWR 45000
ENRICHMENT: 3.60%
DECAY TIME: 5 YEARS

==========
==
CURIES/MTIHM
==========

ACTIVATION PRODUCTS	8.268E+03
ACTINIDES AND DAUGHTERS	1.462E+05
FISSION PRODUCTS	5.839E+05
TOTAL	7.388E+05

WATTS/MTIHM
==========

ACTIVATION PRODUCTS	8.939E+01
ACTINIDES AND DAUGHTERS	5.072E+02
FISSION PRODUCTS	2.087E+03
TOTAL	2.689E+03

GRAMS/MTIHM
==========

ACTIVATION PRODUCTS	4.403E+05
ACTINIDES AND DAUGHTERS	9.535E+05
FISSION PRODUCTS	4.624E+04
TOTAL	1.440E+06

NEUTRONS/MTIHM
==========

ALPHA,N NEUTRONS	1.518E+07
SPONTANEOUS FISSION NEUTRONS	8.751E+08
TOTAL NEUTRONS	8.904E+08

PHOTONS per Second/MTIHM
==========

TOTAL PHOTONS/SEC	1.833E+16

*Some of the above values were obtained by interpolating TOTALS values from ORIGEN2 runs to the specific burnup/enrichment/decay time combination you specified.

LWR Radiological DATABASE

PHOTONS REPORT
REACTOR TYPE & BURNUP: PWR 35000
ENRICHMENT: 3.43%
DECAY TIME: 20 YEARS
The data is shown in Photons per second/MTIHM

ENERGY (MeV)	PHO/SEC	% TOTAL
1.000E-02	1.541E+15	26.88%
2.500E-02	3.098E+14	5.40%
3.750E-02	3.752E+14	6.55%
5.750E-02	3.239E+14	5.65%
8.500E-02	1.709E+14	2.98%
1.250E-01	1.388E+14	2.42%
2.250E-01	1.435E+14	2.50%
3.750E-01	6.044E+13	1.05%
5.750E-01	2.524E+15	44.03%
8.500E-01	5.149E+13	0.90%
1.250E+00	9.075E+13	1.58%
1.750E+00	1.412E+12	0.02%
2.250E+00	3.513E+08	0.00%
2.750E+00	4.001E+08	0.00%
3.500E+00	1.828E+07	0.00%
5.000E+00	7.547E+06	0.00%
7.000E+00	8.698E+05	0.00%
9.500E+00	9.989E+04	0.00%
TOTAL	*5.731E+15	99.99%*

*This value was obtained by interpolating TOTALS values from ORIGEN2 runs to the specific burnup/enrichment/decay time combination you specified. Percentages have been calculated from this interpolated value and may not add up to 100 percent in all cases.

LWR Radiological DATABASE

RADIOLOGICAL TOTALS REPORT
REACTOR TYPE & BURNUP: PWR 35000
ENRICHMENT: 3.43%
DECAY TIME: 20 YEARS

==========
==

CURIES/MTIHM
==========

ACTIVATION PRODUCTS	1.146E+03
ACTINIDES AND DAUGHTERS	6.022E+04
FISSION PRODUCTS	2.355E+05
TOTAL	2.968E+05

WATTS/MTIHM
==========

ACTIVATION PRODUCTS	1.005E+01
ACTINIDES AND DAUGHTERS	2.632E+02
FISSION PRODUCTS	6.752E+02
TOTAL	9.505E+02

GRAMS/MTIHM
==========

ACTIVATION PRODUCTS	4.403E+05
ACTINIDES AND DAUGHTERS	9.636E+05
FISSION PRODUCTS	3.604E+04
TOTAL	1.440E+06

NEUTRONS/MTIHM
==========

ALPHA,N NEUTRONS	7.570E+06
SPONTANEOUS FISSION NEUTRONS	1.708E+08
TOTAL NEUTRONS	1.786E+08

PHOTONS per Second/MTIHM
==========

TOTAL PHOTONS/SEC	5.732E+15

*Some of the above values were obtained by interpolating TOTALS values from ORIGEN2 runs to the specific burnup/enrichment/decay time combination you specified.

LWR Radiological DATABASE

PHOTONS REPORT

REACTOR TYPE & BURNUP: PWR 40000

ENRICHMENT: 3.02%

DECAY TIME: 10 YEARS

The data is shown in Photons per second/MTIHM

ENERGY (MeV)	PHO/SEC	% TOTAL
1.000E-02	2.179E+15	23.53%
2.500E-02	4.669E+14	5.04%
3.750E-02	5.846E+14	6.31%
5.750E-02	4.362E+14	4.71%
8.500E-02	2.577E+14	2.78%
1.250E-01	2.568E+14	2.77%
2.250E-01	2.100E+14	2.27%
3.750E-01	1.032E+14	1.11%
5.750E-01	4.019E+15	43.40%
8.500E-01	3.859E+14	4.17%
1.250E+00	3.574E+14	3.86%
1.750E+00	4.151E+12	0.04%
2.250E+00	7.571E+10	0.00%
2.750E+00	5.843E+09	0.00%
3.500E+00	7.530E+08	0.00%
5.000E+00	2.913E+07	0.00%
7.000E+00	3.359E+06	0.00%
9.500E+00	3.859E+05	0.00%
TOTAL	9.261E+15	100.00%

LWR Radiological DATABASE

RADIOLOGICAL TOTALS REPORT
REACTOR TYPE & BURNUP: PWR 40000
ENRICHMENT: 3.02%
DECAY TIME: 10 YEARS

==========
==

CURIES/MTIHM
==========

ACTIVATION PRODUCTS	3.999E+03
ACTINIDES AND DAUGHTERS	1.180E+05
FISSION PRODUCTS	3.515E+05
TOTAL	4.735E+05

WATTS/MTIHM
==========

ACTIVATION PRODUCTS	4.476E+01
ACTINIDES AND DAUGHTERS	4.360E+02
FISSION PRODUCTS	1.058E+03
TOTAL	1.539E+03

GRAMS/MTIHM
==========

ACTIVATION PRODUCTS	4.403E+05
ACTINIDES AND DAUGHTERS	9.589E+05
FISSION PRODUCTS	4.111E+04
TOTAL	1.440E+06

NEUTRONS/MTIHM
==========

ALPHA,N NEUTRONS	1.295E+07
SPONTANEOUS FISSION NEUTRONS	6.627E+08
TOTAL NEUTRONS	6.757E+08

PHOTONS per Second/MTIHM
==========

TOTAL PHOTONS/SEC	9.261E+15

LWR Radiological DATABASE

PHOTONS REPORT

REACTOR TYPE & BURNUP: PWR 40000

ENRICHMENT: 3.02%

DECAY TIME: 5 YEARS

The data is shown in Photons per second/MTIHM

ENERGY (MeV)	PHO/SEC	% TOTAL
1.000E-02	3.573E+15	21.75%
2.500E-02	8.556E+14	5.21%
3.750E-02	9.276E+14	5.65%
5.750E-02	7.107E+14	4.33%
8.500E-02	4.658E+14	2.84%
1.250E-01	4.825E+14	2.94%
2.250E-01	3.878E+14	2.36%
3.750E-01	2.368E+14	1.44%
5.750E-01	6.450E+15	39.26%
8.500E-01	1.605E+15	9.77%
1.250E+00	7.145E+14	4.35%
1.750E+00	1.015E+13	0.06%
2.250E+00	4.436E+12	0.03%
2.750E+00	1.666E+11	0.00%
3.500E+00	2.140E+10	0.00%
5.000E+00	3.519E+07	0.00%
7.000E+00	4.058E+06	0.00%
9.500E+00	4.662E+05	0.00%
TOTAL	1.642E+16	99.96%

LWR Radiological DATABASE

RADIOLOGICAL TOTALS REPORT
REACTOR TYPE & BURNUP: PWR 40000
ENRICHMENT: 3.02%
DECAY TIME: 5 YEARS

==========
==

CURIES/MTIHM
==========

ACTIVATION PRODUCTS	8.083E+03
ACTINIDES AND DAUGHTERS	1.469E+05
FISSION PRODUCTS	5.243E+05
TOTAL	6.793E+05

WATTS/MTIHM
==========

ACTIVATION PRODUCTS	8.736E+01
ACTINIDES AND DAUGHTERS	4.482E+02
FISSION PRODUCTS	1.864E+03
TOTAL	2.400E+03

GRAMS/MTIHM
==========

ACTIVATION PRODUCTS	4.403E+05
ACTINIDES AND DAUGHTERS	9.589E+05
FISSION PRODUCTS	4.111E+04
TOTAL	1.440E+06

NEUTRONS/MTIHM
==========

ALPHA,N NEUTRONS	1.342E+07
SPONTANEOUS FISSION NEUTRONS	8.008E+08
TOTAL NEUTRONS	8.142E+08

PHOTONS per Second/MTIHM
==========

TOTAL PHOTONS/SEC	1.643E+16

LWR Radiological DATABASE

PHOTONS REPORT
REACTOR TYPE & BURNUP: BWR 40000
ENRICHMENT: 2.95%
DECAY TIME: 6 YEARS
The data is shown in Photons per second/MTIHM

ENERGY (MeV)	PHO/SEC	% TOTAL
1.000E-02	3.082E+15	20.81%
2.500E-02	7.206E+14	4.87%
3.750E-02	8.419E+14	5.68%
5.750E-02	6.037E+14	4.08%
8.500E-02	3.930E+14	2.65%
1.250E-01	4.206E+14	2.84%
2.250E-01	3.165E+14	2.14%
3.750E-01	1.893E+14	1.28%
5.750E-01	6.262E+15	42.28%
8.500E-01	1.421E+15	9.59%
1.250E+00	5.987E+14	4.04%
1.750E+00	8.591E+12	0.06%
2.250E+00	1.656E+12	0.01%
2.750E+00	8.142E+10	0.00%
3.500E+00	1.062E+10	0.00%
5.000E+00	6.706E+07	0.00%
7.000E+00	7.733E+06	0.00%
9.500E+00	8.884E+05	0.00%
TOTAL	*1.486E+16	100.33%*

*This value was obtained by interpolating TOTALS values from ORIGEN2 runs to the specific burnup/enrichment/decay time combination you specified. Percentages have been calculated from this interpolated value and may not add up to 100 percent in all cases.

LWR Radiological DATABASE

RADIOLOGICAL TOTALS REPORT
REACTOR TYPE & BURNUP: BWR 40000
ENRICHMENT: 2.95%
DECAY TIME: 6 YEARS

==========
==

CURIES/MTIHM
==========

ACTIVATION PRODUCTS	6.546E+03
ACTINIDES AND DAUGHTERS	1.586E+05
FISSION PRODUCTS	4.846E+05
TOTAL	6.498E+05

WATTS/MTIHM
==========

ACTIVATION PRODUCTS	6.565E+01
ACTINIDES AND DAUGHTERS	7.197E+02
FISSION PRODUCTS	1.671E+03
TOTAL	2.458E+03

GRAMS/MTIHM
==========

ACTIVATION PRODUCTS	7.258E+05
ACTINIDES AND DAUGHTERS	9.547E+05
FISSION PRODUCTS	4.542E+04
TOTAL	1.726E+06

NEUTRONS/MTIHM
==========

ALPHA,N NEUTRONS	2.187E+07
SPONTANEOUS FISSION NEUTRONS	1.528E+09
TOTAL NEUTRONS	1.550E+09

PHOTONS per Second/MTIHM
==========

TOTAL PHOTONS/SEC	1.481E+16

*Some of the above values were obtained by interpolating TOTALS values from ORIGEN2 runs to the specific burnup/enrichment/decay time combination you specified.

LWR Radiological DATABASE

PHOTONS REPORT

REACTOR TYPE & BURNUP: BWR 35000

ENRICHMENT: 2.60%

DECAY TIME: 10 YEARS

The data is shown in Photons per second/MTIHM

ENERGY (MeV)	PHO/SEC	% TOTAL
1.000E-02	1.955E+15	23.35%
2.500E-02	4.190E+14	5.00%
3.750E-02	5.304E+14	6.34%
5.750E-02	3.906E+14	4.67%
8.500E-02	2.309E+14	2.76%
1.250E-01	2.335E+14	2.79%
2.250E-01	1.872E+14	2.24%
3.750E-01	9.360E+13	1.12%
5.750E-01	3.678E+15	43.93%
8.500E-01	3.504E+14	4.19%
1.250E+00	2.965E+14	3.54%
1.750E+00	3.842E+12	0.05%
2.250E+00	6.215E+10	0.00%
2.750E+00	5.160E+09	0.00%
3.500E+00	6.783E+08	0.00%
5.000E+00	3.433E+07	0.00%
7.000E+00	3.960E+06	0.00%
9.500E+00	4.550E+05	0.00%
TOTAL	*8.369E+15	99.96%*

*This value was obtained by interpolating TOTALS values from ORIGEN2 runs to the specific burnup/enrichment/decay time combination you specified. Percentages have been calculated from this interpolated value and may not add up to 100 percent in all cases.

```
LWR Radiological DATABASE
                          RADIOLOGICAL TOTALS REPORT
                     REACTOR TYPE & BURNUP:       BWR 35000
                        ENRICHMENT:        2.60%
                      DECAY TIME:       10 YEARS


==============================================================================
==
CURIES/MTIHM
============
ACTIVATION PRODUCTS                 3.294E+03
ACTINIDES AND DAUGHTERS             1.160E+05
FISSION PRODUCTS                    3.172E+05
TOTAL                               4.366E+05

WATTS/MTIHM
===========
ACTIVATION PRODUCTS                 3.480E+01
ACTINIDES AND DAUGHTERS             4.670E+02
FISSION PRODUCTS                    9.534E+02
TOTAL                               1.468E+03

GRAMS/MTIHM
===========
ACTIVATION PRODUCTS                 7.258E+05
ACTINIDES AND DAUGHTERS             9.614E+05
FISSION PRODUCTS                    3.794E+04
TOTAL                               1.726E+06

NEUTRONS/MTIHM
==============
ALPHA,N NEUTRONS                    1.397E+07
SPONTANEOUS FISSION NEUTRONS        7.816E+08
TOTAL NEUTRONS                      7.956E+08

PHOTONS per Second/MTIHM
========================
TOTAL PHOTONS/SEC                   8.372E+15

*Some of the above values were obtained by interpolating TOTALS values from
ORIGEN2 runs to the specific burnup/enrichment/decay time combination you
specified.
```

STONE & WEBSTER ENGINEERING CORPORATION

5010.64

CALCULATION SHEET

CLIENT & PROJECT	PAGE 1 OF 91
PRIVATE FUEL STORAGE, LLC – PFSF	+ 18 pp of ATTACHMENTS
CALCULATION TITLE **STABILITY ANALYSIS OF CASK STORAGE PADS**	QA CATEGORY (✓) ☑ I NUCLEAR SAFETY RELATED ☐ II ☐ III ☐ (other)

CALCULATION IDENTIFICATION NUMBER				OPTIONAL WORK PACKAGE NO.
JOB ORDER NO.	DISCIPLINE	CURRENT CALC NO	OPTIONAL TASK CODE	
05996.02	**G(B)**	**04**		

APPROVALS - SIGNATURE & DATE			REV. NO. OR NEW CALC NO.	SUPERSEDES CALC NO. OR REV NO.	CONFIRMATION REQUIRED ☑	
PREPARER(S)/DATE(S)	REVIEWER(S)/DATES(S)	INDEPENDENT REVIEWER(S)/DATE(S)			YES	NO
Original Signed By: TESponseller / 2-18-97 PJTrudeau / 2-24-97	Original Signed By: PJTrudeau / 2-24-97 TESponseller / 2-24-97	Original Signed By: NTGeorges / 2-27-97	0		✓	
Original Signed By: TESponseller / 4-30-97 PJTrudeau / 4-30-97	Original Signed By: PJTrudeau / 4-30-97 TESponseller / 4-30-97	Original Signed By: AFBrown / 5-8-97	1	0		✓
Original Signed By: PJTrudeau / 6-20-97	Original Signed By: NTGeorges / 6-20-97	Original Signed By: AFBrown / 6-20-97	2	1		✓
Original Signed By: PJTrudeau / 6-27-97	Original Signed By: LPSingh / 7-1-97	Original Signed By: LPSingh / 7-1-97	3	2		✓
Original Signed By: DLAloysius / 9-3-99 SYBoakye / 9-3-99	Original Signed By: SYBoakye / 9-3-99 DLAloysius / 9-3-99	Original Signed By: TYChang / 9-3-99	4	3	✓	
Original Signed By: PJTrudeau / 1-26-00	Original Signed By: TYC for SYBoakye 1-26-00 Lliu / 1-26-00	Original Signed By: TYChang / 9-3-99	5	4		✓
Original Signed By: PJTrudeau / 6-14-00	Original Signed By: TYChang / 6-14-00	Original Signed By: TYChang / 6-14-00	6	5		✓
SYBoakye / 3-30-01 SYBoakye	TYChang / 3-30-01 Thomas Y. Chang	TYChang / 3-30-01 Thomas Y. Chang	7	6	✓	

DISTRIBUTION

GROUP	NAME & LOCATION	COPY SENT (✓)	GROUP	NAME & LOCATION	COPY SENT (✓)
RECORDS MGT. FILES (OR FIRE FILE IF NONE)	JOB BOOK R4.2G	ORIG			
	FIRE FILE - Denver	☑			
Geotechnical	PJTrudeau - Bos 245/2	☑			

TABLE OF CONTENTS

TABLE OF CONTENTS 2

RECORD OF REVISIONS 4

OBJECTIVE OF CALCULATION 7

ASSUMPTIONS/DATA 7

GEOTECHNICAL PROPERTIES 8

METHOD OF ANALYSIS 9

DESCRIPTION OF LOAD CASES 9

OVERTURNING STABILITY OF THE CASK STORAGE PADS 10

SLIDING STABILITY OF THE CASK STORAGE PADS 11

Sliding Stability of the Pads Constructed On and Within Soil Cement 12

Weights 14

Earthquake Accelerations – PSHA 2,000-Yr Return Period 14

Sliding Stability of the Pads Constructed Directly on Silty Clay/Clayey Silt 16

Active Earth Pressure 17

Dynamic Earth Pressure 17

Weights 19

Earthquake Accelerations – PSHA 2,000-Yr Return Period 19

Cask Earthquake Loadings 19

Foundation Pad Earthquake Loadings 19

Case III: 100% N-S, -100% Vertical, 0% E-W 20

Case IV: 100% N-S, 100% Vertical, 0% E-W Earthquake Forces Act Downward 20

Evaluation of Sliding on Deep Slip Surface Beneath Pads 22

Estimation of Horizontal Displacement using Newmark's Method 22

Maximum Ground Motions 23

Load Cases 24

Ground Motions for Analysis 24

Summary of Horizontal Displacements Calculated Based on Newmark's Method for Worst-case Hypothetical assumption that Cask Storage Pads Are Founded Directly on Cohesionless Soils with $\phi = 0$ and No Soil Cement 27

ALLOWABLE BEARING CAPACITY OF THE CASK STORAGE PADS 29

Bearing Capacity Factors 29

Shape Factors (for $L>B$) 30

Depth Factors (for $\frac{D_f}{B} \leq 1$) 30

Inclination Factors 30

Static Bearing Capacity of the Cask Storage Pads 30

Dynamic Bearing Capacity of the Cask Storage Pads 34

Based on Inertial Forces 34

Based on Maximum Cask Dynamic Forces from the SSI Analysis 50

CONCLUSIONS 76

OVERTURNING STABILITY OF THE CASK STORAGE PADS 76

SLIDING STABILITY OF THE CASK STORAGE PADS 76

ALLOWABLE BEARING CAPACITY OF THE CASK STORAGE PADS 78
Static Bearing Capacity of the Cask Storage Pads 78
Dynamic Bearing Capacity of the Cask Storage Pads 78

REFERENCES: 80

TABLES 82

FIGURES 86

ATTACHMENT A Telcon 6-19-97 SMM to PJT Dynamic Bearing Capacity of Pad 1 page

ATTACHMENT B Pages from Calc 05996.02-G(PO17)-2, Rev. 3 providing maximum cask dynamic loads. 14 pages

ATTACHMENT C Pages from Calc 05996.02-G(B)-05-2 providing basis for undrained strength used for dynamic bearing capacity analyses. 3 pages

RECORD OF REVISIONS

REVISION 0

Original Issue

REVISION 1

Revision 1 was prepared to incorporate the following:

- Revised cask weights and dimensions
- Revised earthquake accelerations
- Determine q_{all} as a function of the coefficient of friction between casks and pad.

REVISION 2

To add determination of dynamic bearing capacity of the pad for the loads and loading cases being analyzed by the pad designer. These include the 2-cask, 4-cask, and 8-cask cases. See Attachment A for background information, as well as bearing pressures for the 2-cask loading.

REVISION 3

The bearing pressures and the horizontal forces due to the design earthquake for the 2-cask case that are described in Attachment A are superseded by those included in Attachment B. Revision 3 also adds the calculation of the dynamic bearing capacity of the pad for the 4-cask and 8-cask cases and revises the cask weight to 356.5 K, which is based on Holtec HI-Storm Overpack with loaded MPC-32 (heaviest assembly weight shown on Table 3.2.1 of HI-Storm TSAR, Report HI-951312 Rev. 1 – p. C3, Calculation 05996.01-G(B)-05, Rev 0).

REVISION 4

Updated section on seismic sliding resistance of pads (pp 11-14F) using revised ground accelerations associated with the 2,000-yr return period design basis ground motion (horizontal = 0.528 g; vertical = 0.533 g) and revised soil parameters (c = 1,220 psf; ϕ = 24.9°, based on direct shear tests that are included in Attachments 7 and 8 of Appendix 2A of the SAR.). The horizontal driving forces used in this analysis (EQhc and EQhp) are based on the higher ground accelerations associated with the deterministic design basis ground motion (0.67g horizontal and 0.69g vertical). These forces were not revised for the lower ground accelerations associated with the 2,000-yr return period design basis ground motion (0.528g horizontal and 0.533g vertical) and, thus, this calculation will require confirmation at a later date.

Added a section on sliding resistance along a deeper slip plane (i.e., on cohesionless soils) beneath the pads.

Updated section on dynamic bearing capacity of pad for 8-cask case (pp 38-46). Inserted pp 46A and 46B. This case was examined because it previously yielded the lowest q_{all}

among the three loading cases (i.e., 2-cask, 4-cask, and 8-cask). The updated section shows a calculation of q_{all} based on revised soil parameters (c and ϕ). Note: this analysis will require confirmation and may be updated using revised vertical soil bearing pressures and horizontal shear forces, based on the lower ground accelerations associated with the 2,000-yr return period design basis ground motion (0.528g horizontal, and 0.533g vertical).

Modified/updated conclusions.

NOTE: SYBoakye prepared/DLAloysius reviewed pp 14 through 14F.

Remaining pages prepared by DLAloysius and reviewed by SYBoakye.

REVISION 5

Major re-write of the calculation.

1. Renumbered pages and figures to make the calculation easier to follow.
2. Incorporated dynamic loads due to revised design basis ground motion (PSHA 2,000-yr return period earthquake), as determined in CEC Calculation 05996.02-G(PO17)-2, Rev 0, and removed "Requires Confirmation".
3. Added overturning analysis.
4. Added analysis of sliding stability of cask storage pads founded on and within soil cement.
5. Revised dynamic bearing capacity analyses to utilize only total-stress strength parameters because these partially saturated soils will not have time to drain fully during the rapid cycling associated with the design basis ground motion. See Calculation 05996.02-G(B)-05-1 (SWEC, 2000a) for additional details.
6. Added reference to foundation profiles through pad emplacement area presented in SAR Figures 2.6-5, Sheets 1 through 14.
7. Changed "Load Combinations" to "Load Cases" and defined these cases to be consistent throughout the various stability analyses included herein. These are the same cases as are used in the stability analyses of the Canister Transfer Building, Calculation 05996.02-G(B)-13-2 (SWEC, 2000b).
8. Revised conclusions to reflect results of these changes.

REVISION 6

1. Added "References" section.
2. Revised shear strength used in the sliding stability analyses of the soil cement/silty clay interface to be the strength measured in the direct shear tests performed on samples obtained from depths of ~5.8 ft in the pad emplacement area. The shear strength equaled that measured for stresses corresponding to the vertical stresses at the bottom of the fully loaded cask storage pads.
3. Removed static and dynamic bearing capacity analyses based on total-stress strengths and added dynamic bearing capacity analyses based on c_u = 2.2 ksf..

Revised method of calculating the inclination factor in the bearing capacity analyses to that presented by Vesic in Chapter 3 of Winterkorn and Fang (1975). Vesic's method expands upon the theory developed by Hansen for plane strain analyses of footings with inclined loads. Vesic's method permits a more rigorous analysis of inclined loads acting in two directions on rectangular footings, which more closely represents the conditions applicable for the cask storage pads.

REVISION 7

1. Updated stability analyses to reflect revised design basis ground motions (a_H = 0.711g & a_V = 0.695g, per Table 1 of Geomatrix, 2001).
2. Resisting moment in overturning stability analysis calculated based on resultant of static and dynamic vertical forces.
3. Added analysis of sliding of an entire row of pads supported on at least 1' of soil cement, using an adhesion factor of 0.5 for the interface between the soil cement and the underlying silty clay layer..
4. Added discussion of strength limitations of the soil cement under the cask storage pads to comply with the maximum modulus of elasticity requirements of the materials supporting the pad in the hypothetical cask tipover analysis.
5. Changed pad length to 67 ft and pad embedment to 3 ft, in accordance with design change identified in Figure 4.2-7, "Cask Storage Pads," of SAR Revision 21.
6. Added definition of "m" used in the inclination factors for calculating allowable bearing capacity.
7. Updated references to supporting calculations.
8. Updated discussions and conclusions to incorporate revised results.

OBJECTIVE OF CALCULATION

Evaluate the static & seismic stability of the cask storage pad foundations at the proposed site, including overturning, sliding, and bearing capacity for static loads & for dynamic loads due to the design basis ground motion (PSHA 2,000-yr return period earthquake).

ASSUMPTIONS/DATA

The arrangement of the cask storage pads is shown on SWEC Drawing 0599601-EY-2-B. The spacing of the pads is such that each N-S row of pads may be treated as one long strip footing with B/L ~ 0 & B=30 ft for the bearing capacity analyses.

The E-W spacing of the pads is great enough that adjacent pads will not significantly impact the bearing capacity of one another, as shown on Figure 1, "Foundation Plan & Profile."

The generalized soil profile, presented in Figure 1, indicates the soil profile consists of ~30 ft of silty clay/clayey silt with some sandy silt (Layer 1), overlying ~30 ft of very dense fine sand (Layer 2), overlying extremely dense silt (N ≥100 blows/ft, Layer 3). SAR Figures 2.6-5 (Sheets 1 through 14) present foundation profiles showing the relationship of the cask storage pads with respect to the underlying soils. These profiles, located as shown in SAR Figure 2.6-19, provide more detailed stratigraphic information, especially within the upper ~30-ft thick layer at the site.

Figure 1 also illustrates the coordinate system used in these analyses. Note, the X-direction is N-S, the Y-direction is vertical, and the Z-direction is E-W. This is the same coordinate system that is used in the stability analyses of the Canister Transfer Building (Calculation 05996.02-G(B)-13-2, SWEC, 2000b).

The bearing capacity analyses assume that Layer 1, which consists of silty clay/clayey silt with some sandy silt, is of infinite thickness and has strength properties based on those measured at depths of ~10 ft for the clayey soils within the upper layer. These assumptions simplify the analyses and they are very conservative. With respect to bearing capacity, the strength of the sandy silt in the upper layer is greater than that of the clayey soils, based on the increases in Standard Penetration Test (SPT) blow counts (N-values) and the increased tip resistance (see SAR Figures 2.6-5) in the cone penetration testing (ConeTec, 1999) noted in these soils. The underlying soils are even stronger, based on their SPT N-values, which generally exceed 100 blows/ft.

Based on probabilistic seismic hazard analysis, the peak acceleration levels of 0.711g for horizontal ground motion and 0.695g for the vertical ground motion were determined as the design bases of the PFSF for a 2,000-yr return period earthquake (Geomatrix Consultants, Inc, 2001).

GEOTECHNICAL PROPERTIES

Based on laboratory test results presented in Table 2 of Calculation 05996.02-G(B)-05-2 (SWEC, 2000a),

γ_{moist} = 80 pcf for the soils underlying the pad emplacement area.

The bearing capacity of the structures are dependant primarily on the strength of the soils in the upper ~25 to ~30-ft layer at the site. All of the borings drilled at the site indicate that the soils underlying this upper layer are very dense fine sands overlying silts with standard penetration test blow counts that exceed 100 blows/ft. The results of the cone penetration testing, presented in ConeTec(1999) and plotted in SAR Figure 2.6-5, Sheets 1 to 14, illustrate that the strength of the soils in the upper layer are much greater at depths below ~10 ft than in the range of ~5 ft to ~10 ft, where most of the triaxial tests were performed.

In practice, the average shear strength along the anticipated slip surface of the failure mode should be used in the bearing capacity analysis. This slip surface is normally confined to within a depth below the footing equal to the minimum width of the footing. In this case, the effective width of the footing is decreased because of the large eccentricity of the load on the pads due to the seismic loading. As indicated in Table 2.6-7, the minimum effective width occurs for Load Case IIIB, where B' = 10.1 ft. Figure 7 illustrates that the anticipated slip surface of the bearing capacity failure would be limited to the soils within the upper two-thirds of the upper layer. Therefore, in the bearing capacity analyses presented herein, the undrained strength measured in the UU triaxial tests was not increased to reflect the increase in strength observed for the deeper-lying soils in the cone penetration testing.

Table 6 of Calc 05996.02-G(B)-05-2 (copy included in Attachment C) summarizes the results of the triaxial tests that were performed within depths of ~10 ft. The undrained shear strengths measured in these tests are plotted vs confining pressure in Figure 11 of Calc 05996.02-G(B)-05-2 (copy included in Attachment C). This figure is annotated to indicate the vertical stresses existing prior to construction and following completion of construction.

The undrained shear strengths measured in the triaxial tests are used for the dynamic bearing capacity analyses because the soils are partially saturated and they will not drain completely during the rapid cycling of loadings associated with the design basis ground motion. As indicated in Figure 11 of Calc 05996.02-G(B)-05-2 (copy included in Attachment C), the undrained strength of the soils within ~10 ft of grade is assumed to be 2.2 ksf. This value is the lowest strength measured in the UU tests, which were performed at confining stresses of 1.3 ksf. This confining stress corresponds to the in situ vertical stress existing near the middle of the upper layer, prior to construction of these structures. It is much less than the final stresses that will exist under the cask storage pads and the Canister Transfer Building following completion of construction. Figure 11 of Calc 05996.02-G(B)-05-2 (copy included in Attachment C) illustrates that the undrained strength of these soils increase as the loadings of the structures are applied; therefore, 2.2

ksf is a very conservative value for use in the dynamic bearing capacity analyses of these structures.

Direct shear tests were performed on undisturbed specimens of the silty clay/clayey silt obtained at a depth of 5.7 ft to 6 ft in Boring C-2. These tests were performed at normal stresses that were essentially equal to the normal stresses expected:

1. under the fully loaded pads before the earthquake,
2. with all of the vertical forces due to the earthquake acting upward, and
3. with all of the vertical forces due to the earthquake acting downward.

The results of these tests are presented in Attachment 7 of the Appendix 2A of the SAR and they are plotted in Figure 7 of Calc 05996.02-G(B)-05-2 (copy included in Attachment C). Because of the fine grained nature of these soils, they will not drain completely during the rapid cycling of loadings associated with the design basis ground motion. Therefore, sliding stability analyses included below of the cask storage pads constructed directly on the silty clay are performed using the shear strength measured in these direct shear tests for a normal stress equal to the vertical stress under the fully loaded cask storage pads prior to imposition of the dynamic loading due to the earthquake. As shown in Figure 7 of Calc 05996.02-G(B)-05-2 (copy included in Attachment C), this shear strength is 2.1 ksf and the friction angle is set equal to 0°.

Effective-stress strength parameters are estimated to be c = 0 ksf, even though these soils may be somewhat cemented, and ϕ = 30°. This value of ϕ is based on the PI values for these soils, which ranged between 5% and 23% (SWEC, 2000a), and the relationship between ϕ and PI presented in Figure 18.1 of Terzaghi & Peck (1967).

Therefore, static bearing capacity analyses are performed using the following soil strengths:

Case IA Static using undrained strength: ϕ = 0° & c = 2.2 ksf.

Case IB Static using effective-stress strength: ϕ = 30° & c = 0.

The pads will be constructed on and within soil cement, as illustrated in SAR Figure 4.2-7 and described in SAR Sections 2.6.1.7 and 2.6.4.11. The unit weight of the soil cement is assumed to be 100 pcf in the bearing capacity analyses included herein. The strength of the soil cement is conservatively ignored in these bearing capacity analyses.

METHOD OF ANALYSIS

DESCRIPTION OF LOAD CASES

Load cases analyzed consist of combinations of vertical static, vertical dynamic (compression and uplift, Y-direction), and horizontal dynamic (in X and Z-directions) loads.

The following load combinations are analyzed:

Case I Static

Case II Static + dynamic horizontal forces due to the earthquake

Case III Static + dynamic horizontal + vertical uplift forces due to the earthquake

Case IV Static + dynamic horizontal + vertical compression forces due to the earthquake

For Case II, 100% of the dynamic lateral forces in both X and Z directions are combined. For Cases III and IV, the effects of the three components of the design basis ground motion are combined in accordance with procedures described in ASCE (1986) to account for the fact that the maximum response of the three orthogonal components of the earthquake do not occur at the same time. For these cases, 100% of the dynamic loading in one direction is assumed to act at the same time that 40% of the dynamic loading acts in the other two directions. For these cases, the suffix "A" is used to designate 40% in the X direction (N-S, as shown in Figure 1), 100% in the Y direction (vertical), and 40% in the Z direction (E-W). Similarly, the suffix "B" is used to designate 40% in the X direction, 40% in the Y, and 100% in the Z, and the suffix "C" is used to designate 100% in the X direction and 40% in the other two directions. Thus,

Case IIIA	40%	N-S direction,	-100%	Vertical direction,	40%	E-W direction.
Case IIIB	40%	N-S direction,	-40%	Vertical direction,	100%	E-W direction.
Case IIIC	100%	N-S direction,	-40%	Vertical direction,	40%	E-W direction.

The negative sign for the vertical direction in Case III indicates uplift forces due to the earthquake. Case IV is the same as Case III, but the vertical forces due to the earthquake act downward in compression; therefore, the signs on the vertical components are positive.

OVERTURNING STABILITY OF THE CASK STORAGE PADS

The factor of safety against overturning is defined as:

$$FS_{OT} = \Sigma M_{Resisting} + \Sigma M_{Driving}$$

The resisting moment is calculated as the resultant weight of the pad and casks x the distance from one edge of the pad to the center of the pad in the direction of the minimum width. The weight of the pad is calculated as 3 ft x 67 ft x 30 ft x 0.15 kips/ft^3 = 904.5 K, and the weight of 8 casks is 8 x 356.5 K/cask = 2,852 K. The moment arm for the resisting moment equals ½ of 30 ft, or 15 ft. Therefore,

$$\Sigma M_{Resisting} = [\underset{Wp}{904.5\ K} + \underset{Wc}{2{,}852K}] \times \underset{B/2}{15\ ft}\ \underset{(1-a_v)}{(1-0.695)} = 17{,}186\ ft\text{-}K$$

The driving moment includes the moments due to the horizontal inertial force of the pad x ½ the height of the pad and the horizontal force from the casks acting at the top of the pad x the height of the pad. The casks are simply resting on the top of the pads; therefore, this force cannot exceed the friction force acting between the steel bottom of the cask and the top of the concrete storage pad. This friction force was calculated based on the upper-

bound value of the coefficient of friction between the casks and the storage pad (μ = 0.8, as shown in SAR Section 8.2.1.2) x the normal force acting between the casks and the pad. This force is maximum when the vertical inertial force due to the earthquake acts downward. However, when the vertical force from the earthquake acts downward, it acts in the same direction as the weight, tending to stabilize the structure. Therefore, the minimum factor of safety against overturning will occur when the dynamic vertical force acts in the upward direction, tending to unload the pad.

When the vertical inertial force due to the earthquake acts upward, the friction force = 0.8 x (2,852K - 0.695 x 2,852K) = 696 K. This is less than the maximum dynamic cask horizontal driving force of 2,212 K (Table D-1(c) in CEC, 2001). Therefore, the worst-case horizontal force that can occur when the vertical earthquake force acts upward is limited by the upper-bound value of the coefficient of friction between the bottom of the casks and the top of the storage pad, and it equals 696K.

$$\Sigma M_{Driving} = \overset{a_h}{1.5\text{ ft}} \times \overset{Wp}{0.711 \times 904.5\text{ K}} + \overset{EQhc}{3\text{ ft} \times 696\text{ K}} = 3{,}053\text{ ft-K.}$$

$$\Rightarrow FS_{OT} = \frac{17{,}186\text{ ft} - \text{K}}{3{,}053\text{ ft} - \text{K}} = 5.63$$

This is greater than the criterion of 1.1; therefore, the cask storage pads have an adequate factor of safety against overturning due to dynamic loadings from the design basis ground motion.

SLIDING STABILITY OF THE CASK STORAGE PADS

The factor of safety (FS) against sliding is defined as follows:

FS = resisting force ÷ driving force

For this analysis, ignoring passive resistance of the soil (soil cement) adjacent to the pad, the resisting, or tangential force (T), below the base of the pad is defined as follows:

$$T = N \tan \phi + c\,B\,L$$

where, N (normal force) = $\Sigma F_v = W_c + W_p + EQ_{vc} + EQ_{vp}$

ϕ = 0° (for Silty Clay/Clayey Silt)

c = 2.1 ksf, as indicated on p C-2.

B = 30 feet

L = 67 feet

SLIDING STABILITY OF THE PADS CONSTRUCTED ON AND WITHIN SOIL CEMENT

Objective:

Determine the minimum required strength of the soil cement along the sides of the pads and below the pads to provide a factor of safety against sliding of the cask storage pads of 1.1.

Method/Assumptions:

1. In determining the required strength of soil cement along the sides of the pad, assume that the resistance to sliding is provided only by the passive resistance of the soil-cement layer above the bottom of the pads, ignoring the contribution of the frictional portion of the strength.
2. Ignore the passive resistance of the overlying compacted aggregate, since it is only 1' thick (Figure 3).
3. Assume the active thrust of the compacted aggregate is less than the passive thrust and, thus, the active thrust can be ignored.
4. Use Eq 23.8a of Lambe & Whitman (1969) to calculate passive thrust, P_p, as follows:

$$P_p = \tfrac{1}{2}\gamma_w H^2 + \tfrac{1}{2}\gamma_b H^2 N_\phi + q_s H N_\phi + 2\bar{c} H \sqrt{N_\phi}$$

where:

H	=	height of soil cement above bottom of pad
N_ϕ	=	K_p, coefficient of passive pressure, = 1 assuming $\phi = 0$.
q_s	=	uniform surcharge, = $(\gamma \times H)_{\text{compacted aggregate}}$, > 0.125 kcf x 0.71 ft = 0.09 ksf
$\bar{c}$	=	effective cohesion

5. An adhesion factor (α) of 0.5 is conservatively assumed to determine resistance to sliding at the interface between the soil cement and the underlying silty clay.

Analysis:

Figure 3 presents an elevation view of the minimum thickness of soil cement in the vicinity of the cask storage pads. Figure 4 illustrates the passive pressures acting on the pads.

To obtain FS = 1.1, the total resisting force, T, must =

$$1.1 \times \left[3' \times 30' \times 67' \times 0.15 \frac{K}{ft^3} + 8 \text{ casks} \times 356.5 \frac{K}{\text{cask}} \right] \times 0.711$$

$$\therefore \quad T = 2{,}938 \text{ K}$$

Assuming this resisting force is provided <u>only</u> by the passive resistance provided by the 2-ft thick layer of soil cement adjacent to the pads, as shown in Figures 3 & 4, the minimum required strength of the soil cement is calculated as follows. Note, ignore buoyancy, since the depth to the water table is ~124.5 ft below grade, as measured in Observation Well CTB-5 OW.

$$P_P = \frac{1}{2} \gamma H^2 N_\phi + q_s H N_\phi + 2\bar{c} H \sqrt{N_\phi} \qquad \text{EQ 23.8a of Lambe \& Whitman (1969}$$

where $q_s = (\gamma \cdot H)_{\text{compacted aggregate}} = 0.125 \frac{K}{ft^3} \times \frac{8.5 \text{ in.}}{12 \text{ in./ft}} = 0.09 \text{ ksf/LF}$, which is negligible.

Conservatively assuming $\phi = 0°$ for soil cement, $N_\phi = K_P = 1.0$.

Assuming sliding resistance is provided only by the passive resistance of the soil cement, the minimum resistance will exist for sliding in the N-S direction, because the width in the east-west direction (B=30') is less than the length in the north-south direction (L=67').

Find the minimum cohesion required to provide FS = 1.1.

$$P_P \text{ must be} \geq 2{,}938K = \frac{1}{2} \cdot \underbrace{0.100 \frac{K}{ft^3}}_{\gamma} \times \underbrace{(2 \text{ ft})^2}_{H^2} \times \underbrace{1.0}_{K_P} + 2\bar{c} \cdot \underbrace{2 \text{ ft}}_{H} \cdot \underbrace{\sqrt{1.0}}_{\sqrt{N_\phi}}$$

$$\frac{2{,}938 \text{ K}}{30 \text{ ft}} = 0.2 \frac{K}{ft} + 4\bar{c} = 97.93 \frac{K}{LF} \quad \Rightarrow \quad 4\bar{c} = 97.93 \frac{K}{LF}$$

$$\therefore \quad \bar{c} \geq 24.48 \text{ ksf} \times \left(\frac{ft}{12 \text{ in.}} \right)^2 \times \frac{1{,}000 \#}{K} = 170 \text{ psi}$$

The unconfined compressive strength equals twice the cohesion, or 340 psi. Soil cement with strengths higher than this are readily achievable, as illustrated by the lowest curve in Figure 4.2 of ACI 230.1R-90, which applies for fine-grained soils similar to the eolian silt in the pad emplacement area. Note, f_c = 40C where C = percent cement in the soil cement. Therefore, to obtain f_c >340 psi, the percentage of cement required would be ~340/40 =

8.5%. This is even less cement than would typically be used in constructing soil cement for use as road base, and it would be even lower if shear resistance acting on the base of the pad was included or if K_p was calculated for $\phi > 0°$. Note, Tables 5 & 6 of Nussbaum & Colley (1971) indicate ϕ exceeds 40° for all A-4 soils (CL & ML) treated with cement. Therefore, soil cement will greatly improve the sliding stability of the cask storage pads.

As indicated in Figure 3, the soil cement will extend at least 1 ft below all of the cask storage pads, and, as shown in SAR Figure's 2.6-5, Pad Emplacement Area Foundation Profiles, it will typically extend ~2 ft below most of the pads. Thus, the area available to resist sliding will greatly exceed that of the pads alone. The hypothetical cask tipover analysis imposes limitations on the modulus of elasticity of the soils underlying the pad. The modulus of elasticity of the soil cement is directly related to its strength; therefore, its strength must be limited to values that will satisfy the modulus requirement, but it must still provide an adequate factor of safety with respect to sliding of the pads embedded within the soil cement.

The following analysis calculates the minimum strength required to preclude sliding of an entire row of pads along the base of the soil cement.

WEIGHTS

Casks: Wc = 8 x 356.5 K/cask = 2,852 K

Pad: Wp = 3 ft x 67 ft x 30 ft x 0.15 kips/ft^3 = 904.5 K

EARTHQUAKE ACCELERATIONS – PSHA 2,000-YR RETURN PERIOD

a_H = horizontal earthquake acceleration = 0.711g

a_V = vertical earthquake acceleration = 0.695g

Consider a row of 10 pads with 2' of soil cement in between the pads and at least 1' of soil cement under the pads:

Weight of Casks	= 10 x 2,852 K	= 28,520 K
Weight of Pads	= 10 x 904.5 K	= 9,045 K
Weight of Soil Cement	= 9 x 3 ft x 30 ft x 5 ft x .10 kips/ft^3	= 405 K
	Total	= 37,970 K

To obtain FS = 1.1, the total resisting force, T, must =

1.1 x (Weight of Casks + Weight of Pads + Weight of Soil Cement) x 0.711

= 1.1 x (28,520 K + 9,045 K + 405 K) x 0.711

Therefore, T = 29,696 K

Base Area, A, of a row of 10 pads is given by

A = 10 x 30 ft x 67 ft + 9 x 30 ft x 5 ft = 21,450 ft²

Therefore the minimum cohesion required to provide the resisting force T is given by

T = cohesion ($\bar{c}$) x adhesion factor (α) x area (A)

T = $\bar{c}$ x 0.5 x 21,450 ft²

$\bar{c}$ x 0.5 x 21,450 ft² = 29,696 K

$\bar{c}$ = 2.77 ksf = 20 psi

The unconfined compressive strength equals twice the cohesion, or 40 psi.

Table 5-6 of Bowles (1996) indicates E = 1,500 s_u, where s_u = the undrained shear strength. Note, s_u is half of q_u, the unconfined compressive strength.

Based on this relationship, E = 750 q_u,

Where E = Young's modulus

q_u = Unconfined compressive strength

An unconfined compressive strength of 100 psi for the soil cement under the pad will limit the modulus value to 75,000 psi. Thus, designing the soil cement to have an unconfined compressive strength that ranges from 40 psi to 100 psi will provide an adequate factor of safety against sliding and will limit the modulus of the soil cement under the pads to an acceptable level for the hypothetical cask tipover considerations.

The soil cement will have higher shear strength than the underlying silty clay/clayey silt layer; therefore, the resistance to sliding on that interface will be limited by the shear strength of the silty clay/clayey silt. Direct shear tests on samples of the soils from the pad emplacement area indicate the shear strength available to resist sliding from loads due to the design basis ground motion is 2.1 ksf as shown in Figure 7 of Calc 05996.02-G(B)-5-2 (copy included in Attachment C).

The following pages illustrate that there is an adequate factor or safety against sliding of the pads, postulating that they are constructed directly on the silty clay/clayey silt and neglecting the passive resistance provided by the soil cement that will be surrounding the pads. The factor of safety against sliding along the soil cement/silty clay interface will be much greater than this, because the shearing resistance will be available over the areas between the pads, as well as under the pads, and additional passive resistance will be provided by the continuous soil cement layer existing below the pads.

SLIDING STABILITY OF THE PADS CONSTRUCTED DIRECTLY ON SILTY CLAY/CLAYEY SILT

Material around the pad will be soil cement. In this analysis, the passive resistance provided by the soil cement is ignored to demonstrate that there is an acceptable factor of safety against sliding of the pads if they were founded directly on the silty clay/clayey silt. The soil cement is assumed to have the same properties that were used in Rev 4 of this calculation to model the crushed stone (compacted aggregate) that was originally proposed adjacent to the pads. These include:

γ = 125 pcf — Because of the low density of the eolian silts that will be used to construct the soil cement, it is likely that γ will be less than this value. It is conservative to use this higher value, because it is used in this analysis only for determining upper-bound estimates of the active earth pressure acting on the pad due to the design basis ground motion.

ϕ = 40° — Tables 5 & 6 of Nussbaum & Colley (1971) indicate that ϕ exceeds 40° for all A-4 soils (CL & ML, similar to the eolian silts at the site) treated with cement; therefore, it is likely that ϕ will be higher than this value. This value is not used, however, in this analysis for calculating sliding resistance. It also is used in this analysis only for determining upper-bound estimates of the active earth pressure acting on the pad due to the design basis ground motion.

H = 3 ft — As shown in SAR Figure 4.2-7, the pad is 3 ft thick, and it is constructed such that top of the pad is at the final ground surface (i.e., pads are embedded 3' below grade).

For frictional materials, the resistance to sliding is lower when the forces due to the earthquake act upward; therefore, analyze the sliding stability for Load Case III, which has the dynamic forces due to the earthquake acting upward. To increase the conservatism of this analysis, assume 100% of the dynamic forces due to the earthquake act in both the N-S and Vertical directions at the same time. The length of the pad in the N-S direction (67 ft) is greater than twice the width in the E-W direction (30 ft); therefore, estimate the driving forces due to dynamic active earth pressures acting on the length of the pad, tending to cause sliding to occur in the E-W direction.

ACTIVE EARTH PRESSURE

$P_a = 0.5\ \gamma\ H^2\ K_a$

$K_a = (1 - \sin\phi)/(1 + \sin\phi) = 0.22$ for $\phi = 40°$ for the soil cement.

P_a = [0.5 x 125 pcf x (3 ft)^2 x 0.22] x 67 ft (length)/storage pad = 8,291 lbs.

DYNAMIC EARTH PRESSURE

As indicated on p 11 of GTG 6.15-1 (SWEC, 1982), for active conditions, the combined static and dynamic lateral earth pressure coefficient is computed according to the analysis developed by Mononobe-Okabe and described in Seed and Whitman (1970) as:

$$K_{AE} = \frac{(1 - \alpha_V) \cdot \cos^2(\phi - \theta - \alpha)}{\cos\theta \cdot \cos^2\alpha \cdot \cos(\delta + \alpha + \theta) \cdot \left[1 + \sqrt{\frac{\sin(\phi + \delta) \cdot \sin(\phi - \theta - \beta)}{\cos(\delta + \alpha + \theta) \cdot \cos(\beta - \alpha)}}\right]^2}$$

where :

$\theta = \tan^{-1}\left(\frac{\alpha_H}{\alpha_V}\right)$

β = slope of ground behind wall,

α = slope of back of wall to vertical,

α_H = horizontal seismic coefficient, where a positive value corresponds to a horizontal inertial force directed toward the wall,

α_V = vertical seismic coefficient, where a positive value corresponds to a vertical inertial force directed upward,

δ = angle of wall friction,

ϕ = friction angle of the soil,

g = acceleration due to gravity.

The combined static and dynamic active earth pressure force, P_{AE}, is calculated as:

$P_{AE} = \frac{1}{2}\gamma H^2 K_{AE}$, where :

γ = unit weight of soil,

H = wall height, and

K_{AE} is calculated as shown above.

$\beta = \alpha = 0$

$$\theta = \tan^{-1} \times \left(\frac{0.711}{1 - 0.695} \right) = 66.8^\circ$$

$\phi = 40^\circ$

Approximating $\sin(\phi - \theta) \approx 0$ and $\cos(\phi - \theta) \approx 1$

$$K_{AE} = \frac{1 - \alpha_V}{\cos\theta \cdot \cos(\delta + \theta)}$$

$$\delta = \frac{\phi}{2} = 20^\circ$$

$$\therefore \quad K_{AE} = \frac{1 - 0.695}{\cos 66.8^\circ \cdot \cos(20^\circ + 66.8^\circ)} = 13.87$$

Therefore, the combined static and dynamic active lateral earth pressure force is:

$$F_{AE\,E\text{-}W} = P_{AE} = \frac{1}{2} \times \underbrace{125 \text{ pcf}}_{\gamma} \times \underbrace{(3 \text{ ft})^2}_{H^2} \times \underbrace{13.87}_{K_{AE}} \times \underbrace{67 \text{ ft}}_{L} \text{ / storage pad} = 522.7 \text{ K in E - W direction.}$$

$$F_{AE\,N\text{-}S} = 522.7 \text{ K} \times \frac{30 \text{ ft}}{67 \text{ ft}} = 234.1 \text{ K in the N - S direction.}$$

WEIGHTS

Casks: Wc = 8 x 356.5 K/cask = 2,852 K

Pad: Wp = 3 ft x 67 ft x 30 ft x 0.15 kips/ft^3 = 904.5 K

EARTHQUAKE ACCELERATIONS – PSHA 2,000-YR RETURN PERIOD

a_H = horizontal earthquake acceleration = 0.711g

a_V = vertical earthquake acceleration = 0.695g

CASK EARTHQUAKE LOADINGS

EQvc = -0.695 x 2,852 K = -1,982 K (minus sign signifies uplift force)

$EQhc_x$ = 2,212 K (acting short direction of pad, E-W) $Q_{xd\ max}$ in Table D-1(c) in Att B

$EQhc_y$ = 2,102 K (acting in long direction of pad, N-S) $Q_{yd\ max}$ in Table D-1(c) "

Note: These maximum horizontal dynamic cask driving forces are from Calc 05996.02-G(PO17)-2, (CEC, 2001), and they apply only when the dynamic forces due to the earthquake act downward and the coefficient of friction between the cask and the pad equals 0.8. For frictional materials, sliding is critical when the foundation is unloaded due to uplift forces from the earthquake. Therefore, $EQh_{c\ max}$ is limited to a maximum value of 696 K for Case III, based on the upper-bound value of μ = 0.8, as shown in the following table:

Cask Loads	WT K	EQ_{vc} K	N K	0.2 x N K	0.8 x N K	$EQ_{hc\ max}$ K
Case III – Uplift	2,852	-1,982	870	174	696	**696**
Case IV - EQ_v Down	2,852	1,982	4,834	967	3,867	**2,212** E-W 2,102 N-S

Note:

Case III: 100% N-S, -100% Vertical, 0% E-W Earthquake Forces Act Upward

Case IV: 100% N-S, 100% Vertical, 0% E-W Earthquake Forces Act Downward

FOUNDATION PAD EARTHQUAKE LOADINGS

EQvp = -0.695 x 904.5 K = -629 K

EQhp = 0.711 x 904.5 K = 643 K

CASE III: 100% N-S, -100% VERTICAL, 0% E-W

When EQvc and EQvp act in an upward direction (Case III), tending to unload the pad, sliding resistance is obtained as follows:

$$N = \overset{Wc}{2{,}852\ K} + \overset{Wp}{904.5\ K} + \overset{EQvc}{(-1{,}982\ K)} + \overset{EQvp}{(-629\ K)} = 1{,}146\ K$$

$$T = \overset{N}{1{,}146\ K} \times \overset{\phi}{\tan 0°} + \overset{c}{2.1\ ksf} \times \overset{B}{30\ ft} \times \overset{L}{67\ ft} = 4{,}221\ K$$

The driving force, V, is defined as:

$$V = F_{AE} + EQhp + EQhc$$

The factor of safety against sliding is calculated as follows:

$$FS = \overset{T}{4{,}221\ K} \div (\overset{F_{AE}}{522.7\ K} + \overset{EQhp}{643\ K} + \overset{EQhc}{696\ K}) = 2.27$$

For this analysis, the value of EQhc was limited to the upper-bound value of the coefficient of friction, $\mu = 0.8$, x the cask normal load, because if Qxd exceeds this value, the cask would slide. The factor of safety exceeds the minimum allowable value of 1.1; therefore the pads are stable with respect to sliding for this load case. The factor of safety against sliding is higher than this if the lower-bound value of μ is used (= 0.2), because the driving forces due to the casks would be reduced.

CASE IV: 100% N-S, 100% VERTICAL, 0% E-W EARTHQUAKE FORCES ACT DOWNWARD

When the earthquake forces act in the downward direction:

$$T = N \tan \phi + [c\ B\ L]$$

where, N (normal force) = Σ Fv = Wc + Wp + EQvc + EQvp

$$N = \overset{Wc}{2{,}852\ K} + \overset{Wp}{904.5\ K} + \overset{EQvc}{1{,}982\ K} + \overset{EQvp}{629\ K} = 6{,}368\ K$$

$$T = \overset{N}{6{,}368\ K} \times \overset{\phi}{\tan 0°} + \overset{c}{2.1\ ksf} \times \overset{B}{30\ ft} \times \overset{L}{67\ ft} = 4{,}221\ K$$

The driving force, V, is defined as:

$$V = F_{AE} + EQhp + EQhc$$

The factor of safety against sliding is calculated as follows:

$$FS = \overset{T}{4{,}221\ K} \div (\overset{F_{AE}}{522.7\ K} + \overset{EQhp}{643\ K} + \overset{EQhc}{2{,}212\ K}) = 1.25$$

For this analysis, the larger value of EQhc (i.e., acting in the short direction of the pad) was used, because it produces a lower and, thus, more conservative factor of safety. The factor of safety exceeds the minimum allowable value of 1.1; therefore the pads are stable with respect to sliding for this load case. The factor of safety against sliding is higher than this if the lower-bound value of μ is used (= 0.2), because the driving forces due to the casks would be reduced.

These analyses illustrate that if the cask storage pads were constructed directly on the silty clay/clayey silt layer, they would have an adequate factor of safety against sliding due to loads from the design basis ground motion. Because the soil cement is continuous between the pads, its interface with the silty clay will be much larger than that provided by the footprint of the pads and used in the analyses presented in this section. The soil cement will be mixed and compacted into the surface of the silty clay, providing a bond at the interface that will exceed the strength of the silty clay. Therefore, this interface will have more resistance to sliding than is included in these analyses and, thus, there will be adequate resistance at this interface to preclude sliding of the pads due to the loads from the design basis ground motion.

EVALUATION OF SLIDING ON DEEP SLIP SURFACE BENEATH PADS

Adequate factors of safety against sliding due to maximum forces from the design basis ground motion have been obtained for the storage pads founded directly on the silty clay/clayey silt layer, conservatively ignoring the presence of the soil cement that will surround the pads. The shearing resistance is provided by the undrained shear strength of the silty clay/clayey silt layer, which is not affected by upward earthquake loads. As shown in SAR Figures 2.6-5, Pad Emplacement Area – Foundation Profiles, a layer, composed in part of sandy silt, underlies the clayey layer at a depth of about 10 ft below the cask storage pads. Sandy silts oftentimes are cohesionless; therefore, to be conservative, this portion of the sliding stability analysis assumes that the soils in this layer are cohesionless, ignoring the effects of cementation that were observed on many of the split-spoon and thin-walled tube samples obtained in the drilling programs.

The shearing resistance of cohesionless soils is directly related to the normal stress. Earthquake motions resulting in upward forces reduce the normal stress and, consequently, the shearing resistance, for purely cohesionless (frictional) soils. Factors of safety against sliding in such soils are low if the maximum components of the design basis ground motion are combined. The effects of such motions are evaluated by estimating the displacements the structure will undergo when the factor of safety against sliding is less than 1 to demonstrate that the displacements are sufficiently small that, should they occur, they will not adversely impact the performance of the pads.

The method proposed by Newmark (1965) is used to estimate the displacement of the pads, assuming they are founded directly on a layer of cohesionless soils. This simplification produces an upper-bound estimate of the displacement that the pads might see if a cohesionless layer was continuous beneath the pads. For motion to occur on a slip surface along the top of a cohesionless layer at a depth of 10 ft below the pads, the slip surface would have to pass through the overlying clayey layer, which, as shown above, is strong enough to resist sliding due to the earthquake forces. In this analysis, a friction angle of 30° is used to define the strength of the soils to conservatively model a loose cohesionless layer. The soils in the layer in question have a much higher friction angle, generally greater than 35°, as indicated in the plots of "Phi" interpreted from the cone penetration testing, which are presented in Appendix D of ConeTec (1999).

ESTIMATION OF HORIZONTAL DISPLACEMENT USING NEWMARK'S METHOD

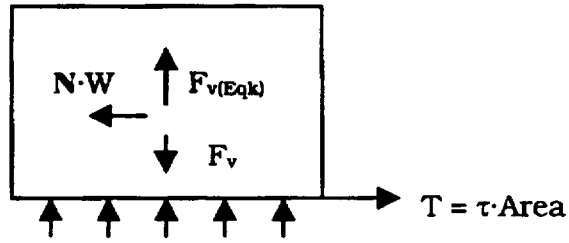

Newmark (1965) defines "N·W" as the steady force applied at the center of gravity of the sliding mass in the direction which the force can have its lowest value to just overcome the stabilizing forces and keep the mass moving. Note, Newmark defines "N" as the "Maximum Resistance Coefficient," and it is an acceleration coefficient in this case, not the normal force.

For a block sliding on a horizontal surface, $N \cdot W = T$,

where T is the shearing resistance of the block on the sliding surface.

Shearing resistance, $T = \tau \cdot \text{Area}$

where $\tau = \sigma_n \tan \phi$

$\sigma_n =$ Normal Stress

$\phi =$ Friction angle of cohesionless layer

$\sigma_n =$ Net Vertical Force/Area

$= (F_v - F_{v\,Eqk})/\text{Area}$

$T = (F_v - F_{v\,Eqk}) \tan \phi$

$N\,W = T$

$\Rightarrow \quad N = [(F_v - F_{v\,Eqk}) \tan \phi] / W$

The maximum relative displacement of the pad relative to the ground, u_m, is calculated as

$$u_m = [V^2 (1 - N/A)] / (2gN)$$

The above expression for the relative displacement is an upper bound for all of the data points for N/A less than 0.15 and greater than 0.5, as shown in Figure 5 , which is a copy of Figure 41 of Newmark (1965). Within the range of 0.5 to 0.15, the following expression gives an upper bound of the maximum relative displacement for all data.

$$u_m = V^2 /(2gN)$$

MAXIMUM GROUND MOTIONS

The maximum ground accelerations used to estimate displacements of the cask storage pads were those due to the PSHA 2,000-yr return period earthquake; i.e., $a_H = 0.711g$ and $a_V = 0.695g$. The maximum horizontal ground velocities required as input in Newmark's method of analysis of displacements due to earthquakes were estimated for the cask storage pads assuming that the ratio of the maximum ground velocity to the maximum ground acceleration equaled 48 (i.e., 48 in./sec per g). Thus, the estimated maximum velocities applicable for the Newmark's analysis of displacements of the cask storage pads = 0.711 x 48 = 34.1 in./sec. Since the peak ground accelerations are the same in both horizontal directions, the velocities are the same as well.

LOAD CASES

The resistance to sliding on cohesionless materials is lowest when the dynamic forces due to the design basis ground motion act in the upward direction, which reduces the normal forces and, hence, the shearing resistance, at the base of the foundations. Thus, the following analyses are performed for Load Cases IIIA, IIIB, and IIIC, in which the pads are unloaded due to uplift from the earthquake forces.

Case IIIA 40% N-S direction, -100% Vertical direction, 40% E-W direction.

Case IIIB 40% N-S direction, -40% Vertical direction, 100% E-W direction.

Case IIIC 100% N-S direction, -40% Vertical direction, 40% E-W direction.

GROUND MOTIONS FOR ANALYSIS

Load Case	North-South		Vertical	East-West	
	Accel g	Velocity in./sec	Accel g	Accel g	Velocity in./sec
IIIA	0.284g	13.7	0.695g	0.284g	13.7
IIIB	0.284g	13.7	0.278g	0.711g	34.1
IIIC	0.711g	34.1	0.278g	0.284g	13.7

Load Case IIIA: 40% N-S direction, -100% Vertical direction, 40% E-W direction.

Static Vertical Force, F_v = W = Weight of casks and pad = 2,852 K + 904.5 K = 3,757 K

Earthquake Vertical Force, $F_{v\,Eqk} = a_v \times W/g$ = 0.695g x 3,757 K/g = 2,611 K

$\phi = 30°$

For Case IIIA, 100% of vertical earthquake force is applied upward and, thus, must be subtracted to obtain the normal force; thus, Newmark's maximum resistance coefficient is

$$N = [(\underbrace{3{,}757}_{F_v} - \underbrace{2{,}611}_{F_{v\,Eqk}}) \underbrace{\tan 30°}_{\phi}] \,/\, \underbrace{3{,}757}_{W} = 0.176$$

Resultant acceleration in horizontal direction, $A = \sqrt{(\overset{40\%\ N\text{-}S}{0.284^2} + \overset{40\%\ E\text{-}W}{0.284^2})} = 0.402g$

Resultant velocity in horizontal direction, $V = \sqrt{(\overset{40\%\ N\text{-}S}{13.7^2} + \overset{40\%\ E\text{-}W}{13.7^2})} = 19.4$ in./sec

$$\Rightarrow \quad N / A = 0.176 / 0.402 = 0.438$$

The maximum displacement of the pad relative to the ground, u_m, calculated based on Newmark (1965) is

$$u_m = [V^2 (1 - N/A)] / (2gN)$$

where g is in units of inches/sec².

$$\Rightarrow \quad u_m = \left(\frac{(19.4 \text{ in./sec})^2 \cdot (1 - 0.438)}{2 \cdot 386.4 \text{ in./sec}^2 \cdot 0.176} \right) = 1.56''$$

The above expression for the relative displacement is an upper bound for all the data points for N /A less than 0.15 and greater than 0.5, as shown in Figure 5. For N/A values between 0.15 and 0.5 the data in Figure 5 is bounded by the expression

$$u_m = [V^2] / (2gN)$$

$$\Rightarrow \quad u_m = \left(\frac{(19.4 \text{ in./sec})^2}{2 \cdot 386.4 \text{ in./sec}^2 \cdot 0.176} \right) = 2.77''$$

In this case, N /A is = 0.438; therefore, use the average of the maximum displacements; i.e., 0.5 (1.56 + 2.77) = 2.2" . Thus the maximum displacement is ~2.2 inches.

Load Case IIIB: 40% N-S direction, -40% Vertical direction, 100% E-W direction.

Static Vertical Force, F_v = W = 3,757 K

Earthquake Vertical Force, $F_{v(Eqk)}$ = 2,611 K x 0.40 = 1,044 K

ϕ = 30°

$$N = [(\underbrace{3{,}757}_{F_v} - \underbrace{1{,}044}_{F_{v\,Eqk}}) \underbrace{\tan 30°}_{\phi}] / \underbrace{3{,}757}_{W} = 0.417$$

Resultant acceleration in horizontal direction, $A = \sqrt{(\overset{40\%\ N\text{-}S}{0.284^2} + \overset{100\%\ E\text{-}W}{0.711^2})}\, g = 0.766g$

Resultant velocity in horizontal direction, $V = \sqrt{(\overset{40\%\ N\text{-}S}{13.7^2} + \overset{100\%\ E\text{-}W}{34.1^2})} =$ 36.7 in./sec

$$\Rightarrow \quad N / A = 0.417 / 0.766 = 0.544$$

The maximum displacement of the pad relative to the ground, u_m, calculated based on Newmark (1965) is

$$u_m = [V^2 (1 - N/A)] / (2g N)$$

$$\Rightarrow \quad u_m = \left(\frac{(36.7 \text{ in./sec})^2 \cdot (1 - 0.544)}{2 \cdot 386.4 \text{ in./sec}^2 \cdot 0.417} \right) = 1.91''$$

The above expression for the relative displacement is an upper bound for all the data points for N /A less than 0.15 and greater than 0.5, as shown in Figure 5. In this case, N /A is > 0.5; therefore, this equation is applicable for calculating the maximum relative displacement. Thus the maximum displacement is ~1.9 inches.

Load Case IIIC: 100% N-S direction, -40% Vertical direction, 40% E-W direction.

Since the horizontal accelerations and velocities are the same in the orthogonal directions, the result for Case IIIC is the same as those for Case IIIB.

SUMMARY OF HORIZONTAL DISPLACEMENTS CALCULATED BASED ON NEWMARK'S METHOD FOR WORST-CASE HYPOTHETICAL ASSUMPTION THAT CASK STORAGE PADS ARE FOUNDED DIRECTLY ON COHESIONLESS SOILS WITH ϕ = 0 AND NO SOIL CEMENT

LOAD COMBINATION				DISPLACEMENT
Case IIIA	40% N-S	-100% Vert	40% E-W	2.2 inches
Case IIIB	40% N-S	-40% Vert	100% E-W	1.9 inches
Case IIIC	100% N-S	-40% Vert	40% E-W	1.9 inches

Assuming the cask storage pads are founded directly on a layer of cohesionless soils with ϕ = 30°, the estimated relative displacement of the pads due to the design basis ground motion based on Newmark's method of estimating displacements of embankments and dams due to earthquakes ranges from ~1.9 inches to 2.2 inches. Because there are no connections between the pads or between the pads and other structures, displacements of this magnitude, were they to occur, would not adversely impact the performance of the cask storage pads. There are several conservative assumptions that were made in determining these values and, therefore, the estimated displacements represent upper-bound values.

The soils in the layer that are assumed to be cohesionless, the one ~10 ft below the pads that is labeled "Clayey Silt/Silt & Some Sandy Silt" in the foundation profiles in the pad emplacement area (SAR Figures 2.6-5, Sheets 1 through 14), are clayey silts and silts, with some sandy silt. To be conservative in this analysis, these soils are assumed to have a friction angle of 30°. However, the results of the cone penetration testing (ConeTec, 1999) indicate that these soils have ϕ values that generally exceed 35 to 40°, as shown in Appendices D & F of ConeTec (1999). These high friction angles likely are the manifestation of cementation that was observed in many of the specimens obtained in split-barrel sampling and in the undisturbed tubes that were obtained for testing in the laboratory. Possible cementation of these soils is also ignored in this analysis, adding to the conservatism.

In addition, this analysis postulates that cohesionless soils exist directly at the base of the pads. In reality, the surface of these soils is 10 ft or more below the pads, and it is not likely to be continuous, as the soils in this layer are intermixed. For the pads to slide, a surface of sliding must be established between the horizontal surface of the "cohesionless" layer at a depth of at least 10 ft below the pads, through the overlying clayey layer, and daylighting at grade. As shown in the analysis preceding this section, the overlying clayey layer is strong enough to resist sliding due to the earthquake forces: The contribution of

the shear strength of the soils along this failure plane rising from the horizontal surface of the "cohesionless" layer at a depth of at least 10 ft to the resistance to sliding is ignored in the simplified model used to estimate the relative displacement, further adding to the conservatism.

These analyses also conservatively ignore the presence of the soil cement under and adjacent to the cask storage pads. As shown above, this soil cement can easily be designed to provide all of the sliding resistance necessary to provide an adequate factor of safety, considering only the passive resistance acting on the sides of the pads, without relying on friction or cohesion along the base of the pads. Adding friction and cohesion along the base of the pads will increase the factor of safety against sliding.

ALLOWABLE BEARING CAPACITY OF THE CASK STORAGE PADS

The bearing capacity for shallow foundations is determined using the general bearing capacity equation and associated factors, as referenced in Winterkorn and Fang (1975). The general bearing capacity equation is a modification of Terzaghi's bearing capacity equation, which was developed for strip footings and indicates that $q_{ult} = c \cdot N_c + q \cdot N_q + \frac{1}{2}\gamma \cdot B \cdot N_\gamma$. The ultimate bearing capacity of soil consists of three components: 1) cohesion, 2) surcharge, and 3) friction, which are represented by the bearing capacity factors N_c, N_q, and N_γ. Terzaghi's bearing capacity equation has been enhanced by various investigators to incorporate shape, depth, and load inclination factors for different foundation geometries and loads as follows:

$$q_{ult} = c\, N_c\, s_c\, d_c\, i_c + q\, N_q\, s_q\, d_q\, i_q + \tfrac{1}{2}\, \gamma\, B\, N_\gamma\, s_\gamma\, d_\gamma\, i_\gamma$$

where

q_{ult} = ultimate bearing capacity

c = cohesion or undrained strength

q = effective surcharge at bottom of foundation, $= \gamma D_f$

γ = unit weight of soil

B = foundation width

s_c, s_q, s_γ = shape factors, which are a function of foundation width to length

d_c, d_q, d_γ = depth factors, which account for embedment effects

i_c, i_q, i_γ = load inclination factors

N_c, N_q, N_γ = bearing capacity factors, which are a function of ϕ.

γ in the third term is the unit weight of soil below the foundation, whereas the unit weight of the soil above the bottom of the footing is used in determining q in the second term.

BEARING CAPACITY FACTORS

Bearing capacity factors are computed based on relationships proposed by Vesic (1973), which are presented in Chapter 3 of Winterkorn and Fang (1975). The shape, depth and load inclination factors are calculated as follows:

$$N_q = e^{\pi \tan\phi} \tan^2\left(45 + \frac{\phi}{2}\right)$$

$$N_c = (N_q - 1)\ \cot\phi\text{, but} = 5.14 \text{ for } \phi = 0.$$

$$N_\gamma = 2\ (N_q + 1)\ \tan\phi$$

SHAPE FACTORS (FOR *L>B*)

$$s_c = 1 + \frac{B}{L} \cdot \frac{N_q}{N_c}$$

$$s_q = 1 + \frac{B}{L} \tan\phi$$

$$s_\gamma = 1 - 0.4\frac{B}{L}$$

DEPTH FACTORS (FOR $\frac{D_f}{B} \le 1$)

$$d_c = d_q - \frac{(1-d_q)}{N_q \cdot \tan\phi} \text{ for } \phi > 0 \text{ and } d_c = 1 + 0.4\left(\frac{D_f}{B}\right) \text{ for } \phi = 0.$$

$$d_q = 1 + 2\tan\phi \cdot (1-\sin\phi)^2 \cdot \left(\frac{D_f}{B}\right)$$

$$d_\gamma = 1$$

INCLINATION FACTORS

$$i_q = \left(1 - \frac{F_H}{F_V + B'L'c\cot\phi}\right)^m$$

$$i_c = i_q - \frac{(1-i_q)}{N_c \cdot \tan\phi} \text{ for } \phi > 0 \text{ and } i_c = 1 - \left(\frac{m F_H}{B'L'c N_c}\right) \text{ for } \phi = 0$$

$$i_\gamma = \left(1 - \frac{F_H}{F_V + B'L'c\cot\phi}\right)^{m+1}$$

Where: F_H and F_V are the total horizontal and vertical forces acting on the footing and

$m_B = (2 + B/L) / (1 + B/L)$

$m_L = (2 + L/B) / (1 + L/B)$

STATIC BEARING CAPACITY OF THE CASK STORAGE PADS

The following pages present the details of the bearing capacity analyses for the static load cases. These cases are identified as follows:

Case IA Static using undrained strength parameters (ϕ = 0° & c = 2.2 ksf).

Case IB Static using effective-stress strength parameters (ϕ = 30° & c = 0).

Allowable Bearing Capacity of Cask Storage Pads

Static Analysis: Case IA - Static

Soil Properties:

c =	**2,200**	Cohesion (psf)	
ϕ =	**0.0**	Friction Angle (degrees)	
γ =	**80**	Unit weight of soil (pcf)	
γ_{surch} =	**100**	Unit weight of surcharge (pcf)	

Foundation Properties:

B' =	**30.0**	Footing Width - ft (E-W)	L' = **67.0** Length - ft (N-S)
D_f =	**3.0**	Depth of Footing (ft)	
β =	**0.0**	Angle of load inclination from vertical (deg)	**0** $g = a_H$
FS =	**3.0**	Factor of Safety required for $q_{allowable}$	**0** $g = a_V$

$F_{V\ Static}$ = **3,757** k & EQ_V = **0** k → **3,757** k for F_V

$EQ_{H\ E\text{-}W}$ = **0** k & $EQ_{H\ N\text{-}S}$ = **0** k → **0** k for F_H

$q_{ult} = c\, N_c\, s_c\, d_c\, i_c + \gamma_{surch}\, D_f\, N_q\, s_q\, d_q\, i_q + 1/2\, \gamma\, B\, N_\gamma\, s_\gamma\, d_\gamma\, i_\gamma$

General Bearing Capacity Equation, based on Winterkorn & Fang (1975)

$N_c = (N_q - 1)\cot(\phi)$, but = 5.14 for $\phi = 0$	=	5.14	Eq 3.6 & Table 3.2
$N_q = e^{\pi \tan\phi} \tan^2(\pi/4 + \phi/2)$	=	1.00	Eq 3.6
$N_\gamma = 2(N_q + 1)\tan(\phi)$	=	0.00	Eq 3.8
$s_c = 1 + (B/L)(N_q/N_c)$	=	1.09	Table 3.2
$s_q = 1 + (B/L)\tan\phi$	=	1.00	"
$s_\gamma = 1 - 0.4\,(B/L)$	=	0.82	"
For $D_f/B \leq 1$: $d_q = 1 + 2\tan\phi\,(1 - \sin\phi)^2\, D_f/B$	=	1.00	Eq 3.26
$d_\gamma = 1$	=	1.00	"
For $\phi > 0$: $d_c = d_q - (1 - d_q)/(N_q \tan\phi)$	=	N/A	
For $\phi = 0$: $d_c = 1 + 0.4\,(D_f/B)$	=	1.04	Eq 3.27

No inclined loads; therefore, $i_c = i_q = i_\gamma = 1.0$.

			N_c term		N_q term		N_γ term
Gross q_{ult} =	**13,085**	**psf =**	**12,785**	+	**300**	+	**0**

q_{all} = 4,360 psf = q_{ult} / FS

q_{actual} = 1,869 psf = ($F_{V\ Static}$ + EQ_V) / (B' x L')

FS_{actual} = 7.00 = q_{ult} / q_{actual} > 3 Hence OK

Allowable Bearing Capacity of Cask Storage Pads

Static Analysis: Case IB - Static

Soil Properties:	c =	0	Cohesion (psf)	
Effective Stress Strengths	ϕ =	30.0	Friction Angle (degrees)	
	γ =	80	Unit weight of soil (pcf)	
	γ_{surch} =	100	Unit weight of surcharge (pcf)	
Foundation Properties:	B' =	30.0	Footing Width - ft (E-W)	L' = 67.0 Length - ft (N-S)
	D_f =	3.0	Depth of Footing (ft)	
	β =	0.0	Angle of load inclination from vertical (deg)	0 g = a_H
	FS =	3.0	Factor of Safety required for $q_{allowable}$	0 g = a_V

$F_{V\ Static}$ = 3,757 k & EQ_V = 0 k → 3,757 k for F_V

$EQ_{H\ E\text{-}W}$ = 0 k & $EQ_{H\ N\text{-}S}$ = 0 k → 0 k for F_H

$q_{ult} = c\, N_c\, s_c\, d_c\, i_c + \gamma_{surch}\, D_f\, N_q\, s_q\, d_q\, i_q + 1/2\, \gamma\, B\, N_\gamma\, s_\gamma\, d_\gamma\, i_\gamma$ **General Bearing Capacity Equation, based on Winterkorn & Fang (1975)**

$N_c = (N_q - 1)\cot(\phi)$, but = 5.14 for $\phi = 0$	=	30.14	Eq 3.6 & Table 3.2
$N_q = e^{\pi \tan\phi} \tan^2(\pi/4 + \phi/2)$	=	18.40	Eq 3.6
$N_\gamma = 2(N_q + 1)\tan(\phi)$	=	22.40	Eq 3.8
$s_c = 1 + (B/L)(N_q/N_c)$	=	1.27	Table 3.2
$s_q = 1 + (B/L)\tan\phi$	=	1.26	"
$s_\gamma = 1 - 0.4\,(B/L)$	=	0.82	"
For $D_f/B \le 1$: $d_q = 1 + 2\tan\phi\,(1 - \sin\phi)^2\, D_f/B$	=	1.03	Eq 3.26
$d_\gamma = 1$	=	1.00	"
For $\phi > 0$: $d_c = d_q - (1 - d_q)/(N_q \tan\phi)$	=	1.03	
For $\phi = 0$: $d_c = 1 + 0.4\,(D_f/B)$	=	N/A	Eq 3.27

No inclined loads; therefore, $i_c = i_q = i_\gamma = 1.0$.

			N_c term		N_q term		N_γ term
Gross q_{ult} =	29,216	psf =	0	+	7,148	+	22,068
q_{all} =	9,730	psf = q_{ult} / FS					
q_{actual} =	1,869	psf = $(F_{v\ Static} + EQ_v)/(B' \times L')$					
FS_{actual} =	15.63	= q_{ult}/q_{actual}			> 3		Hence OK

Table 2.6-6 presents a summary of the results of the bearing capacity analyses for the static load cases. As indicated in this table, the gross allowable bearing pressure for the cask storage pads to obtain a factor of safety of 3.0 against a shear failure from static loads is greater than 4 ksf. However, loading the storage pads to this value may result in undesirable settlements. This minimum allowable value was obtained in analyses that conservatively assume $\phi = 0°$ and $c = 2.2$ ksf, as measured in the UU tests that are reported in Attachment 2 of Appendix 2A of the SAR, to model the end of construction. Using the estimated effective-stress strength of $\phi = 30°$ and $c = 0$ results in higher allowable bearing pressures. As shown in Table 2.6-6, the gross allowable bearing capacities of the cask storage pads for static loads for this soil strength is greater than 9 ksf.

DYNAMIC BEARING CAPACITY OF THE CASK STORAGE PADS

Dynamic bearing capacity analyses are performed using two different sets of dynamic forces. In the first set of analyses, which are presented on Pages 35 to 48, the dynamic loads are determined as the inertial forces applicable for the peak ground accelerations from the design basis ground motion. The second set of analyses use the maximum dynamic cask driving forces developed for use in the design of the pads in Calculation 05996.02-G(PO17)-2 (CEC, 2001), for the pad supporting 2 casks, 4 casks, and 8 casks.

BASED ON INERTIAL FORCES

This section presents the analysis of the allowable bearing capacity of the pad for supporting the dynamic loads defined as the inertial forces applicable for the peak ground accelerations from the design basis ground motion. The total vertical force includes the static weight of the pad and eight fully loaded casks ± the vertical inertial forces due to the earthquake. The vertical inertial force is calculated as a_V x [weight of the pad + cask dead loads], multiplied by the appropriate factor (±40% or ±100%) for the load case. In these analyses, the minus sign for the percent loading in the vertical direction signifies uplift forces, which tend to unload the pad. Similarly, the horizontal inertial forces are calculated as a_H x [weight of the pad + cask dead loads], multiplied by the appropriate factor (40% or 100%) for the load case. The horizontal inertial force from the casks was confirmed to be less than the maximum force that can be transmitted from the cask to the pad through friction for each of these load cases. This friction force was calculated based on the upper-bound value of the coefficient of friction between the casks and the storage pad considered in the HI-STORM cask stability analysis (μ = 0.8, as shown in SAR Section 8.2.1.2, Accident Analysis) x the normal force acting between the casks and the pad.

The lower-bound friction case (discussed in SAR Section 4.2.3.5.1B), wherein μ between the steel bottom of the cask and the top of the concrete storage pad = 0.2, results in lower horizontal forces being applied at the top of the pad. This decreases the inclination of the load applied to the pad, which results in increased bearing capacity. Therefore, the dynamic bearing capacity analyses are not performed for μ = 0.2.

Table 2.6-7 presents the results of the bearing capacity analyses for the following cases, which include static loads plus inertial forces due to the earthquake. Because the *in situ* fine-grained soils are not expected to fully drain during the rapid cycling of load during the earthquake, these cases are analyzed using the undrained strength that was measured in unconsolidated-undrained triaxial tests (ϕ = 0° and c = 2.2 ksf).

Case II	100%	N-S direction,	0%	Vertical direction,	100%	E-W direction.
Case IIIA	40%	N-S direction,	-100%	Vertical direction,	40%	E-W direction.
Case IIIB	40%	N-S direction,	-40%	Vertical direction,	100%	E-W direction.
Case IIIC	100%	N-S direction,	-40%	Vertical direction,	40%	E-W direction.
Case IVA	40%	N-S direction,	100%	Vertical direction,	40%	E-W direction.
Case IVB	40%	N-S direction,	40%	Vertical direction,	100%	E-W direction.
Case IVC	100%	N-S direction,	40%	Vertical direction,	40%	E-W direction

Case II: 100% N-S, 0% Vertical, 100% E-W

Determine forces and moments due to earthquake.

$$F_v = \overset{Wc}{2{,}852\ K} + \overset{Wp}{904.5\ K} = 3{,}757\ K \text{ and } EQ_v = 0 \text{ for this case.}$$

$$EQ_{H\ Pad} = \overset{a_H}{0.711} \times \overset{HT_{pad}}{3'} \times \overset{B}{30'} \times \overset{L}{67'} \times \overset{\gamma_{conc}}{0.15\ kcf} = 643\ K$$

$$EQhc = \text{Minimum of } [\underset{2{,}028\ K}{\overset{a_H}{0.711} \times \overset{Wc}{2{,}852\ K}}\ \&\ \underset{2{,}282K}{\overset{\mu}{0.8} \times \overset{Nc}{2{,}852\ K}}] \quad \Rightarrow \quad EQhc = 2{,}028\ K$$

Note, Nc = Wc in this case, since $a_V = 0$.

$$EQ_{H\ N\text{-}S} = \overset{EQhp}{643\ K} + \overset{EQhc}{2{,}028\ K} = 2{,}671\ K$$

The horizontal components are the same for this case; therefore, $EQ_{H\ E\text{-}W} = EQ_{H\ N\text{-}S}$

Combine these horizontal components to calculate F_H:

$$\Rightarrow \quad F_H = \sqrt{EQ^2{}_{H\ E\text{-}W} + EQ^2{}_{H\ N\text{-}S}} = \sqrt{2{,}671^2 + 2{,}671^2} = 3{,}777\ K$$

Determine moments acting on pad due to casks.

See Figure 6 for identification of Δb.

$$\Delta b = \frac{9.83' \times EQhc}{Wc + EQvc} = \frac{9.83' \times 2{,}028\ K}{2{,}852\ K + 0} = 6.99\ ft$$

$$\Sigma M_{\bullet N\text{-}S} = \overset{a_H}{1.5'} \times \overset{Wp}{0.711 \times 904.5\ K} + \overset{EQhc}{3' \times 2{,}028\ K} + \overset{\Delta b}{6.99'} \times (\overset{Wc}{2{,}852K} + \overset{EQvc}{0})$$

$$= 965\ ft\text{-}K + 6{,}084\ ft\text{-}K + 19{,}935\ ft\text{-}K = 26{,}984\ ft\text{-}K$$

The horizontal forces are the same N-S and E-W for this case; therefore,

$$\Sigma M_{\bullet E\text{-}W} = \Sigma M_{\bullet N\text{-}S} = 26{,}984\ ft\text{-}K$$

See Table 2.6-7 for definition and calculation of B', L', and β for these forces and moments.

Determine $q_{allowable}$ for FS = 1.1.

DYNAMIC BEARING CAPACITY OF THE CASK STORAGE PADS BASED ON INERTIAL FORCES

Allowable Bearing Capacity of Cask Storage Pads

PSHA 2,000-Yr Earthquake: Case II

Based on Inertial Forces Combined:
100 % N-S, 0 % Vert, 100 % E-W

Soil Properties:

$c =$	**2,200**	Cohesion (psf)	
$\phi =$	**0.0**	Friction Angle (degrees)	
$\gamma =$	**80**	Unit weight of soil (pcf)	
$\gamma_{surch} =$	**100**	Unit weight of surcharge (pcf)	

Foundation Properties:

$B' =$	**15.6**	Footing Width - ft (E-W)	$L' =$ **52.6** Length - ft (N-S)
$D_f =$	**3.0**	Depth of Footing (ft)	
$FS =$	**1.1**	Factor of Safety required for $q_{allowable}$.	**0.711** $g = a_H$
			0.695 $g = a_V$

$F_V =$ **3,757** k & $EQ_V =$ **0** k → **3,757** k for F_V

$EQ_{H\,E\text{-}W} =$ **2,671** k & $EQ_{H\,N\text{-}S} =$ **2,671** k → **3,777** k for F_H

$q_{ult} = c\,N_c\,s_c\,d_c\,i_c + \gamma_{surch}\,D_f\,N_q\,s_q\,d_q\,i_q + 1/2\,\gamma\,B\,N_\gamma\,s_\gamma\,d_\gamma\,i_\gamma$

General Bearing Capacity Equation, based on Winterkorn & Fang (1975)

$N_c = (N_q - 1)\cot(\phi)$, but $= 5.14$ for $\phi = 0$	=	5.14	Eq 3.6 & Table 3.2
$N_q = e^{\pi \tan\phi} \tan^2(\pi/4 + \phi/2)$	=	1.00	Eq 3.6
$N_\gamma = 2\,(N_q + 1)\tan(\phi)$	=	0.00	Eq 3.8
$s_c = 1 + (B/L)(N_q/N_c)$	=	1.06	Table 3.2
$s_q = 1 + (B/L)\tan\phi$	=	1.00	"
$s_\gamma = 1 - 0.4\,(B/L)$	=	0.88	"
For $D_f/B \le 1$: $d_q = 1 + 2\tan\phi\,(1 - \sin\phi)^2\,D_f/B$	=	1.00	Eq 3.26
$d_\gamma = 1$	=	1.00	"
For $\phi > 0$: $d_c = d_q - (1 - d_q)/(N_q \tan\phi)$	=	N/A	
For $\phi = 0$: $d_c = 1 + 0.4\,(D_f/B)$	=	1.08	Eq 3.27
$m_B = (2 + B/L)/(1 + B/L)$	=	1.69	Eq 3.18a
$m_L = (2 + L/B)/(1 + L/B)$	=	1.31	Eq 3.18b
If $EQ_{H\,N\text{-}S} > 0$: $\theta_n = \tan^{-1}(EQ_{H\,E\text{-}W}/EQ_{H\,N\text{-}S})$	=	0.79 rad	
$m_n = m_L \cos^2\theta_n + m_B \sin^2\theta_n$	=	1.50	Eq 3.18c
$i_q = \{1 - F_H/[(F_v + EQ_v) + B'\,L'\,c\cot\phi]\}^m$	=	1.00	Eq 3.14a
$i_\gamma = \{1 - F_H/[(F_v + EQ_v) + B'\,L'\,c\cot\phi]\}^{m+1}$	=	0.00	Eq 3.17a
For $\phi = 0$: $i_c = 1 - (m\,F_H/B'\,L'\,c\,N_c)$	=	0.39	Eq 3.16a

			N_c term		N_q term		N_γ term
Gross q_{ult} =	**5,338**	**psf =**	**5,038**	**+**	**300**	**+**	**0**
q_{all} =	**4,850**	**psf = q_{ult} / FS**					
q_{actual} =	**4,565**	**psf = $(F_v + EQ_v)/(B' \times L')$**					
FS_{actual} =	**1.17**	**= q_{ult} / q_{actual}**					**> 1.1 Hence OK**

Case IIIA: 40% N-S, -100% Vertical, 40% E-W

Determine forces and moments due to earthquake.

$$EQ_V = \overset{a_V}{-100\%} \times \overset{W_p}{0.695} \times (\overset{W_c}{904.5\ K} + 2{,}852\ K) = -2{,}611\ K$$

$$EQhp = \overset{a_H}{0.711} \times \overset{W_c}{904.5\ K} = 643\ K$$

Normal force at base of the cask = Cask DL = 2,852 K

— Cask $EQvc = -1. \times 0.695 \times 2{,}852\ K = -1{,}982\ K = a_V \times W_c$

$\Rightarrow$ Nc = 870 K

$\Rightarrow$ $F_{EQ\ \mu=0.8} = 0.8 \times 870\ K = 696\ K$

$$EQhc = \text{Minimum of } [\underset{2{,}028\ K}{\overset{a_H}{0.711} \times \overset{W_c}{2{,}852\ K}}\ \&\ \underset{696\ K}{\overset{\mu}{0.8} \times \overset{N_c}{870\ K}}]$$

Note: Use only 40% of the horizontal earthquake forces in this case. 40% of 2,028 K = 811 K, which is > 696 K (= $F_{EQ\ \mu=0.8}$); therefore, EQhc is limited to the friction force at the base of the casks, which = 696 K in both the N-S and E-W directions for this case.

$$\Rightarrow \quad EQ_{H\ N\text{-}S} = \overset{40\%\ of\ EQhp}{0.4 \times 643\ K} + \overset{EQhc_{N\text{-}S}}{696\ K} = 953\ K$$

Since horizontal components are the same for this case, $EQ_{H\ E\text{-}W} = EQ_{H\ N\text{-}S}$

$$\Rightarrow \quad F_H = \sqrt{EQ^2_{H\ E\text{-}W} + EQ^2_{H\ N\text{-}S}} = \sqrt{953^2 + 953^2} = 1{,}348\ K$$

Determine moments acting on pad due to casks. Conservatively assume EQhc is not limited to $F_{EQ\ \mu=0.8}$ in determining the moment due to the casks acting on the pad.

See Figure 6 for identification of Δb. Note: $EQvc = -1. \times 0.695 \times 2{,}852\ K = -1{,}982\ K$

$$\Delta b_{E\text{-}W} = \frac{9.83' \times EQhc}{Wc + EQvc} = \frac{9.83' \times 0.4 \times 2{,}028\ K}{2{,}852\ K - 1{,}982\ K} = 9.16\ ft$$

$$\Sigma M_{\circledcirc N\text{-}S} = \overset{40\%\ a_H}{1.5' \times 0.4 \times 0.711} \times \overset{W_p}{904.5\ K} + \overset{Eqhc}{3' \times 0.4 \times 2{,}028\ K} + \overset{\Delta b}{9.16'} \times (\overset{W_c}{2{,}852K} - \overset{EQvc}{1{,}982\ K})$$

$$= 386\ ft\text{-}K + 2{,}433\ ft\text{-}K + 7{,}969\ ft\text{-}K = 10{,}788\ ft\text{-}K$$

The horizontal forces are the same N-S and E-W for this case; therefore,

$$\Sigma M_{\circledcirc E\text{-}W} = \Sigma M_{\circledcirc N\text{-}S} = 10{,}788\ ft\text{-}K$$

Determine $q_{allowable}$ for FS = 1.1.

STONE & WEBSTER ENGINEERING CORPORATION

5010.65

CALCULATION SHEET

CALCULATION IDENTIFICATION NUMBER				PAGE 38
J.O. OR W.O. NO.	DIVISION & GROUP	CALCULATION NO.	OPTIONAL TASK CODE	
05996.02	G(B)	04 - 7		

DYNAMIC BEARING CAPACITY OF THE CASK STORAGE PADS BASED ON INERTIAL FORCES

Allowable Bearing Capacity of Cask Storage Pads

PSHA 2,000-Yr Earthquake: Case IIIA

Based on Inertial Forces Combined:
40 % N-S, -100 % Vert, 40 % E-W

Soil Properties:

c =	**2,200**	Cohesion (psf)	
ϕ =	**0.0**	Friction Angle (degrees)	
γ =	**80**	Unit weight of soil (pcf)	
γ_{surch} =	**100**	Unit weight of surcharge (pcf)	

Foundation Properties:

B' =	**11.2**	Footing Width - ft (E-W)	L' = **48.2** Length - ft (N-S)
D_f =	**3.0**	Depth of Footing (ft)	
FS =	**1.1**	Factor of Safety required for $q_{allowable}$.	**0.711** $g = a_H$
			0.695 $g = a_V$

F_V = **3,757** k & EQ_V = **-2,611** k → **1,146** k for F_V

$EQ_{H\,E\text{-}W}$ = **953** k & $EQ_{H\,N\text{-}S}$ = **953** k → **1,348** k for F_H

$q_{ult} = c\,N_c\,s_c\,d_c\,i_c + \gamma_{surch}\,D_f\,N_q\,s_q\,d_q\,i_q + 1/2\,\gamma\,B\,N_\gamma\,s_\gamma\,d_\gamma\,i_\gamma$

General Bearing Capacity Equation, based on Winterkorn & Fang (1975)

$N_c = (N_q - 1)\cot(\phi)$, but = 5.14 for $\phi = 0$	=	5.14	Eq 3.6 & Table 3.2
$N_q = e^{\pi \tan\phi} \tan^2(\pi/4 + \phi/2)$	=	1.00	Eq 3.6
$N_\gamma = 2\,(N_q + 1)\tan(\phi)$	=	0.00	Eq 3.8
$s_c = 1 + (B/L)(N_q/N_c)$	=	1.05	Table 3.2
$s_q = 1 + (B/L)\tan\phi$	=	1.00	"
$s_\gamma = 1 - 0.4\,(B/L)$	=	1.00	"
For $D_f/B \le 1$: $d_q = 1 + 2\tan\phi\,(1 - \sin\phi)^2\,D_f/B$	=	1.00	Eq 3.26
$d_\gamma = 1$	=	1.00	"
For $\phi > 0$: $d_c = d_q - (1-d_q)/(N_q \tan\phi)$	=	N/A	
For $\phi = 0$: $d_c = 1 + 0.4\,(D_f/B)$	=	1.11	Eq 3.27
$m_B = (2 + B/L)/(1 + B/L)$	=	1.69	Eq 3.18a
$m_L = (2 + L/B)/(1 + L/B)$	=	1.31	Eq 3.18b
If $EQ_{H\,N\text{-}S} > 0$: $\theta_n = \tan^{-1}(EQ_{H\,E\text{-}W}/EQ_{H\,N\text{-}S})$	=	0.79 rad	
$m_n = m_L \cos^2\theta_n + m_B \sin^2\theta_n$	=	1.50	Eq 3.18c
$i_q = \{1 - F_H/[(F_v + EQ_v) + B'\,L'\,c\cot\phi]\}^m$	=	1.00	Eq 3.14a
$i_\gamma = \{1 - F_H/[(F_v + EQ_v) + B'\,L'\,c\cot\phi]\}^{m+1}$	=	0.00	Eq 3.17a
For $\phi = 0$: $i_c = 1 - (m\,F_H/B'\,L'\,c\,N_c)$	=	0.67	Eq 3.16a

			N_c term		N_q term		N_γ term
Gross q_{ult} =	9,034	psf =	8,734	+	300	+	0

q_{all} =	8,210	psf = q_{ult} / FS
q_{actual} =	2,132	psf = $(F_v + EQ_v)/(B' \times L')$
FS_{actual} =	4.24	= q_{ult}/q_{actual} > 1.1 **Hence OK**

[geot]:05996\calc\brng_cap\Pad\Wint_Fang-7.xls

Case IIIB: 40% N-S, -40% Vertical, 100% E-W

Determine forces and moments due to earthquake.

$$EQ_V = \underbrace{-40\%}_{} \times \underbrace{0.695}_{a_V} \times (\underbrace{904.5\ K}_{Wp} + \underbrace{2{,}852\ K}_{Wc}) = -1{,}044\ K$$

Normal force at base of the cask = Cask DL = 2,852 K

— 40% of Cask $EQvc = -0.4 \times 0.695 \times 2{,}852\ K = -793\ K$ = 40% of $a_V \times Wc$

$\Rightarrow$ Nc = 2,059 K

$\Rightarrow$ $F_{EQ\ \mu=0.8} = 0.8 \times 2{,}059\ K = 1{,}647\ K$

$$EQhc = \text{Min of } [\underbrace{0.711 \times 2{,}852\ K}_{2{,}028\ K}\ \&\ \underbrace{0.8 \times 2{,}059\ K}_{1{,}647K}] \Rightarrow EQhc = 1{,}647\ K;$$

i.e., EQhc is limited to the friction force at the base of the casks in the E-W direction, but it = 0.4 x 2,028 K = 811 K in the N-S direction for this case.

Using 40% of N-S:

$$\Rightarrow EQ_{H\ N\text{-}S} = \underbrace{0.4 \times 643\ K}_{40\%\ of\ EQhp} + \underbrace{811\ K}_{Eqhc_{N\text{-}S}} = 1{,}068\ K$$

Using 100% of E-W:

$$\Rightarrow EQ_{H\ E\text{-}W} = \underbrace{1.0 \times 643\ K}_{100\%\ of\ EQhp} + \underbrace{1{,}647\ K}_{Eqhc_{E\text{-}W}} = 2{,}290\ K$$

$$\Rightarrow F_H = \sqrt{EQ^2{}_{H\ E\text{-}W} + EQ^2{}_{H\ N\text{-}S}} = \sqrt{2{,}290^2 + 1{,}068^2} = 2{,}527\ K$$

Determine moments acting on pad due to casks. Conservatively assume EQhc is not limited to $F_{EQ\ \mu=0.8}$ in determining the moment due to the casks acting on the pad.

See Figure 6 for identification of Δb. Note: $EQvc = -0.4 \times 0.695 \times 2{,}852\ K = -793\ K$

$$\Delta b_{E\text{-}W} = \frac{9.83' \times EQhc_{E\text{-}W}}{Wc + EQvc} = \frac{9.83' \times 2{,}028\,K}{2{,}852\,K - 793\,K} = 9.68\ ft$$

$$\Sigma M_{@N\text{-}S} = \underbrace{1.5'}_{} \times \underbrace{0.711}_{100\%\ a_H} \times \underbrace{904.5\ K}_{Wp} + \underbrace{3'}_{} \times \underbrace{2{,}028\ K}_{Eqhc_{E\text{-}W}} + \underbrace{9.68'}_{\Delta b} \times (\underbrace{2{,}852K}_{Wc} - \underbrace{793\ K}_{EQvc})$$

$$= 965\ ft\text{-}K + 6{,}084\ ft\text{-}K + 19{,}931\ ft\text{-}K = 26{,}980\ ft\text{-}K$$

$$\Delta b_{N\text{-}S} = \frac{9.83' \times EQhc_{N\text{-}S}}{Wc + EQvc} = \frac{9.83' \times 0.4 \times 2{,}028\,K}{2{,}852\,K - 793\,K} = 3.87\ ft$$

$$\Sigma M_{@E\text{-}W} = \underbrace{1.5'}_{} \times \underbrace{0.4 \times 0.711}_{40\%\ a_H} \times \underbrace{904.5\ K}_{Wp} + \underbrace{3'}_{} \times \underbrace{811\ K}_{Eqhc_{N\text{-}S}} + \underbrace{3.87'}_{\Delta b} \times (\underbrace{2{,}852K}_{Wc} - \underbrace{793\ K}_{EQvc})$$

$$= 386\ ft\text{-}K + 2{,}434\ ft\text{-}K + 7{,}969\ ft\text{-}K = 10{,}787\ ft\text{-}K$$

Determine $q_{allowable}$ for FS = 1.1.

Allowable Bearing Capacity of Cask Storage Pads

PSHA 2,000-Yr Earthquake: Case IIIB

Based on Inertial Forces Combined:
40 % N-S, -40 % Vert, 100 % E-W

Soil Properties:

c =	**2,200**	Cohesion (psf)	
ϕ =	**0.0**	Friction Angle (degrees)	
γ =	**80**	Unit weight of soil (pcf)	
γ_{surch} =	**100**	Unit weight of surcharge (pcf)	

Foundation Properties:

B' =	**10.1**	Footing Width - ft (E-W)	L' = **59.0** Length - ft (N-S)
D_f =	**3.0**	Depth of Footing (ft)	**Assume strip footing if L/B > 5**
FS =	**1.1**	Factor of Safety required for $q_{allowable}$.	**0.711** g = a_H
			0.695 g = a_V

F_V = **3,757** k & EQ_V = **-1,044** k → **2,712** k for F_V

$EQ_{H\,E\text{-}W}$ = **2,291** k & $EQ_{H\,N\text{-}S}$ = **1,068** k → **2,527** k for F_H

$q_{ult} = c\,N_c\,s_c\,d_c\,i_c + \gamma_{surch}\,D_f\,N_q\,s_q\,d_q\,i_q + 1/2\,\gamma\,B\,N_\gamma\,s_\gamma\,d_\gamma\,i_\gamma$

General Bearing Capacity Equation, based on Winterkorn & Fang (1975)

$N_c = (N_q - 1)\cot(\phi)$, but = 5.14 for $\phi = 0$		=	5.14	Eq 3.6 & Table 3.2
$N_q = e^{\pi \tan\phi} \tan^2(\pi/4 + \phi/2)$		=	1.00	Eq 3.6
$N_\gamma = 2(N_q + 1)\tan(\phi)$		=	0.00	Eq 3.8
$s_c = 1 + (B/L)(N_q/N_c)$	**Strip**	=	1.00	Table 3.2
$s_q = 1 + (B/L)\tan\phi$	**Strip**	=	1.00	"
$s_\gamma = 1 - 0.4\,(B/L)$	**Strip**	=	1.00	"
For $D_f/B \le 1$: $d_q = 1 + 2\tan\phi\,(1 - \sin\phi)^2\,D_f/B$		=	1.00	Eq 3.26
$d_\gamma = 1$		=	1.00	"
For $\phi > 0$: $d_c = d_q - (1-d_q)/(N_q\tan\phi)$		=	N/A	
For $\phi = 0$: $d_c = 1 + 0.4\,(D_f/B)$		=	1.12	Eq 3.27
$m_B = (2 + B/L)/(1 + B/L)$		=	1.69	Eq 3.18a
$m_L = (2 + L/B)/(1 + L/B)$		=	1.31	Eq 3.18b
If $EQ_{H\,N\text{-}S} > 0$: $\theta_n = \tan^{-1}(EQ_{H\,E\text{-}W}/EQ_{H\,N\text{-}S})$		=	1.13 rad	
$m_n = m_L\cos^2\theta_n + m_B\sin^2\theta_n$		=	1.62	Eq 3.18c
$i_q = \{1 - F_H/[(F_v + EQ_v) + B'L'c\cot\phi]\}^m$		=	1.00	Eq 3.14a
$i_\gamma = \{1 - F_H/[(F_v + EQ_v) + B'L'c\cot\phi]\}^{m+1}$		=	0.00	Eq 3.17a
For $\phi = 0$: $i_c = 1 - (m\,F_H/B'L'c\,N_c)$		=	0.39	Eq 3.16a

			N_c term		N_q term		N_γ term
Gross q_{ult} =	5,260	**psf =**	4,960	+	300	+	0
q_{all} =	4,780	**psf = q_{ult} / FS**					
q_{actual} =	4,547	**psf = $(F_v + EQ_v)/(B' \times L')$**					
FS_{actual} =	1.16	**= q_{ult}/q_{actual}**					**> 1.1 Hence OK**

Case IIIC: 100% N-S, -40% Vertical, 40% E-W

Determine forces and moments due to earthquake.

$$EQ_V = -40\% \times \overset{a_V}{0.695} \times (\overset{W_p}{904.5\text{ K}} + \overset{W_c}{2{,}852\text{ K}}) = -1{,}044\text{ K}$$

Normal force at base of the cask = Cask DL = 2,852 K

— 40% of Cask $EQ_{vc} = -0.4 \times 0.695 \times 2{,}852\text{ K} = -793\text{ K}$ = 40% of $a_V \times W_c$

$\Rightarrow$ $N_c = 2{,}059\text{ K}$

$\Rightarrow$ $F_{EQ\,\mu=0.8} = 0.8 \times 2{,}059\text{ K} = 1{,}647\text{ K}$

$$EQ_{hc} = \text{Min of } [\overset{a_H}{0.711} \times \overset{W_c}{2{,}852\text{ K}} \;\&\; \overset{\mu}{0.8} \times \overset{N_c}{2{,}059\text{ K}}] \Rightarrow EQ_{hc} = 1{,}647\text{ K};$$

$2{,}028$ K $\quad$ $1{,}647$K

i.e., EQ_{hc} is limited to the friction force at the base of the casks in the N-S direction, but it = 0.4 x 2,028 K = 811 K in the E-W direction for this case.

Using 100% of N-S:

$$\Rightarrow \quad EQ_{H\,N\text{-}S} = \overset{100\%\text{ of }EQ_{hp}}{1.0 \times 643\text{ K}} + \overset{Eqhc_{N\text{-}S}}{1{,}647\text{ K}} = 2{,}290\text{ K}$$

Using 40% of E-W:

$$\Rightarrow \quad EQ_{H\,E\text{-}W} = \overset{40\%\text{ of }EQ_{hp}}{0.4 \times 643\text{ K}} + \overset{Eqhc_{E\text{-}W}}{811\text{ K}} = 1{,}068\text{ K}$$

$$\Rightarrow \quad F_H = \sqrt{EQ^2{}_{H\,E\text{-}W} + EQ^2{}_{H\,N\text{-}S}} = \sqrt{1{,}068^2 + 2{,}290^2} = 2{,}527\text{ K}$$

Determine moments acting on pad due to casks. Conservatively assume EQ_{hc} is not limited to $F_{EQ\,\mu=0.8}$ in determining the moment due to the casks acting on the pad.

See Figure 6 for identification of Δb. Note: $EQ_{vc} = -0.4 \times 0.695 \times 2{,}852\text{ K} = -793\text{ K}$

$$\Delta b_{E\text{-}W} = \frac{9.83' \times EQ_{hc_{E\text{-}W}}}{W_c + EQ_{vc}} = \frac{9.83' \times 811\text{K}}{2{,}852\text{K} - 793\text{K}} = 3.87\text{ ft}$$

$$\Sigma M_{\bullet N\text{-}S} = 1.5' \times \overset{40\%\,a_H}{0.4 \times 0.711} \times \overset{W_p}{904.5\text{ K}} + 3' \times \overset{Eqhc_{E\text{-}W}}{811\text{ K}} + \overset{\Delta b}{3.87'} \times (\overset{W_c}{2{,}852\text{K}} - \overset{EQ_{vc}}{793\text{ K}})$$

$$= 386\text{ ft-K} + 2{,}433\text{ ft-K} + 7{,}969\text{ ft-K} = 10{,}788\text{ ft-K}$$

$$\Delta b_{N\text{-}S} = \frac{9.83' \times EQ_{hc_{N\text{-}S}}}{W_c + EQ_{vc}} = \frac{9.83' \times 2{,}028\text{K}}{2{,}852\text{K} - 793\text{K}} = 9.68\text{ ft}$$

$$\Sigma M_{\bullet E\text{-}W} = 1.5' \times \overset{100\%\,a_H}{0.711} \times \overset{W_p}{904.5\text{ K}} + 3' \times \overset{Eqhc_{N\text{-}S}}{2{,}028\text{ K}} + \overset{\Delta b}{9.68'} \times (\overset{W_c}{2{,}852\text{K}} - \overset{EQ_{vc}}{793\text{ K}})$$

$$= 965\text{ ft-K} + 6{,}084\text{ ft-K} + 19{,}931\text{ ft-K} = 26{,}980\text{ ft-K}$$

Determine $q_{allowable}$ for FS = 1.1.

Allowable Bearing Capacity of Cask Storage Pads

PSHA 2,000-Yr Earthquake: Case IIIC

Based on Inertial Forces Combined:
100 % N-S, -40 % Vert, 40 % E-W

Soil Properties:

c =	**2,200**	Cohesion (psf)	
ϕ =	**0.0**	Friction Angle (degrees)	
γ =	**80**	Unit weight of soil (pcf)	
γ_{surch} =	**100**	Unit weight of surcharge (pcf)	

Foundation Properties:

B' =	**22.0**	Footing Width - ft (E-W)	L' = **47.1** Length - ft (N-S)
D_f =	**3.0**	Depth of Footing (ft)	
FS =	**1.1**	Factor of Safety required for $q_{allowable}$.	**0.711** $g = a_H$
			0.695 $g = a_V$

F_V = **3,757** k & EQ_V = **-1,044** k → **2,712** k for F_V

$EQ_{H\,E\text{-}W}$ = **1,068** k & $EQ_{H\,N\text{-}S}$ = **2,291** k → **2,527** k for F_H

$q_{ult} = c\,N_c\,s_c\,d_c\,i_c + \gamma_{surch}\,D_f\,N_q\,s_q\,d_q\,i_q + 1/2\,\gamma\,B\,N_\gamma\,s_\gamma\,d_\gamma\,i_\gamma$

General Bearing Capacity Equation, based on Winterkorn & Fang (1975)

$N_c = (N_q - 1)\cot(\phi)$, but = 5.14 for $\phi = 0$	=	5.14	Eq 3.6 & Table 3.2
$N_q = e^{\pi \tan\phi} \tan^2(\pi/4 + \phi/2)$	=	1.00	Eq 3.6
$N_\gamma = 2\,(N_q + 1)\tan(\phi)$	=	0.00	Eq 3.8
$s_c = 1 + (B/L)(N_q/N_c)$	=	1.09	Table 3.2
$s_q = 1 + (B/L)\tan\phi$	=	1.00	"
$s_\gamma = 1 - 0.4\,(B/L)$	=	0.81	"
For $D_f/B \le 1$: $d_q = 1 + 2\tan\phi\,(1 - \sin\phi)^2\,D_f/B$	=	1.00	Eq 3.26
$d_\gamma = 1$	=	1.00	"
For $\phi > 0$: $d_c = d_q - (1-d_q)/(N_q\tan\phi)$	=	N/A	
For $\phi = 0$: $d_c = 1 + 0.4\,(D_f/B)$	=	1.05	Eq 3.27
$m_B = (2 + B/L)/(1 + B/L)$	=	1.69	Eq 3.18a
$m_L = (2 + L/B)/(1 + L/B)$	=	1.31	Eq 3.18b
If $EQ_{H\,N\text{-}S} > 0$: $\theta_n = \tan^{-1}(EQ_{H\,E\text{-}W}/EQ_{H\,N\text{-}S})$	=	0.44 rad	
$m_n = m_L\cos^2\theta_n + m_B\sin^2\theta_n$	=	1.38	Eq 3.18c
$i_q = \{1 - F_H/[(F_v + EQ_v) + B'\,L'\,c\cot\phi]\}^m$	=	1.00	Eq 3.14a
$i_\gamma = \{1 - F_H/[(F_v + EQ_v) + B'\,L'\,c\cot\phi]\}^{m+1}$	=	0.00	Eq 3.17a
For $\phi = 0$: $i_c = 1 - (m\,F_H/B'\,L'\,c\,N_c)$	=	0.70	Eq 3.16a

			N_c term		N_q term		N_γ term
Gross q_{ult} =	**9,452**	**psf =**	**9,152**	+	**300**	+	**0**
q_{all} =	**8,590**	**psf = q_{ult} / FS**					
q_{actual} =	**2,612**	**psf = $(F_v + EQ_v)/(B' \times L')$**					
FS_{actual} =	**3.62**	**= q_{ult}/q_{actual}**					**> 1.1 Hence OK**

Case IVA: 40% N-S, 100% Vertical, 40% E-W

Determine forces and moments due to earthquake.

$$EQ_V = \overset{a_V}{100\%} \times \overset{W_p}{0.695} \times (\overset{W_c}{904.5\text{ K}} + 2{,}852\text{ K}) = 2{,}611\text{ K}$$

$$EQhp = \overset{a_H}{0.711} \times \overset{W_c}{904.5\text{ K}} = 643\text{ K}$$

Normal force at base of the cask = Cask DL = 2,852 K

+ Cask $EQvc = 1. \times 0.695 \times 2{,}852\text{ K} = +\ 1{,}982\text{ K} = a_V \times W_c$

$\Rightarrow$ Nc = 4,834 K

$\Rightarrow$ $F_{EQ\ \mu=0.8} = 0.8 \times 4{,}834\text{ K} = 3{,}867\text{ K}$

$$EQhc = \text{Min of } [\overset{a_H}{0.711} \times \overset{W_c}{2{,}852\text{ K}} \ \&\ \overset{\mu}{0.8} \times \overset{N_c}{4{,}834\text{ K}}]$$

2,028 K 3,867K

Note: Use only 40% of the horizontal earthquake forces in this case. 40% of 2,028 K = 811 K, which is < 3,867 K (= $F_{EQ\ \mu=0.8}$); therefore, EQhc = 811 K in both the N-S and E-W directions for this case.

$$\Rightarrow \quad EQ_{H\ N\text{-}S} = \overset{40\%\text{ of }EQhp}{0.4 \times 643\text{ K}} + \overset{Eqhc_{N\text{-}S}}{811\text{ K}} = 1{,}068\text{ K}$$

Since horizontal components are the same for this case, $EQ_{H\ E\text{-}W} = EQ_{H\ N\text{-}S}$

$$\Rightarrow \quad F_H = \sqrt{EQ^2_{H\ E\text{-}W} + EQ^2_{H\ N\text{-}S}} = \sqrt{1{,}068^2 + 1{,}068^2} = 1{,}510\text{ K}$$

Determine moments acting on pad due to casks.

See Figure 6 for identification of Δb. Note: EQvc = 1.0 x 0.695 x 2,852 K = 1,982 K

$$\Delta b_{E\text{-}W} = \frac{9.83' \times EQhc_{E\text{-}W}}{Wc + EQvc} = \frac{9.83' \times 811\text{ K}}{2{,}852\text{ K} + 1{,}982\text{ K}} = 1.65\text{ ft}$$

$$\Sigma M_{@N\text{-}S} = \overset{40\%\ a_H}{1.5' \times 0.4 \times 0.711} \times \overset{W_p}{904.5\text{K}} + \overset{Eqhc_{E\text{-}W}}{3' \times 811\text{ K}} + \overset{\Delta b}{1.65'} \times (\overset{W_c}{2{,}852\text{K}} + \overset{EQvc}{1{,}982\text{ K}})$$

$$= 386\text{ ft-K} + 2{,}433\text{ ft-K} + 7{,}976\text{ ft-K} = 10{,}795\text{ ft-K}$$

The horizontal forces are the same N-S and E-W for this case; therefore,

$$\Sigma M_{@E\text{-}W} = \Sigma M_{@N\text{-}S} = 10{,}795\text{ ft-K}$$

Determine $q_{allowable}$ for FS = 1.1.

DYNAMIC BEARING CAPACITY OF THE CASK STORAGE PADS BASED ON INERTIAL FORCES

Allowable Bearing Capacity of Cask Storage Pads

PSHA 2,000-Yr Earthquake: Case IVA

Based on Inertial Forces Combined:
40 % N-S, 100 % Vert, 40 % E-W

Soil Properties:

c =	**2,200**	Cohesion (psf)	
ϕ =	**0.0**	Friction Angle (degrees)	
γ =	**80**	Unit weight of soil (pcf)	
γ_{surch} =	**100**	Unit weight of surcharge (pcf)	

Foundation Properties:

B' =	**26.6**	Footing Width - ft (E-W)	L' = **63.6** Length - ft (N-S)
D_f =	**3.0**	Depth of Footing (ft)	
FS =	**1.1**	Factor of Safety required for $q_{allowable}$.	**0.711** $g = a_H$
			0.695 $g = a_V$

F_V = **3,757** k & EQ_V = **2,611** k → **6,368** k for F_V

$EQ_{H\,E\text{-}W}$ = **1,068** k & $EQ_{H\,N\text{-}S}$ = **1,068** k → **1,511** k for F_H

$q_{ult} = c\,N_c\,s_c\,d_c\,i_c + \gamma_{surch}\,D_f\,N_q\,s_q\,d_q\,i_q + 1/2\,\gamma\,B\,N_\gamma\,s_\gamma\,d_\gamma\,i_\gamma$

General Bearing Capacity Equation, based on Winterkorn & Fang (1975)

$N_c = (N_q - 1)\cot(\phi)$, but $= 5.14$ for $\phi = 0$	=	5.14	Eq 3.6 & Table 3.2
$N_q = e^{\pi \tan\phi} \tan^2(\pi/4 + \phi/2)$	=	1.00	Eq 3.6
$N_\gamma = 2\,(N_q + 1)\tan(\phi)$	=	0.00	Eq 3.8
$s_c = 1 + (B/L)(N_q/N_c)$	=	1.08	Table 3.2
$s_q = 1 + (B/L)\tan\phi$	=	1.00	"
$s_\gamma = 1 - 0.4\,(B/L)$	=	0.83	"
For $D_f/B \le 1$: $d_q = 1 + 2\tan\phi\,(1 - \sin\phi)^2\,D_f/B$	=	1.00	Eq 3.26
$d_\gamma = 1$	=	1.00	"
For $\phi > 0$: $d_c = d_q - (1 - d_q) / (N_q \tan\phi)$	=	N/A	
For $\phi = 0$: $d_c = 1 + 0.4\,(D_f/B)$	=	1.05	Eq 3.27
$m_B = (2 + B/L) / (1 + B/L)$	=	1.69	Eq 3.18a
$m_L = (2 + L/B) / (1 + L/B)$	=	1.31	Eq 3.18b
If $EQ_{H\,N\text{-}S} > 0$: $\theta_n = \tan^{-1}(EQ_{H\,E\text{-}W} / EQ_{H\,N\text{-}S})$	=	0.79 rad	
$m_n = m_L \cos^2\theta_n + m_B \sin^2\theta_n$	=	1.50	Eq 3.18c
$i_q = \{ 1 - F_H / [(F_v + EQ_v) + B'\,L'\,c\cot\phi] \}^m$	=	1.00	Eq 3.14a
$i_\gamma = \{ 1 - F_H / [(F_v + EQ_v) + B'\,L'\,c\cot\phi] \}^{m+1}$	=	0.00	Eq 3.17a
For $\phi = 0$: $i_c = 1 - (m\,F_H / B'\,L'\,c\,N_c)$	=	0.88	Eq 3.16a

			N_c term		N_q term		N_γ term
Gross q_{ult} =	11,567	psf =	11,267	+	300	+	0

q_{all} = 10,510 psf = q_{ult} / FS

q_{actual} = 3,762 psf = $(F_v + EQ_v) / (B' \times L')$

FS_{actual} = 3.07 = q_{ult} / q_{actual} > 1.1 **Hence OK**

Case IVB: 40% N-S, 40% Vertical, 100% E-W

Determine forces and moments due to earthquake.

$$EQ_V = 0.4 \times \overset{a_V}{0.695} \times (\overset{W_p}{904.5\text{ K}} + \overset{W_c}{2{,}852\text{ K}}) = 1{,}044\text{ K}$$

Normal force at base of the cask = Cask DL = 2,852 K

+ 40% of Cask EQ_{vc} = +0.4 x 0.695 x 2,852 K = + 793 K = 40% of a_V x Wc

$\Rightarrow$ Nc = 3,645 K

$\Rightarrow$ $F_{EQ\ \mu=0.8} = 0.8 \times 3{,}645\text{ K} = 2{,}916\text{ K}$

$$EQ_{hc} = \text{Min of } [\underbrace{\overset{a_H}{0.711} \times \overset{W_c}{2{,}852\text{ K}}}_{2{,}028\text{ K}} \ \&\ \underbrace{\overset{\mu}{0.8} \times \overset{N_c}{3{,}645\text{ K}}}_{2{,}916\text{K}}] \Rightarrow EQ_{hc} = 2{,}028\text{ K, since it is} < F_{EQ\ \mu=0.8}$$

The horizontal inertial force of the casks acting on the pad is less than the friction force at the base of the casks. Applying 40% in the N-S direction, $Eqhc_{N\text{-}S}$ = 0.4 x 2,028 K = 811 K and 100% in the E-W direction, $Eqhc_{E\text{-}W}$ = 2,028 K for this case.

Using 40% of N-S:

$$\Rightarrow \quad EQ_{H\ N\text{-}S} = \overset{40\%\text{ of } EQ_{hp}}{0.4 \times 643\text{ K}} + \overset{Eqhc_{N\text{-}S}}{811\text{ K}} = 1{,}068\text{ K}$$

Using 100% of E-W:

$$\Rightarrow \quad EQ_{H\ E\text{-}W} = \overset{100\%\text{ of } EQ_{hp}}{1.0 \times 643\text{ K}} + \overset{Eqhc_{E\text{-}W}}{2{,}028\text{ K}} = 2{,}671\text{ K}$$

$$\Rightarrow \quad F_H = \sqrt{EQ^2_{H\ E\text{-}W} + EQ^2_{H\ N\text{-}S}} = \sqrt{2{,}671^2 + 1{,}068^2} = 2{,}877\text{ K}$$

Determine moments acting on pad due to casks

See Figure 6 for identification of Δb. Note: EQ_{vc} = 0.4 x 0.695 x 2,852 K = 793 K

$$\Delta b_{E\text{-}W} = \frac{9.83' \times EQ_{hc_{E\text{-}W}}}{Wc + EQ_{vc}} = \frac{9.83' \times 2{,}028\text{ K}}{2{,}852\text{ K} + 793\text{ K}} = 5.47\text{ ft}$$

$$\Sigma M_{@N\text{-}S} = \overset{100\%\ a_H}{1.5' \times 0.711} \times \overset{W_p}{904.5\text{ K}} + \overset{Eqhc_{E\text{-}W}}{3' \times 2{,}028\text{ K}} + \overset{\Delta b}{5.47'} \times (\overset{W_c}{2{,}852\text{K}} + \overset{EQ_{vc}}{793\text{ K}})$$

$$= 965\text{ ft-K} + 6{,}084\text{ ft-K} + 19{,}938\text{ ft-K} = 26{,}987\text{ ft-K}$$

$$\Delta b_{N\text{-}S} = \frac{9.83' \times EQ_{hc_{N\text{-}S}}}{Wc + EQ_{vc}} = \frac{9.83' \times 811\text{ K}}{2{,}852\text{ K} + 793\text{ K}} = 2.19\text{ ft}$$

$$\Sigma M_{@E\text{-}W} = \overset{40\%\ a_H}{1.5' \times 0.4 \times 0.711} \times \overset{W_p}{904.5\text{ K}} + \overset{Eqhc_{N\text{-}S}}{3' \times 811\text{ K}} + \overset{\Delta b}{2.19'} \times (\overset{W_c}{2{,}852\text{K}} + \overset{EQ_{vc}}{793\text{ K}})$$

$$= 386\text{ ft-K} + 2{,}433\text{ ft-K} + 7{,}982\text{ ft-K} = 10{,}801\text{ ft-K}$$

Determine $q_{allowable}$ for FS = 1.1.

STONE & WEBSTER ENGINEERING CORPORATION

5010.65

CALCULATION SHEET

CALCULATION IDENTIFICATION NUMBER				PAGE 46
J.O. OR W.O. NO.	DIVISION & GROUP	CALCULATION NO.	OPTIONAL TASK CODE	
05996.02	G(B)	04 - 7		

DYNAMIC BEARING CAPACITY OF THE CASK STORAGE PADS BASED ON INERTIAL FORCES

Allowable Bearing Capacity of Cask Storage Pads

PSHA 2,000-Yr Earthquake: Case IVB

Based on Inertial Forces Combined:
40 % N-S, 40 % Vert, 100 % E-W

Soil Properties:

$c =$	**2,200**	Cohesion (psf)	
$\phi =$	**0.0**	Friction Angle (degrees)	
$\gamma =$	**80**	Unit weight of soil (pcf)	
$\gamma_{surch} =$	**100**	Unit weight of surcharge (pcf)	

Foundation Properties:

$B' =$	**18.8**	Footing Width - ft (E-W)	$L' =$ **62.5** Length - ft (N-S)
$D_f =$	**3.0**	Depth of Footing (ft)	
$FS =$	**1.1**	Factor of Safety required for $q_{allowable}$.	**0.711** $g = a_H$
			0.695 $g = a_V$

$F_V =$ **3,757** k & $EQ_V =$ **1,044** k → **4,801** k for F_V

$EQ_{H\,E\text{-}W} =$ **2,671** k & $EQ_{H\,N\text{-}S} =$ **1,068** k → **2,877** k for F_H

$q_{ult} = c\,N_c\,s_c\,d_c\,i_c + \gamma_{surch}\,D_f\,N_q\,s_q\,d_q\,i_q + 1/2\,\gamma\,B\,N_\gamma\,s_\gamma\,d_\gamma\,i_\gamma$

General Bearing Capacity Equation, based on Winterkorn & Fang (1975)

$N_c = (N_q - 1)\cot(\phi)$, but $= 5.14$ for $\phi = 0$	=	5.14	Eq 3.6 & Table 3.2
$N_q = e^{\pi \tan\phi} \tan^2(\pi/4 + \phi/2)$	=	1.00	Eq 3.6
$N_\gamma = 2\,(N_q + 1)\tan(\phi)$	=	0.00	Eq 3.8
$s_c = 1 + (B/L)(N_q/N_c)$	=	1.06	Table 3.2
$s_q = 1 + (B/L)\tan\phi$	=	1.00	"
$s_\gamma = 1 - 0.4\,(B/L)$	=	0.88	"
For $D_f/B \le 1$: $d_q = 1 + 2\tan\phi\,(1 - \sin\phi)^2\,D_f/B$	=	1.00	Eq 3.26
$d_\gamma = 1$	=	1.00	"
For $\phi > 0$: $d_c = d_q - (1 - d_q)/(N_q \tan\phi)$	=	N/A	
For $\phi = 0$: $d_c = 1 + 0.4\,(D_f/B)$	=	1.06	Eq 3.27
$m_B = (2 + B/L)/(1 + B/L)$	=	1.69	Eq 3.18a
$m_L = (2 + L/B)/(1 + L/B)$	=	1.31	Eq 3.18b
If $EQ_{H\,N\text{-}S} > 0$: $\theta_n = \tan^{-1}(EQ_{H\,E\text{-}W}/EQ_{H\,N\text{-}S})$	=	1.19 rad	
$m_n = m_L \cos^2\theta_n + m_B \sin^2\theta_n$	=	1.64	Eq 3.18c
$i_q = \{1 - F_H/[(F_v + EQ_v) + B'\,L'\,c\cot\phi]\}^m$	=	1.00	Eq 3.14a
$i_\gamma = \{1 - F_H/[(F_v + EQ_v) + B'\,L'\,c\cot\phi]\}^{m+1}$	=	0.00	Eq 3.17a
For $\phi = 0$: $i_c = 1 - (m\,F_H/B'\,L'\,c\,N_c)$	=	0.64	Eq 3.16a

			N_c term		N_q term		N_γ term
Gross q_{ult} =	**8,508**	**psf =**	**8,208**	+	**300**	+	**0**
q_{all} =	**7,730**	**psf = q_{ult} / FS**					
q_{actual} =	**4,095**	**psf = $(F_v + EQ_v)/(B' \times L')$**					
FS_{actual} =	**2.08**	**= q_{ult} / q_{actual}**					

> 1.1 Hence OK

[geot]\05996\calc\brng_cap\Pad\Wint_Fang-7.xls

Case IVC: 100% N-S, 40% Vertical, 40% E-W

Determine forces and moments due to earthquake.

$$EQ_V = \overset{a_V}{0.4 \times 0.695} \times (\overset{W_p}{904.5\ K} + \overset{W_c}{2{,}852\ K}) = 1{,}044\ K$$

Normal force at base of the cask = Cask DL = 2,852 K

+ 40% of Cask EQ_{vc} = 0.4 x 0.695 x 2,852 K = + 793 K = 40% of a_V x Wc

$\Rightarrow$ Nc = 3,645 K

$\Rightarrow$ $F_{EQ\ \mu=0.8} = 0.8 \times 3{,}645\ K = 2{,}916\ K$

$$EQ_{hc} = \text{Min of } [\underset{2{,}028\ K}{\overset{a_H}{0.711} \times \overset{W_c}{2{,}852\ K}}\ \&\ \underset{2{,}916\ K}{\overset{\mu}{0.8} \times \overset{N_c}{3{,}645\ K}}] \Rightarrow EQ_{hc} = 2{,}028\ K, \text{ since it is} < F_{EQ\ \mu=0.8}$$

The horizontal inertial force of the casks acting on the pad is less than the friction force at the base of the casks. Applying 100% in the N-S direction, $Eqhc_{N\text{-}S}$ = 2,028 K and 40% in the E-W direction, $Eqhc_{E\text{-}W}$ = 0.4 x 2,028 K = 811 K for this case.

Using 100% of N-S:

$$\Rightarrow \quad EQ_{H\ N\text{-}S} = \overset{100\%\ of\ EQ_{hp}}{1.0 \times 643\ K} + \overset{Eqhc_{N\text{-}S}}{2{,}028\ K} = 2{,}671\ K$$

Using 40% of E-W:

$$\Rightarrow \quad EQ_{H\ E\text{-}W} = \overset{40\%\ of\ EQ_{hp}}{0.4 \times 643\ K} + \overset{Eqhc_{E\text{-}W}}{811\ K} = 1{,}068\ K$$

$$\Rightarrow \quad F_H = \sqrt{EQ^2_{H\ E\text{-}W} + EQ^2_{H\ N\text{-}S}} = \sqrt{1{,}068^2 + 2{,}671^2} = 2{,}877\ K$$

Determine moments acting on pad due to casks

See Figure 6 for identification of Δb. Note: EQ_{vc} = 0.4 x 0.695 x 2,852 K = 793 K

$$\Delta b_{E\text{-}W} = \frac{9.83' \times EQ_{hc_{E\text{-}W}}}{Wc + EQ_{vc}} = \frac{9.83' \times 811\,K}{2{,}852\,K + 793\,K} = 2.19\ ft$$

$$\Sigma M_{@N\text{-}S} = \overset{40\%\ a_H}{1.5' \times 0.4 \times 0.711} \times \overset{W_p}{904.5\ K} + \overset{EQ_{hc}}{3' \times 811\ K} + \overset{\Delta b}{2.19'} \times (\overset{W_c}{2{,}852K} + \overset{EQ_{vc}}{793\ K})$$

$$= 386\ ft\text{-}K + 2{,}433\ ft\text{-}K + 7{,}982\ ft\text{-}K = 10{,}801\ ft\text{-}K$$

$$\Delta b_{N\text{-}S} = \frac{9.83' \times EQ_{hc_{N\text{-}S}}}{Wc + EQ_{vc}} = \frac{9.83' \times 2{,}028\,K}{2{,}852\,K + 793\,K} = 5.47\ ft$$

$$\Sigma M_{@E\text{-}W} = \overset{100\%\ a_H}{1.5' \times 0.711} \times \overset{W_p}{904.5\ K} + \overset{EQ_{hc}}{3' \times 2{,}028\ K} + \overset{\Delta b}{5.47'} \times (\overset{W_c}{2{,}852K} + \overset{EQ_{vc}}{793\ K})$$

$$= 965\ ft\text{-}K + 6{,}084\ ft\text{-}K + 19{,}938\ ft\text{-}K = 26{,}987\ ft\text{-}K$$

Determine $q_{allowable}$ for FS = 1.1.

STONE & WEBSTER ENGINEERING CORPORATION

5010.65

CALCULATION SHEET

CALCULATION IDENTIFICATION NUMBER				PAGE 48
J.O. OR W.O. NO.	DIVISION & GROUP	CALCULATION NO.	OPTIONAL TASK CODE	
05996.02	G(B)	04 - 7		

DYNAMIC BEARING CAPACITY OF THE CASK STORAGE PADS BASED ON INERTIAL FORCES

Allowable Bearing Capacity of Cask Storage Pads

PSHA 2,000-Yr Earthquake: Case IVC

Based on Inertial Forces Combined:
100 % N-S, 40 % Vert, 40 % E-W

Soil Properties:

c =	**2,200**	Cohesion (psf)	
ϕ =	**0.0**	Friction Angle (degrees)	
γ =	**80**	Unit weight of soil (pcf)	
γ_{surch} =	**100**	Unit weight of surcharge (pcf)	

Foundation Properties:

B' =	**25.5**	Footing Width - ft (E-W)	L' = **55.8** Length - ft (N-S)
D_f =	**3.0**	Depth of Footing (ft)	
FS =	**1.1**	Factor of Safety required for $q_{allowable}$.	**0.711** $g = a_H$
			0.695 $g = a_V$

F_V = **3,757** k & EQ_V = **1,044** k → **4,801** k for F_V

$EQ_{H\,E\text{-}W}$ = **1,068** k & $EQ_{H\,N\text{-}S}$ = **2,671** k → **2,877** k for F_H

$q_{ult} = c\, N_c\, s_c\, d_c\, i_c + \gamma_{surch}\, D_f\, N_q\, s_q\, d_q\, i_q + 1/2\, \gamma\, B\, N_\gamma\, s_\gamma\, d_\gamma\, i_\gamma$

General Bearing Capacity Equation, based on Winterkorn & Fang (1975)

$N_c = (N_q - 1)\cot(\phi)$, but = 5.14 for $\phi = 0$	=	5.14	Eq 3.6 & Table 3.2
$N_q = e^{\pi \tan\phi} \tan^2(\pi/4 + \phi/2)$	=	1.00	Eq 3.6
$N_\gamma = 2\,(N_q + 1)\tan(\phi)$	=	0.00	Eq 3.8
$s_c = 1 + (B/L)(N_q/N_c)$	=	1.09	Table 3.2
$s_q = 1 + (B/L)\tan\phi$	=	1.00	"
$s_\gamma = 1 - 0.4\,(B/L)$	=	0.82	"
For $D_f/B \le 1$: $d_q = 1 + 2\tan\phi\,(1 - \sin\phi)^2\, D_f/B$	=	1.00	Eq 3.26
$d_\gamma = 1$	=	1.00	"
For $\phi > 0$: $d_c = d_q - (1 - d_q) / (N_q \tan\phi)$	=	N/A	
For $\phi = 0$: $d_c = 1 + 0.4\,(D_f/B)$	=	1.05	Eq 3.27
$m_B = (2 + B/L) / (1 + B/L)$	=	1.69	Eq 3.18a
$m_L = (2 + L/B) / (1 + L/B)$	=	1.31	Eq 3.18b
If $EQ_{H\,N\text{-}S} > 0$: $\theta_n = \tan^{-1}(EQ_{H\,E\text{-}W} / EQ_{H\,N\text{-}S})$	=	0.38 rad	
$m_n = m_L \cos^2\theta_n + m_B \sin^2\theta_n$	=	1.36	Eq 3.18c
$i_q = \{ 1 - F_H / [(F_v + EQ_v) + B'\,L'\,c\cot\phi] \}^m$	=	1.00	Eq 3.14a
$i_\gamma = \{ 1 - F_H / [(F_v + EQ_v) + B'\,L'\,c\cot\phi] \}^{m+1}$	=	0.00	Eq 3.17a
For $\phi = 0$: $i_c = 1 - (m\, F_H / B'\,L'\,c\,N_c)$	=	0.76	Eq 3.16a

			N_c term		N_q term		N_γ term
Gross q_{ult} =	10,052	psf =	9,752	+	300	+	0
q_{all} =	9,130	psf = q_{ult} / FS					
q_{actual} =	3,376	psf = $(F_v + EQ_v) / (B' \times L')$					
FS_{actual} =	2.98	= q_{ult} / q_{actual}				> 1.1	**Hence OK**

[geot]\05996\calc\brng_cap\Pad\Wint_Fang-7.xls

As indicated in Table 2.6-7, the gross allowable bearing pressure for the cask storage pads to obtain a factor of safety of 1.1 against a shear failure from static loads plus the inertial loads due to the design basis ground motion exceeds ~4.8 ksf for all loading cases identified above. The minimum allowable value was obtained for Load Case IIIB, wherein 100% of the earthquake loads act in the E-W direction, 40% in the N-S direction, and 40% in the vertical direction. The actual factor of safety for this very conservative load case was ~1.2, which is greater than the criterion for dynamic bearing capacity (FS ≥ 1.1).

BASED ON MAXIMUM CASK DYNAMIC FORCES FROM THE SSI ANALYSIS

The following pages determine the allowable bearing capacity for the cask storage pads with respect to the maximum dynamic cask driving forces developed for use in the design of the pads in Calculation 05996.02-G(PO17)-2 (CEC, 2001) for the pad supporting 2 casks, 4 casks, and 8 casks. These dynamic forces represent the maximum force occurring at any time during the earthquake at each node in the model used to represent the cask storage pads. It is expected that these maximum forces will not occur at the same time for every node. These forces, therefore, represent an upper bound of the dynamic forces that could act at the base of the pad.

The coordinate system used in the analyses presented on the following pages is the same as that used for the analyses discussed above, and it is shown in Figure 1. Note, this coordinate system is different than the one used in Calculation 05996.02-G(PO17)-2 (CEC, 2001), which is shown on Page B11. Therefore, in the following pages, the X direction is still N-S, the Y direction remains vertical, and the Z direction remains E-W.

These maximum dynamic cask driving forces were confirmed to be less than the maximum force that can be transmitted from the cask to the pad through friction acting at the base of the cask for each of these load cases. This friction force was calculated based on the upper-bound value of the coefficient of friction between the casks and the storage pad (μ = 0.8, as shown in SAR Section 8.2.1.2) x the normal force acting between the casks and the pad. These maximum dynamic cask driving forces can be transmitted to the pad through friction only when the inertial vertical forces act downward; therefore, these analyses are performed only for Load Case IV. These analyses are performed for Load Case IVA, where 40% of the horizontal forces due to the earthquake are applied in both the N-S and the E-W directions, while 100% of the vertical force is applied to obtain the maximum vertical load on the cask storage pad. The width (30 ft) is less in the E-W direction than the length N-S (67 ft); therefore, the E-W direction is the critical direction with respect to a bearing capacity failure.

NOTED ~~JUN 19 1997~~ P. I. Trudeau 1-26-00

STONE & WEBSTER ENGINEERING CORPORATION

CALCULATION SHEET

▲5010.65

CALCULATION IDENTIFICATION NUMBER				PAGE 51
J.O. OR W.O. NO.	DIVISION & GROUP	CALCULATION NO.	OPTIONAL TASK CODE	
05996.02	G(B)	04-7		

DYN BEARING CAPACITY OF PAD: 2-CASK CASE

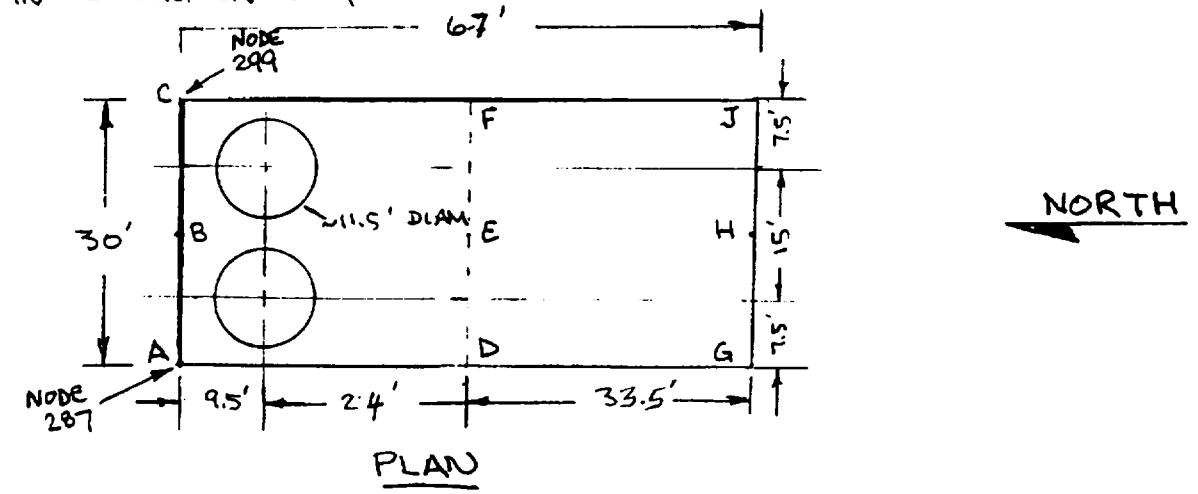

PLAN

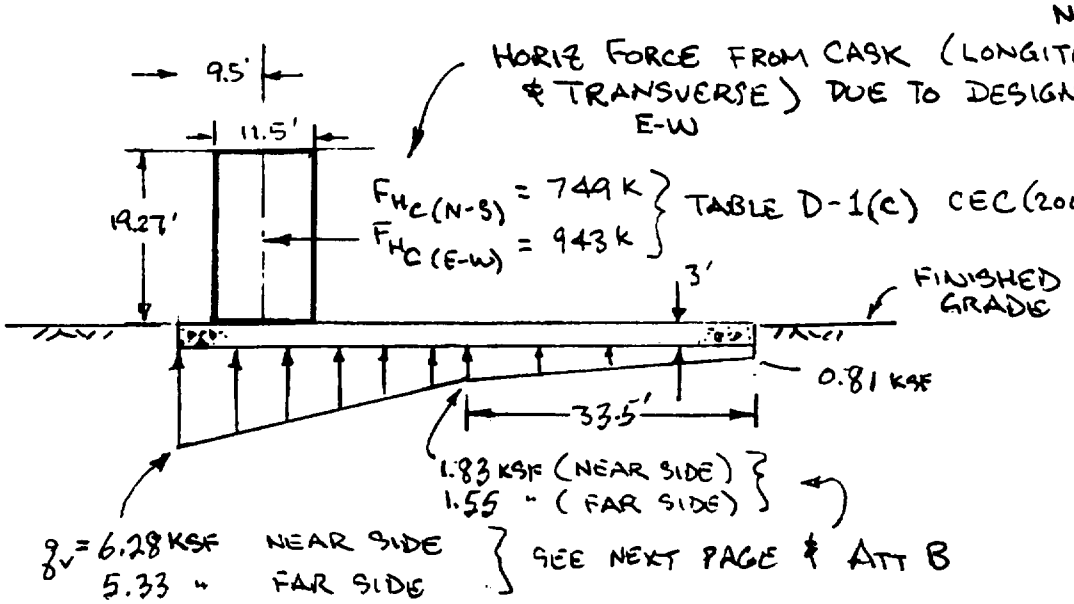

ELEV

* STRESSES AT PAD/SOIL INTERFACE OBTAINED FROM CEC(2001) CALC 05996.02-G(P017)-2, REV. 3 - COPIES OF PERTINENT PAGES ARE INCLUDED IN ATT B OF THIS CALC

~~00866~~

DYN BEARING CAPACITY OF PAD: 2-CASK CASE

SOIL BEARING PRESSURES ARE BASED ON INFO FROM CEC(2001) INCLUDED IN ATT B AND ARE SUMMARIZED IN TABLE 1.

VERTICAL PRESSURES INCLUDE: PAD DL = 0.45 KSF
PAD EQ = 0.24 KSF
SNOW LOAD = 0.045 KSF

CASK LL ≃ 1.35 KSF ALONG LINE AC & IS ASSUMED TO DECREASE LINEARLY TO 0 ALONG LINE DF.

CASK EQ PRESSURES ARE SHOWN ON TABLE 1.

SUMMING THESE VERTICAL PRESSURES RESULTS IN THE FOLLOWING MAXIMUM TOTAL PRESSURE DISTRIBUTION. NOTE, LOADING FROM CASKS & PAD ARE ESSENTIALLY APPLIED TO ONLY ~ 1/2 OF THE PAD.

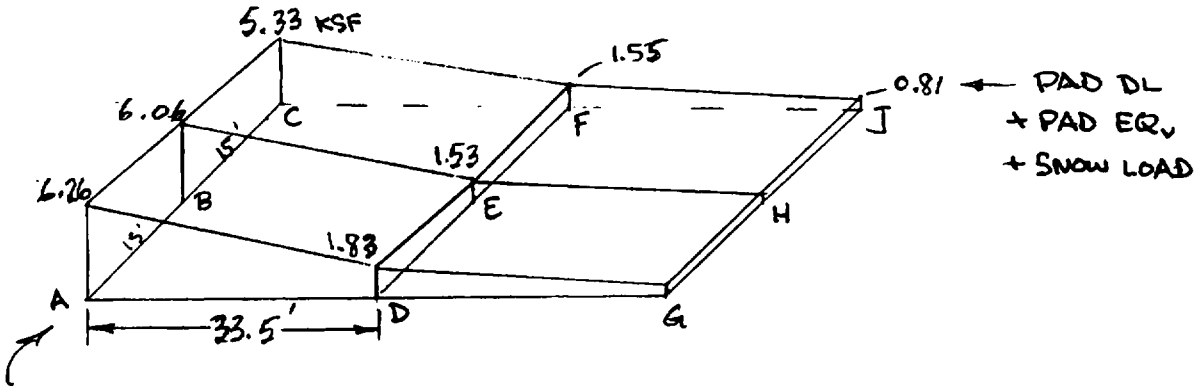

FOR LOADED HALF OF PAD:

$$F_v \simeq \left[\frac{15'}{2} \times \overbrace{\left(6.26 + 2\times 6.06 + 5.33\right)^{KSF}}^{177.82} + \frac{15'}{2}\overbrace{\left(1.83 + 2\times 1.53 + 1.55\right)^{KSF}}^{48.30}\right] \frac{33.5}{2}$$

$F_v \simeq 3790$ K FOR LOADED 1/2 OF PAD

$$A_{AC} \sim 177.82 \frac{K}{FT} = 30' \cdot q_{AVG_{AC}} \Rightarrow q_{AVG_{AC}} = 5.92 \text{ KSF}$$

$$A_{DF} \sim 48.30 \frac{K}{FT} = 30\, q_{AVG_{DF}} \Rightarrow q_{AVG_{DF}} = 1.61 \text{ KSF}$$

~~0.086~~

DYN BEARING CAPACITY OF PAD: 2-CASK CASE

DETERMINE ~ ECCENTRICITY OF F_V IN L DIRECTION (N-S) USING $q_{AVG\,AC}$ & $q_{AVG\,DF}$

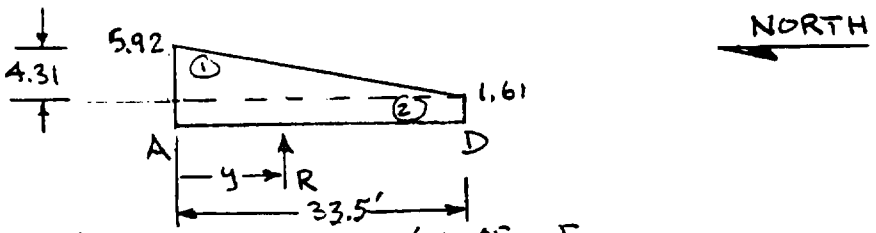

ΣM_A TO FIND LOC'N OF F_V

$$R\,y = \tfrac{1}{2}\,4.31 \times 33.5 \times \tfrac{1}{3}\,33.5 + 1.61 \times 33.5 \times \frac{33.5^2}{2}$$

$$R = \tfrac{1}{2}\,4.31 \times 33.5 + 1.61 \times 33.5 = 72.19 + 53.94 = 126.1\ K$$

$$y = \frac{806.15 + 903.41}{126.1}\ \text{K-FT} = 13.55\ \text{FT}$$

DETERMINE ECCENTRICITY OF F_V IN B DIRECTION (E-W) USING MAX SOIL PRESSURES ALONG LINE AC

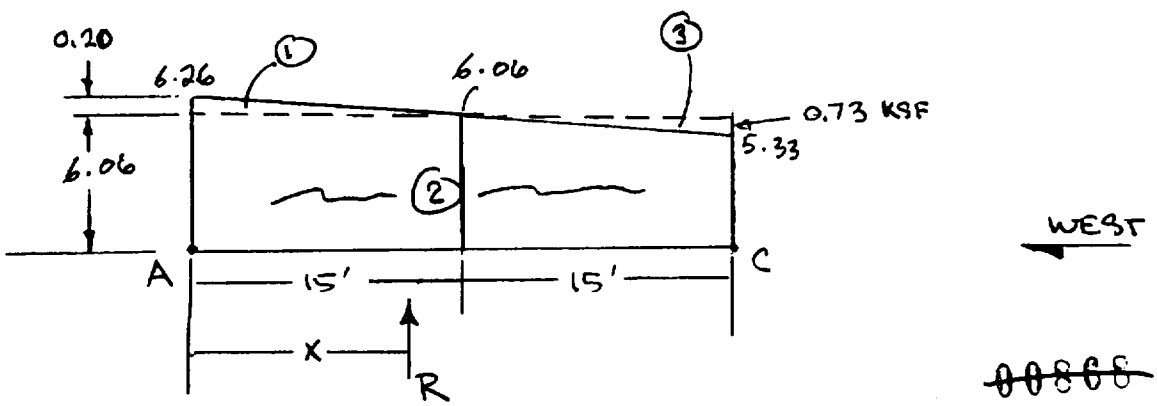

~~00868~~

STONE & WEBSTER ENGINEERING CORPORATION

CALCULATION SHEET

▲ 5010.65

CALCULATION IDENTIFICATION NUMBER				
9				PAGE 54
J.O. OR W.O. NO.	DIVISION & GROUP	CALCULATION NO.	OPTIONAL TASK CODE	
05996.02	G(B)	04-7		

DYN BEARING CAPACITY OF PAD : 2-CASK CASE

ΣM_A

	AREA (K/FT)	MOMENT ARM (FT)	MOMENT K-FT/FT
1	$\frac{1}{2}$ 0.20 KSF × 15' = 1.5	$\frac{1}{3} \cdot 15' = 5'$	7.5
2	6.06 KSF × 30' = 181.8	$\frac{1}{2} \cdot 30' = 15'$	2,727
3	$-\frac{1}{2}$ 0.73 KSF × 15' = -5.48	$15 + \frac{2}{3} 15 = 25'$	- 136.88
	$\Sigma F_V = R = 177.8$ K/FT		2597.6

$$\therefore \quad x = \frac{\Sigma M_A}{\Sigma F_V} = \frac{2597.6 \text{ K-FT/FT}}{177.8 \text{ K/FT}} = 14.61'$$

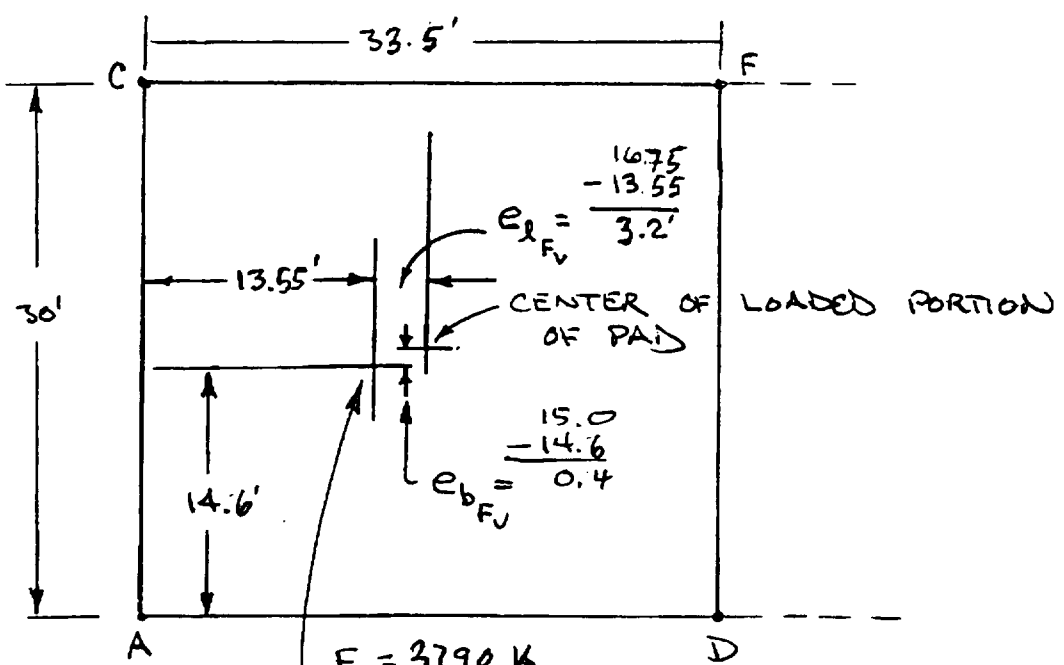

$F_V = 3790$ K

POINT OF APPLICATION OF F_V DUE TO PAD (DL+EQ) & CASKS (LL+EQ) ~~00000~~ FOR 2-CASK CASE

STONE & WEBSTER ENGINEERING CORPORATION

CALCULATION SHEET

▲ 5010 65

10 CALCULATION IDENTIFICATION NUMBER				PAGE 55
J.O. OR W.O. NO. 05996.02	DIVISION & GROUP G(B)	CALCULATION NO. 04-7	OPTIONAL TASK CODE	

DYN BEARING CAPACITY OF PAD: 2-CASK CASE

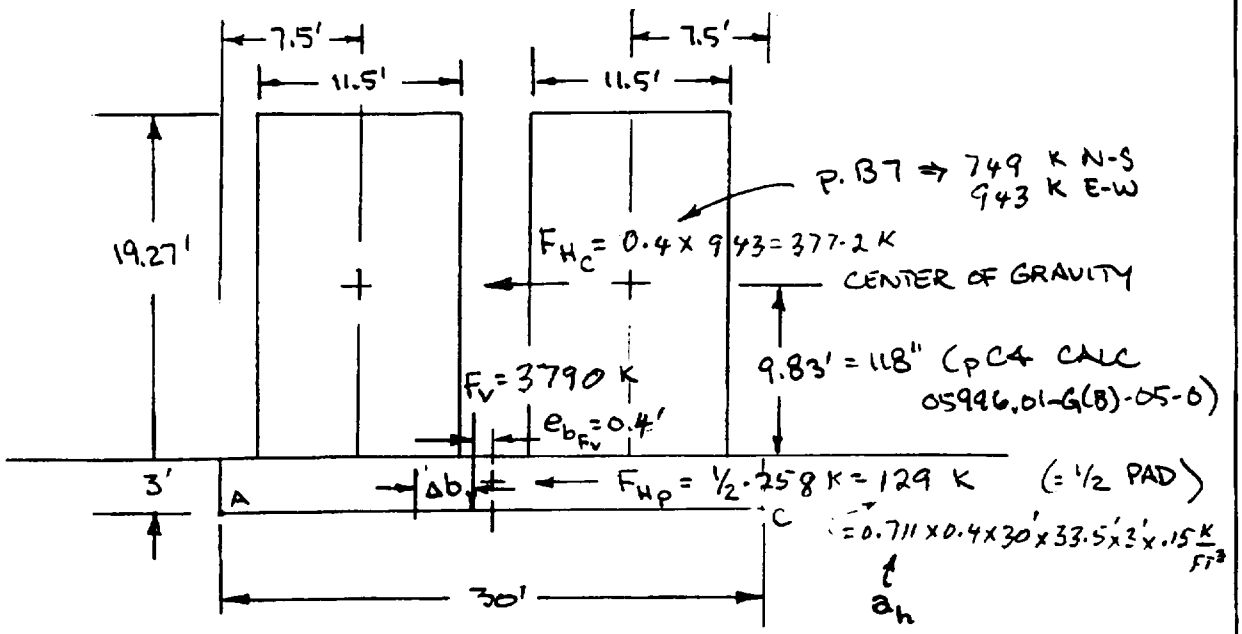

$\Sigma M_{F_V @ \text{BOTTOM OF PAD}}$ TO FIND LOC'N OF RESULTANT TO RESIST F_H's

$$R\Delta b = 1.5' \times \underbrace{\frac{129\,K}{2}}_{1/2\ \text{PAD}^*} + (3' + 9.83')\ \underbrace{377.2\,K}_{\text{2-CASKS TRANSVERSE LOADING (E-W)}}$$

$R = F_V = 3790$ K

$$\therefore \Delta b = \frac{193.5 + 4839.5}{3790\ K}\ \text{K-FT} = 1.30\ \text{FT}$$

ADD $e_{b_{F_V}} = 0.4 \Rightarrow e_b = 1.30' + 0.4' = 1.7'$

$$B' = B - 2e_b = 30' - 2 \times 1.7 = 26.6'$$

* NOTE: HORIZ INERTIA OF OTHER 1/2 OF PAD $\left(\frac{322\,K}{30' \times 33.5} = 0.33\ \text{KSF}\right)$ IS RESISTED BY $C = 1.4$ KSF & $N \tan\phi$ w/ $\phi = 21.3°$ ALONG BASE OF THAT 1/2 OF PAD

~~00870~~

DYN BEARING CAPACITY OF PAD: 2-CASK CASE

CALCULATE L' SIMILARLY FOR LONGITUDINAL DIRECTION

$F_{H_{C_L}} = 300\ K$ (= 40% $Q_{yd_{max}}$ FROM p B7 FOR 2 CASKS)

ΣM_{F_v}

$$R\,\Delta l = \underbrace{1.5' \times \frac{129\ K}{2}}_{1/2\ PAD} + \underbrace{(3' + 9.83')(300\ K)}_{2\text{-CASKS LONGITUDINAL LOADS}}$$

$R = F_v = 3790\ K$

$$\therefore \Delta l = \frac{193.5\ K\text{-}FT + 3849\ K\text{-}FT}{3790\ K} = 1.07\ FT$$

ADD $e_{l_{F_v}} = 3.2' \Rightarrow e_l = 1.07' + 3.2' = 4.27'$

$L' = L - 2e_l = 33.5 - 2 \times 4.27' = 24.96'$ ← < 26.6' ∴ THIS = B' & L' = 26.6'

$$q_{ACTUAL} = \frac{F_v}{B' \times L'} = \frac{3790\ K}{24.96' \times 26.6'} = 5.71\ KSF$$

CALC q_{ALLOW} FOR THE FOLLOWING: B' = 24.96' L' = 26.6'

$F_{H_{E\text{-}W}} = 377.2\ K + 129\ K = 506.2\ K$ (129 K: 1/2 PAD EQ_h; 377.2 K: 2-CASK EQ_h (p B7))

$F_{H_{N\text{-}S}} = 300\ K$ N-S + 129 K PAD = 429 K N-S

FS = 1.1

$F_v = 3790\ K$ FOR 2-CASK (STATIC + DYN)

ASSUME $\gamma_{SURCH} = 100$ PCF FOR SOIL CEMENT &

$D_f = 3'$ (TOP OF PAD FLUSH WITH GRADE)

FOR DYN LOADS, $\phi = 0°$ $c = 2.2$ KSF

~~00871~~

6

DYNAMIC BEARING CAPACITY OF THE CASK STORAGE PADS BASED ON MAXIMUM CASK DYNAMIC FORCES FROM THE SSI ANALYSIS

ALLOWABLE BEARING CAPACITY OF CASK STORAGE PADS WITH 2 CASKS

PSHA 2,000-Yr Earthquake: Case IV — **40 % N-S, 100 % Vert, 40 % E-W**

Soil Properties:

c =	**2,200**	Cohesion (psf)	
ϕ =	**0.0**	Friction Angle (degrees)	
γ =	**80**	Unit weight of soil (pcf)	
γ_{surch} =	**100**	Unit weight of surcharge (pcf)	

Foundation Properties:

B' =	**25.0**	Footing Width - ft (E-W)	L' = **26.6** Length - ft (N-S)
D_f =	**3.0**	Depth of Footing (ft)	
FS =	**1.1**	Factor of Safety required for $q_{allowable}$.	

F_V = **3,790** k (Includes EQ_V)

$EQ_{H\,E\text{-}W}$ = **506** k & $EQ_{H\,N\text{-}S}$ = **429** k → **664** k for F_H

$q_{ult} = c\,N_c\,s_c\,d_c\,i_c + \gamma_{surch}\,D_f\,N_q\,s_q\,d_q\,i_q + 1/2\,\gamma\,B\,N_\gamma\,s_\gamma\,d_\gamma\,i_\gamma$ — **General Bearing Capacity Equation, based on Winterkorn & Fang (1975)**

$N_c = (N_q - 1)\cot(\phi)$, but = 5.14 for $\phi = 0$	=	5.14	Eq 3.6 & Table 3.2
$N_q = e^{\pi \tan\phi}\tan^2(\pi/4 + \phi/2)$	=	1.00	Eq 3.6
$N_\gamma = 2(N_q + 1)\tan(\phi)$	=	0.00	Eq 3.8
$s_c = 1 + (B/L)(N_q/N_c)$	=	1.18	Table 3.2
$s_q = 1 + (B/L)\tan\phi$	=	1.00	"
$s_\gamma = 1 - 0.4\,(B/L)$	=	0.62	"
For $D_f/B \le 1$: $d_q = 1 + 2\tan\phi\,(1 - \sin\phi)^2\,D_f/B$	=	1.00	Eq 3.26
$d_\gamma = 1$	=	1.00	"
For $\phi > 0$: $d_c = d_q - (1 - d_q)/(N_q\tan\phi)$	=	N/A	
For $\phi = 0$: $d_c = 1 + 0.4\,(D_f/B)$	=	1.05	Eq 3.27
$m_B = (2 + B/L)/(1 + B/L)$	=	1.69	Eq 3.18a
$m_L = (2 + L/B)/(1 + L/B)$	=	1.31	Eq 3.18b
If $EQ_{H\,N\text{-}S} > 0$: $\theta_n = \tan^{-1}(EQ_{H\,E\text{-}W}/EQ_{H\,N\text{-}S})$	=	0.87 rad	
$m_n = m_L\cos^2\theta_n + m_B\sin^2\theta_n$	=	1.53	Eq 3.18c
$i_q = \{1 - F_H/[(F_v + EQ_v) + B'L'c\cot\phi]\}^m$	=	1.00	Eq 3.14a
$i_\gamma = \{1 - F_H/[(F_v + EQ_v) + B'L'c\cot\phi]\}^{m+1}$	=	0.00	Eq 3.17a
For $\phi = 0$: $i_c = 1 - (m\,F_H/B'L'c\,N_c)$	=	0.86	Eq 3.16a

			N_c term		N_q term		N_γ term
Gross q_{ult} =	**12,419**	**psf =**	**12,119**	+	**300**	+	**0**

q_{all} =	**11,280**	**psf = q_{ult} / FS**
q_{actual} =	**5,708**	**psf = $(F_v + EQ_v)/(B' \times L')$**
FS_{actual} =	**2.18**	**= q_{ult}/q_{actual}** > **1.1 Hence OK**

STONE & WEBSTER ENGINEERING CORPORATION

CALCULATION SHEET

▲ 5010 65

CALCULATION IDENTIFICATION NUMBER				PAGE 58
J.O. OR W.O. NO.	DIVISION & GROUP	CALCULATION NO.	OPTIONAL TASK CODE	
05996.02	G(B)	04-7		

DYN BEARING CAPACITY OF PAD: 4-CASK CASE

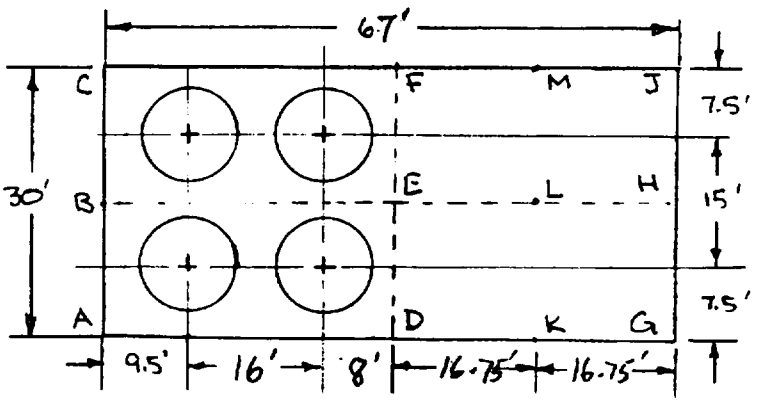

PLAN

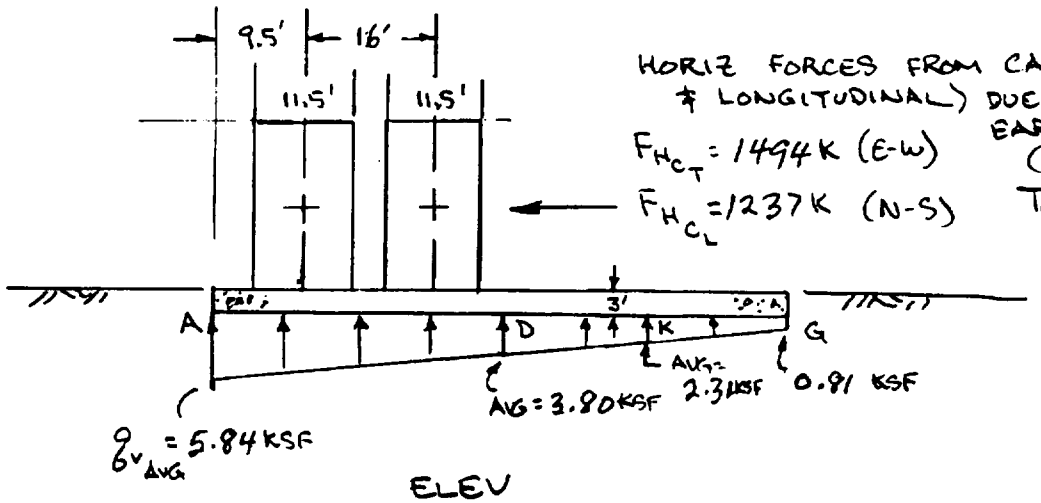

HORIZ FORCES FROM CASK (TRANSVERSE & LONGITUDINAL) DUE TO DESIGN EARTHQUAKE (FROM p 87)

$F_{H_{C_T}}$ = 1494 K (E-W)

$F_{H_{C_L}}$ = 1237 K (N-S)

TABLE D-1(c) CEC (2001)

ELEV

STRESSES AT PAD/SOIL INTERFACE FROM CEC (2001) SEE ATTACHMENT B AND NEXT 2 PAGES.

~~00874~~

DYN BEARING CAPACITY OF PAD: 4-CASK CASE

SOIL BEARING PRESSURES ARE BASED ON INFO FROM CEC (2001) INCLUDED IN ATT B AND ARE SUMMARIZED IN TABLE 1.

VERTICAL PRESSURES INCLUDE: PAD DL = 0.45 KSF
PAD EQR = 0.31 KSF
SNOW LOAD = 0.045 KSF

LL OF CASKS = 1.71 KSF ALONG LINE AC & IS ASSUMED TO DECREASE LINEARLY TO 0 ALONG LINE GJ.

CASK EQ PRESSURES ARE SHOWN ON TABLE 1
RESULTING PRESSURE DISTRIBUTION:

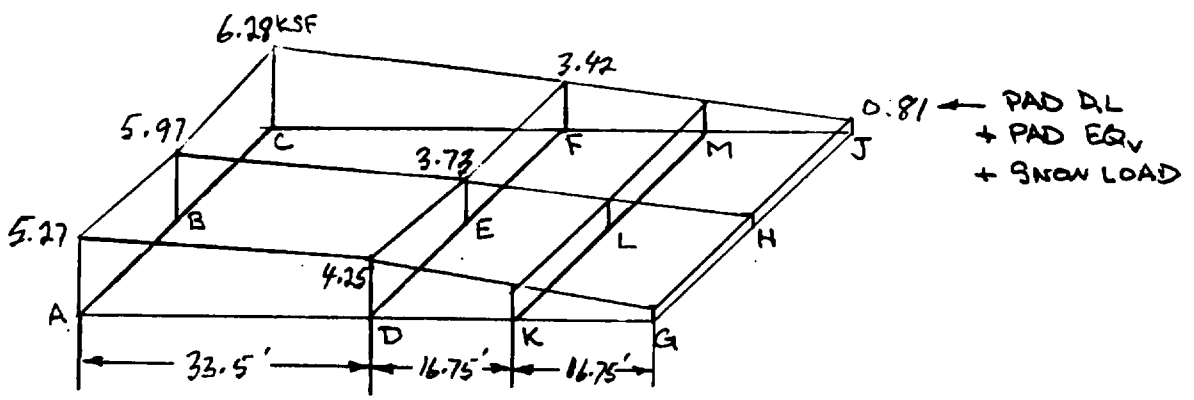

ASSUME 3/4 OF PAD IS EFFECTIVE IN RESISTING LOADS OF 4-CASK CASE

$\therefore \quad B = 30' \qquad L = \frac{3}{4}\,67 = 50.25'$

LINEARLY DISTRIBUTE STATIC + DYN LOADING FROM LINE DF TO 50.25' AWAY FROM LINE AC & DETERMINE F_V

VERT STRESSES	KSF	POINT
0.5 (4.25 + 0.81)	= 2.53	K
0.5 (3.73 + 0.81)	= 2.27	L
0.5 (3.42 + 0.81)	= 2.12	M

~~00875~~

STONE & WEBSTER ENGINEERING CORPORATION

CALCULATION SHEET

▲ 5010.65

B	CALCULATION IDENTIFICATION NUMBER			PAGE 60
J.O. OR W.O. NO. 05996.02	DIVISION & GROUP G(B)	CALCULATION NO. 04-7	OPTIONAL TASK CODE	

DYN BEARING CAPACITY OF PAD: 4-CASK CASE

CALCULATE F_v

ALONG LINE	AREA =	=	K/FT
AC	$\frac{15'}{2}(5.27 + 2\times5.97 + 6.28)$ KSF	= 176.18	K/FT
DF	$\frac{15'}{2}(4.25 + 2\times3.73 + 3.42)$	= 113.48	
KM	$\frac{15'}{2}(2.53 + 2\times2.27 + 2.12)$	= 68.93	

$$F_v \sim \frac{33.5}{2}(176.18 + 113.48)^{K/1} + \frac{16.75'}{2}(113.48 + 68.93)^{K/1}$$

$$F_v = 4851.8\ K + 1527.7\ K = \underline{6379.5\ K}$$

ESTIMATE LOCATION WHERE F_v ACTS ON 30' x 50.25 PORTION OF PAD.

NOTE AVG VERT STRESS ALONG LINES.

LINE

$$AC = \frac{176.18\ K/FT}{30\ FT} = 5.87\ KSF$$

$$DF = \frac{113.48\ K/FT}{30'} = 3.78\ KSF$$

$$KM = \frac{68.93\ K/FT}{30'} = 2.30\ KSF$$

~~00876~~

STONE & WEBSTER ENGINEERING CORPORATION

CALCULATION SHEET

▲5010.65

CALCULATION IDENTIFICATION NUMBER				PAGE 61
J.O. OR W.O. NO. 05996.02	DIVISION & GROUP G(B)	CALCULATION NO. 04-7	OPTIONAL TASK CODE	

DYN BEARING CAPACITY OF PAD: 4-CASK CASE

DETERMINE ECCENTRICITY OF F_V WRT B, $e_{B_{F_V}}$

ALONG LINE AC

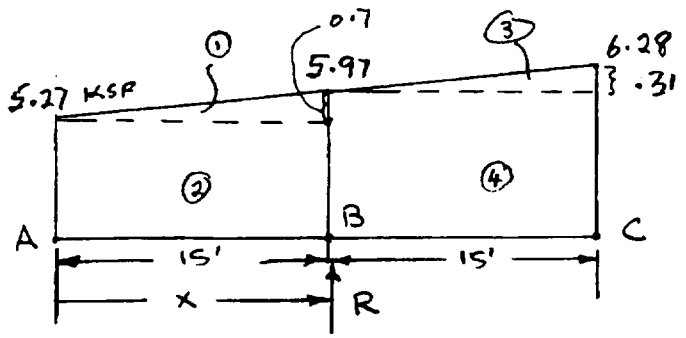

ΣM_A

	AREA	K/FT	MOMENT ARM (FT)	MOMENT
1	$\frac{1}{2} \times 0.7 \frac{K}{FT^2} \times 15' =$	5.25	$2/3 \times 15 = 10'$	52.5
2	$5.27 \frac{K}{FT^2} \times 15' =$	79.05	$1/2 \times 15 = 7.5'$	592.88
3	$\frac{1}{2} \times .31 \frac{K}{FT^2} \times 15' =$	2.325	$15 + 2/3 \times 15 = 25'$	58.125
4	$5.97 \frac{K}{FT^2} \times 15' =$	89.55	$15 + 1/2 \times 15 = 22.5$	2014.875

$F_V = \Sigma = 176.175$ $\qquad R_X = \Sigma = 2718.38$

$$\therefore x = \frac{2718.38 \text{ K-FT/FT}}{176.175 \text{ K/FT}} = 15.4'$$

$$e_{B_{F_V}} = \frac{B}{2} - x = 15' - 15.4' = 0.4'$$

~~00877~~

DYN BEARING CAPACITY OF PAD: 4-CASK CASE

DETERMINE ECCENTRICITY OF F_v WRT L, $e_{L_{F_v}}$

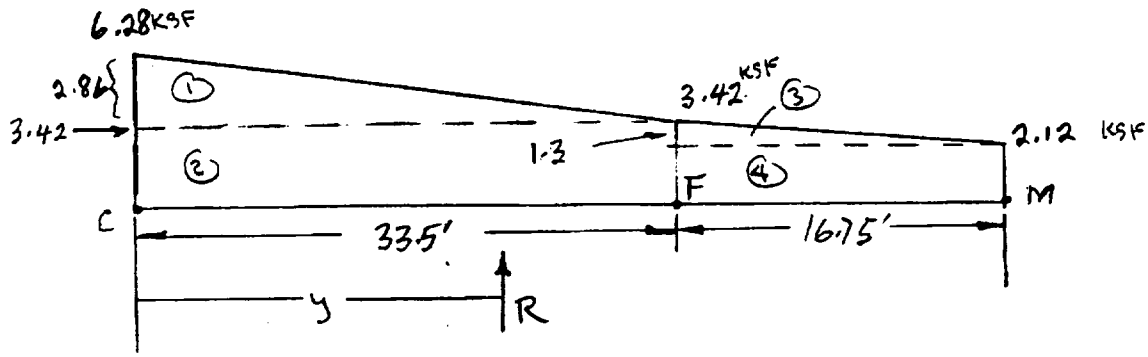

ΣM_A TO FIND y

	FORCE (K/L)	MOMENT ARM (FT)	MOMENT K·FT/L.F.
①	$\frac{1}{2}\,2.86 \times 33.5' = 47.905$	$\frac{1}{3} \times 33.5' = 11.16'$	534.9
②	$3.42 \times 33.5 = 114.57$	$\frac{1}{2} \times 33.5' = 16.75'$	1919.0
③	$\frac{1}{2}\,1.30 \times 16.75 = 10.89$	$33.5' + \frac{1}{3}16.75' = 39.08$	425.6
④	$2.12 \times 16.75 = 35.51$	$33.5' + \frac{16.75}{2} = 41.875'$	1487.0

$R = \Sigma F_v = 208.88$ K/L $\qquad Ry = \Sigma M = 4366.5$

$$y = \frac{\Sigma M}{\Sigma F_v} = \frac{4366.5 \text{ K-FT/LF}}{208.88 \text{ K/LF}} = 20.9 \text{ FT}$$

$$e_{L_{F_v}} = \frac{L}{2} - y = 25.125' - 20.9' = 4.23'$$

AS SHOWN ON NEXT PAGE

~~00878~~

STONE & WEBSTER ENGINEERING CORPORATION

CALCULATION SHEET

▲ 5010.65

D	CALCULATION IDENTIFICATION NUMBER			PAGE 63
J.O. OR W.O. NO.	DIVISION & GROUP	CALCULATION NO.	OPTIONAL TASK CODE	
05996.02	G(B)	04-7		

DYN BEARING CAPACITY OF PAD: 4-CASK CASE

PLAN VIEW OF PAD SHOWING LOCATION OF VERTICAL FORCE DUE TO VERTICAL STRESSES FOR 4-CASK LOADING CASE

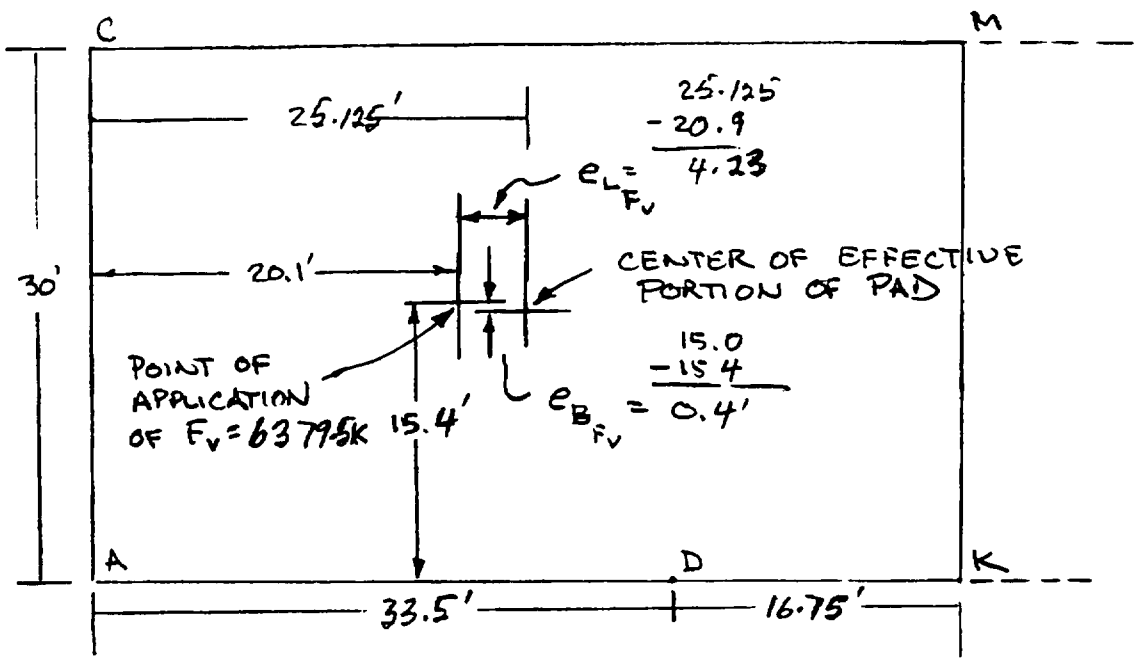

~~00879~~

STONE & WEBSTER ENGINEERING CORPORATION

CALCULATION SHEET

▲ 5010.65

E	CALCULATION IDENTIFICATION NUMBER			PAGE 64
J.O. OR W.O. NO. 05996.02	DIVISION & GROUP G(B)	CALCULATION NO. 04-7	OPTIONAL TASK CODE	

DYN BEARING CAPACITY OF PAD: 4-CASK CASE

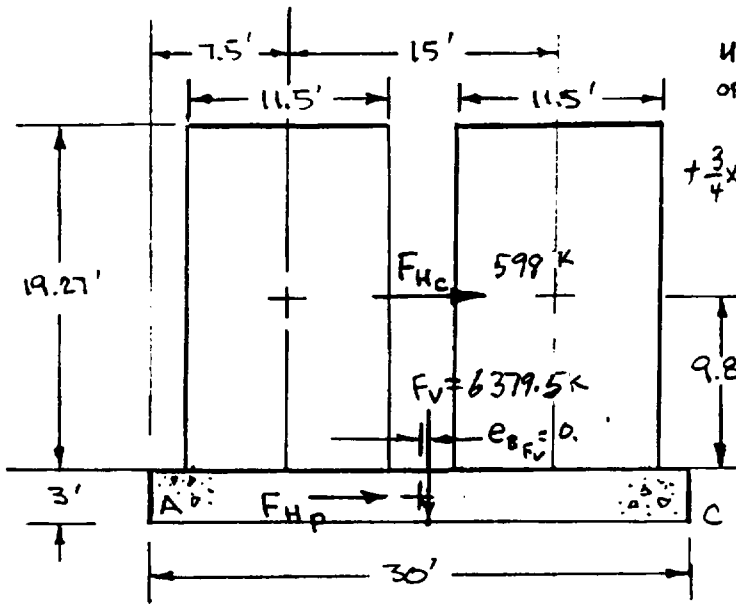

4-CASK Q_{xd} IN TABLE D-1(c)

use 40% of $F_{H_{C_T}} = 1494\,K \times 0.4 = 598\,K$

$+ \frac{3}{4} \times 40\% F_{H_P} = \frac{3}{4} \cdot 257 \Rightarrow 791\,k = EQ_{H\,E\text{-}W}$

CENTER OF GRAVITY OF CASK

9.83' = 118" (p C4 CALC 05996.01-G(B)-05-0)

$40\% F_{H_P} = 257^K$ FOR 30'×67'

$= 0.4 \times 0.7Wg \times 30' \times 67' \times 3' \times 0.15^{K/FT^3}/g$

ΣM_{F_V} TO FIND LOC'N OF RESULTANT TO RESIST F_H'S

3/4 PAD

40% 4-CASK TRANSVERSE F_H

$R\,\Delta b = 1.5' \times \frac{3}{4} \times 257^K + (3' + 9.83')\,599^K$

$\uparrow$ = $F_V = 6379.5^K$ ON 30×50.25' PORTION OF PAD

$$\therefore \Delta b = \frac{289 + 7{,}672}{6379.5^K}\ \text{K-FT} = 1.25' = e_{B_{F_H}}$$

$$e_b = e_{B_{F_V}} + e_{B_{F_H}} = 0.4' + 1.25' = 1.65'$$

$$B' = B - 2e_B = 30' - 2 \times 1.65' = \underline{26.7'}$$

~~00880~~

DYN BEARING CAPACITY OF PAD: 4-CASK CASE

CALCULATE L' SIMILARLY FOR LONGITUDINAL F_H

$F_{H_{C_L}} = 495K = Q_{yd_{MAX\ 4\ CASKS}}$ (40% of 1237 K) TABLE D-1(c) p B7

$+ \frac{3}{4} \times 40\% F_{HP} = \frac{3}{4}\ 257 \Rightarrow EQ_{H\ N-S} = 688\ K$

ΣM_{F_V} $\quad R\Delta l = 1.5' \times \frac{3}{4} \times 257\ K + (3' + 9.83')\ 495\ K$ ($F_{H_{C_L}}$ 4 CASKS)

$R = F_V = 6379.5\ K$ ON EFFECTIVE PORTION OF PAD (30' x 50.25')

$$\Delta l = -\frac{289\ K\text{-}FT + 6{,}351\ K\text{-}FT}{6379.5\ K} = 1.04' = e_{L_{F_H}}$$

$$e_L = e_{L_{F_V}} + e_{L_{F_H}} = 4.23' + 1.04 = 5.27'$$

$$L' = L - 2e_L = 50.25' - 2 \times 5.27' = 39.71'$$

$$q_{ACTUAL} = \frac{F_V}{B' \times L'} = \frac{6379.5^K}{26.7 \times 39.71} = \underline{\underline{6.02\ KSF}}$$

CALC q_{ALLOW} FOR THE FOLLOWING: $B' = 26.7'$ $L' = 39.71'$

$F_V = 6379.5K$ FOR 4-CASK CASE (STATIC + DYN)

$EQ_{H\ E-W} = \frac{3}{4}\ 257 + 598 = 791\ K$ E-W (PAD, F_{HC})

$EQ_{H\ N-S} = \ '' + 495 = 688$ N-S

$FS = 1.1$ $\quad \gamma_{SURCH} = 100\ PCF$ $\quad \gamma = 80\ PCF$ $\quad D_f = 3'$

$\phi = 0°$ $\quad C = 2.2\ KSF$

~~BDSF~~ 6

ALLOWABLE BEARING CAPACITY OF CASK STORAGE PADS WITH 4 CASKS

PSHA 2,000-Yr Earthquake: Case IV — **40 % N-S, 100 % Vert, 40 % E-W**

Soil Properties:

c =	**2,200**	Cohesion (psf)	
ϕ =	**0.0**	Friction Angle (degrees)	
γ =	**80**	Unit weight of soil (pcf)	
γ_{surch} =	**100**	Unit weight of surcharge (pcf)	

Foundation Properties:

B' =	**26.7**	Footing Width - ft (E-W)	L' = **39.7** Length - ft (N-S)
D_f =	**3.0**	Depth of Footing (ft)	
FS =	**1.1**	Factor of Safety required for $q_{allowable}$.	

F_V = **6,380** k (Includes EQ_V)

$EQ_{H\,E\text{-}W}$ = **791** k & $EQ_{H\,N\text{-}S}$ = **688** k → **1,048** k for F_H

$q_{ult} = c\,N_c\,s_c\,d_c\,i_c + \gamma_{surch}\,D_f\,N_q\,s_q\,d_q\,i_q + 1/2\,\gamma\,B\,N_\gamma\,s_\gamma\,d_\gamma\,i_\gamma$ **General Bearing Capacity Equation, based on Winterkorn & Fang (1975)**

$N_c = (N_q - 1)\cot(\phi)$, but = 5.14 for $\phi = 0$	=	5.14	Eq 3.6 & Table 3.2
$N_q = e^{\pi \tan\phi} \tan^2(\pi/4 + \phi/2)$	=	1.00	Eq 3.6
$N_\gamma = 2\,(N_q + 1)\tan(\phi)$	=	0.00	Eq 3.8
$s_c = 1 + (B/L)(N_q/N_c)$	=	1.13	Table 3.2
$s_q = 1 + (B/L)\tan\phi$	=	1.00	"
$s_\gamma = 1 - 0.4\,(B/L)$	=	0.73	"
For $D_f/B \le 1$: $d_q = 1 + 2\tan\phi\,(1 - \sin\phi)^2\,D_f/B$	=	1.00	Eq 3.26
$d_\gamma = 1$	=	1.00	"
For $\phi > 0$: $d_c = d_q - (1-d_q)/(N_q\tan\phi)$	=	N/A	
For $\phi = 0$: $d_c = 1 + 0.4\,(D_f/B)$	=	1.04	Eq 3.27
$m_B = (2 + B/L)/(1 + B/L)$	=	1.69	Eq 3.18a
$m_L = (2 + L/B)/(1 + L/B)$	=	1.31	Eq 3.18b
If $EQ_{H\,N\text{-}S} > 0$: $\theta_n = \tan^{-1}(EQ_{H\,E\text{-}W}/EQ_{H\,N\text{-}S})$	=	0.85 rad	
$m_n = m_L\cos^2\theta_n + m_B\sin^2\theta_n$	=	1.53	Eq 3.18c
$i_q = \{1 - F_H/[(F_v + EQ_v) + B'\,L'\,c\cot\phi]\}^m$	=	1.00	Eq 3.14a
$i_\gamma = \{1 - F_H/[(F_v + EQ_v) + B'\,L'\,c\cot\phi]\}^{m+1}$	=	0.00	Eq 3.17a
For $\phi = 0$: $i_c = 1 - (m\,F_H/B'\,L'\,c\,N_c)$	=	0.87	Eq 3.16a

			N_c term		N_q term		N_γ term
Gross q_{ult} =	**11,879**	**psf =**	**11,579**	+	**300**	+	**0**

q_{all} =	**10,790**	**psf = q_{ult} / FS**
q_{actual} =	**6,017**	**psf = $(F_v + EQ_v)/(B' \times L')$**
FS_{actual} =	**1.97**	**= q_{ult}/q_{actual}** > 1.1 **Hence OK**

STONE & WEBSTER ENGINEERING CORPORATION

CALCULATION SHEET

▲5010.65

CALCULATION IDENTIFICATION NUMBER				PAGE 67
J.O. OR W.O. NO.	DIVISION & GROUP	CALCULATION NO.	OPTIONAL TASK CODE	
05996.02	G(B)	04-7		

DYN BEARING CAPACITY OF PAD: 8-CASK CASE

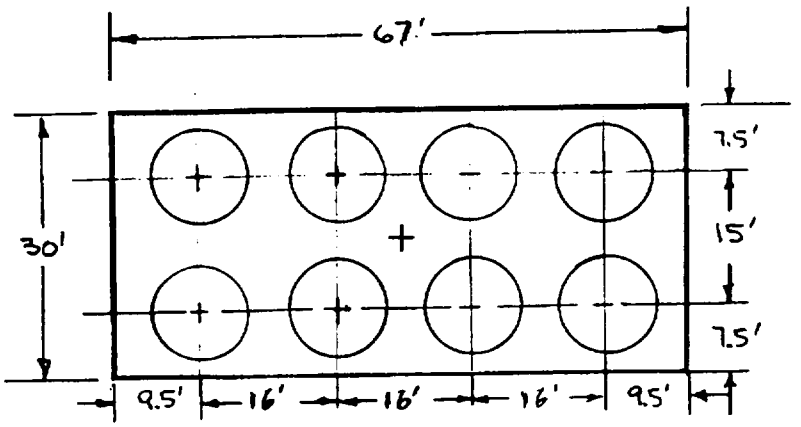

PLAN

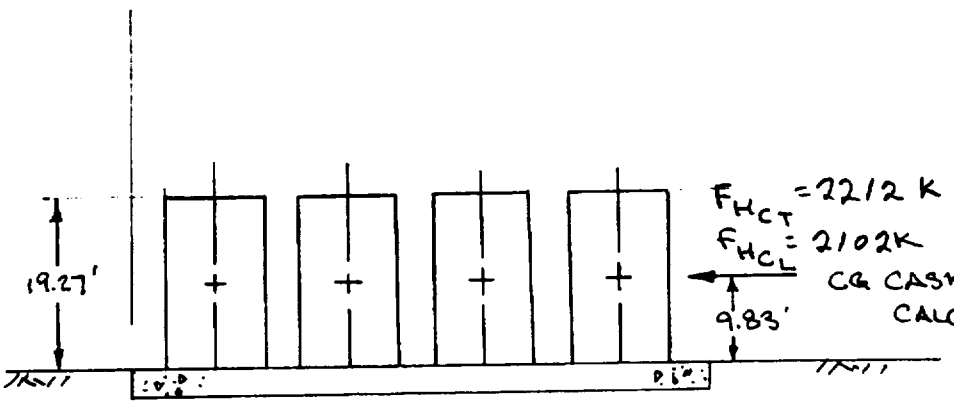

F_{HCT} = 2212 K E-W
F_{HCL} = 2102K N-S } p.B7

CG CASK (p C4 OF CALC 05996.01-G(B)-05-0)

~~00884~~

STONE & WEBSTER ENGINEERING CORPORATION

CALCULATION SHEET

▲ 5010 65

CALCULATION IDENTIFICATION NUMBER				PAGE 68
J.O. OR W.O. NO. 05996.02	DIVISION & GROUP G(8)	CALCULATION NO. 04-7	OPTIONAL TASK CODE	

DYN BEARING CAPACITY OF PAD: 8-CASK CASE

SOIL BEARING PRESSURES FROM TABLE 1

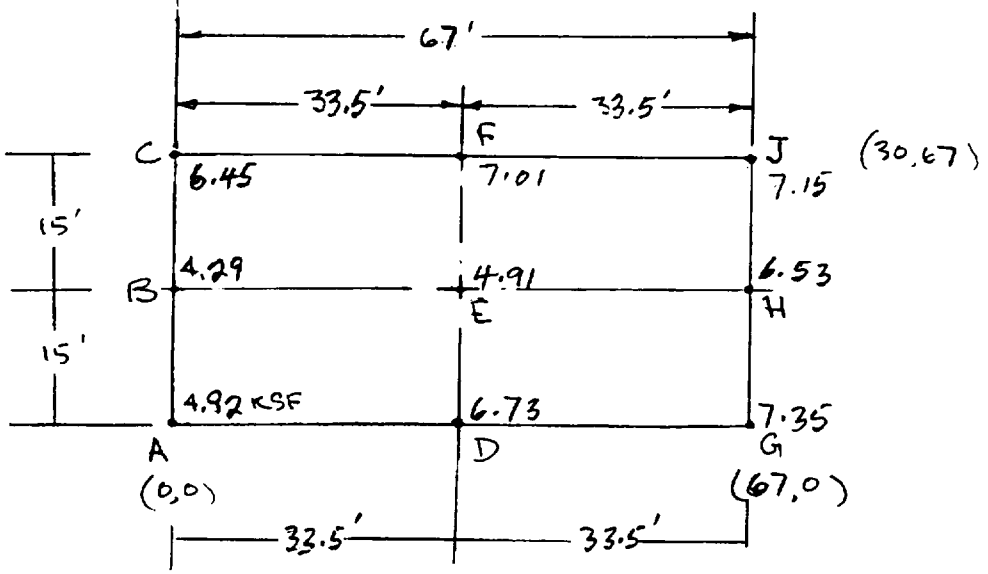

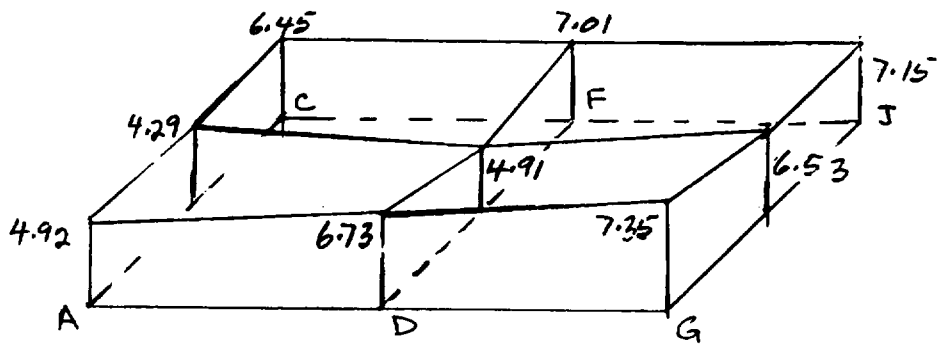

~~00885~~

DWN BEARING CAPACITY OF PAD: 8-CASK CASE

CALCULATE F_V:

ALONG LINE	AREA = K/FT	F_V (K/FT)	q_{AVG} (KSF)
AC	$\frac{15}{2}(4.92 + 2\times 4.29 + 6.45)$	= 149.63	4.99
DF	$\frac{15}{2}(6.73 + 2\times 4.91 + 7.01)$	= 176.70	5.89
GJ	$\frac{15}{2}(7.35 + 2\times 6.53 + 7.15)$	= 206.7	6.89

$$F_V \sim \frac{33.5}{2}(149.63 + 2\times 176.7 + 206.7) = \underline{11{,}888\ K}$$

ESTIMATE LOCATION WHERE F_V ACTS.
DETERMINE ECCENTRICITY OF F_V WRT B, $e_{B_{F_V}} = \frac{B}{2} - x$

ALONG LINE GJ, WHICH HAS THE GREATEST STRESSES

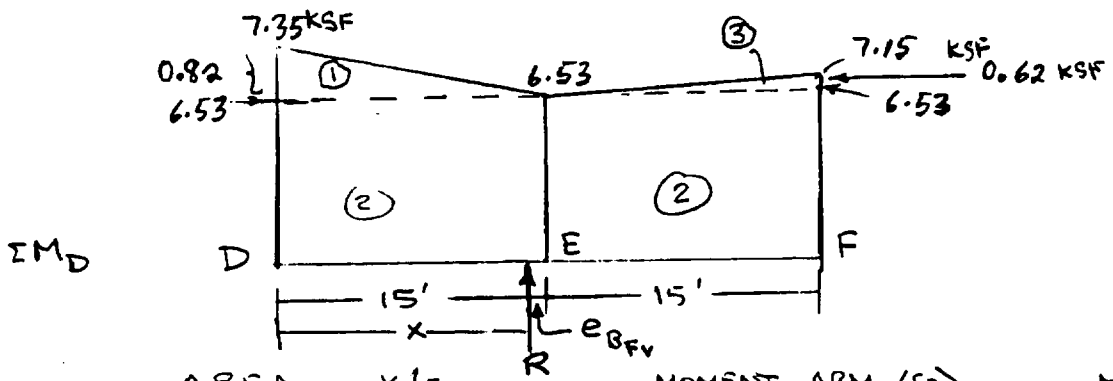

	AREA K/FT	MOMENT ARM (FT)	MOMENT K·FT/FT
①	$\frac{1}{2}0.82\,KSF \times 15'$ = 6.15	$\frac{1}{3}\times 15' = 5'$	30.75
②	$6.53\times 30'$ = 195.9	$\frac{1}{2}\times 30' = 15'$	2938.5
③	$\frac{1}{2}0.62\times 15'$ = 4.65	$15' + \frac{2}{3}\times 15' = 25'$	116.25
	R = Σ = 206.7		Rx = Σ = 3085.5

$$\therefore x = \frac{Rx}{R} = \frac{3085.5\ K\text{-}FT/FT}{206.7\ K/FT} = 14.92'$$

$$e_{B_{F_V}} = \frac{30}{2} - 14.92 = 0.08'$$

STONE & WEBSTER ENGINEERING CORPORATION

CALCULATION SHEET

▲ 50*0.65

CALCULATION IDENTIFICATION NUMBER				PAGE 70
J.O. OR W.O. NO. 05996.02	DIVISION & GROUP G(B)	CALCULATION NO. 04-7	OPTIONAL TASK CODE	

DYNAMIC BEARING CAPACITY OF PAD: 8-CASK CASE

DETERMINE ECCENTRICITY OF F_V WRT L, $e_{L_{F_V}} = \frac{L}{2} - y$

USE AVERAGE VALUES ALONG LINE AG, WHICH ARE GREATER THAN ALONG BH & CJ.

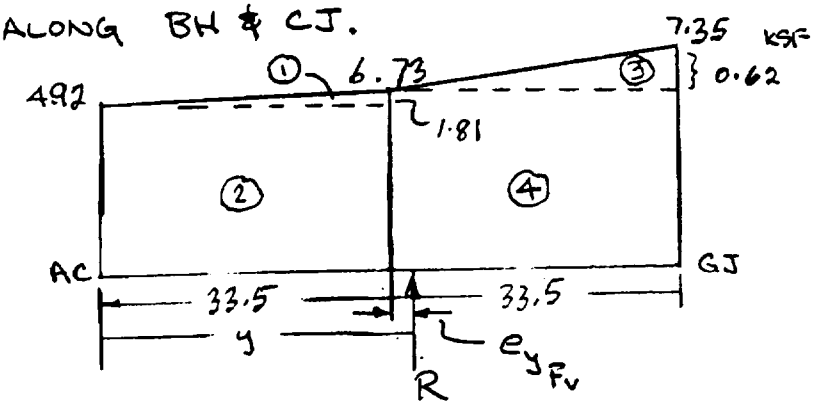

ΣM_{AC}

AREA	K/FT	MOMENT ARM FT	MOMENT K-FT/FT
①	$\frac{1}{2}(1.81\ KSF) \times 33.5 = 30.32$	$\frac{2}{3} \times 33.5 = 22.33'$	677.09
②	$4.92\ KSF \times 33.5 = 164.82$	$\frac{1}{2} \times 33.5 = 16.75'$	2,760.74
③	$\frac{1}{2}(7.35-6.73)^{KSF} \times 33.5' = 10.38$	$33.5' + \frac{2}{3}33.5 = 55.83'$	580.07
④	$6.73\ KSF \times 33.5' = 225.46$	$33.5' + \frac{1}{2}33.5 = 50.25'$	11,329.37
	$R = 430.98$ K/FT		$R_y = 15,347.3$ K-FT/FT

$$\therefore\ y = \frac{R_y}{R} = \frac{15,347.3\ K\text{-}FT/FT}{430.98\ K/FT} = 35.61'$$

$$e_{L_{F_V}} = y - \frac{L}{2} = 35.61' - \frac{67'}{2} = 2.11'$$

~~00887~~

STONE & WEBSTER ENGINEERING CORPORATION

CALCULATION SHEET

▲ 5010.65

CALCULATION IDENTIFICATION NUMBER				PAGE 71
J.O. OR W.O. NO.	DIVISION & GROUP	CALCULATION NO.	OPTIONAL TASK CODE	
05996.02	G(B)	04-7		

PLAN VIEW OF PAD SHOWING ~ LOCATION OF VERTICAL FORCE DUE TO VERTICAL STRESSES FROM STATIC AND DYNAMIC LOADS FOR 8-CASK LOADING CASE

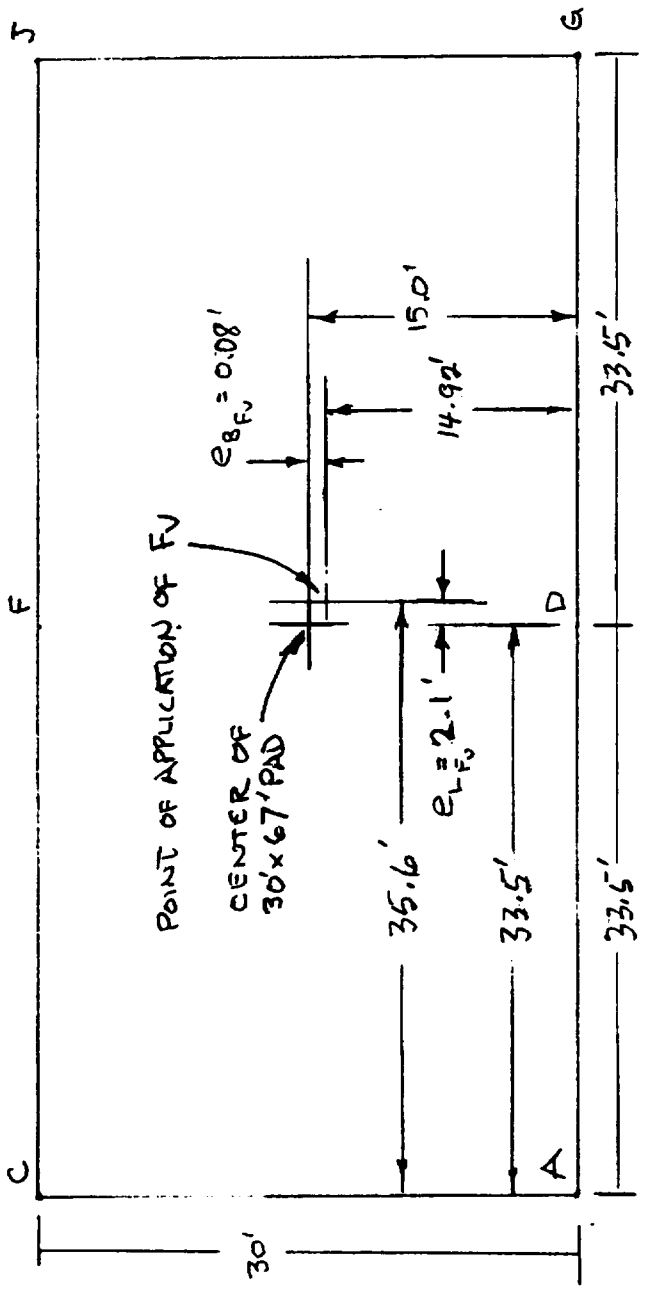

DYN BEARING CAPACITY OF PAD: 8-CASK CASE

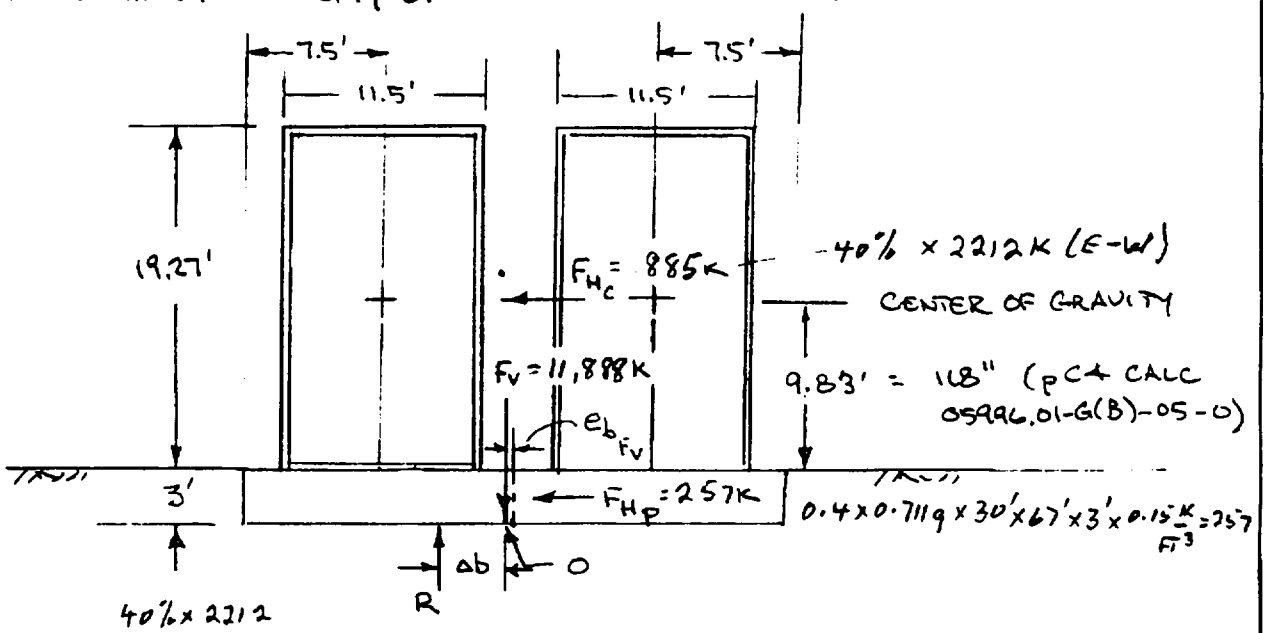

F_{H_C} = 885 K FOR 8-CASK CASE (p B7)
TRANVERSE DIRECTION E-W

$F_{H_P} = 0.4 \times .711\,a_h\,g \times 30' \times 67' \times 3' \times \frac{0.15\ KCF}{g} = 257\ K$

$\Sigma = EQ_{H\,E\text{-}W} = 1142\ K$

ΣM_o TO FIND LOCATION OF R TO RESIST MOMENT DUE TO F_H's

$R\,\Delta b = 1.5' \times 257\ K + (3' + 9.83')\ 885\ K$ (R = F_V; PAD; CASKS)

$\Delta b = \frac{386 + 11{,}355\ K\text{-}FT}{11{,}888\ K} = 0.99\ FT$

ADD $e_{b_{F_V}} = 0.08\ FT \Rightarrow e_b = 0.99 + 0.08 = 1.07\ FT$

$B' = B - 2e_b = 30' - 2 \times 1.07' = 27.86\ FT$

~~00889~~

DYN BEARING CAPACITY OF PAD: 8-CASK CASE

SIMILARLY FOR LONGITUDINAL DIRECTION

$F_{H_C} = 841$ K (40% of 2102K, ↑ p B7) ADD $F_{HP} = 257$ K $\Rightarrow EQ_{H_{N-S}} = 1098$ K

ΣM_o: $R = F_v$: $11{,}888\text{ K}\ \Delta\ell = 1.5' \times 257\text{ K}$ (PAD) $+ (3' + 9.83')(841\text{ K})$ (CASKS)

$$\Delta\ell = \frac{386 + 10{,}790\ \text{K-FT}}{11{,}888\ \text{K}} = 0.94'$$

ADD $e_{\ell_{F_v}} = 2.1$ FT $\Rightarrow e_\ell = 0.94' + 2.1' = 3.04'$

$$L' = L - 2e_\ell = 67' - 2 \times 3.04' = 60.92\ \text{FT}$$

$$q_{ACTUAL} = \frac{F_v}{B' \times L'} = \frac{11{,}888\ \text{K}}{27.86' \times 60.92} = 7.00\ \text{KSF}$$

CALC q_{ALLOW} FOR FS = 1.1 $B' = 27.86'$ $L' = 60.92'$

$F_v = 11{,}888$ K (STATIC + DYN 8 CASKS)

$EQ_{H\,E-W} = 257\text{ K}$ (F_{HP}) $+ 885\text{ K}$ (F_{HC}) $= 1142$ K

$EQ_{H\,N-S} = 257\text{ K} + 841\text{ K} = 1098$ K

$\gamma_{SURCH} = 100$ PCF $\gamma = 80$ PCF $D_f = 3'$

$\phi = 0°$ $C = 2.2$ KSF

6

~~00890~~

DYNAMIC BEARING CAPACITY OF THE CASK STORAGE PADS BASED ON MAXIMUM CASK DYNAMIC FORCES FROM THE SSI ANALYSIS

ALLOWABLE BEARING CAPACITY OF CASK STORAGE PADS WITH 8 CASKS

PSHA 2,000-Yr Earthquake: Case IV — **40 % N-S, 100 % Vert, 40 % E-W**

Soil Properties:

c =	**2,200**	Cohesion (psf)	
ϕ =	**0.0**	Friction Angle (degrees)	
γ =	**80**	Unit weight of soil (pcf)	
γ_{surch} =	**100**	Unit weight of surcharge (pcf)	

Foundation Properties:

B' =	**27.9**	Footing Width - ft (E-W)	L' = **60.9** Length - ft (N-S)
D_f =	**3.0**	Depth of Footing (ft)	
FS =	**1.1**	Factor of Safety required for $q_{allowable}$.	

F_V = **11,888** k (Includes EQ_V)

$EQ_{H\,E\text{-}W}$ = **1,142** k & $EQ_{H\,N\text{-}S}$ = **1,098** k → **1,584** k for F_H

$q_{ult} = c\,N_c\,s_c\,d_c\,i_c + \gamma_{surch}\,D_f\,N_q\,s_q\,d_q\,i_q + 1/2\,\gamma\,B\,N_\gamma\,s_\gamma\,d_\gamma\,i_\gamma$ — **General Bearing Capacity Equation, based on Winterkorn & Fang (1975)**

$N_c = (N_q - 1)\cot(\phi)$, but = 5.14 for $\phi = 0$	=	5.14	Eq 3.6 & Table 3.2
$N_q = e^{\pi \tan\phi} \tan^2(\pi/4 + \phi/2)$	=	1.00	Eq 3.6
$N_\gamma = 2\,(N_q + 1)\tan(\phi)$	=	0.00	Eq 3.8
$s_c = 1 + (B/L)(N_q/N_c)$	=	1.09	Table 3.2
$s_q = 1 + (B/L)\tan\phi$	=	1.00	"
$s_\gamma = 1 - 0.4\,(B/L)$	=	0.82	"
For $D_f/B \le 1$: $d_q = 1 + 2\tan\phi\,(1 - \sin\phi)^2\,D_f/B$	=	1.00	Eq 3.26
$d_\gamma = 1$	=	1.00	"
For $\phi > 0$: $d_c = d_q - (1-d_q)/(N_q\tan\phi)$	=	N/A	
For $\phi = 0$: $d_c = 1 + 0.4\,(D_f/B)$	=	1.04	Eq 3.27
$m_B = (2 + B/L)/(1 + B/L)$	=	1.69	Eq 3.18a
$m_L = (2 + L/B)/(1 + L/B)$	=	1.31	Eq 3.18b
If $EQ_{H\,N\text{-}S} > 0$: $\theta_n = \tan^{-1}(EQ_{H\,E\text{-}W}/EQ_{H\,N\text{-}S})$	=	0.81 rad	
$m_n = m_L\cos^2\theta_n + m_B\sin^2\theta_n$	=	1.51	Eq 3.18c
$i_q = \{1 - F_H/[(F_v + EQ_v) + B'\,L'\,c\cot\phi]\}^m$	=	1.00	Eq 3.14a
$i_\gamma = \{1 - F_H/[(F_v + EQ_v) + B'\,L'\,c\cot\phi]\}^{m+1}$	=	0.00	Eq 3.17a
For $\phi = 0$: $i_c = 1 - (m\,F_H/B'\,L'\,c\,N_c)$	=	0.88	Eq 3.16a

			N_c term		N_q term		N_γ term
Gross q_{ult} =	**11,546**	**psf =**	**11,246**	+	**300**	+	**0**
q_{all} =	**10,490**	**psf = q_{ult} / FS**					
q_{actual} =	**7,004**	**psf = $(F_v + EQ_v)/(B' \times L')$**					
FS_{actual} =	**1.65**	**= q_{ult}/q_{actual}**					**> 1.1 Hence OK**

Table 2.6-8 presents a summary of the bearing capacity analyses that were performed using the maximum dynamic cask driving forces developed for use in the design of the pads in Calculation 05996.02-G(PO17)-2 (CEC, 2001) for the pad supporting 2 casks, 4 casks, and 8 casks. Details of these analyses are presented on the preceding pages. These analyses are performed for Load Case IVA, where 40% of the horizontal forces due to the earthquake are applied in both the N-S and the E-W directions and 100% of the vertical force is applied to obtain the maximum vertical load on the cask storage pad. The width (30 ft) is less in the E-W direction than the length N-S (67 ft); therefore, the E-W direction is the critical direction with respect to a bearing capacity failure.

As indicated in this table, the gross allowable bearing pressure for the cask storage pads to obtain a factor of safety of 1.1 against a shear failure from static loads plus the very conservative maximum dynamic cask driving forces due to the design basis ground motion is at least 10.5 ksf for the 2-cask, 4-cask, and 8-cask loading cases. The minimum allowable value was obtained for the 8-cask loading case. The actual factor of safety for this case was 1.6, which is greater than the criterion for dynamic bearing capacity (FS ≥ 1.1).

CONCLUSIONS

Analyses presented herein demonstrate that the cask storage pads have adequate factors of safety against overturning, sliding, and bearing capacity failure for static and dynamic loadings due to the design basis ground motion. The following load cases are considered:

Case I Static

Case II Static + dynamic horizontal forces due to the earthquake

Case III Static + dynamic horizontal + vertical uplift forces due to the earthquake

Case IV Static + dynamic horizontal + vertical compression forces due to the earthquake

For Case II, 100% of the dynamic lateral forces in both the N-S and E-W directions are combined. For Cases III and IV, the effects of the three components of the design basis ground motion are combined in accordance with procedures described in ASCE (1986): i.e., 100% of the dynamic loading in one direction is assumed to act at the same time that 40% of the loading acts in the other two directions.

These results of these stability analyses are discussed in more detail in the following sections.

OVERTURNING STABILITY OF THE CASK STORAGE PADS

Analyses presented above indicate that the factor of safety against overturning due to dynamic loadings from the design basis ground motion is 5.6. This is greater than the criterion of 1.1 for the factor of safety against overturning due to dynamic loadings; therefore, the cask storage pads have an adequate factor of safety against overturning due to loadings from the design basis ground motion.

SLIDING STABILITY OF THE CASK STORAGE PADS

The cask storage pads will be constructed on and within soil cement, as described in Sections 2.6.1.7 and 2.6.4.11 of the SAR and as illustrated in Figure 4.2-7 of the SAR. Analyses presented above demonstrate that, using only the passive resistance of the soil cement above the bottom of the pads, the soil cement can be designed to provide sufficient resistance to sliding of the pads to readily achieve the minimum required factor of safety of 1.1. Thus, embedding the pads in soil cement will greatly enhance their resistance to sliding due to dynamic loads from the design basis ground motion. Additional analyses are included that demonstrate that sliding will not occur along deeper surfaces within the profile underlying the cask storage pads. First, the sliding resistance of the *in situ* silty clay/clayey silt layer is addressed to demonstrate that sliding will not occur along the interface between the bottom of the soil cement and those soils. These analyses demonstrate that if the pads were founded directly on the silty clay/clayey silt layer, the minimum factor of safety against sliding would be ~1.25. Therefore, the cask storage pads, embedded in soil cement, will have an adequate factor of safety against sliding.

Adequate factors of safety against sliding due to maximum forces from the design basis ground motion were obtained assuming that the storage pads were founded directly on the silty clay/clayey silt layer and conservatively ignoring the passive resistance of the soil cement that will be placed under and adjacent to the pads. In this case, much of the shearing resistance is provided by the cohesive portion of the shear strength of the silty clay/clayey silt layer, which is not affected by upward earthquake loads. As shown in SAR Figures 2.6-5, Pad Emplacement Area – Foundation Profiles, a layer, composed in part of sandy silt, underlies the clayey layer at a depth of about 10 ft below the cask storage pads. Sandy silts oftentimes are cohesionless; therefore, to be conservative, the sliding stability of the cask storage pads was analyzed assuming that the soils in this layer are cohesionless, ignoring the effects of cementation that were observed on many of the split-spoon and thin-walled tube samples obtained in the drilling programs.

Analyses were performed to address the possibility that sliding may occur along a deep slip plane at the clayey soil/sandy soil interface as a result of the earthquake forces. To simplify the analysis, it was assumed that cohesionless soils extend above the 10 ft depth and, thus, the pads are founded directly on cohesionless materials. Because of the magnitude of the peak ground accelerations (0.71g) due to the design basis ground motion at this site, the frictional resistance available for cohesionless soils when the normal stress is reduced due to the uplift from the inertial forces applicable for the vertical component of the design basis ground motion is not sufficient to resist sliding. However, analyses were performed to estimate the amount of displacement that might occur due to the design basis ground motion for this case. These analyses, based on the method of estimating displacements of dams and embankments during earthquakes developed by Newmark (1965), indicate that even if these soils are cohesionless and even if they are conservatively located directly at the base of the pads, the estimated displacements would be ~2.2 inches. Whereas there are no connections between the ground and these pads or between the pads and other structures, this minor amount of displacement would not adversely affect the performance of these structures if it did occur. Furthermore, the pads will be constructed on and within soil cement, which will be strong enough to resist sliding of the pads using only the passive resistance of the soil cement. This soil cement will effectively lock the pads in their respective locations, so that they can not move relative to one another.

ALLOWABLE BEARING CAPACITY OF THE CASK STORAGE PADS

STATIC BEARING CAPACITY OF THE CASK STORAGE PADS

Analyses of bearing capacity for static loads are summarized in Table 2.6-6. As indicated for Case IA, the factor of safety of the cask storage pad foundation is 7.0 using the undrained strength for the cohesive soils that was measured in the UU tests (s_u > 2.2 ksf) that were performed at depths of approximately 10 to 12 feet. The results for Case IB illustrates that the factor of safety against a bearing capacity failure increases to greater than 15 when the effective-stress strength of ϕ = 30° is used. The minimum gross allowable bearing capacity exceeds 4 ksf for static loads. Therefore, these analyses demonstrate that the factor of safety against a bearing capacity failure exceeds the minimum allowable value of 3 for static loads.

DYNAMIC BEARING CAPACITY OF THE CASK STORAGE PADS

Analyses of bearing capacity for dynamic loads are summarized in Tables 2.6-7 and 2.6-8. Table 2.6-7 presents the results of the bearing capacity analyses based on the inertial forces applicable for the peak ground accelerations from the design basis ground motion. Table 2.6-8 presents the results of the analyses based on the maximum dynamic cask driving forces developed for use in the design of the pads in Calculation 05996.02-G(PO17)-2 (CEC, 2001) for the pad supporting 2 casks, 4 casks, and 8 casks. These latter dynamic forces represent the maximum forces occurring at any time during the earthquake at each node in the model used to represent the cask storage pads. It is expected that these maximum forces will not occur at the same time for every node. These forces, therefore, represent an upper bound of the dynamic forces that could act at the base of the pad.

Table 2.6-7 presents the results of the dynamic bearing capacity analyses for the following cases, which include static loads plus inertial forces due to the earthquake.

Case II	100%	N-S direction,	0%	Vertical direction,	100%	E-W direction.
Case IIIA	40%	N-S direction,	-100%	Vertical direction,	40%	E-W direction.
Case IIIB	40%	N-S direction,	-40%	Vertical direction,	100%	E-W direction.
Case IIIC	100%	N-S direction,	-40%	Vertical direction,	40%	E-W direction.
Case IVA	40%	N-S direction,	100%	Vertical direction,	40%	E-W direction.
Case IVB	40%	N-S direction,	40%	Vertical direction,	100%	E-W direction.
Case IVC	100%	N-S direction,	40%	Vertical direction,	40%	E-W direction

As indicated in Table 2.6-7, the gross allowable bearing pressure for the cask storage pads to obtain a factor of safety of 1.1 against a shear failure from static loads plus the inertial loads due to the design basis ground motion exceeds ~4.8 ksf for all loading cases identified above. The minimum allowable value was obtained for Load Case IIIB, wherein 100% of the earthquake loads act in the E-W direction, 40% in the N-S direction, and 40%

in the vertical direction, tending to rotate the cask storage pad about the N-S axis. The actual factor of safety for this condition was ~1.2, which is greater than the criterion for dynamic bearing capacity (FS ≥ 1.1).

Table 2.6-8 presents a summary of the bearing capacity analyses that were performed using the maximum dynamic cask driving forces developed for use in the design of the pads in Calculation 05996.02-G(PO17)-2 (CEC, 2001) for the pad supporting 2 casks, 4 casks, and 8 casks. These analyses are performed for Load Case IVA, where 40% of the horizontal forces due to the earthquake are applied in both the N-S and the E-W directions and 100% of the vertical force is applied to obtain the maximum vertical load on the cask storage pad. The width (30 ft) is less in the E-W direction than the length N-S (67 ft); therefore, the E-W direction is the critical direction with respect to a bearing capacity failure.

As indicated in this table, the gross allowable bearing pressure for the cask storage pads to obtain a factor of safety of 1.1 against a shear failure from static loads plus the very conservative maximum dynamic cask driving forces due to the design basis ground motion is at least 10.5 ksf for the 2-cask, 4-cask, and 8-cask loading cases. The minimum allowable value was obtained for the 8-cask loading case. The actual factor of safety for this case was 1.6, which is greater than the criterion for dynamic bearing capacity (FS ≥ 1.1).

REFERENCES:

ASCE 4-86, *Seismic Analysis of Safety-Related Nuclear Structures and Commentary on Standard for Seismic Analysis of Safety-Related Nuclear Structures*, American Society of Civil Engineers, 1986.

ACI, 1998, "State-of-the Art Report on Soil Cement," reported by ACI Committee 230, ACI 230-1R-90 (Reapproved 1997), American Concrete Institute, Detroit, MI.

Bowles, J.E., 1996, Foundation Analysis and Design, 5th edition, The McGraw Hill Companies, New York, New York.

CEC, 2001, PFSF Calculation 05996.02-G(PO17)-2, Rev. 3, "Storage Pad Analysis and Design," prepared by International Civil Engineering Consultants, Inc, for Stone and Webster Engineering Corp, Denver, CO.

ConeTec, 1999, "Cone Penetration Testing Report, Private Fuel Storage Facility," prepared for Stone and Webster Engineering Corp, Denver, CO, 2 volumes.

GTG 6.15-1, "Geotechnical Division Technical Guideline on Determination of Lateral Pressures on Buried Structures in Granular Soils," Stone and Webster Engineering Corp, Boston, MA, 1982.

Geomatrix Consultants, Inc, 2001, "Development of Design Ground Motions for the Private Fuel Storage Facility, Skull Valley, UT," prepared for Stone and Webster Engineering Corp, Denver, CO, March.

Lambe, T.W., and R. V. Whitman, 1969, Soil Mechanics, John Wiley & Sons, Inc., N.Y., 553 pp.

Newmark, N. M., 1965, "Effects of Earthquakes on Dams and Embankments," *Fifth Rankine Lecture*, Geotechnique, Institution of Civil Engineers, London, 15(2), pp139-60.

Nussbaum, P. J., and Colley, B. E., 1971, "Dam Construction and Facing with Soil-Cement," Portland Cement Association, Publication RD010.01W.

Seed, H. B., and Whitman, R. V., 1970, "Design of Earth Retaining Structures for Dynamic Loads," ASCE Specialty Conference on Lateral Stresses in the Ground and the Design of Earth Retaining Structures, pp 103-147.

SWEC, 1982, Geotechnical Technical Guideline 6.15-1, "Determination of Lateral Pressures on Buried Structures in Granular Soils," Stone & Webster Engineering Corporation, Boston, MA.

SWEC, 2000a, Calculation No. 05996.02-G(B)-5, Revision 2, "Document Bases for Geotechnical Parameters Provided in Geotechnical Design Criteria," Stone & Webster Engineering Corporation, Boston, MA.

SWEC, 2000b, Calculation No. 05996.02-G(B)-13, Revision 2, "Stability Analyses of the Canister Transfer Building Supported on a Mat Foundation," Stone & Webster Engineering Corporation, Boston, MA.

Terzaghi, K., and Peck, R. B., 1967, Soil Mechanics in Engineering Practice, John Wiley & Sons, New York, NY, p 112.

Vesic, A. S., 1973, "Analysis of Ultimate Loads on Shallow Foundations," *Journal of the Soil Mechanics and Foundations Division*, ASCE, Vol 99, No. SM1, pp 45-73.

Winterkorn, H. F., and Fang, H., 1975, Foundation Engineering Handbook, Van Nostrand Reinhold Co., New York, NY,.

TABLE 1

Summary of Vertical Soil Bearing Pressures (ksf) from Calc 05996.02-G(PO17)-2, Rev. 3

Loading	Point	A (287)	B (293)	C (299)	D (144)	E (150)	F (156)	G (1)	H (7)	J (13)
2-Cask	Pad DL	0.45	0.45	0.45	0.45	0.45	0.45	0.45	0.45	0.45
	Snow LL	0.045	0.045	0.045	0.045	0.045	0.045	0.045	0.045	0.045
	Cask LL	1.345	1.352	1.345	0.185	0.199	0.185	0.00	0.00	0.00
	Pad EQ	0.313	0.313	0.313	0.313	0.313	0.313	0.313	0.313	0.313
	Cask EQ	4.11	3.90	3.18	0.84	0.52	0.56	0.00	0.00	0.00
	100% Vert	**6.26**	**6.06**	**5.33**	**1.83**	**1.53**	**1.55**	**0.81**	**0.81**	**0.81**
4-Cask	Pad DL	0.45	0.45	0.45	0.45	0.45	0.45	0.45	0.45	0.45
	Snow LL	0.045	0.045	0.045	0.045	0.045	0.045	0.045	0.045	0.045
	Cask LL	1.71	1.71	1.71	0.76	0.76	0.76	0.00	0.00	0.00
	Pad EQ	0.313	0.313	0.313	0.313	0.313	0.313	0.313	0.313	0.313
	Cask EQ	2.75	3.45	3.76	2.69	2.16	1.86	0.00	0.00	0.00
	100% Vert	**5.27**	**5.97**	**6.28**	**4.25**	**3.73**	**3.42**	**0.81**	**0.81**	**0.81**
8-Cask	Pad DL	0.45	0.45	0.45	0.45	0.45	0.45	0.45	0.45	0.45
	Snow LL	0.045	0.045	0.045	0.045	0.045	0.045	0.045	0.045	0.045
	Cask LL	1.402	1.402	1.402	1.514	1.516	1.514	1.402	1.402	1.402
	Pad EQ	0.313	0.313	0.313	0.313	0.313	0.313	0.313	0.313	0.313
	Cask EQ	2.71	2.08	4.24	4.41	2.59	4.69	5.14	4.32	4.94
	100% Vert	**4.92**	**4.29**	**6.45**	**6.73**	**4.91**	**7.01**	**7.35**	**6.53**	**7.15**

TABLE 2.6-6

SUMMARY - ALLOWABLE BEARING CAPACITY OF CASK STORAGE PADS

Based on Static Loads

Case	F_V	$EQ_{H\,N\text{-}S}$	$EQ_{H\,E\text{-}W}$	$\Sigma M_{@N\text{-}S}$	$\Sigma M_{@E\text{-}W}$	β_B $EQ_{H\,E\text{-}W}$	β_L $EQ_{H\,N\text{-}S}$	GROSS		e_B	e_L	EFFECTIVE			FS_{actual}
								q_{ult}	q_{all}			B'	L'	q_{actual}	
	k	k	k	ft-k	ft-k	deg	deg	ksf	ksf	ft	ft	ft	ft	ksf	
IA - Static Undrained Strength	3,757	0	0	0	0	0.0	0.0	13.08	**4.36**	0.0	0.0	30.0	67.0	**1.87**	**7.0**
IB - Static Effective Strength	3,757	0	0	0	0	0.0	0.0	29.22	**9.73**	0.0	0.0	30.0	67.0	**1.87**	**15.6**

ϕ = **30** Effective stress friction angle (deg), c=0.

c = **2,200** Undrained strength (psf), f=0.

γ = **80** Unit weight of soil (pcf)

B = **30** Footing width (ft)

L = **67** Footing length (ft)

D_f = **30.0** Depth of footing (ft)

γ_{surch} = **100** Unit weight of surcharge (pcf)

FS = **3** Factor of safety for static loads.

F_V = Vertical load (Static + EQ_V)

EQ_H = Earthquake: Horizontal force. $F_H = EQ_{H\,E\text{-}W}$ or $EQ_{H\,N\text{-}S}$

$\beta_B = \tan^{-1}[(EQ_{H\,E\text{-}W}) / F_V]$ = Angle of load inclination from vertical (deg) as f(

$\beta_L = \tan^{-1}[(EQ_{H\,N\text{-}S}) / F_V]$ = Angle of load inclination from vertical (deg) as f(l

$e_B = \Sigma M_{@N\text{-}S} / F_V$ $\quad e_L = \Sigma M_{@E\text{-}W} / F_V$

$B' = B - 2\,e_B$ $\quad L' = L - 2\,e_L$

$q_{actual} = F_V / (B' \times L')$

[geot]\05996\calc\bring_cap\Pad\Wint_Fang-7.xls Table 2.6-6

TABLE 2.6-7
SUMMARY - ALLOWABLE BEARING CAPACITY OF CASK STORAGE PADS
Based on Inertial Forces Due to Design Earthquake: PSHA 2,000-Yr Return Period

Case	F_V k	$EQ_{H\,N\text{-}S}$ k	$EQ_{H\,E\text{-}W}$ k	$\Sigma M_{@N\text{-}S}$ ft-k	$\Sigma M_{@E\text{-}W}$ ft-k	β_B $EQ_{H\,E\text{-}W}$ deg	β_L $EQ_{H\,N\text{-}S}$ deg	GROSS q_{ult} ksf	GROSS q_{all} ksf	e_B ft	e_L ft	EFFECTIVE B' ft	EFFECTIVE L' ft	EFFECTIVE q_{actual} ksf	FS_{actual}
II	3,757	2,671	2,671	26,982	26,982	35.4	35.4	5.34	**4.85**	7.2	7.2	15.6	52.6	**4.56**	1.2
IIIA	1,146	953	953	10,793	10,793	39.8	39.8	9.03	**8.21**	9.4	9.4	11.2	48.2	**2.13**	4.2
IIIB	2,712	1,068	2,291	26,982	10,793	40.2	21.5	5.26	**4.78**	9.9	4.0	10.1	59.0	**4.55**	1.2
IIIC	2,712	2,291	1,068	10,793	26,982	21.5	40.2	9.45	**8.59**	4.0	9.9	22.0	47.1	**2.61**	3.6
IVA	6,368	1,068	1,068	10,793	10,793	9.5	9.5	11.57	**10.51**	1.7	1.7	26.6	63.6	**3.76**	3.1
IVB	4,801	1,068	2,671	26,982	10,793	29.1	12.5	8.51	**7.73**	5.6	2.2	18.8	62.5	**4.09**	2.1
IVC	4,801	2,671	1,068	10,793	26,982	12.5	29.1	10.05	**9.13**	2.2	5.6	25.5	55.8	**3.38**	3.0

c = **2,200** Total stress cohesion (psf)

ϕ = **0.0** Total stress friction angle (deg)

B = **30** Footing width (ft)

L = **67** Footing length (ft)

D_f = **3.0** Depth of footing (ft)

γ = **80** Unit weight of soil (pcf)

γ_{surch} = **100** Unit weight of surcharge (pcf)

FS = **1.1** Factor of safety for dynamic loads.

F_V = Vertical load (Static + EQ_V)

EQ_H = Earthquake: Horizontal force. $F_H = EQ_{H\,E\text{-}W}$ or $EQ_{H\,N\text{-}S}$

$\beta_B = \tan^{-1}[(EQ_{H\,E\text{-}W}) / F_V]$ = Angle of load inclination from vertical (deg) as f(width).

$\beta_L = \tan^{-1}[(EQ_{H\,N\text{-}S}) / F_V]$ = Angle of load inclination from vertical (deg) as f(length).

$e_B = \Sigma M_{@N\text{-}S} / F_V$ $\quad$ $e_L = \Sigma M_{@E\text{-}W} / F_V$

$B' = B - 2\,e_B$ $\quad$ $L' = L - 2\,e_L$

$q_{actual} = F_V / (B' \times L')$

TABLE 2.6-8

SUMMARY - ALLOWABLE BEARING CAPACITY OF CASK STORAGE PADS

Based on Maximum Cask Driving Forces Due to Design Earthquake: PSHA 2,000-Yr Return Period for Loading Case IVA: 40% N-S, 100% Vertical, and 40% E-W

Case IV	F_V k	$EQ_{H\,N\text{-}S}$ k	$EQ_{H\,E\text{-}W}$ k	$\Sigma M_{@N\text{-}S}$ ft-k	$\Sigma M_{@E\text{-}W}$ ft-k	β_B $EQ_{H\,E\text{-}W}$ deg	β_L $EQ_{H\,N\text{-}S}$ deg	GROSS q_{ult} ksf	GROSS q_{all} ksf	e_B ft	e_L ft	EFFECTIVE B' ft	EFFECTIVE L' ft	EFFECTIVE q_{actual} ksf	FS_{actual}
2 Casks	3,790	429	506	6,443	16,183	7.6	6.5	12.42	**11.28**	1.70	4.27	25.0	26.6	**5.71**	2.2
4 Casks	6,380	688	791	10,526	33,620	7.1	6.2	11.88	**10.79**	1.65	5.27	26.7	39.7	**6.02**	2.0
8 Casks	11,888	1,098	1,142	12,720	36,140	5.5	5.3	11.55	**10.49**	1.07	3.04	27.9	60.9	**7.00**	1.6

c =	**2,200**	Undrained strength (psf)
ϕ =	**0.0**	Friction angle (deg)
B =	**30**	Footing width (ft)
L =	**Varies**	Footing length (ft)
D_f =	**3.0**	Depth of footing (ft)
γ =	**80**	Unit weight of soil (pcf)
γ_{surch} =	**100**	Unit weight of surcharge (pcf)
FS =	**1.1**	Factor of safety for dynamic loads.

F_V = Vertical load (Static + EQ_V)

EQ_H = Earthquake: Horizontal force. $F_H = EQ_{H\,E\text{-}W}$ or $EQ_{H\,N\text{-}S}$

$\beta_B = \tan^{-1}[(EQ_{H\,E\text{-}W}) / F_V]$ = Angle of load inclination from vertical (deg) as f(width).

$\beta_L = \tan^{-1}[(EQ_{H\,N\text{-}S}) / F_V]$ = Angle of load inclination from vertical (deg) as f(length).

$\Sigma M_{@N\text{-}S} = e_B \times F_V$ $\Sigma M_{@E\text{-}W} = e_L \times F_V$

$B' = B - 2\,e_B$ $L' = L - 2\,e_L$

$q_{actual} = F_V / (B' \times L')$

CALCULATION IDENTIFICATION NUMBER				PAGE 86
J.O. OR W.O. NO.	DIVISION & GROUP	CALCULATION NO.	OPTIONAL TASK CODE	
05996.02	G(B)	04 - 7		

FIGURE 1

FOUNDATION PLAN & PROFILE

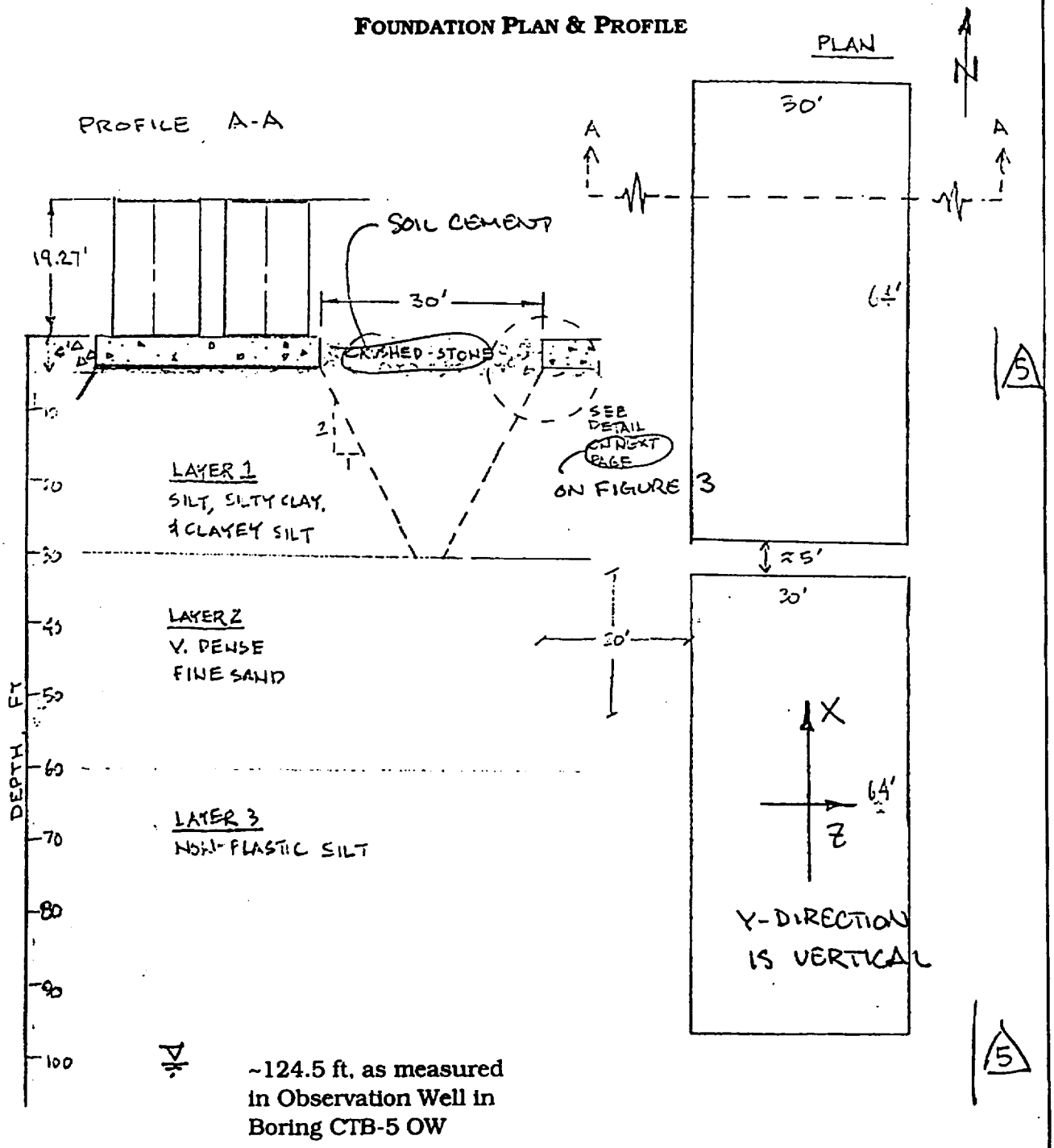

~124.5 ft, as measured in Observation Well in Boring CTB-5 OW

Note: Plan view of pad from SWEC Drawing 0599601-EY-2E.
Cask details from Attachment C of Calc 05996.02-G(B)-05-1.

CALCULATION IDENTIFICATION NUMBER				PAGE 87
J.O. OR W.O. NO.	DIVISION & GROUP	CALCULATION NO.	OPTIONAL TASK CODE	
05996.02	G(B)	04 - 7		

FIGURE 2

STATIC FOUNDATION LOAD / PRESSURE

Total Load

8 casks @ 356.5^k = 2852^K

30'×67'×3'×0.15^k/ft^3 = 904.5^k

∴ Total Load = 3756.5^k

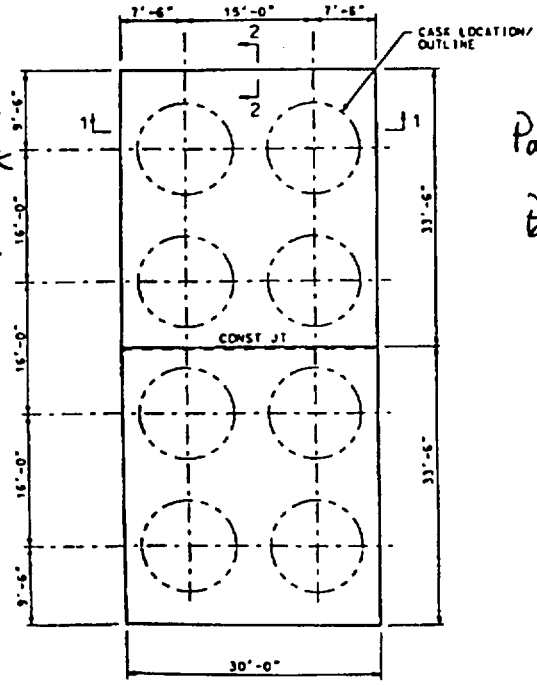

PLAN
CASK STORAGE PAD
(500 REQD)

Bearing Pressure:

P_{actual} = Load/Area

P_{actual} = 3756.5/30'×67'

P_{actual} = 1.87 KSF

Cask weight = 356.5K based on heaviest assembly weight shown on HI-STORM TSAR Table 3.2.1 (overpack with fully loaded MPC-32). See p C3 of Calc 05996.02-G(B)-05-1 for copy.

CALCULATION IDENTIFICATION NUMBER				PAGE 88
J.O. OR W.O. NO.	DIVISION & GROUP	CALCULATION NO.	OPTIONAL TASK CODE	
05996.02	G(B)	04 - 7		

FIGURE 3

DETAIL OF SOIL CEMENT UNDER & ADJACENT TO CASK STORAGE PADS

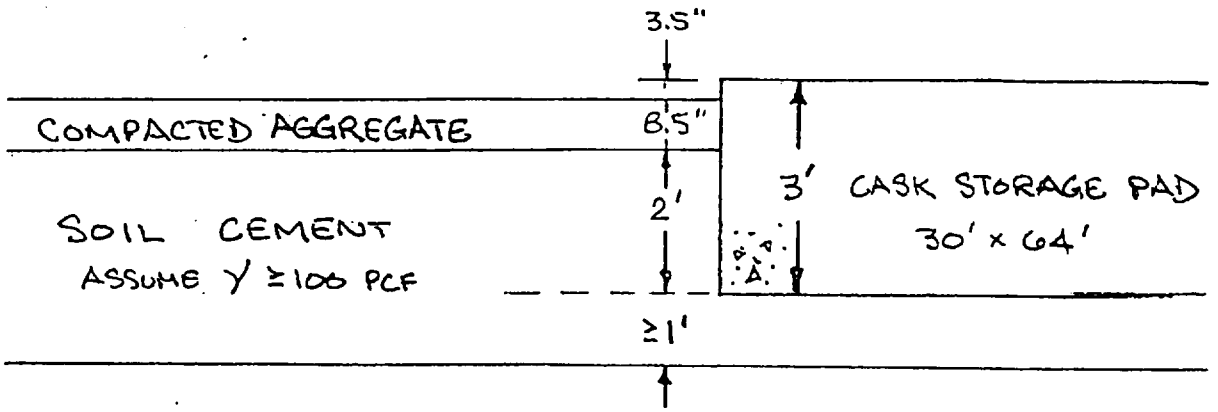

FIGURE 4

PASSIVE PRESSURE ACTING ON CASK STORAGE PADS

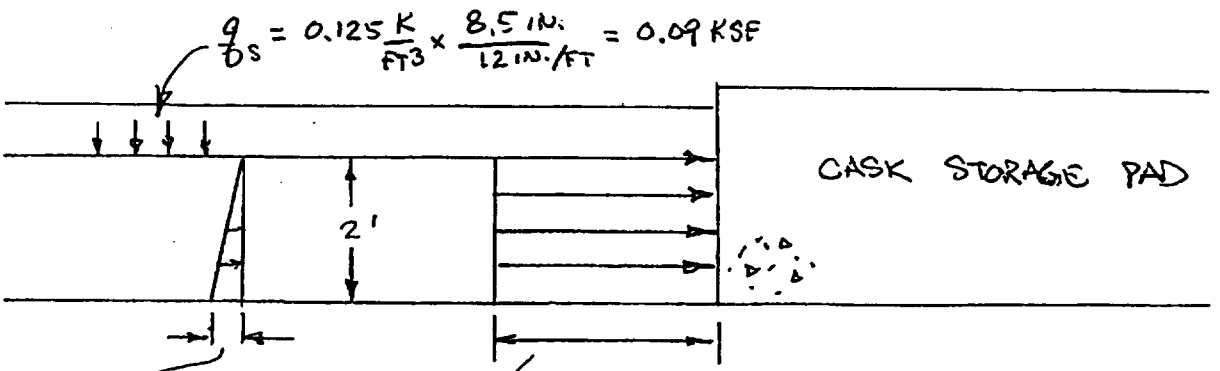

$p_p = \gamma H K_p$

$p_p = (2\bar{c} + q_{DS}) H \sqrt{K_p}$

$= (2\bar{c} + 0.09)\ KSF \times 2\ FT$ FOR $\phi = 0$, $K_p = 1.0$

CALCULATION IDENTIFICATION NUMBER				PAGE 89
J.O. OR W.O. NO.	DIVISION & GROUP	CALCULATION NO.	OPTIONAL TASK CODE	
05996.02	G(B)	04 - 7		

FIGURE 5

STANDARDIZED DISPLACEMENT FOR NORMALIZED EARTHQUAKES (SYMMETRICAL RESISTANCE)

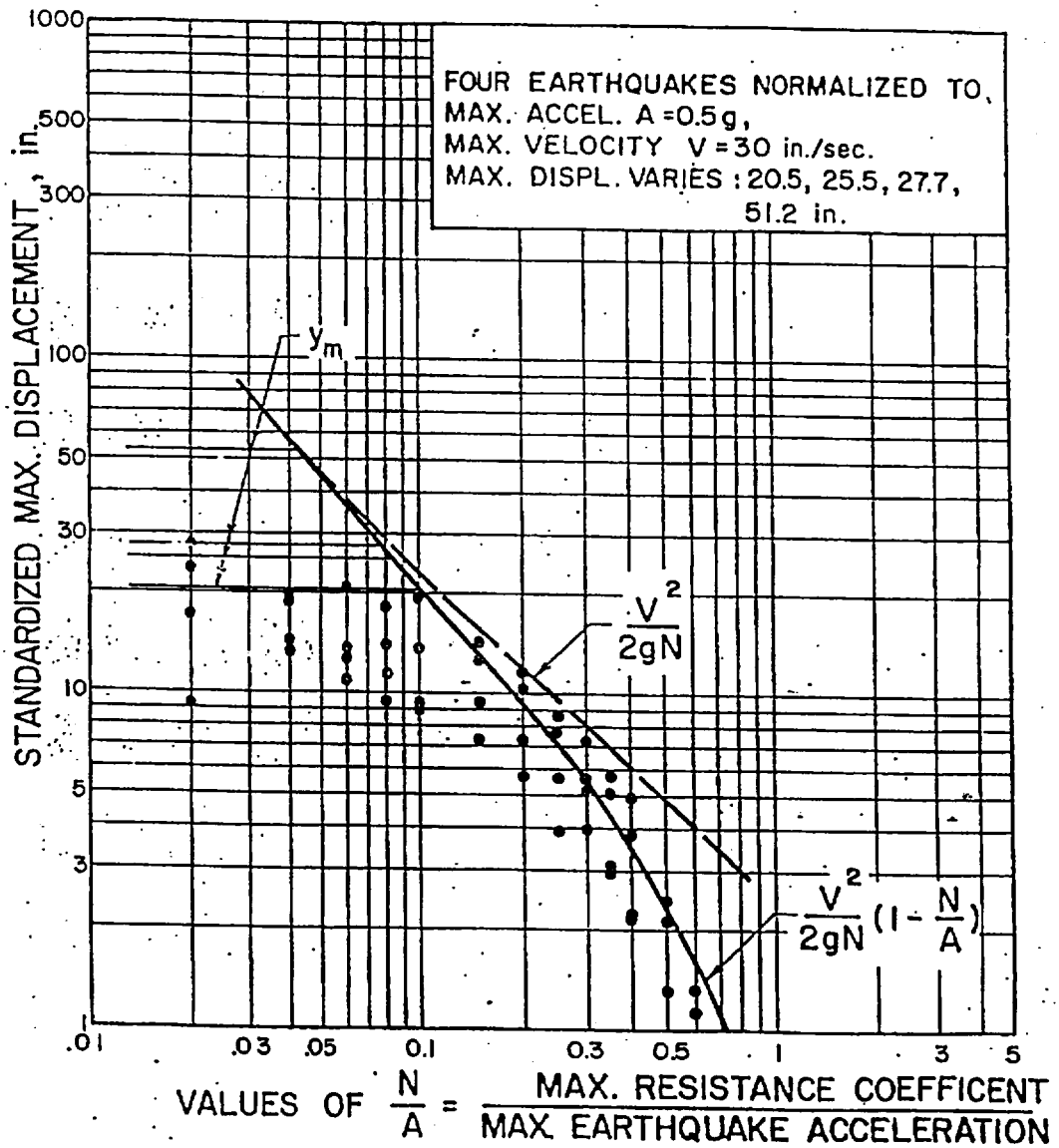

From Newmark (1965)

FIGURE 6

DETERMINATION OF MOMENTS ACTING ON PAD DUE TO EARTHQUAKE LOADS FROM CASKS

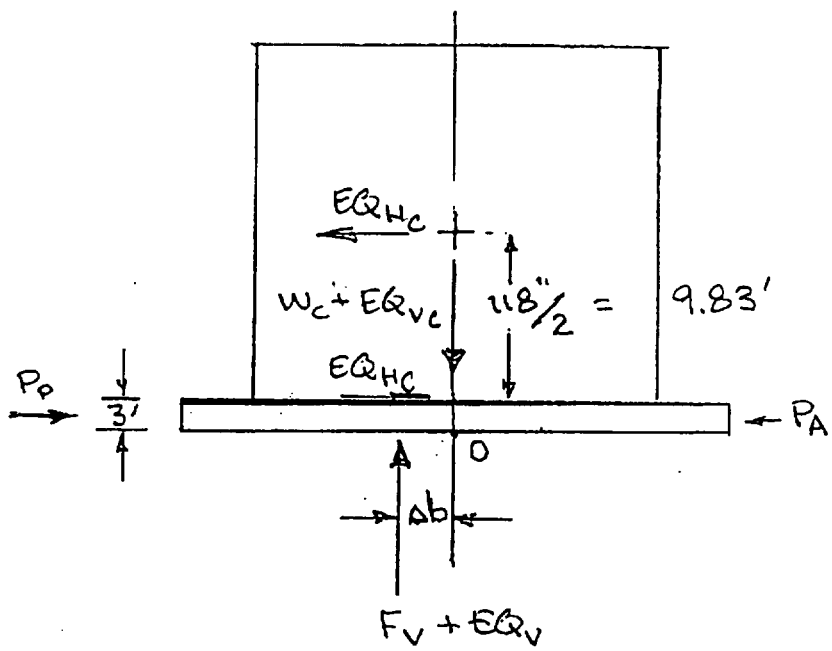

$P_A << P_P$; therefore, it's conservative to ignore both in ΣM.

Vertical reaction of cask load acts on the pad at an offset = Δb from the centerline of the cask.

$$\sum M_{@\,\text{centerline}} \text{ to find } \Delta b.$$

$$\Delta b \times (W_c + EQ_{VC}) = 9.83 \text{ ft} \times EQ_{HC}$$

$$\sum M_{@\,O} \text{ to find } \sum M_{@\,N\text{-}S}$$

$$\sum M_{@\,N\text{-}S} = \underbrace{1.5 \text{ ft} \times EQ_{HP}}_{\text{pad}} + \underbrace{3 \text{ ft} \times EQ_{HC}}_{\text{cask horiz}} + \underbrace{\Delta b \times (W_c + EQ_{VC})}_{\text{cask vert}}.$$

Note: Moment arm of 3 ft is used for determining moment due to cask horizontal force, because casks are only resting on the pads — No connection exists to transmit moment to the pad.

FIGURE 7

VERTICAL STRESSES UNDER CASK STORAGE PADS

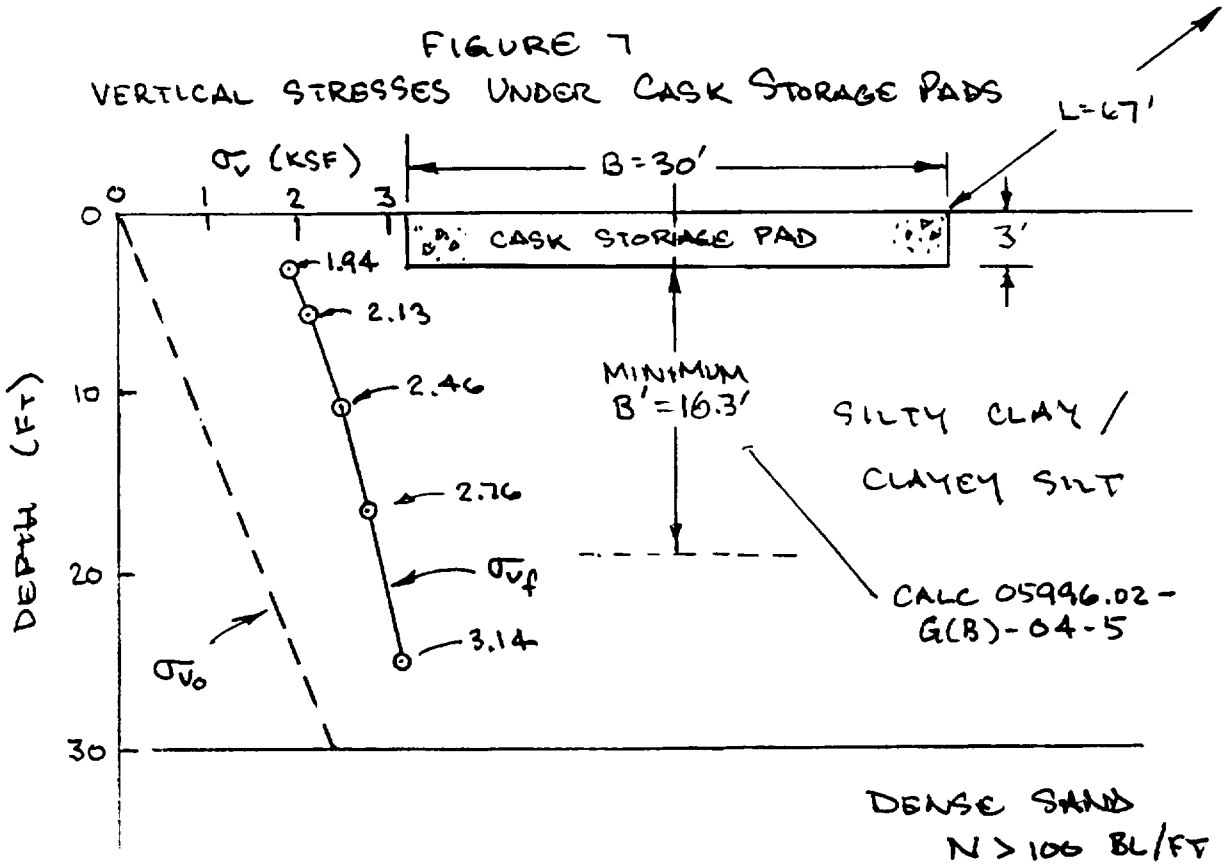

NOTE: AVG γ_m ~ 80 PCF FOR SOILS THAT WERE TESTED UNDER THE PAD EMPLACEMENT AREA, AS INDICATED ON p 4 OF CALC 05996.02-G(B)-05-1.

REF: CALC 05996.02-G(B)-03-3:

TABLE 3 ⇒ σ_{vf} AS $f(z)$

FIG 1 ⇒ σ_v AT BOTTOM OF 3' PAD = 1.935 KSF

FIG 7 ⇒ SUBLAYERS USED IN DET'G σ_v AS $f(z)$

ATTACHMENT A TO CALC 05996.02-G(B)-04-7 p A1/1

NOTES OF TELEPHONE CONVERSATION

JO No. 05996.01

PRIVATE FUEL STORAGE, LLC
PRIVATE FUEL STORAGE FACILITY

Date: 06-19-97
Time: 2:45 PM EDT

FROM:	Stan M. Macie	SWEC-Denver 1E		Tie Line 321-7305
	Wen Tseng	(ICEC)	Voice	(510) 841-7328
			(FAX)	(510) 841-7438
TO:	Paul J. Trudeau	SWEC-Boston 245/03		(617) 589-8473

SUBJECT: DYNAMIC BEARING CAPACITY OF PAD

DISCUSSION:

WTseng reported that his pad design analyses are being prepared for three loading cases: 2 casks, 4 casks, and 8 casks. The dynamic loads that he is using are based on the forcing time histories he received from Holtec. These forcing time histories were developed using a coefficient of friction between the cask and the pad of 0.2 and 0.8, where 0.2 provides the lower bound and 0.8 provides the upper bound loads from the cask to the pad.

He indicated that the bearing pressures at the base of the pad are greatest for the 2-cask dynamic loading case for $\mu = 0.8$ between the cask and the pad, because of eccentricity of the loading. For this case, the vertical pressures at the 30' wide loaded end of the pad are 5.77 ksf at one corner and 3.87 ksf at the other. He reported that it is reasonable to assume this pressure decreases linearly to 0 at a distance of ~32 ft; i.e., approximately half of the pad is loaded in this case. He also indicated that the horizontal pressure at the base of the pad is 1.04 ksf at the 30' wide end of the pad that is loaded by the 2 casks, and that this pressure decreases linearly over a distance of ~40' from the loaded end. He noted that the vertical pressures include the loadings (DL + dynamic loadings) of the casks and the pad, but the horizontal pressures apply only to the casks. Therefore, the inertia force of the whole pad must be added to the horizontal loads calculated based on the horizontal pressure distribution described above.

Since the table of allowable bearing pressures as a function of coefficient of friction between the cask and the pad that is in the design criteria does not include a value for $\mu = 0.8$, WTseng asked PJTrudeau to provide the allowable bearing pressure for this case.

ACTION ITEMS:

SUPERSEDED BY ATT B 3

PJTrudeau to determine the dynamic allowable bearing pressure for the 2-cask loading case.

COPY TO: NTGeorges Boston 245/03
SMMacie Denver 1E

~~00901~~

CALCULATION SHEET

			CALC. NO. G(PO17)-2	REV. NO.	3
ORIGINATOR	VL	DATE 3/27/01	CHECKED [illegible]	DATE	4-5-01
PROJECT	Private Fuel Storage Facility			JOB NO.	1101-000
SUBJECT	Storage Pad Analysis and Design			SHEET	227

5.3 Soil Pressures

5.3.1 Static Soil Pressure

Calculations of static soil pressure due to dead load (DL) and cask live load (LL) are given in Table S-1 and S-2, respectively.

CALCULATION SHEET

			CALC. NO.	G(PO17)-2	REV. NO. 3
ORIGINATOR	VV	DATE 3/27/01	CHECKED	[illegible]	DATE 4-5-01
PROJECT	Private Fuel Storage Facility				JOB NO. 1101-000
SUBJECT	Storage Pad Analysis and Design				SHEET 228

Table S-1
Maximum Vertical Displacements and Soil Bearing Pressures
Dead Load

	k_s = 2.75 kcf	k_s = 26.2 kcf
Z_w(ft) =	0.164	0.017
q_{zw}(ksf) =	0.45	0.45

Notes:
1. Z_w = maximum vertical displacement due to dead load (wt. of the pad only) obtained from CECSAP analysis results.
2. q_{zw} = vertical soil bearing pressure = k_s x Z_w, where k_s = subgrade modulus=2.75 and 26.2 kcf for lower-bound and upper-bound soils,respectively.

CALCULATION SHEET

			CALC. NO. G(PO17)-2	REV. NO.	3
ORIGINATOR		DATE 3/27/01	CHECKED	DATE	4-5-01
PROJECT	Private Fuel Storage Facility			JOB NO.	1101-000
SUBJECT	Storage Pad Analysis and Design			SHEET	229

Table S-2
Maximum Vertical Displacements and Soil Bearing Pressures
Live Load

Node No.	(Z_i)max ($\times 10^{-2}$ ft.)							
	subgrade modulus = 2.75 kcf				subgrade modulus = 26.2 kcf			
	2 Casks	4 Casks	8 Casks	7 Casks + OLT	2 Casks	4 Casks	8 Casks	7 Casks + OLT
1	13.06	11.29	-50.97	-57.81	0.61	1.16	-4.83	-5.30
7	13.02	11.28	-50.97	-41.84	0.59	1.14	-4.84	-4.42
13	13.06	11.29	-50.97	-25.83	0.61	1.16	-4.83	-3.50
144	-11.82	-26.36	-52.73	-78.21	-0.70	-2.89	-5.78	-7.95
150	-11.93	-26.35	-52.71	-61.06	-0.76	-2.89	-5.79	-6.31
156	-11.82	-26.36	-52.71	-43.87	-0.70	-2.89	-5.78	-4.65
287	-42.54	-62.26	-50.97	-100.20	-5.13	-5.98	-4.83	-11.81
293	-42.59	-62.25	-50.97	-80.88	-5.16	-5.98	-4.84	-8.48
299	-42.54	-62.26	-50.97	-61.84	-5.13	-5.98	-4.83	-5.47
	Maximum Soil Bearing Pressure q_{zi}(1) (ksf)							
1	0	0	-1.402	-1.590	0	0	-1.264	-1.390
7	0	0	-1.402	-1.151	0	0	-1.267	-1.159
13	0	0	-1.402	-0.710	0	0	-1.264	-0.917
144	-0.325	-0.725	-1.450	-2.151	-0.185	-0.757	-1.514	-2.082
150	-0.328	-0.725	-1.450	-1.679	-0.199	-0.758	-1.516	-1.653
156	-0.325	-0.725	-1.450	-1.206	-0.185	-0.757	-1.514	-1.219
287	-1.170	-1.712	-1.402	-2.756	-1.345	-1.567	-1.264	-3.094
293	-1.171	-1.712	-1.402	-2.224	-1.352	-1.565	-1.267	-2.222
299	-1.170	-1.712	-1.402	-1.701	-1.345	-1.567	-1.264	-1.434

Notes:
1. $q_{zi} = k_s \times Z_i$ where k_s = 2.75 and 26.2 kcf for lower-bound and upper-bound subgrade moduli, respectively, and Z_i are obtained from CECSAP analysis results (Att. A)
2. Negative displacements imply downward movements.
3. The locations of nodes listed are shown in Figure 5.1-1.
4. For snow load, the soil bearing pressures is .045 ksf (Ref. 11).

CALCULATION SHEET

ORIGINATOR	KW	DATE 3/28/01	CALC. NO. G(PO17)-2	REV. NO.	3
PROJECT	Private Fuel Storage Facility		CHECKED	DATE	4-5-01
SUBJECT	Storage Pad Analysis and Design			JOB NO.	1101-000
				SHEET	230

5.3.2 Dynamic Horizontal and Vertical Soil Pressures

Calculations of lateral and vertical soil pressures due to dynamic cask loadings resulting from 2000-year event earthquake are given in the following tables:

Table D-1(a) shows calculation of horizontal dynamic soil pressures in the X-direction (short direction of pad).

Table D-1(b) shows calculation of horizontal dynamic soil pressures in the Y-direction (long direction of pad).

Table D-1(c) shows a summary of averaged horizontal dynamic soil reactions.

Table D-1(d) shows calculation of vertical dynamic soil pressures.

CALCULATION SHEET

			CALC. NO. G(PO17)-2	REV. NO.	3
ORIGINATOR	KV	DATE 3/28/01	CHECKED	DATE	4-5-01
PROJECT	Private Fuel Storage Facility			JOB NO.	1101-000
SUBJECT	Storage Pad Analysis and Design			SHEET	231

Table D-1(a)
Averaged Maximum Horizontal Soil Reactions in the X Direction
Dynamic Load

Node No.	Maximum Displacement Xd ($x10^{-3}$ ft.)								
	LB			BE			UB		
	2 Casks	4 Casks	8 Casks	2 Casks	4 Casks	8 Casks	2 Casks	4 Casks	8 Casks
1	3.512	2.409	17.160	1.624	1.177	9.076	0.798	0.547	3.597
7	3.515	2.405	17.180	1.625	1.170	9.085	0.801	0.552	3.625
13	3.512	2.409	17.190	1.624	1.177	9.060	0.799	0.550	3.618
144	4.461	9.712	17.460	2.021	4.241	9.127	1.017	2.325	3.952
150	4.461	9.729	17.470	2.021	4.242	9.156	0.999	2.294	3.951
156	4.467	9.733	17.470	2.029	4.244	9.171	0.982	2.272	3.947
287	12.800	21.490	17.510	6.201	9.504	8.860	3.345	5.306	4.514
293	12.800	21.490	17.530	6.186	9.512	8.886	3.360	5.341	4.566
299	12.800	21.470	17.530	6.173	9.516	8.886	3.381	5.349	4.565
Avg =	6.925	11.205	17.389	3.278	4.976	9.034	1.720	2.726	4.037
Kxd =	1.14E+05	1.14E+05	1.14E+05	2.33E+05	2.33E+05	2.33E+05	5.48E+05	5.48E+05	5.48E+05
Qxd =	789	1277	1982	764	1159	2105	943	1494	2212

Notes:
1. Avg = {sum $(Xd)_i$}/N; Xd = max. x-displ.; i = nodes 1, 7, 13, 144, 150, 156, 287, 293, 299; and N = 9.
2. Qxd = Kxd x Avg = averaged maximum horizontal-x soil reaction in Kips due to dynamic loading.
3. Kxd for LB, BE, and UB soils are dynamic horizontal-x soil spring stiffnesses given below:

(Kxd)LB = 9.51E+06 lb/in, 1.14E+05 Kips/ft (Kxd)BE = 1.94E+07 lb/in, 2.33E+05 Kips/ft (Kxd)UB = 4.57E+07 lb/in, 5.48E+05 Kips/ft

4. LB = lower-bound soil, BE = best-estimate soil, UB = upper-bound soil.
5. Xd are obtained from CECSAP analysis results given in Att. A.

CALCULATION SHEET

			CALC. NO.	G(PO17)-2	REV. NO. 3
ORIGINATOR		DATE 3/28/01	CHECKED		DATE 4-5-01
PROJECT	Private Fuel Storage Facility				JOB NO. 1101-000
SUBJECT	Storage Pad Analysis and Design				SHEET 232

Table D-1(b)
Averaged Maximum Horizontal Soil Reactions in the Y Direction
Dynamic Load

Node No.	Max. Displacement Yd ($x10^{-3}$ ft.)								
	LB			BE			UB		
	2 Casks	4 Casks	8 Casks	2 Casks	4 Casks	8 Casks	2 Casks	4 Casks	8 Casks
1	5.107	8.657	13.550	2.194	4.059	8.393	1.413	2.578	3.979
7	3.916	7.318	14.030	2.055	4.313	8.173	1.195	1.962	4.056
13	4.303	7.097	14.510	2.567	4.664	7.937	1.337	2.161	4.109
144	5.231	8.763	13.450	2.332	4.187	8.430	1.513	2.714	3.975
150	3.946	7.447	13.960	2.122	4.429	8.132	1.267	2.133	4.042
156	4.379	7.207	14.450	2.690	4.767	7.834	1.442	2.301	4.121
287	5.389	8.870	27.260	2.449	4.357	8.396	1.651	2.821	3.926
293	4.016	7.584	13.840	2.253	4.556	8.048	1.464	2.380	4.013
299	4.476	7.253	14.370	2.877	4.846	7.795	1.657	2.334	4.097
Avg =	4.529	7.800	15.491	2.393	4.464	8.126	1.438	2.376	4.035
Kyd =	1.08E+05	1.08E+05	1.08E+05	2.21E+05	2.21E+05	2.21E+05	5.21E+05	5.21E+05	5.21E+05
Qyd =	491	846	1680	528	986	1794	749	1237	2102

Notes:
1. Avg = {sum (Yd)i}/N; Yd = max. y-displ.; i = nodes 1, 7, 13, 144, 150, 156, 287, 293, 299; and N = 9.
2. Qyd = Kyd x Avg = averaged maximum horizontal-y soil reaction in Kips due to dynamic loading.
3. Kyd for LB, BE, and UB soils are dynamic horizontal-y soil spring stiffnesses given below:

(Kyd)LB = 9.04E+06 lb/in, 1.08E+05 Kips/ft (Kyd)BE = 1.84E+07 lb/in, 2.21E+05 Kips/ft (Kyd)UB = 4.34E+07 lb/in, 5.21E+05 Kips/ft

4. LB = lower-bound soil, BE = best-estimate soil, UB = upper-bound soil.
5. Yd are obtained from CECSAP analysis results given in Att. A.

CALCULATION SHEET

ORIGINATOR	KW	DATE 3/28/01	CALC. NO. G(PO17)-2	REV. NO. 3	
			CHECKED [illegible]	DATE 4-5-01	
PROJECT	Private Fuel Storage Facility			JOB NO. 1101-000	
SUBJECT	Storage Pad Analysis and Design			SHEET 273	

Table D-1(c)
Summary of Total Maximum Horizontal Soil Reactions
Dynamic Load

	Max. Soil Reaction (Kips)									
	LB			BE			UB			
	2 Casks	4 Casks	8 Casks	2 Casks	4 Casks	8 Casks	2 Casks	4 Casks	8 Casks	
Qxd =	789	1277	1982	764	1159	2105	943	1494	2212	E-W
Qyd =	491	846	1680	528	986	1794	749	1237	2102	N-S

Notes:
1. Qxd, and Qyd shown are obtained from Tables D-1(a), and (b), respectively.
2. LB = lower-bound soil, BE = best-estimate soil, UB = upper-bound soil.

CALCULATION SHEET

			CALC. NO.	G(PO17)-2	REV. NO. 3
ORIGINATOR		DATE 3/28/01	CHECKED		DATE 4-5-01
PROJECT	Private Fuel Storage Facility				JOB NO. 1101-000
SUBJECT	Storage Pad Analysis and Design				SHEET 234

Table D-1(d)
Maximum Vertical Soil Bearing Pressures
Dynamic Load

Node No.	Maximum Displacement Zd ($x10^{-3}$ ft.)								
	LB			BE			UB		
	2 Casks	4 Casks	8 Casks	2 Casks	4 Casks	8 Casks	2 Casks	4 Casks	8 Casks
1	4.051	9.396	-31.02	1.806	4.158	-23.66	0.406	1.654	-15.92
7	3.900	7.973	-24.23	1.964	3.648	-21.18	0.439	1.024	-13.36
13	4.788	11.470	-31.22	2.115	4.636	-17.88	0.528	1.560	-15.31
144	-9.195	-22.58	-34.05	-5.939	-16.84	-22.66	-1.861	-8.34	-13.66
150	-5.063	-15.2	-12.71	-3.683	-11.13	-12.39	-1.332	-6.698	-8.016
156	-6.565	-15.9	-32.24	-2.988	-9.447	-18.42	-1.734	-5.773	-14.53
287	-29.18	-24.39	-17.51	-14.54	-15.67	-18.88	-12.72	-8.52	-8.38
293	-15.57	-16.97	-19.21	-9.019	-12.42	-12.22	-12.08	-10.68	-6.446
299	-21.85	-26.09	-28.04	-12.87	-16.35	-17.02	-9.835	-11.63	-13.12
	Maximum Soil Bearing Pressure q_{zd} (Kips/ft^2)								
1	0	0	-2.22	0	0	-3.35	0	0	-5.14
7	0	0	-1.74	0	0	-3.00	0	0	-4.32
13	0	0	-2.24	0	0	-2.53	0	0	-4.94
144	-0.66	-1.62	-2.44	-0.84	-2.38	-3.21	-0.60	-2.69	-4.41
150	-0.36	-1.09	-0.91	-0.52	-1.57	-1.75	-0.43	-2.16	-2.59
156	-0.47	-1.14	-2.31	-0.42	-1.34	-2.61	-0.56	-1.86	-4.69
287	-2.09	-1.75	-1.25	-2.06	-2.22	-2.67	-4.11	-2.75	-2.71
293	-1.12	-1.22	-1.38	-1.28	-1.76	-1.73	-3.90	-3.45	-2.08
299	-1.57	-1.87	-2.01	-1.82	-2.31	-2.41	-3.18	-3.76	-4.24

Notes:

1. q_{zd} = maximum soil bearing pressure = (Kzd x Z_d)/A, where A = 67' x 30' = 2010 ft^2.
2. Kzd for LB, BE, and UB soils are vertical-z dynamic soil spring stiffnesses given below:

(Kzd)LB = 1.20E+07 lb/in (Kzd)BE = 2.37E+07 lb/in (Kzd)UB = 5.41E+07 lb/in
1.44.E+05 Kips/ft 2.84.E+05 Kips/ft 6.49.E+05 Kips/ft

3. LB = lower-bound soil, BE = best-estimate soil, UB = upper-bound soil.
4. Zd are obtained from CECSAP analysis results given in Att. A.
5. Negative displacements imply downward movements.
6. The maximum values of Zd shown may not be concurrent. However, they are assumed to be concurrent values and concurrent signs are assigned to them.
7. Node numbers are shown in Figure 5.1-1.

6.2 Vertical Soil Bearing Pressures and Horizontal Soil Shear Stresses

Vertical soil bearing pressures for individual loadings and combined loadings are Summarized in Table 4.

Horizontal soil shear stresses are shown in Tables D-1(a) and (b), and the total horizontal soil reactions (shear forces) in both the short (x) and long (y) directions of the pad are summarized in Table D-1(c).

CALCULATION SHEET

			CALC. NO.	G(PO17)-2	REV. NO. 3
ORIGINATOR	KW	DATE 3/27/01	CHECKED	[illegible]	DATE 4-05-01
PROJECT	Private Fuel Storage Facility				JOB NO. 1101-000
SUBJECT	Storage Pad Analysis and Design				SHEET 276

Table 4
Summary of Vertical Soil Bearing Pressures (ksf)

		A	B	C	D	E	F	G	H	J
Loading	Point	287	293	299	144	150	156	1	7	13
2 - Cask	Pad DL	0.45	0.45	0.45	0.45	0.45	0.45	0.45	0.45	0.45
	Snow LL	0.045	0.045	0.045	0.045	0.045	0.045	0.045	0.045	0.045
	Cask LL	1.345	1.352	1.345	0.185	0.199	0.185	0	0	0
	Pad EQ	0.313	0.313	0.313	0.313	0.313	0.313	0.313	0.313	0.313
	Cask EQ	4.11	3.9	3.18	0.84	0.52	0.56	0	0	0
	100% Vert	6.26	6.06	5.33	1.83	1.53	1.55	0.81	0.81	0.81
4-Cask	Pad DL	0.45	0.45	0.45	0.45	0.45	0.45	0.45	0.45	0.45
	Snow LL	0.045	0.045	0.045	0.045	0.045	0.045	0.045	0.045	0.045
	Cask LL	1.712	1.712	1.712	0.757	0.758	0.757	0	0	0
	Pad EQ	0.313	0.313	0.313	0.313	0.313	0.313	0.313	0.313	0.313
	Cask EQ	2.75	3.45	3.76	2.69	2.16	1.86	0	0	0
	100% Vert	5.27	5.97	6.28	4.25	3.73	3.42	0.81	0.81	0.81
8-Cask	Pad DL	0.45	0.45	0.45	0.45	0.45	0.45	0.45	0.45	0.45
	Snow LL	0.045	0.045	0.045	0.045	0.045	0.045	0.045	0.045	0.045
	Cask LL	1.402	1.402	1.402	1.514	1.516	1.514	1.402	1.402	1.402
	Pad EQ	0.313	0.313	0.313	0.313	0.313	0.313	0.313	0.313	0.313
	Cask EQ	2.71	2.08	4.24	4.41	2.59	4.69	5.14	4.32	4.94
	100% Vert	4.92	4.29	6.45	6.73	4.91	7.01	7.35	6.53	7.15

Notes:
1. Values for Pad DL are obtained from Table S-1.
2. Values for snow LL are obtained from Table S-2.
3. Values for Cask LL are obtained from Table S-2.
4. Pad EQ pressure = (pad wt.)xa_v, where pad wt.=904.5 kips, and a_v=.695g.
5. Values for Cask EQ are obtained from Table D-1(d).
6. EQ pressures listed are the envelopes of results for all soil conditions.
7. Node numbers are shown in Figure 5.1-1.

CALCULATION SHEET

CALC. NO. G(PO17)-2 REV. NO. 3
ORIGINATOR KL DATE 3/14/01 CHECKED AMM DATE 3/30/01
PROJECT Private Fuel Storage Facility JOB NO. 1101-000
SUBJECT Storage Pad Analysis and Design SHEET NO 20

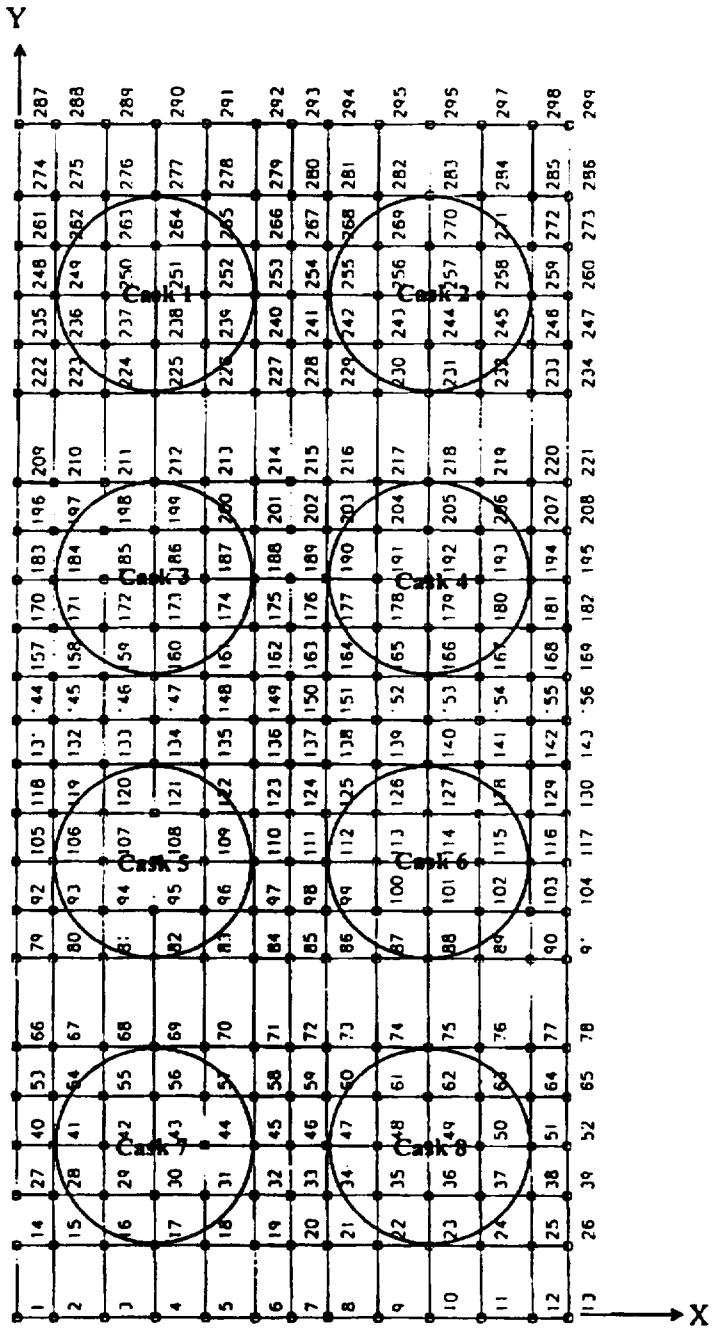

Figure 5.1-1 CECSAP Finite-Element Model with Node Numbers

CALCULATION SHEET

CEC

ORIGINATOR KW DATE 3/14/01 CALC NO. G(PO17)-2 REV. NO. 3
CHECKED AMM DATE 3/20/01
PROJECT Private Fuel Storage Facility JOB NO. 1101-000
SUBJECT Storage Pad Analysis and Design SHEET NO. 2.1

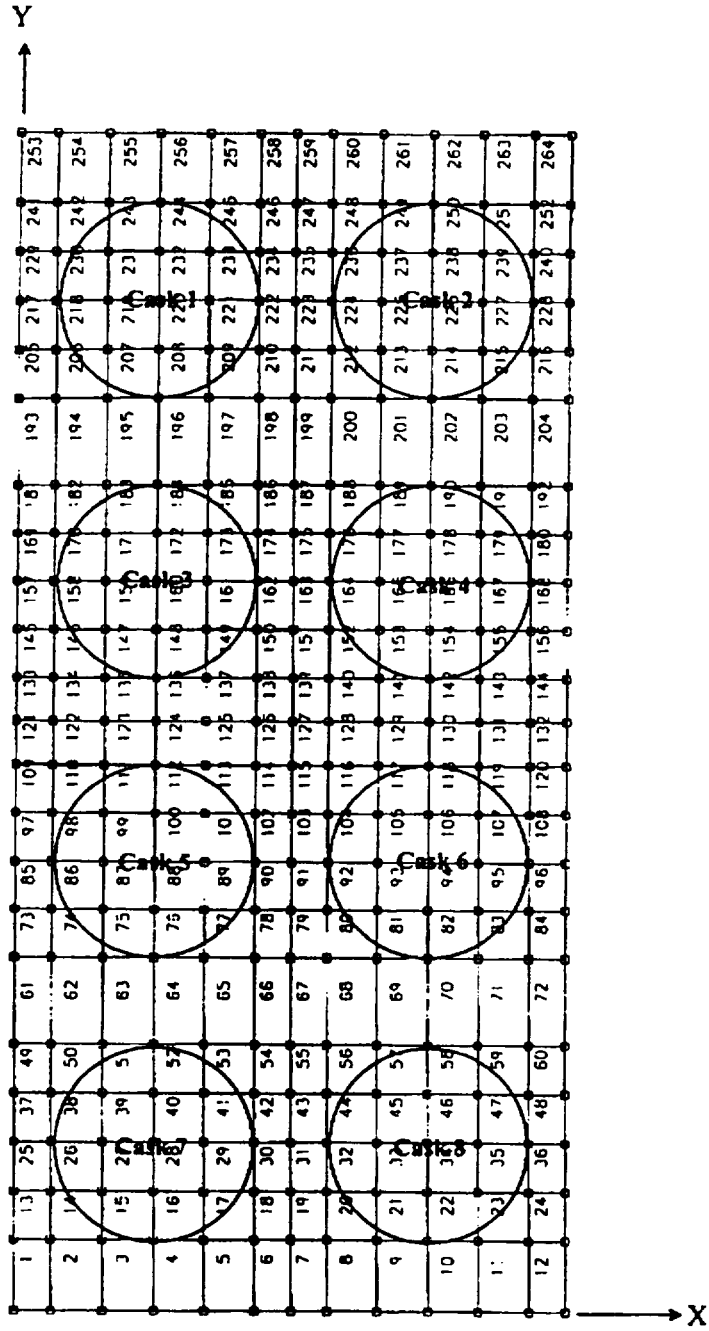

Figure 5.1-2 CECSAP Finite-Element Model with Element Numbers

CALCULATION COVER SHEET

PROJECT Private Fuel Storage Facility (PFSF)
SUBJECT Storage Pad Analysis and Design

JOB NO. 1101-000
FILE NO.
CALC NO. G(PO17)-2
NO. OF SHEETS 289

RECORD OF ISSUES

NO.	DESCRIPTION	BY	DATE	CHKD	DATE	APPRD	DATE
0	Initial Issue	DH	10/18/99	DH	10/18/99		10/18/99
1	Revision 1 (see notes below)	DH	12/6/99	DH	12/6/99		12/6/99
2	Revision 2 (see notes below)	DH	2/4/00		2/4/00		2/4/00
3	Revision 3 (see notes on Sheet ii)		4/5/01		4/5/01		4/5/01

☒ Nuclear Quality Assurance Category ☐ Non-Nuclear Quality Assurance Category

This set of calculations documents the engineering analyses and detailed calculations required for structural design of the reinforced-concrete spent-fuel cask storage pads to be constructed at the Private Fuel Storage Facility (PFSF) project site.

This set of calculations has been prepared in accordance with CEC's quality assurance procedure for nuclear projects.

Revision 1 was made to correct (1) typographical errors on Pages 5, 29, and A-3 and (2) insert computer output file names and explanation notes on Pages 43 and 51.

Revision 2 was made to correct typographical errors and to include additional clarifications on Pages 17, 21, 28, 236, 298, and 312.

NAME		INITIAL	SIGNATURE
Anwar Mirza	(Preparer/Checker)	AUM	Anwar Mirza
Donald Hamasaki	(Preparer/Checker)	DH	Donald Hamasaki
Ming S. Yang	(Preparer/Checker)	MY	
Kiat Lilhanand	(Preparer/Checker)	KL	K. Lilhanand
Wen S. Tseng	(Independent Reviewer)	WT	W. S. Tseng

International Civil Engineering Consultants, Inc.

CALCULATION COVER SHEET

PROJECT	Private Fuel Storage Facility (PFSF)	JOB NO.	1101-000
SUBJECT	Storage Pad Analysis and Design	FILE NO.	
		CALC NO.	G(PO17)-2
		SHEET	ii

Revision 3 was made to incorporate the following: (1) PGA of 0.711g and 0.695g for horizontal and vertical components of the new design ground motions, (2) Revised dynamic soil properties for lower-bound, best-estimate, and upper-bound soils provided by Geomatrix, (3) Revised cask force time-histories provided by Holtec, (4) Revised pad size to 30 ft by 67 ft with cask spacing in the long axis of the pad changed to 16 ft and cask spacing in the short axis of the pad remained at 15 ft, (5) Pad founded in soil cement with about 3 ft under the pad and 2 ft thick on its side walls, and (6) Revised transporter weight to 145 kips.

TABLE 6

SUMMARY OF TRIAXIAL TEST RESULTS FOR SOILS WITHIN ~10 FT OF GROUND SURFACE AT THE SITE

Boring	Sample	Depth ft	Elev ft	w %	ATTERBERG LIMITS LL	PL	PI	USC Code	γ_m pcf	γ_d pcf	e_o	σ_c ksf	s_u ksf	ε_a %	Type	Date
B-1	U-2C	5.9	4453.9	47.1	66.1	33.4	32.7	MH	79.3	53.9	2.15	0.0	2.03	1.7	CU	Nov '99
B-1	U-2B	5.3	4454.5	52.9	80.6	40.9	39.7	MH	70.8	46.3	2.67	1.0	2.21	6.0	CU	Nov '99
B-4	U-3D	10.4	4462.1	27.4	42.5	24.7	17.8	CL	85.5	67.1	1.53	1.3	2.18	4.0	UU	Jan '97
C-2	U-2D	11.1	4453.4	35.6	See U-2C & E[1]			CL	78.5	57.9	1.93	1.3	2.39	11.0	UU	Jan '97
CTB-1	U-3D	8.7	4463.7	47.9	See U-3C[2]			CH	91.9	62.1	1.73	1.7	2.84	5.0	CU	June '99
CTB-4	U-2D	9.5	4465.5	45.2	See U-2E[2]			CH	87.7	60.4	1.81	1.7	3.11	6.0	CU	June '99
CTB-6	U-3D	8.3	4467.9	52.7				CH	85.7	56.2	2.02	1.7	2.70	7.0	CU	June '99
CTB-N	U-1B	5.7	4468.4	30.1	41.3	22.5	18.8	CL	100.6	77.3	1.20	1.7	3.00	8.0	CU	Nov '98
CTB-N	U-2B	7.7	4466.4	65.4	See U-2A[2]			MH	74.6	45.1	2.76	1.7	2.41	13.0	CU	June '99
CTB-N	U-3D	10.5	4463.6	52.2	61.1	30.8	30.3	CH	86.3	56.7	1.98	1.7	2.73	7.0	CU	June '99
CTB-S	U-1B	5.8	4468.7	73.6	66.2	40.9	25.3	MH	78.0	44.9	2.78	1.7	2.05	12.0	CU	Nov '98
CTB-S	U-2D	8.4	4466.1	54.6	57.9	28.9	29.0	CH	90.0	58.2	1.92	1.7	2.40	5.0	CU	June '99
B-1	U-2D	6.5	4453.3	45.2	59.8	34.7	25.1	MH	76.7	52.8	2.22	2.1	3.26	15.0	CU	Mar '99
B-3	U-1B	5.2	4463.0	33.5	52.4	25.2	27.2	MH	90.6	67.9	1.50	2.1	3.55	8.0	CU	Mar '99
C-2	U-1D	6.3	4458.2	50.5	70.3	41.3	29.0	MH	74.5	49.5	2.43	2.1	3.03	12.0	CU	Mar '99

NOTES 1 Attachment 2 of SAR Appendix 2A.
2 Attachment 6 of SAR Appendix 2A.

ATTACHMENT C p C1/3
CALC 05996.02-G(B)-04-7

[geot]\05996\lab\triax-1.xls on 6/13/2000

STONE & WEBSTER ENGINEERING CORPORATION
CALCULATION SHEET

CALCULATION IDENTIFICATION NUMBER
J.O. OR W.O. NO. 05996.02
DIVISION & GROUP G(B)
CALCULATION NO. 05-2
OPTIONAL TASK CODE
PAGE 25K

5010 85

FIGURE 7

DIRECT SHEAR TEST

Boring C-2, Sample U-1C

PAD EMPLACEMENT AREA

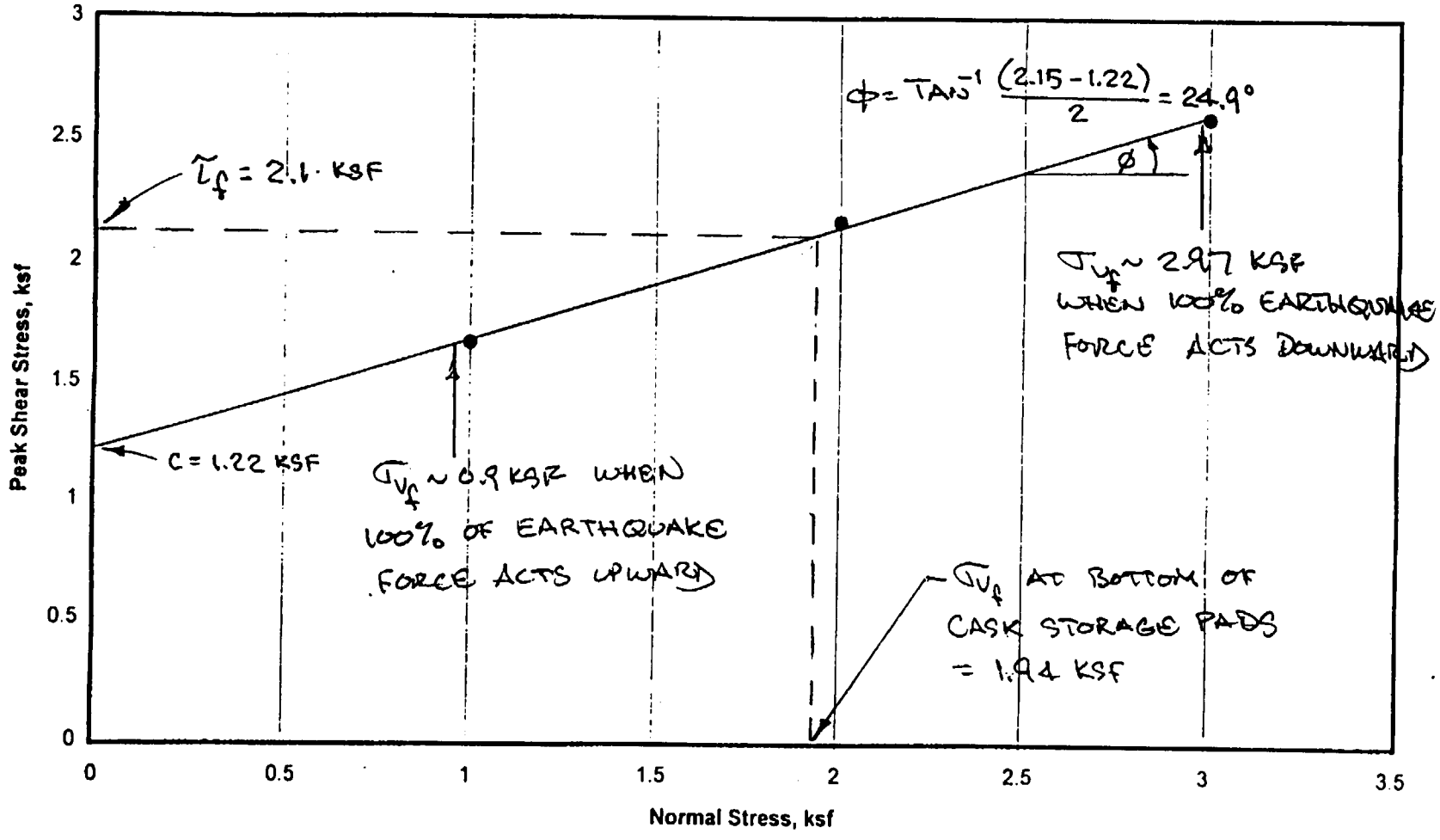

CALC 05996.02-G(B)-05-1/2 p 32

ATTACHMENT C p C2
CALC 05996.02-G(B)-04-7

REF SAR APP 2A ATT 7

STONE & WEBSTER ENGINEERING CORPORATION

CALCULATION SHEET

▲5010.65

CALCULATION IDENTIFICATION NUMBER				
J.O. OR W.O. NO.	DIVISION & GROUP	CALCULATION NO.	OPTIONAL TASK CODE	PAGE 36
05996.02	G(B)	05-2		

Figure 11

Summary of Triaxial Test Results for Soils Within Depth of ~10 ft

OF GROUND SURFACE AT THE SITE

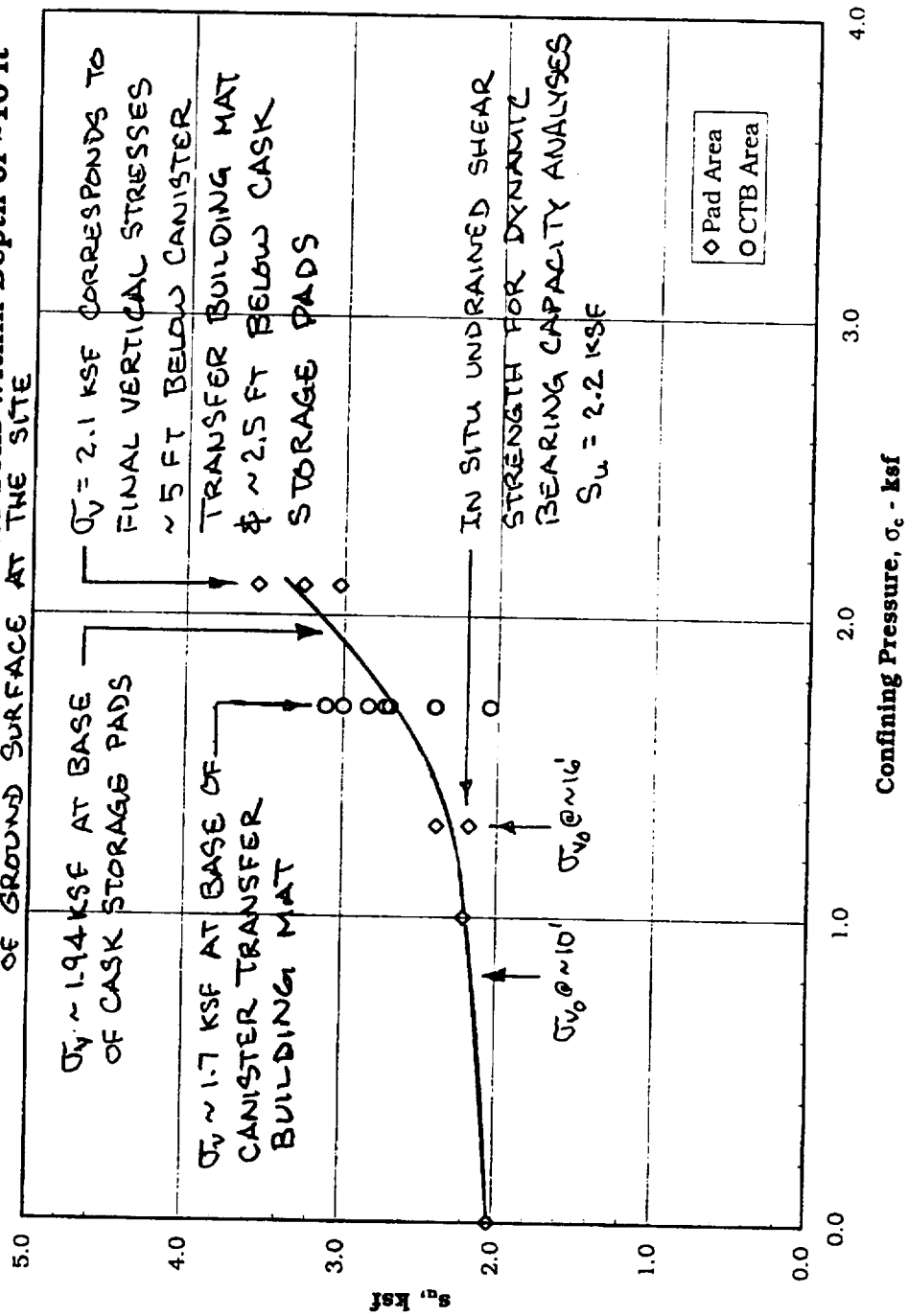

ATTACHMENT C P C3/3
CALC 05996.02-G(B)-04-7

[gcot]\05996\lab\triax-1.xls on 6/15/2000

STONE & WEBSTER, INC.

5010.64

CALCULATION SHEET

CLIENT & PROJECT	PAGE 1 OF 47
PRIVATE FUEL STORAGE, LLC – PFSF	+ 6 pp of ATTACHMENTS
CALCULATION TITLE	QA CATEGORY (✓)
STABILITY ANALYSIS OF CANISTER TRANSFER BUILDING	☑ I NUCLEAR SAFETY RELATED ☐ II ☐ III ☐ (other)

CALCULATION IDENTIFICATION NUMBER				OPTIONAL WORK PACKAGE NO.
JOB ORDER NO.	DISCIPLINE	CURRENT CALC NO	OPTIONAL TASK CODE	
05996.02	**G(B)**	**13-4**		

APPROVALS - SIGNATURE & DATE			REV. NO. OR NEW CALC NO.	SUPERSEDES CALC NO. OR REV NO.	CONFIRMATION REQUIRED ☑	
PREPARER(S)/DATE(S)	REVIEWER(S)/DATES(S)	INDEPENDENT REVIEWER(S)/DATE(S)			YES	NO
Original Signed By: LPSingh / 12-9-98	Original Signed By: DLAloysius / 12-10-98	Original Signed By: DLAloysiu / 12-10-98	0	N/A		✓
Original Signed By: DLAloysius / 9-3-99 SYBoakye / 9-3-99 *See page 2-1 for ID of*	Original Signed By: SYBoakye / 9-3-99 DLAloysius / 9-3-99 *Prepared / Reviewed By*	Original Signed By: TYChang / 9-3-99 TYChang / 9-3-99	1	G(C)-13 Rev. 0		✓
Original Signed By: PJTrudeau / 1-21-00	Original Signed By: TYChang / 1-21-00	Original Signed By: TYChang / 1-21-00	2	1		✓
Original Signed By: PJTrudeau / 6-19-00	Original Signed By: TYChang / 6-19-00	Original Signed By: TYChang / 6-19-00	3	2		✓
SYBoakye / 3-30-01 SYBoakye	TYChang / 3-30-01 Thomas Y. Chang	TYChang / 3-30-01 Thomas Y. Chang	4	3		✓

DISTRIBUTION

GROUP	NAME & LOCATION	COPY SENT (✓)	GROUP	NAME & LOCATION	COPY SENT (✓)
RECORDS MGT. FILES (OR FIRE FILE IF NONE)	JOB BOOK R4.2G	ORIG			
	FIRE FILE - Denver	☑			
Geotechnical	PJTrudeau – Stoughton/3	☑			

TABLE OF CONTENTS

TABLE OF CONTENTS 2

RECORD OF REVISIONS 3

OBJECTIVE 6

ASSUMPTIONS/DATA 6

GEOTECHNICAL PROPERTIES 7

METHOD OF ANALYSIS 10

ANALYSIS OF OVERTURNING STABILITY 11

Checking overturning about the N-S axis 11

Checking overturning about the E-W axis 12

ANALYSIS OF SLIDING STABILITY 14

Sliding Stability of the Canister Transfer Building on In Situ Clayey Soils 14

Sliding Stability of the Canister Transfer Building on Cohesionless Soils 15

ALLOWABLE BEARING CAPACITY 22

Bearing Capacity Factors 22

Shape Factors 23

Depth Factors 23

Inclination Factors 23

Static Bearing Capacity of the Canister Transfer Building 24

Dynamic Bearing Capacity of the Canister Transfer Building 27

CONCLUSIONS 35

OVERTURNING STABILITY OF THE CANISTER TRANSFER BUILDING 35

SLIDING STABILITY OF THE CANISTER TRANSFER BUILDING 35

BEARING CAPACITY 36

Static Bearing Capacity of the Canister Transfer Building 36

Dynamic Bearing Capacity of the Canister Transfer Building 36

REFERENCES 38

TABLES 39

FIGURES 43

ATTACHMENTS

A Pages from Calc 05996.02-G(B)-05-2 re Strength of Clayey Silt (pp 25K, 34, 35, & 36) 4 pp

B Annotated copies of CPT-37 & CPT-38 Showing Relative Difference Between Deeper Lying Soils and Those Tested in UU & CU Triaxial Tests At Depths ~10 Ft 2 pp

RECORD OF REVISIONS

REVISION 0

Original Issue

REVISION 1

Page count increased from 37 to 63.

- Revised seismic loadings to correspond to the PSHA 2,000-yr return period earthquake (p. 9-1)
- Added section on dynamic strength of soils (p. 9-3)
- Added section on seismic sliding resistance of the mat foundation (p. 9-5)
- Added section on evaluation of sliding on a deep slip surface (p. 9-8)
- Updated bearing capacity analysis using revised seismic loadings (p. 34-1)
  - Added additional loading combination: static + 40% seismic uplift + 100% in x (N-S) direction + 40% in z (E-W) direction
- Added additional references (p. 36-1)

NOTE:
SYBoakye prepared/DLAloysius reviewed pp. 9-8 through 9-12. Remaining pages prepared by DLAloysius and reviewed by SYBoakye.

REVISION 2

Major re-write of the calculation.

1. Renumbered pages and figures to make the calculation easier to follow.
2. Changed effective length of mat to 265 ft to make it consistent with Calculation 05996.02-SC-4, Rev 1 (SWEC, 1999a).
3. Added overturning analysis.
4. Corrected calculation of moments for joints 3 and 6 in Table 2.6-11 and incorporated revised seismic loads in calculations of overturning stability and dynamic bearing capacity.
5. Revised dynamic bearing capacity analyses to utilize only total strength parameters because these partially saturated soils will not have time to drain fully during the rapid cycling associated with the design basis ground motion. See Calculation 05996.02-G(B)-05-1 (SWEC, 1999b) for additional details.
6. Updated references to current issues of drawings.

7. Added references to foundation profiles through Canister Transfer Building area presented in SAR Figures 2.6-21 through 23.
8. Deleted analyses of bearing capacity on layered profile, as adequate factors of safety are obtained conservatively assuming that the total strengths measured for the clayey soils in the upper ~25' to 30' layer apply for the entire profile under the Canister Transfer Building and revised all of the detailed bearing capacity analyses.
9. Changed "Load Combinations" to "Load Cases" and defined these cases to be consistent throughout the various stability analyses included herein. These are the same cases as are used in the stability analyses of the cask storage pads, Calculation 05996.02-G(B)-04-5 (SWEC, 2000).
10. Added analysis of sliding on a deep plane at the top of silty sand/sandy silt layer, incorporating passive resistance acting on the block of clayey soil and the foundation mat overlying this interface.
11. Revised Conclusions to reflect results of these changes.

REVISION 3

1. Added a 1-ft deep key around the perimeter of the Canister Transfer Building mat to permit use of the cohesive strength of the in situ silty clay/clayey silt in resisting sliding due to loads from the design basis ground motion.
2. Revised shear strength used in the sliding stability analyses of the Canister Transfer Building mat supported on the in situ silty clay to be the strength measured in the direct shear tests performed on samples obtained from elevations approximately at the bottom of the 1-ft deep perimeter key. The shear strength used in this analysis equaled that measured for stresses corresponding to the vertical stresses at the bottom of the mat following completion of construction.
3. Removed static and dynamic bearing capacity analyses based on total-stress strengths.
4. The relative strength increase noted for the deeper lying soils in the cone penetration testing that was performed within the Canister Transfer Building footprint was used to determine a weighted average undrained strength of the soils in the entire upper layer for use in the bearing capacity analyses, since the soils within a depth equal to approximately the width of the foundation are effective in resisting bearing failures. This resulted in the average undrained strength for the bearing capacity analyses of the upper layer equal to 3.18 ksf.
5. Removed dynamic analyses based on increasing strengths of the cohesive soils that were measured in static tests to reflect well known phenomenon that the strength of cohesive soils increases as the rate of loading decreases.
6. Revised undrained shear strength of the clay block overlying the cohesionless layer to 2.2 ksf, based on the UU tests that were performed at confining pressures of 1.3 ksf (reported in Attachment 2 of Appendix 2A of the SAR) in the analysis of sliding of the Canister Transfer Building on deep plane of cohesionless soils.

7. Added shearing resistance available on the ends of the block of clay, since this soil must be sheared along these planes in order for the Canister Transfer Building to slide on a deep plane of cohesionless soils.
8. Revised method of calculating the inclination factor in the bearing capacity analyses to that presented by Vesic in Chapter 3 of Winterkorn and Fang (1975). Vesic's method expands upon the theory developed by Hansen for plane strain analyses of footings with inclined loads. 0Vesic's method permits a more rigorous analysis of inclined loads acting in two directions on rectangular footings, which more closely represents the conditions applicable for the Canister Transfer Building.
9. Replaced Tables 2, 2.6-9, and 2.6-10 with revised results for the changes in shear strength of the in situ soils noted above and deleted Table 3.

REVISION 4

1. Updated stability analyses to reflect revised design basis ground motions (a_H = 0.711g & a_V = 0.695g, per Table 1 of Geomatrix, 2001).
2. Resisting moment in overturning stability analysis calculated based on resultant of static and dynamic vertical forces.
3. Updated dimensions of foundation mat to 240 ft (E-W) x 279.5 ft (N-S), and changed the depth of the perimeter key to 1.5 ft, in accordance with design change identified in Figure 4.7-1 (3 sheets), "Canister Transfer Building," of SAR Revision 21 (based on S&W Drawings 0599602-EC-404A-B & 404B-B).
4. Added definition of "m" used in the inclination factors for calculating allowable bearing capacity.
5. Updated references to supporting calculations.
6. Updated discussions and conclusions to incorporate revised results.

OBJECTIVE

To determine the stability against overturning, sliding, and static and dynamic bearing capacity failure of the Canister Transfer Building supported on a mat foundation.

ASSUMPTIONS/DATA

The footprint of the Canister Transfer Building foundation mat is shown on SAR Figure 4.7-1, "Canister Transfer Building," and S&W Drawing 0599602-EC-404A-B & 404B-B, Canister Transfer Building – Conc Mat Foundation Plan, Sheets 1 & 2. The elevation view of the structure is shown on Sheets 2 & 3 of SAR Figure 4.7-1. The foundation mat is 240 ft (E-W) ft x 279.5 ft (N-S) ft x 5 ft thick, with a 5-ft wide x 1.5 –ft deep foundation key along the perimeter of the mat.

Figure 1 presents a schematic view of the foundation and identifies the coordinate system used in these analyses. Figure 2 presents the stick model used in the structural analysis of the Canister Transfer Building.

The various static and dynamic loads and load combinations used in these analyses were obtained from Calculation 05996.02-SC-5-2 (S&W, 2001). All loads are transferred to the bottom of the mat. Moments, when transferred to the bottom of the mat, result in eccentricity of the applied load with respect to the center of gravity of the mat. Lateral loads, when combined with the vertical load, result in inclination of the vertical load, which decreases the allowable bearing capacity.

The generalized soil profile at the site is shown on Figure 3. The soil profile consists of ~30 ft of silty clay/clayey silt with sandy silt/silty sand layers (Layer 1), overlying ~30 ft of very dense fine sand (Layer 2), overlying extremely dense silt (N ≥100 blows/ft, Layer 3). SAR Figures 2.6-21 through 23 present foundation profiles showing the relationship of the Canister Transfer Building with respect to the underlying soils. These profiles, located as shown in SAR Figure 2.6-18, provide more detailed stratigraphic information, especially within the upper ~30-ft thick layer at the site.

The bearing capacity analyses assume that Layer 1, which consists of silty clay/clayey silt with some sandy silt/silty sand, is of infinite thickness and has strength properties based on those measured for the clayey soils within the upper layer. These assumptions simplify the analyses and they are very conservative. The strength of the sandy silt/silty sand in the upper layer is greater than that of the clayey soils, based on the increases in Standard Penetration Test (SPT) blow counts (N-values) and the increased tip resistance (see SAR Figure 2.6-5, Sheet 1) in the cone penetration testing (ConeTec, 1999) measured for these soils. The underlying soils are even stronger, based on their SPT N-values, which generally exceed 100 blows/ft.

GEOTECHNICAL PROPERTIES

Based on laboratory test results presented in Table 3 of Calculation 05996.02-G(B)-5-2 (SWEC, 2000a), γ_{moist} = 80 pcf above the bottom of the mat and 90 pcf below the mat.

Table 6 of Calc 05996.02-G(B)-05-2 (copy included in Attachment A) summarizes the results of the triaxial tests that were performed within depths of ~10 ft. The undrained shear strengths (s_u) measured in these tests are plotted vs confining pressure in Figure 11 of Calc 05996.02-G(B)-05-2 (copy included in Attachment A). This figure is annotated to indicate the vertical stresses existing prior to construction and following completion of construction.

The undrained shear strengths measured in the triaxial tests are used for the dynamic bearing capacity analyses because the soils are partially saturated and they will not drain completely during the rapid cycling of loadings associated with the design basis ground motion. As indicated in Figure 11 of Calc 05996.02-G(B)-05-2 (copy included in Attachment A), the undrained strength of the soils within ~10 ft of grade is assumed to be 2.2 ksf. This value is the lowest strength measured in the UU tests, which were performed at confining stresses of 1.3 ksf. This confining stress corresponds to the in situ vertical stress existing near the middle of the upper layer, prior to construction of these structures. It is much less than the final stresses that will exist under the cask storage pads and the Canister Transfer Building following completion of construction. Figure 11 of Calc 05996.02-G(B)-05-2 (copy included in Attachment A) illustrates that the undrained strength of these soils increase as the loadings of the structures are applied; therefore, 2.2 ksf is a very conservative value for use in the bearing capacity analyses of these structures.

The bearing capacity of the structures are dependant primarily on the strength of the soils in the upper ~25 to ~30-ft layer at the site. All of the borings drilled at the site indicate that the soils underlying this upper layer are very dense fine sands overlying silts with standard penetration test blow counts that exceed 100 blows/ft. The results of the cone penetration testing, presented in ConeTec(1999) and plotted in SAR Figure 2.6-5, Sheets 1 to 14, illustrate that the strength of the soils in the upper layer are much greater at depths below ~10 ft than in the range of ~5 ft to ~10 ft, where most of the triaxial tests were performed.

In determining the bearing capacity of the foundation, the average shear strength of the soils along the anticipated bearing capacity failure slip surface should be used. This slip surface is normally confined to the zone within a depth below the footing equal to the minimum width of the footing. For the Canister Transfer Building, the effective width of the footing is decreased because of the large eccentricity of the load on the mat due to the seismic loading. As indicated in Table 2.6-10, the minimum effective width of the Canister Transfer Building occurs for Load Case IIIA, where B' = 119.5 ft. This is greater than the depth of the upper layer (~30 ft). Therefore, it is reasonable to use the average strength of the soils in the upper layer in the bearing capacity analyses, since all of the soils in the

upper layer will be effective in resisting failure along the anticipated bearing capacity slip surface.

The undrained strength used in the bearing capacity analyses presented herein is a weighted average strength that is applicable for the soils in the upper layer. This value is determined using the value of undrained shear strength of 2.2 ksf noted above for the soils tested at depths of ~10 ft and the relative strength increase measured for the soils below depths of ~12 ft in the cone penetration tests that were performed within the Canister Transfer Building footprint. As indicated on SAR Figure 2.6-18, these included CPT-37 and CPT-38. Similar increases in undrained strength for the deeper lying soils were also noted in all of the other CPTs performed in the pad emplacement area.

Attachment B presents copies of the plots of s_u vs depth for CPT-37 and CPT-38, which are included in Appendix D of ConeTec(1999). These plots are annotated to identify the average undrained strength of the cohesive soils measured with respect to depth. As shown by the plot of s_u for CPT-37, the weakest zone exists between depths of ~5 ft and ~12 ft. The results for CPT-38 are similar, but the bottom of the weakest zone is at a depth of ~11 ft. The underlying soils are all much stronger. The average value of s_u of the cohesive soils for the depth range from ~18 ft to ~28 ft is ~2.20 tsf, compared to s_u ~1.34 tsf for the zone between ~5 ft and ~12 ft. Therefore, the undrained strength of the deeper soils in the upper layer was ~64% (Δs_u = 100% x [(2.20 tsf – 1.34 tsf) / 1.34 tsf] higher than the strength measured for the soils within the depth range of ~5 ft to ~12 ft. The relative strength increase was even greater than this in CPT-38.

Using 2.2 ksf, as measured in the UU triaxial tests performed on specimens obtained from depths of ~10 ft, as the undrained strength applicable for the weakest soils (i.e., those in the depth range of ~5 ft to ~12 ft), the average strength for the soils in the entire upper layer is calculated as shown in Figure 4. The resulting average value, weighted as a function of the depth, is s_u ~3.18 ksf. This value would be much higher if the results from CPT-38 were used; therefore, this is considered to be a reasonable lower-bound value of the average strength applicable for the soils in the upper layer that underlie the Canister Transfer Building.

Further evidence that this is a conservative value of s_u for the soils in the upper layer is presented in Figure 11 of Calc 05996.02-G(B)-05-2 (copy included in Attachment A). This plot of s_u vs confining pressure illustrates that this value is slightly less than the average value of s_u measured in the CU triaxial tests that were performed on specimens obtained from depths of ~10 ft at confining stresses of 2.1 ksf. As indicated in this figure, the confining stress of 2.1 ksf used to test these specimens is comparable to the vertical stress that will exist ~5 ft below the Canister Transfer Building mat following completion of construction. Since these tests were performed on specimens of the weakest soils underling the Canister Transfer Building mat (the deeper lying soils are stronger based on the SPT and the cone penetration test data), it is conservative to use the weighted average value of s_u of 3.18 ksf for the soils in the entire upper layer of the profile in the bearing capacity analyses.

Direct shear tests were performed on undisturbed specimens of the silty clay/clayey silt obtained from Borings CTB-6 and CTB-S, which were drilled in the locations shown in SAR Figure 2.6-18. These specimens were obtained from Elevation ~4469, the elevation of the bottom of the perimeter key proposed at the base of Canister Transfer Building mat. Note, this key is being constructed around the perimeter of the mat to ensure that the full shear strength of the clayey soils is available to resist sliding of the structure due to loads from the design basis ground motion. These direct shear tests were performed at normal stresses that ranged from 0.25 ksf to 3.0 ksf. This range of normal stresses bounds the ranges of stresses expected for static and dynamic loadings from the design basis ground motion.

The results of these tests are presented in Attachments 7 and 8 of the Appendix 2A of the SAR and they are plotted in Figures 9 and 10 of Calc 05996.02-G(B)-05-2 (copies included in Attachment A). Because of the fine grained nature of these soils, they will not drain completely during the rapid cycling of loadings associated with the design basis ground motion. Therefore, sliding stability analyses included below of the Canister Transfer Building constructed directly on the silty clay are performed using the average shear strength measured in these direct shear tests for a normal stress equal to the vertical stress under the building following completion of construction, but prior to imposition of the dynamic loading due to the earthquake. As shown in Figures 9 and 10 of Calc 05996.02-G(B)-05-2 (copies included in Attachment A), this average shear strength is 1.8 ksf and the friction angle is set equal to 0°.

Effective-stress strength parameters are estimated to be $\phi = 30°$ and $c = 0$ ksf, even though these soils may be somewhat cemented. This value of ϕ is based on the PI values for these soils, which ranged between 5% and 23% (SWEC, 2000a), and the relationship between ϕ and PI presented in Figure 18.1 of Terzaghi & Peck (1967).

Therefore, static bearing capacity analyses are performed using the following soil strengths:

Case IA Static using undrained strength parameters: $\phi = 0°$ & $c = 3.18$ ksf.

Case IB Static using effective-stress strength parameters: $\phi = 30°$ & $c = 0$.

and dynamic bearing capacity analyses are performed using $\phi = 0°$ & $c = 3.18$ ksf.

METHOD OF ANALYSIS

Load cases analyzed consist of combinations of vertical static, vertical dynamic (compression and uplift, Y-direction), and horizontal dynamic (in X and Z-directions) loads.

The following load combinations are analyzed:

Case I	Static
Case II	Static + dynamic horizontal forces due to the earthquake
Case III	Static + dynamic horizontal + vertical uplift forces due to the earthquake
Case IV	Static + dynamic horizontal + vertical compression forces due to the earthquake

For Case II, 100% of the dynamic lateral forces in both X and Z directions are combined. For Cases III and IV, 100% of the dynamic loading in one direction is assumed to act at the same time that 40% of the dynamic loading acts in the other two directions. For these cases, the suffix "A" is used to designate 40% in the X direction (N-S for the Canister Transfer Building, as shown in Figure 1), 100% in the Y direction (vertical), and 40% in the Z direction (E-W). Similarly, the suffix "B" is used to designate 40% in the X direction, 40% in the Y, and 100% in the Z, and the suffix "C" is used to designate 100% in the X direction and 40% in the other two directions. Thus,

Case IIIA	40%	N-S direction,	-100%	Vertical direction,	40%	E-W direction.
Case IIIB	40%	N-S direction,	-40%	Vertical direction,	100%	E-W direction.
Case IIIC	100%	N-S direction,	-40%	Vertical direction,	40%	E-W direction.

The negative sign for the vertical direction in Case III indicates uplift forces due to the earthquake. Case IV is the same as Case III, but the vertical forces due to the earthquake act downward in compression; therefore, the signs on the vertical components are positive.

Combining the effects of the three components of the design basis ground motion in this manner is in accordance with ASCE-4 (1986).

ANALYSIS OF OVERTURNING STABILITY

The factor of safety against overturning is defined as:

$$FS_{OT} = \Sigma M_{Resisting} \div \Sigma M_{Driving}$$

The overturning stability of the Canister Transfer Building is determined using the dynamic loads for the building due to the PSHA 2,000-yr return period earthquake. These loads are listed in Table 2.6-11, and they were developed based on the dynamic analysis performed in Calculation 05996.02-SC-5 (S&W, 2001) and described in SAR Section 4.7.1.5.3. The masses and accelerations of the joints (see Figure 2 for locations of the joints) used in the model of the Canister Transfer Building in Calculation 05996.02-SC-5 are listed on the left side of Table 2.6-11, and the resulting inertial forces and associated moments are listed on the right. Based on building geometry shown schematically in Figure 1 and the forces and moments shown in Table 2.6-11, overturning is more critical about the N-S axis (279.5 ft) than about the E-W axis (240 ft). Page 37 of Calculation 05996.02-SC-5 indicates that the moment about the N-S axis due to angular (rotational) acceleration of the structure is 465,729 ft-K and 1,004,332 ft-K about the E-W axis.

The vertical force due to the earthquake can act upward or downward. However, when it acts downward, it acts in the same direction as the weight, tending to stabilize the structure with respect to overturning stability. The minimum factor of safety against overturning will occur when the maximum dynamic vertical force acts in the upward direction, tending to unload the mat and reduce the resisting moment. Therefore, calculate the factor of safety for Case III.

CHECKING OVERTURNING ABOUT THE N-S AXIS

For Case IIIA, where 40% of the horizontal force due to the earthquake act in the N-S and E-W directions and 100% acts vertically upward, the resisting moment is calculated as the net effective weight of the building x the distance from one edge of the mat to the center of the mat. The net effective weight of the building is 97,749 – 79,779 K, (i.e., Weight – Total $F_{V\ Dyn}$), as shown in Table 2.6-11. For overturning about the N-S axis, the moment arm for the resisting moment equals ½ of 240 ft, or 120 ft. Therefore,

$$\Sigma M_{Resisting} = (97{,}749 - 79{,}779)\ K \times 120\ ft = 2{,}156{,}400\ ft\text{-}K.$$

The driving moments include 40% of the ΣM acting about the N-S axis, ΣM_X in Table 2.6-11, which is 0.4 x 2,706,961.4 = 1,082,785 ft-K, and 40% of the moment about the N-S axis due to angular (rotational) acceleration of the structure, which is 0.4 x 465,729 = 186,292 ft-K.

The square root of the sum of the squares (SRSS) is used to combine the moments to account for the fact that the maximum responses of earthquake do not act in all three orthogonal directions and angular rotations at the same time. The moments acting about the E-W axis do not contribute to overturning about the N-S axis; therefore,

$$\sum M_{Driving} = \sqrt{1{,}082{,}785^2 + (186{,}292)^2} = 1{,}098{,}694 \quad ft - K$$

and FS_{OT} = 2,156,400 ÷ 1,098,694 = 1.96 about the N-S axis for Case IIIA.

For Case IIIB, where 100% of the horizontal force due to the earthquake acts in the E-W direction and 40% acts in the N-S direction and vertically upward, the resisting moment is calculated as the net effective weight of the building x the distance from one edge of the mat to the center of the mat. The net effective weight of the building is 97,749 – 79,779 K, (i.e., Weight – Total $F_{V\ Dyn}$), as shown in Table 2.6-11. For overturning about the N-S axis, the moment arm for the resisting moment equals ½ of 240 ft, or 120 ft. Therefore,

$\Sigma M_{Resisting}$ = (97,749 – 0.4 x 79,779) K x 120 ft = 7,900,488 ft-K.

The driving moments include 100% of the ΣM acting about the N-S axis, ΣM_X in Table 2.6-11, which is 2,706,961.4 ft-K, and 100% of the moment about the N-S axis due to angular (rotational) acceleration of the structure, which is 465,729 ft-K.

The square root of the sum of the squares (SRSS) is used to combine the moments to account for the fact that the maximum responses of earthquake do not act in all three orthogonal directions and angular rotations at the same time. The moments acting about the E-W axis do not contribute to overturning about the N-S axis; therefore,

$$\sum M_{Driving} = \sqrt{2{,}706{,}961.4^2 + 465{,}729^2} = 2{,}746{,}733 \quad ft - K$$

and FS_{OT} = 7,900,488 ÷ 2,746,733 = 2.88 about the N-S axis for Case IIIB.

Case IIIC, where 100% of the horizontal force due to the earthquake acts in the N-S direction and 40% acts in the E-W direction and vertically upward, is less critical for overturning about the N-S axis than Case IIIB.

CHECKING OVERTURNING ABOUT THE E-W AXIS

For Case IIIA, where 40% of the horizontal force due to the earthquake act in the N-S and E-W directions and 100% acts vertically upward, the resisting moment is calculated as the net effective weight of the building x the distance from one edge of the mat to the center of the mat. The net effective weight of the building is 97,749 – 79,779 K, (i.e., Weight – Total $F_{V\ Dyn}$), as shown in Table 2.6-11. For overturning about the E-W axis, the moment arm for the resisting moment equals ½ of 279.5 ft, or 139.75 ft. Therefore,

$\Sigma M_{Resisting}$ = (97,749 – 79,779) K x 139.75 ft = 2,511,308 ft-K.

The driving moments include 40% of the ΣM acting about the E-W axis, ΣM_X in Table 2.6-11, which is 0.4 x 2,849,703 = 1,139,881 ft-K, and 40% of the moment about the E-W axis due to angular (rotational) acceleration of the structure, which is 0.4 x 1,004,322 = 401,729 ft-K.

The square root of the sum of the squares (SRSS) is used to combine the moments to account for the fact that the maximum responses of earthquake do not act in all three orthogonal directions and angular rotations at the same time. The moments acting about the N-S axis do not contribute to overturning about the E-W axis; therefore,

$$\sum M_{Driving} = \sqrt{1{,}139{,}881^2 + 401{,}729^2} = 1{,}208{,}601 \quad ft-K$$

and $FS_{OT} = 2{,}511{,}308 \div 1{,}208{,}601 = 2.07$ about the E-W axis for Case IIIA.

For Case IIIC, where 100% of the horizontal force due to the earthquake acts in the N-S direction and 40% acts in the E-W direction and vertically upward, the resisting moment is calculated as the net effective weight of the building x the distance from one edge of the mat to the center of the mat. The net effective weight of the building is 97,749 – 79,779 K, (i.e., Weight – Total $F_{V\ Dyn}$), as shown in Table 2.6-11. For overturning about the E-W axis, the moment arm for the resisting moment equals ½ of 279.5 ft, or 139.75 ft. Therefore,

$$\Sigma M_{Resisting} = (97{,}749 - 0.4 \times 79{,}779)\ K \times 139.75\ ft = 9{,}200{,}777\ ft\text{-}K.$$

The driving moments include 100% of the ΣM acting about the E-W axis, ΣM_X in Table 2.6-11, which is 2,849,703.4 ft-K, and 100% of the moment about the E-W axis due to angular (rotational) acceleration of the structure, which is 1,004,322 ft-K.

The square root of the sum of the squares (SRSS) is used to combine the moments to account for the fact that the maximum responses of earthquake do not act in all three orthogonal directions and angular rotations at the same time. The moments acting about the N-S axis do not contribute to overturning about the E-W axis; therefore,

$$\sum M_{Driving} = \sqrt{2{,}849{,}703^2 + 1{,}004{,}322^2} = 3{,}021{,}501 \quad ft-K$$

and $FS_{OT} = 9{,}200{,}777 \div 3{,}021{,}501 = 3.05$ about the E-W axis for Case IIIC.

Case IIIB, where 100% of the horizontal force due to the earthquake acts in the N-S direction and 40% acts in the E-W direction and vertically upward, is less critical for overturning about the N-S axis than Case IIIC.

ANALYSIS OF SLIDING STABILITY

The factor of safety (FS) against sliding is defined as follows:

FS = Resisting Force ÷ Driving Force = T ÷ V

For this analysis, ignoring passive resistance of the soil adjacent to the mat, the resisting, or tangential shear force, T, below the base of the pad is defined as follows:

$$T = N \tan \phi + c\,B\,L$$

where, N (normal force) = $\Sigma F_v = F_{v\,Static} + F_{v\,Eqk}$

$\phi = 0°$ (for Silty Clay/Clayey Silt)

c = 1.8 ksf, as discussed above under "Geotechnical Properties."

B = 240 feet

L = 279.5 feet

The driving force, V, is calculated as follows:

$$V = \sqrt{F_{HN-S}^2 + F_{HE-W}^2}$$

SLIDING STABILITY OF THE CANISTER TRANSFER BUILDING ON IN SITU CLAYEY SOILS

The sliding stability of the CTB was evaluated using the foundation loadings developed in the soil-structure interaction analyses (Calculation 05996.02-SC-5, S&W, 2001). In this case, the strength of the clayey soils at the bottom of the 1.5-ft deep key around the CTB mat was based on the average of the two sets of direct shear tests performed on samples of soils obtained from beneath the CTB at the elevation proposed for founding the structure. The results of these tests are included in Attachments 7 and 8 of Appendix 2A of the SAR. As discussed above under Geotechnical Properties, $\phi = 0°$ and a shear strength of 1.8 ksf were used for the clayey soils underlying the Canister Transfer Building in determining resisting forces for the earthquake loading combinations.

The backfill to be placed around the Canister Transfer Building mat and 1.5-ft deep key will be soil cement, constructed from the eolian silt silty clay that was excavated from the area. For soil cement constructed using these soils, it is reasonable to assume the lower bound value of γ is 100 pcf, $\phi = 0°$ & c = 125 psi.

For the soil cement, $P_p = 2c$

For 5' of soil cement, using a factor of safety of 2 applied to the passive resistance,

$$P_p = \frac{2 \times c}{FS} = \frac{2 \times 125 \frac{\#}{in.^2} \times \frac{144 \cdot in.^2}{ft^2} \times \frac{K}{1{,}000\#}}{2} = 90 \frac{K}{LF}$$

The CTB mat is 240' wide in the E-W direction and 279.5' long in the N-S direction; therefore, the total passive force available to resist sliding is at least 240' x 90 K/LF = 26,500 K acting in the N-S direction.

Lambe & Whitman (1969, p 165) indicates that little horizontal compression, ~0.5%, is required to reach half of full passive resistance for dense sands. The eolian silts will be compacted to a dense state; therefore, assume that half of the total passive resistance is available to resist sliding of the building. Note, 0.5% of the 5 ft height of the mat + 1.5-ft deep key = 0.005 x 6.5 ft x 12 in./ft = 0.39 in. Since there are no safety-related systems that would be severed or otherwise impacted by movements of this small magnitude, it is reasonable to use this passive thrust to resist sliding.

The results of the sliding stability analysis of the Canister Transfer Building are presented in Table 2.6-13. These results assume that only one-half of the passive pressures are available to resist sliding and no credit is taken for the fact that the strength of cohesive soils increases as the rate of loading increases (Schimming et al, 1966, Casagrande and Shannon, 1948, and Das, 1993); therefore, they represent a conservative lower-bound value of the sliding stability of the Canister Transfer Building founded on in situ silty clay/clayey silt with soil-cement backfill around the mat.

The sliding stability for Cases IIIA, IIIB, and IIIC was calculated by summing the driving forces using the SRSS rule, but without similarly summing the passive resisting forces. The sliding stability for Cases IVA, IVB, and IVC were calculated by summing both the driving forces and the passive resisting forces using the SRSS rule, which is believed to more realistically represent the actual condition. As expected, the sliding stability calculated for Case IV generally gives a higher factor of safety against sliding than those for Case III.

These results indicate that the factors of safety are acceptable for all load combinations. The lowest factor of safety was 1.13, which applies for Case IIIC, where 100% of the dynamic earthquake forces act in the N-S direction and 40% act in the other two directions. These results are all > 1.1, the minimum value required for sliding.

SLIDING STABILITY OF THE CANISTER TRANSFER BUILDING ON COHESIONLESS SOILS

The Canister Transfer Building will be founded on clayey soils that have an adequate amount of cohesive strength to resist sliding due to the dynamic forces from the design basis ground motion. As shown in SAR Figures 2.6-21 through 2.6-23, however, some of the soils underlying the building are cohesionless within the depth zone of about 10 to 20 ft, especially near the southern portion of the building. Analyses presented on the next six pages address the possibility that sliding may occur along a deeper slip plane at the clayey soil/sandy soil interface as a result of the earthquake forces.

The resistance to sliding is greatly reduced for frictional materials when the dynamic forces due to the earthquake act upward. The normal forces act downward for Case IV loadings and, hence, the resisting forces will be much greater than those for Case III.

Therefore, these analyses are performed only for Load Cases IIIA, IIIB, and IIIC. As described above, these load cases are defined as follows:

Case IIIA	40%	N-S direction,	-100%	Vertical direction,	40%	E-W direction.
Case IIIB	40%	N-S direction,	-40%	Vertical direction,	100%	E-W direction.
Case IIIC	100%	N-S direction,	-40%	Vertical direction,	40%	E-W direction.

As shown in SAR Figures 2.6-21 through 2.6-23, the top of the cohesionless layer varies from about 5 ft to about 9 ft below the mat, and it generally is at a depth of about 6 ft below the mat. These analyses include the passive resistance acting on a plane extending from grade down to the top of the cohesionless layer, plus the shear strength available at the ends of the silty clay block under the mat, plus the frictional resistance available along the top of the cohesionless layer. The weight of the clayey soils existing between the top of the cohesionless soils and the bottom of the mat is included in the normal force used to calculate the frictional resistance acting along the top of the cohesionless layer.

A review of the cone penetration test results (ConeTec, 1999) obtained within the top 2 ft of the layer of nonplastic silt/silty sand/sandy silt underlying the Canister Transfer Building indicated that $\phi = 38°$ is a reasonable minimum value for these soils. This review is presented on the next page.

The next five pages illustrate that the factor of safety against sliding along the top of this layer is >1.1 for all load cases (i.e., Load Cases IIIA, IIIB, and IIIC). These analyses include several conservative assumptions. They are based on static strengths of the silty clay block under the Canister Transfer Building mat, even though, as reported in Das (1993), experimental results indicate that the strength of cohesive soils increases as the rate of loading increases. For rates of strain applicable for the cyclic loading due to the design basis ground motion, Das indicates that for most practical cases, one can assume that $c_{u\ dynamic} \sim 1.5 \times c_{u\ static}$. In addition, the silty sand/sandy silt layer is not continuous under the Canister Transfer Building mat, and this analysis neglects cementation of these soils that was observed in the samples obtained in the borings. Therefore, sliding is not expected to occur along the surface of the cohesionless soils underlying the Canister Transfer Building.

NOTED JAN 2 1 2000 P. J. Trudeau

▲5010.65

1 CALCULATION IDENTIFICATION NUMBER				PAGE 17
J.O. OR W.O. NO. 05996.02	DIVISION & GROUP G(B)	CALCULATION NO. 13-4	OPTIONAL TASK CODE	

SLIDING ON DEEP PLANE AT TOP OF SILTY SAND/ SANDY SILT LAYER

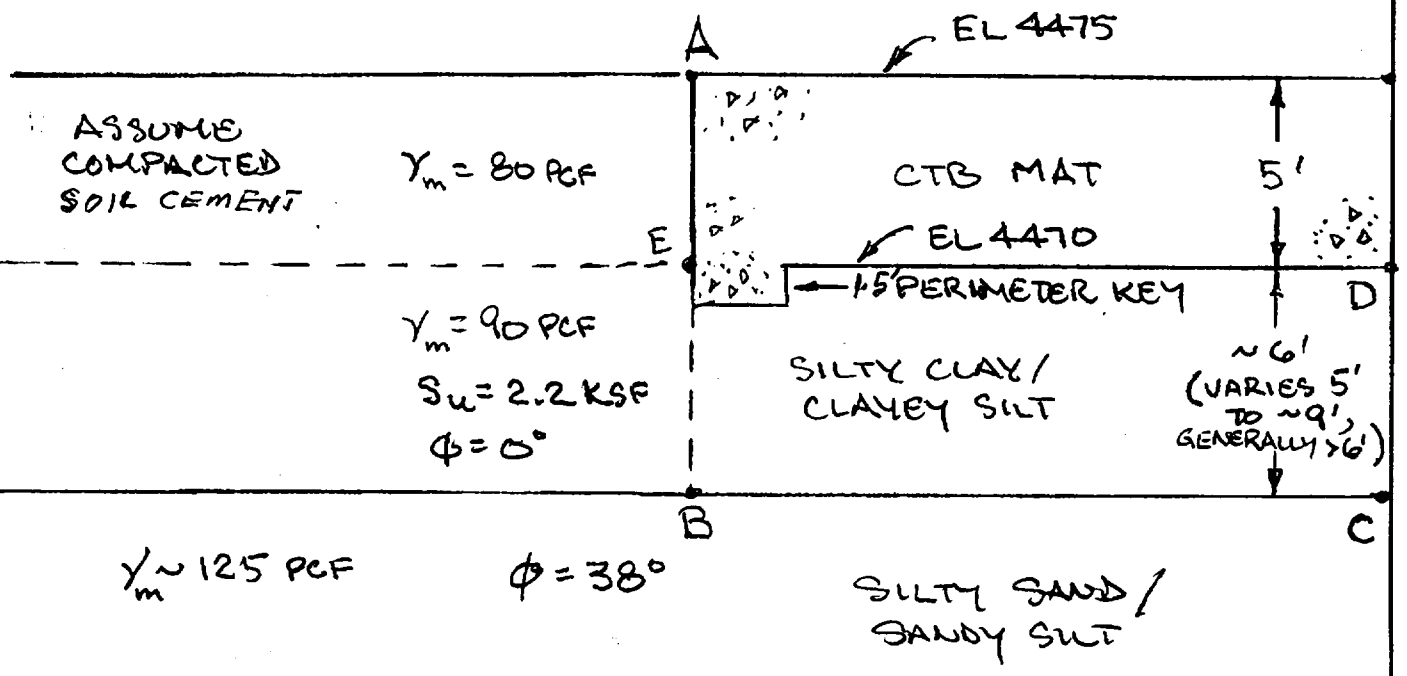

NOTE: VALUE OF ϕ BASED ON ϕ DATA FROM CPT-37 & 38. PRESENTED IN CONETEC (1999)

ID	~DEPTH OF SILTY SAND	MIN ϕ	MAX ϕ	AVG ϕ	MEDIAN ϕ	ϕ IN TOP 2'
CPT-37	~11.6' TO ~18.7'	36*	44	40	40	~38
CPT-38	~11' TO ~18'	38	46	43	44	~38

PASSIVE PRESSURES ACTING ON PLANE AB WILL INCREASE AS B GETS DEEPER IN THE SILTY SAND/SANDY SILT LAYER; ∴ USE ϕ NEAR THE TOP OF THE LAYER. ⇒ ϕ = 38°.

N VALUES ARE HIGH, GENERALLY ≫ 20 BL/FT; ∴ ϕ = 38° IS REASONABLE

* EXCLUDING SINGLE VALUE OF ϕ = 34° AT z = 13.8'

SLIDING ON DEEP COHESIONLESS PLANE

$$FS_{SLIDING} = \frac{\Sigma \text{ RESISTING FORCES}}{\Sigma \text{ DRIVING FORCES}}$$

RESISTING FORCES INCLUDE: PASSIVE RESISTANCE AVAILABLE ALONG AB + SHEAR RESISTANCE ALONG ENDS OF BLOCK BCDE + FRICTION ALONG BC.

(1) PASSIVE RESISTANCE AVAILABLE ALONG AB INCLUDES $(2 \times 5 \times 125 \times .144 \frac{K}{FT^2}) \times (5')$ = 180 K/LF FOR COMPACTED 5' SOIL-CEMENT ADJACENT TO 5' MAT.

$+ \frac{1}{2} \gamma H^2 K_p + q_s H K_p + 2cH\sqrt{K_p}$ FOR 5' BLOCK OF SILTY CLAY UNDERLYING THE COMPACTED SOIL-CEMENT

$$\frac{1}{2}\left(0.090 \frac{K}{FT^3}\right) \times (5\,FT)^2 \times \overset{K_p}{1.0} + \overset{H}{6\,FT} \times \overset{\gamma}{0.080 \frac{K}{FT^3}} \times 5\,FT \times \overset{K_p}{1.0}$$

$$+ 2 \times \overset{c}{2.2 \frac{K}{FT^2}} \times 5\,FT \times \sqrt{1.0} = 1.125 + 2.40 + 22.0 = 25.52 \frac{K}{FT}$$

∴ TOTAL PASSIVE RESISTANCE AVAILABLE ALONG AB

= 180 + 25.52 = 205.52 K/LF

(2) ESTIMATE ADDITIONAL RESISTANCE TO SLIDING AVAILABLE AT THE ENDS OF THE BLOCK OF SILTY CLAY THAT MUST SHEARED BEFORE THE CTB CAN SLIDE. INCLUDE ONLY THE PORTION BELOW THE CTB MAT; i.e., BCDE SHOWN ON PAGE 15.

$S_u = 2.2$ KSF, = MINIMUM S_u MEASURED IN UU TRIAXIAL TESTS AT $\sigma_c = 1.3$ KSF

AREA BCDE = 6 FT × 240 FT_{E-W} = 1440 $\frac{FT^2}{END}$

$\therefore \Delta T_{ENDS_{E-W}} = 2 \text{ ENDS} \times 1440 \frac{FT^2}{END} \times 2.2 \frac{K}{FT^2} = 6{,}336 \, K_{E-W}$

$\Delta T_{END_{N-S}} = 2 \text{ ENDS} \times 6' \times \underset{L_{N-S}}{279.5'} \times 2.2 \frac{K}{FT^2} = 7{,}379 \, K_{N-S}$

(3) FRICTIONAL RESISTANCE ALONG PLANE BC:

ADD WEIGHT OF SILTY CLAY BLOCK BETWEEN BOTTOM OF MAT & TOP OF SILTY SAND / SANDY SILT TO THE NORMAL FORCE AT BOTTOM OF THE MAT.

$\Delta N_{CLAY} = \overset{\Delta H}{6'} \times \overset{\gamma}{0.090 \frac{K}{FT^3}} \times \overset{B}{240'} \times \overset{L}{279.5'} = 36{,}223 K$

(4) SINCE THE MATERIAL FROM GROUND SURFACE TO THE TOP COHESIONLESS SILTY SAND/SANDY SILT ARE ALL COHESIVE (SOIL CEMENT, SILTY CLAY), THE ACTIVE EARTHQUAKE PRESSURE IS SMALL AND NEGLIBLE.

NOTE: FRICTIONAL RESISTANCE WILL BE LOWER WHEN VERT EARTHQUAKE FORCES ACT UPWARD. ∴ CHECK CASES III A, B & C

NOTED JAN 2 1 2000 P.J. Tadey
▲5010.65

3 CALCULATION IDENTIFICATION NUMBER				PAGE 20
J.O. OR W.O. NO. 05996.02	DIVISION & GROUP G(B)	CALCULATION NO. 13-4	OPTIONAL TASK CODE	

SLIDING ON DEEP PLANE

	N-S	VERT	E-W
CASE IIIA:	40% IN X	−100% IN Y	40% IN Z
FROM TABLE 1	0.4×111,108 K	−79,779 K	0.4 × 99,997 = 39,999 K
			L = V_{E-W}

$$\therefore N = \underset{\text{CTB DL}}{97,749} - \underset{F_{VD}\text{ or }E_{QV}}{79,779\,K} + \underset{\Delta N_{CLAY}}{36,223\,K} = 54,193\,K$$

$$N \tan\phi = 54,193\,K \tan 38^\circ = 42,340\,K$$

$$\therefore FS_{SLIDING_{N-S}} = \frac{205.52\,K/LF \times \underset{L_{E-W}}{240'} + 7,379\,K + 42,340\,K}{0.4 \times 111,108\,K} = 1.78$$

$$FS_{SLIDING_{E-W}} = \frac{205.52\,\frac{K}{LF} \times \overset{L}{279.5} + 6336\,K + 42,340\,K}{0.4 \times 99,997\,K} = 1.65 > 1.1$$

∴ OK

	N-S	VERT	E-W
CASE IIIB	40% IN X	−40% IN Y	100% IN Z
FROM TABLE 1	0.4×111,108 K	−0.4×79,779 K	99,997 K
			L = V_{E-W}

$$\therefore N = \underset{\text{CTB DL}}{97,749\,K} - \underset{F_{VD}}{0.4 \times 79,779\,K} + \underset{\Delta N_{CLAY}}{36,223\,K} = 102,060\,K$$

$$\Rightarrow T = \Big(\underset{P_P}{180\,\tfrac{K}{L.F.}} + \underset{57,443}{25.52\,\tfrac{K}{LF.}}\Big) \times \underset{L_{N-S}}{279.5'} + 6,336\,K_{E-W}$$

$$+ \underset{N}{102,060\,K} \tan \underset{\phi}{38^\circ} = 143,517\,K$$

79,738

$$FS = \frac{\text{RESISTING}}{\text{DRIVING}} = \frac{143,517\,K}{99,997\,K} = 1.44 > 1.1$$

∴ OK

SLIDING ON DEEP PLANE

	N-S	VERT	E-W
CASE III C	100% IN X	−40% IN Y	40% IN Z
FROM TABLE 1	111,108 K	−0.4 × 79,779 K	0.4 × 99,997

$$\therefore N = \overset{CTB\ UL}{97,749} - \underset{31,912}{0.4 \times \overset{F_{VD}}{79,779\,K}} + \overset{\Delta N_{CLAY}}{36,223} = 102,060\ K$$

$$T_{N-S} = 205.52 \frac{K}{LF} \times \overset{B}{240'} + \overset{\Delta T_{N-S}}{7,379\,K} + 102,060 \tan 38^\circ = 136,442\ K$$

$$FS_{SLIDING} = \frac{T}{V_{N-S}} = \frac{136,442\ K}{111,108\ K} = 1.23 \quad > 1.1 \therefore OK$$

THE FACTOR OF SAFETY AGAINST SLIDING ON A DEEP PLANE OF COHESIONLESS SOIL IS > 1.1 FOR LOAD CASES III A, III B, & III C. THEREFORE THERE IS NO SLIDING ON A DEEP PLANE OF COHESIONLESS SOIL.

ALLOWABLE BEARING CAPACITY

Bearing capacity calculations are performed using the method for determining general bearing capacity failure, as presented in Winterkorn and Fang (1975. Local bearing capacity (punching shear) failure is ruled out due to the large size of the mat, 240' x 279.5'.

The general bearing capacity equation is a modification of Terzaghi's bearing capacity equation, which was developed for strip footings and which indicates that $q_{ult} = cN_c+qN_q+1/2\ \gamma BN_\gamma$. For this relationship, the ultimate bearing capacity of soil consists of three components: 1) cohesion, 2) surcharge, and 3) friction, which are represented by bearing capacity factors N_c, N_q, and N_γ. Terzaghi's bearing capacity equation has been enhanced by various investigators to incorporate shape, depth, and load inclination factors for different foundation geometries and loads as follows:

$$q_{ult} = c\ N_c\ s_c\ d_c\ i_c + q\ N_q\ s_q\ d_q\ i_q + \tfrac{1}{2}\ \gamma\ B\ N_\gamma\ s_\gamma\ d_\gamma\ i_\gamma$$

where

q_{ult} = ultimate bearing capacity

c = cohesion or undrained strength

q = effective surcharge at bottom of foundation, = γD_f

γ = unit weight of soil

B = foundation width

s_c, s_q, s_γ = shape factors, which are a function of foundation width to length

d_c, d_q, d_γ = depth factors, which account for embedment effects

i_c, i_q, i_γ = load inclination factors

N_c, N_q, N_γ = bearing capacity factors, which are a function of ϕ.

γ in the third term is the unit weight of soil below the foundation, whereas the unit weight of the soil above the bottom of the footing is used in determining q in the second term.

BEARING CAPACITY FACTORS

Bearing capacity factors computed based on relationships proposed by Vesic (1973), which are presented in Chapter 3 of Winterkorn and Fang (1975).

$$N_q = e^{\pi \tan\varphi} \tan^2\left(45 + \frac{\phi}{2}\right)$$

$$N_c = (N_q - 1)\ \cot\phi, \text{ but} = 5.14 \text{ for } \phi = 0.$$

$$N_\gamma = 2\ (N_q + 1)\ \tan\phi$$

SHAPE FACTORS

$$s_c = 1 + \frac{B}{L} \cdot \frac{N_q}{N_c}$$

$$s_q = 1 + \frac{B}{L} \tan\phi$$

$$s_\gamma = 1 - 0.4 \cdot \frac{B}{L}$$

DEPTH FACTORS

For $\frac{D_f}{B} \le 1$:

$$d_c = d_q - \frac{(1 - d_q)}{N_q \cdot \tan\phi} \text{ for } \phi > 0 \text{ and } d_c = 1 + 0.4\left(\frac{D_f}{B}\right) \text{ for } \phi = 0.$$

$$d_q = 1 + 2\tan\phi \cdot (1 - \sin\phi)^2 \cdot \left(\frac{D_f}{B}\right)$$

$$d_\gamma = 1$$

INCLINATION FACTORS

$$i_q = \left(1 - \frac{F_H}{F_V + B'L'c\cot\phi}\right)^m$$

$$i_c = i_q - \frac{(1 - i_q)}{N_c \cdot \tan\phi} \text{ for } \phi > 0 \text{ and } i_c = 1 - \left(\frac{m F_H}{B'L'c N_c}\right) \text{ for } \phi = 0$$

$$i_\gamma = \left(1 - \frac{F_H}{F_V + B'L'c\cot\phi}\right)^{m+1}$$

Where: F_H and F_V are the total horizontal and vertical forces acting on the footing and

$m_B =$ (2 + B/L) / (1 + B/L)

$m_L =$ (2 + L/B) / (1 + L/B)

STATIC BEARING CAPACITY OF THE CANISTER TRANSFER BUILDING

The following pages present the details of the bearing capacity analyses for the static load cases. These cases are identified as follows:

Case IA Static using undrained strength parameters ($\phi = 0°$ & $c = 3.18$ ksf).

Case IB Static using effective-stress strength parameters ($\phi = 30°$ & $c = 0$).

Table 2.6-9 presents the results of the bearing capacity analyses for these static load cases. The minimum factor of safety required for static load cases is 3.

As indicated in this table, the gross allowable bearing pressure for the Canister Transfer Building to obtain a factor of safety of 3.0 against a shear failure from static loads is greater than 6.5 ksf. However, loading the foundation to this value may result in undesirable settlements. This minimum allowable value was obtained in analyses that conservatively assume $\phi = 0°$ and $c = 3.18$ ksf, the average undrained strength for the soils in the upper layer at the site, to model the end of construction. Using the estimated effective-stress strength of $\phi = 30°$ and $c = 0$ results in higher allowable bearing pressures. As shown in Table 2.6-9, the gross allowable bearing capacity of the Canister Transfer Building for static loads for these soil strengths is 56.6 ksf.

ALLOWABLE BEARING CAPACITY OF CANISTER TRANSFER BUILDING

Static Analysis: **Case IA - Static** | **0 % in N-S, 0 % in Vert 0 % in E-W**

Soil Properties:

s_u = **3,180** Average undrained strength (psf) in upper ~30' layer
ϕ = **0** Friction Angle (degrees)
γ = **90** Unit weight of soil (pcf)
γ_{surch} = **80** Unit weight of surcharge (pcf)

Foundation Properties:

B' = **240.0** Footing Width - ft (E-W) L' = **279.5** Length - ft (N-S)
D_f = **5** Depth of Footing (ft)
β = **0.0** Angle of load inclination from vertical (degrees)
FS = **3** Factor of Safety required for $q_{allowable}$.
F_V = **97,749** k EQ_V = **0** k
$EQ_{H\ E\text{-}W}$ = **0** k + $EQ_{H\ N\text{-}S}$ = **0** k = **0** k for F_H

$q_{ult} = c\, N_c\, s_c\, d_c\, i_c + \gamma_{surch}\, D_f\, N_q\, s_q\, d_q\, i_q + 1/2\, \gamma\, B\, N_\gamma\, s_\gamma\, d_\gamma\, i_\gamma$

General Bearing Capacity Equation, based on Winterkorn & Fang (1975)

$N_c = (N_q - 1)\cot(\phi)$, but = 5.14 for $\phi = 0$	=	5.14	Eq 3.6 & Table 3.2
$N_q = e^{\pi \tan\phi} \tan^2(\pi/4 + \phi/2)$	=	1.00	Eq 3.6
$N_\gamma = 2(N_q + 1)\tan(\phi)$	=	0.00	Eq 3.8
$s_c = 1 + (B/L)(N_q/N_c)$	=	1.17	Table 3.2
$s_q = 1 + (B/L)\tan\phi$	=	1.00	"
$s_\gamma = 1 - 0.4\,(B/L)$	=	0.66	"
For $D_f/B \leq 1$: $d_q = 1 + 2\tan\phi\,(1 - \sin\phi)^2\, D_f/B$	=	1.00	Eq 3.26
$d_\gamma = 1$	=	1.00	"
For $\phi > 0$: $d_c = d_q - (1-d_q)/(N_q \tan\phi)$	=	N/A	
For $\phi = 0$: $d_c = 1 + 0.4\,(D_f/B)$	=	1.01	Eq 3.27

No inclined loads; therefore, $i_c = i_q = i_\gamma = 1.0$.

			N_c term		N_q term		N_γ term
Gross q_{ult} =	19,635	psf =	19,235	+	400	+	0

q_{all} = 6,540 psf = q_{ult} / FS

q_{actual} = 1,457 psf = (F_v + EQ_v) / (B' x L')

FS_{actual} = 13.47 = q_{ult} / q_{actual} > 3 **Hence OK**

CALCULATION IDENTIFICATION NUMBER				PAGE 26
J.O. OR W.O. NO.	DIVISION & GROUP	CALCULATION NO.	OPTIONAL TASK CODE	
05996.02	G(B)	13-4	N/A	

ALLOWABLE BEARING CAPACITY OF CANISTER TRANSFER BUILDING

Static Analysis: **Case IB - Static** | **0 % in N-S, 0 % in Vert 0 % in E-W**

Soil Properties:
- s_u = **0** Average undrained strength (psf) in upper ~30' layer
- ϕ = **30** Friction Angle (degrees)
- γ = **90** Unit weight of soil (pcf)
- γ_{surch} = **80** Unit weight of surcharge (pcf)

Foundation Properties:
- B' = **240.0** Footing Width - ft (E-W) L' = **279.5** Length - ft (N-S)
- D_f = **5** Depth of Footing (ft)
- β = **0.0** Angle of load inclination from vertical (degrees)
- FS = **3** Factor of Safety required for $q_{allowable}$.
- F_V = **97,749** k EQ_V = **0** k
- $EQ_{H\ E\text{-}W}$ = **0** k + $EQ_{H\ N\text{-}S}$ = **0** k = **0** k for F_H

$q_{ult} = c\, N_c\, s_c\, d_c\, i_c + \gamma_{surch}\, D_f\, N_q\, s_q\, d_q\, i_q + 1/2\, \gamma\, B\, N_\gamma\, s_\gamma\, d_\gamma\, i_\gamma$ **General Bearing Capacity Equation, based on Winterkorn & Fang (1975)**

$N_c = (N_q - 1)\ \cot(\phi)$, but = 5.14 for $\phi = 0$	=	30.14	Eq 3.6 & Table 3.2
$N_q = e^{\pi \tan\phi}\ \tan^2(\pi/4 + \phi/2)$	=	18.40	Eq 3.6
$N_\gamma = 2\,(N_q + 1)\ \tan(\phi)$	=	22.40	Eq 3.8
$s_c = 1 + (B/L)(N_q/N_c)$	=	1.52	Table 3.2
$s_q = 1 + (B/L)\tan\phi$	=	1.50	"
$s_\gamma = 1 - 0.4\,(B/L)$	=	0.66	"
For $D_f/B \leq 1$: $d_q = 1 + 2\tan\phi\ (1 - \sin\phi)^2\, D_f/B$	=	1.01	Eq 3.26
$d_\gamma = 1$	=	1.00	"
For $\phi > 0$: $d_c = d_q - (1-d_q) / (N_q \tan\phi)$	=	1.01	
For $\phi = 0$: $d_c = 1 + 0.4\,(D_f/B)$	=	N/A	Eq 3.27

No inclined loads; therefore, $i_c = i_q = i_\gamma = 1.0$.

			N_c term		N_q term		N_γ term
Gross q_{ult} =	169,921	psf =	0	+	11,076	+	158,845

q_{all} = 56,640 psf = q_{ult} / FS

q_{actual} = 1,457 psf = $(F_v + EQ_v) / (B' \times L')$

FS_{actual} = 116.61 = q_{ult} / q_{actual} > 3 Hence OK

DYNAMIC BEARING CAPACITY OF THE CANISTER TRANSFER BUILDING

The following pages present the details of the bearing capacity analyses for the dynamic load cases. These analyses use the dynamic loads for the building that were developed in Calculation 05996.02-SC-5, (S&W, 2001). The development of these dynamic loads is described in Section 4.7.1.5.3 of the SAR. As in the structural analyses discussed in SAR Section 4.7.1.5.3., the seismic loads used in these analyses were combined using 100% of the enveloped zero period accelerations (ZPA) in one direction with 40% of the enveloped ZPA in each of the other two directions. The resulting dynamic loading cases are identified as follows:

Case II	100%	N-S direction,	0%	Vertical direction,	100%	E-W direction.
Case IIIA	40%	N-S direction,	-100%	Vertical direction,	40%	E-W direction.
Case IIIB	40%	N-S direction,	-40%	Vertical direction,	100%	E-W direction.
Case IIIC	100%	N-S direction,	-40%	Vertical direction,	40%	E-W direction.
Case IVA	40%	N-S direction,	100%	Vertical direction,	40%	E-W direction.
Case IVB	40%	N-S direction,	40%	Vertical direction,	100%	E-W direction.
Case IVC	100%	N-S direction,	40%	Vertical direction,	40%	E-W direction.

Table 2.6-10 presents the results of the bearing capacity analyses for these cases, which include static loads plus dynamic loads due to the earthquake. Because the *in situ* fine-grained soils are not expected to fully drain during the rapid cycling of load during the earthquake, these cases are analyzed using the average undrained strength applicable for the soils within the upper layer ($\phi = 0°$ and $c = 3.18$ ksf). As indicated above, for these cases including dynamic loads from the design basis ground motion, the minimum acceptable factor of safety is 1.1.

Table 2.6-10 indicates the minimum factor of safety against a dynamic bearing capacity failure was obtained for Load Case II, the load combination of full static, 100% of the seismic forces acting in the N-S direction and the E-W direction and 0% in the upward direction. This load case resulted in an actual soil bearing pressure of 2.4 ksf, compared with an ultimate bearing capacity of 13.2 ksf. The resulting factor of safety against a bearing capacity failure for this load case is ~5.5, which is much greater than 1.1, the minimum allowable factor of safety for seismic loading cases. In these analyses, no credit was taken for the fact that strength of cohesive soil increases as the rate of loading increases. Therefore, the Canister Transfer Building has an adequate factor of safety against a dynamic bearing capacity failure.

CALCULATION IDENTIFICATION NUMBER				PAGE 28
J.O. OR W.O. NO.	DIVISION & GROUP	CALCULATION NO.	OPTIONAL TASK CODE	
05996.02	G(B)	13-4	N/A	

ALLOWABLE BEARING CAPACITY OF CANISTER TRANSFER BUILDING

PSHA 2,000-Yr Earthquake: Case II — **100 % in N-S, 0 % in Vert 100 % in E-W**

Soil Properties:

s_u = **3,180** Average undrained strength (psf) in upper ~30' layer
ϕ = **0** Friction Angle (degrees)
γ = **90** Unit weight of soil (pcf)
γ_{surch} = **80** Unit weight of surcharge (pcf)

Foundation Properties:

B' = **184.6** Footing Width - ft (E-W) L' = **221.2** Length - ft (N-S)
D_f = **5** Depth of Footing (ft)
β = **45.7** Angle of load inclination from vertical (degrees)
FS = **1.1** Factor of Safety required for $q_{allowable}$.
F_V = **97,749** k EQ_V = **0** k
$EQ_{H\,E\text{-}W}$ = **99,997** k + $EQ_{H\,N\text{-}S}$ = **111,108** k = **149,480** k for F_H

$q_{ult} = c\,N_c\,s_c\,d_c\,i_c + \gamma_{surch}\,D_f\,N_q\,s_q\,d_q\,i_q + 1/2\,\gamma\,B\,N_\gamma\,s_\gamma\,d_\gamma\,i_\gamma$ — **General Bearing Capacity Equation, based on Winterkorn & Fang (1975)**

$N_c = (N_q - 1)\cot(\phi)$, but = 5.14 for $\phi = 0$	=	5.14	Eq 3.6 & Table 3.2
$N_q = e^{\pi \tan\phi} \tan^2(\pi/4 + \phi/2)$	=	1.00	Eq 3.6
$N_\gamma = 2\,(N_q + 1)\tan(\phi)$	=	0.00	Eq 3.8
$s_c = 1 + (B/L)(N_q/N_c)$	=	1.16	Table 3.2
$s_q = 1 + (B/L)\tan\phi$	=	1.00	"
$s_\gamma = 1 - 0.4\,(B/L)$	=	0.67	"
For $D_f/B \le 1$: $d_q = 1 + 2\tan\phi\,(1 - \sin\phi)^2\,D_f/B$	=	1.00	Eq 3.26
$d_\gamma = 1$	=	1.00	"
For $\phi > 0$: $d_c = d_q - (1-d_q)/(N_q\tan\phi)$	=	N/A	
For $\phi = 0$: $d_c = 1 + 0.4\,(D_f/B)$	=	1.01	Eq 3.27
$m_B = (2 + B/L)/(1 + B/L)$	=	1.54	Eq 3.18a
$m_L = (2 + L/B)/(1 + L/B)$	=	1.46	Eq 3.18b
If $EQ_{H\,N\text{-}S} > 0$: $\theta_n = \tan^{-1}(EQ_{H\,E\text{-}W}/EQ_{H\,N\text{-}S})$	=	0.73 rad	
$m_n = m_L\cos^2\theta_n + m_B\sin^2\theta_n$	=	1.50	Eq 3.18c
For $\phi = 0$: $i_c = 1 - (m\,F_H/B'\,L'\,c\,N_c)$	=	0.66	Eq 3.16a
$i_q = \{1 - F_H/[(F_v + EQ_v) + B'\,L'\,c\cot\phi]\}^m$	=	1.00	Eq 3.14a
$i_\gamma = \{1 - F_H/[(F_v + EQ_v) + B'\,L'\,c\cot\phi]\}^{m+1}$	=	0.00	Eq 3.17a

			N_c term		N_q term		N_γ term
Gross q_{ult} =	13,171	psf =	12,771	+	400	+	0

q_{all} = 11,970 psf = q_{ult} / FS

q_{actual} = 2,394 psf = $(F_v + EQ_v)/(B' \times L')$

FS_{actual} = 5.50 = q_{ult}/q_{actual} > 1.1 Hence OK

ALLOWABLE BEARING CAPACITY OF CANISTER TRANSFER BUILDING

PSHA 2,000-Yr Earthquake: Case IIIA — **40 % in N-S, -100 % in Vert . 40 % in E-W**

Soil Properties:

s_u = **3,180** Average undrained strength (psf) in upper ~30' layer

ϕ = **0** Friction Angle (degrees)

γ = **90** Unit weight of soil (pcf)

γ_{surch} = **80** Unit weight of surcharge (pcf)

Foundation Properties:

B' = **119.5** Footing Width - ft (E-W) L' = **152.6** Length - ft (N-S)

D_f = **5** Depth of Footing (ft)

β = **65.8** Angle of load inclination from vertical (degrees)

FS = **1.1** Factor of Safety required for $q_{allowable}$.

F_V = **97,749** k EQ_V = **-79,779** k

$EQ_{H\,E\text{-}W}$ = **39,999** k + $EQ_{H\,N\text{-}S}$ = **44,443** k = **59,792** k for F_H

$q_{ult} = c\,N_c\,s_c\,d_c\,i_c + \gamma_{surch}\,D_f\,N_q\,s_q\,d_q\,i_q + 1/2\,\gamma\,B\,N_\gamma\,s_\gamma\,d_\gamma\,i_\gamma$ — **General Bearing Capacity Equation, based on Winterkorn & Fang (1975)**

$N_c = (N_q - 1)\cot(\phi)$, but = 5.14 for $\phi = 0$	=	5.14	Eq 3.6 & Table 3.2
$N_q = e^{\pi \tan\phi} \tan^2(\pi/4 + \phi/2)$	=	1.00	Eq 3.6
$N_\gamma = 2(N_q + 1)\tan(\phi)$	=	0.00	Eq 3.8
$s_c = 1 + (B/L)(N_q/N_c)$	=	1.15	Table 3.2
$s_q = 1 + (B/L)\tan\phi$	=	1.00	"
$s_\gamma = 1 - 0.4\,(B/L)$	=	0.69	"
For $D_f/B \le 1$: $d_q = 1 + 2\tan\phi\,(1 - \sin\phi)^2\,D_f/B$	=	1.00	Eq 3.26
$d_\gamma = 1$	=	1.00	"
For $\phi > 0$: $d_c = d_q - (1-d_q)/(N_q\tan\phi)$	=	N/A	
For $\phi = 0$: $d_c = 1 + 0.4\,(D_f/B)$	=	1.02	Eq 3.27
$m_B = (2 + B/L)/(1 + B/L)$	=	1.54	Eq 3.18a
$m_L = (2 + L/B)/(1 + L/B)$	=	1.46	Eq 3.18b
If $EQ_{H\,N\text{-}S} > 0$: $\theta_n = \tan^{-1}(EQ_{H\,E\text{-}W}/EQ_{H\,N\text{-}S})$	=	0.73 rad	
$m_n = m_L\cos^2\theta_n + m_B\sin^2\theta_n$	=	1.50	Eq 3.18c
For $\phi = 0$: $i_c = 1 - (m\,F_H/B'\,L'\,c\,N_c)$	=	0.70	Eq 3.16a
$i_q = \{1 - F_H/[(F_v + EQ_v) + B'\,L'\,c\cot\phi]\}^m$	=	1.00	Eq 3.14a
$i_\gamma = \{1 - F_H/[(F_v + EQ_v) + B'\,L'\,c\cot\phi]\}^{m+1}$	=	0.00	Eq 3.17a

			N_c term		N_q term		N_γ term
Gross q_{ult} =	13,804	psf =	13,404	+	400	+	0

q_{all} = 12,540 psf = q_{ult} / FS

q_{actual} = 985 psf = $(F_v + EQ_v)/(B' \times L')$

FS_{actual} = 14.01 = q_{ult}/q_{actual} > 1.1 **Hence OK**

CALCULATION IDENTIFICATION NUMBER				PAGE 30
J.O. OR W.O. NO.	DIVISION & GROUP	CALCULATION NO.	OPTIONAL TASK CODE	
05996.02	G(B)	13-4	N/A	

ALLOWABLE BEARING CAPACITY OF CANISTER TRANSFER BUILDING

PSHA 2,000-Yr Earthquake: Case IIIB — **40 % in N-S, -40 % in Vert 100 % in E-W**

Soil Properties:

s_u = **3,180** Average undrained strength (psf) in upper ~30' layer
ϕ = **0** Friction Angle (degrees)
γ = **90** Unit weight of soil (pcf)
γ_{surch} = **80** Unit weight of surcharge (pcf)

Foundation Properties:

B' = **157.8** Footing Width - ft (E-W) L' = **244.9** Length - ft (N-S)
D_f = **5** Depth of Footing (ft)
β = **56.6** Angle of load inclination from vertical (degrees)
FS = **1.1** Factor of Safety required for $q_{allowable}$.
F_V = **97,749** k EQ_V = **-31,912** k
$EQ_{H\,E\text{-}W}$ = **99,997** k + $EQ_{H\,N\text{-}S}$ = **44,443** k = **109,429** k for F_H

$q_{ult} = c\,N_c\,s_c\,d_c\,i_c + \gamma_{surch}\,D_f\,N_q\,s_q\,d_q\,i_q + 1/2\,\gamma\,B\,N_\gamma\,s_\gamma\,d_\gamma\,i_\gamma$ — **General Bearing Capacity Equation, based on Winterkorn & Fang (1975)**

$N_c = (N_q - 1)\cot(\phi)$, but = 5.14 for $\phi = 0$	=	5.14	Eq 3.6 & Table 3.2
$N_q = e^{\pi \tan\phi} \tan^2(\pi/4 + \phi/2)$	=	1.00	Eq 3.6
$N_\gamma = 2\,(N_q + 1)\tan(\phi)$	=	0.00	Eq 3.8
$s_c = 1 + (B/L)(N_q/N_c)$	=	1.13	Table 3.2
$s_q = 1 + (B/L)\tan\phi$	=	1.00	"
$s_\gamma = 1 - 0.4\,(B/L)$	=	0.74	"
For $D_f/B \le 1$: $d_q = 1 + 2\tan\phi\,(1 - \sin\phi)^2\,D_f/B$	=	1.00	Eq 3.26
$d_\gamma = 1$	=	1.00	"
For $\phi > 0$: $d_c = d_q - (1-d_q)/(N_q\tan\phi)$	=	N/A	
For $\phi = 0$: $d_c = 1 + 0.4\,(D_f/B)$	=	1.01	Eq 3.27
$m_B = (2 + B/L)/(1 + B/L)$	=	1.54	Eq 3.18a
$m_L = (2 + L/B)/(1 + L/B)$	=	1.46	Eq 3.18b
If $EQ_{H\,N\text{-}S} > 0$: $\theta_n = \tan^{-1}(EQ_{H\,E\text{-}W}/EQ_{H\,N\text{-}S})$	=	1.15 rad	
$m_n = m_L\cos^2\theta_n + m_B\sin^2\theta_n$	=	1.53	Eq 3.18c
For $\phi = 0$: $i_c = 1 - (m\,F_H/B'\,L'\,c\,N_c)$	=	0.74	Eq 3.16a
$i_q = \{1 - F_H/[(F_v + EQ_v) + B'\,L'\,c\cot\phi]\}^m$	=	1.00	Eq 3.14a
$i_\gamma = \{1 - F_H/[(F_v + EQ_v) + B'\,L'\,c\cot\phi]\}^{m+1}$	=	0.00	Eq 3.17a

			N_c term		N_q term		N_γ term
Gross q_{ult} =	14,103	psf =	13,703	+	400	+	0

q_{all} = 12,820 psf = q_{ult} / FS

q_{actual} = 1,704 psf = $(F_v + EQ_v)/(B' \times L')$

FS_{actual} = 8.28 = q_{ult}/q_{actual} > 1.1 Hence OK

CALCULATION IDENTIFICATION NUMBER				PAGE 31
J.O. OR W.O. NO.	DIVISION & GROUP	CALCULATION NO.	OPTIONAL TASK CODE	
05996.02	G(B)	13-4	N/A	

ALLOWABLE BEARING CAPACITY OF CANISTER TRANSFER BUILDING

PSHA 2,000-Yr Earthquake: Case IIIC — **100 % in N-S, -40 % in Vert 40 % in E-W**

Soil Properties:

s_u = **3,180** Average undrained strength (psf) in upper ~30' layer
ϕ = **0** Friction Angle (degrees)
γ = **90** Unit weight of soil (pcf)
γ_{surch} = **80** Unit weight of surcharge (pcf)

Foundation Properties:

B' = **207.1** Footing Width - ft (E-W) L' = **192.9** Length - ft (N-S)
D_f = **5** Depth of Footing (ft)
β = **31.3** Angle of load inclination from vertical (degrees)
FS = **1.1** Factor of Safety required for $q_{allowable}$.
F_V = **97,749** k EQ_V = **-31,912** k
$EQ_{H\ E\text{-}W}$ = **39,999** k + $EQ_{H\ N\text{-}S}$ = **111,108** k = **118,088** k for F_H

$q_{ult} = c\, N_c\, s_c\, d_c\, i_c + \gamma_{surch}\, D_f\, N_q\, s_q\, d_q\, i_q + 1/2\, \gamma\, B\, N_\gamma\, s_\gamma\, d_\gamma\, i_\gamma$ — **General Bearing Capacity Equation, based on Winterkorn & Fang (1975)**

$N_c = (N_q - 1)\cot(\phi)$, but = 5.14 for $\phi = 0$	=	5.14	Eq 3.6 & Table 3.2
$N_q = e^{\pi \tan\phi} \tan^2(\pi/4 + \phi/2)$	=	1.00	Eq 3.6
$N_\gamma = 2(N_q + 1)\tan(\phi)$	=	0.00	Eq 3.8
$s_c = 1 + (B/L)(N_q/N_c)$	=	1.21	Table 3.2
$s_q = 1 + (B/L)\tan\phi$	=	1.00	"
$s_\gamma = 1 - 0.4\,(B/L)$	=	0.57	"
For $D_f/B \le 1$: $d_q = 1 + 2\tan\phi\,(1 - \sin\phi)^2\, D_f/B$	=	1.00	Eq 3.26
$d_\gamma = 1$	=	1.00	"
For $\phi > 0$: $d_c = d_q - (1 - d_q)/(N_q \tan\phi)$	=	N/A	
For $\phi = 0$: $d_c = 1 + 0.4\,(D_f/B)$	=	1.01	Eq 3.27
$m_B = (2 + B/L)/(1 + B/L)$	=	1.54	Eq 3.18a
$m_L = (2 + L/B)/(1 + L/B)$	=	1.46	Eq 3.18b
If $EQ_{H\ N\text{-}S} > 0$: $\theta_n = \tan^{-1}(EQ_{H\ E\text{-}W} / EQ_{H\ N\text{-}S})$	=	0.35 rad	
$m_n = m_L \cos^2\theta_n + m_B \sin^2\theta_n$	=	1.47	Eq 3.18c
For $\phi = 0$: $i_c = 1 - (m\, F_H / B'\, L'\, c\, N_c)$	=	0.73	Eq 3.16a
$i_q = \{1 - F_H / [(F_v + EQ_v) + B'\, L'\, c \cot\phi]\}^m$	=	1.00	Eq 3.14a
$i_\gamma = \{1 - F_H / [(F_v + EQ_v) + B'\, L'\, c \cot\phi]\}^{m+1}$	=	0.00	Eq 3.17a

			N_c term		N_q term		N_γ term
Gross q_{ult} =	15,045	psf =	14,645	+	400	+	0

q_{all} = 13,670 psf = q_{ult} / FS

q_{actual} = 1,648 psf = $(F_v + EQ_v)/(B' \times L')$

FS_{actual} = 9.13 = q_{ult} / q_{actual} > 1.1 **Hence OK**

[geot]\05996\calc\brng_cap\can_xfr.xls

ALLOWABLE BEARING CAPACITY OF CANISTER TRANSFER BUILDING

PSHA 2,000-Yr Earthquake: Case IVA — **40 % in N-S, 100 % in Vert 40 % in E-W**

Soil Properties:

s_u = **3,180** Average undrained strength (psf) in upper ~30' layer
ϕ = **0** Friction Angle (degrees)
γ = **90** Unit weight of soil (pcf)
γ_{surch} = **80** Unit weight of surcharge (pcf)

Foundation Properties:

B' = **227.8** Footing Width - ft (E-W) L' = **266.7** Length - ft (N-S)
D_f = **5** Depth of Footing (ft)
β = **12.7** Angle of load inclination from vertical (degrees)
FS = **1.1** Factor of Safety required for $q_{allowable}$.
F_V = **97,749** k EQ_V = **79,779** k
$EQ_{H\,E\text{-}W}$ = **39,999** k + $EQ_{H\,N\text{-}S}$ = **44,443** k = **59,792** k for F_H

$q_{ult} = c\,N_c\,s_c\,d_c\,i_c + \gamma_{surch}\,D_f\,N_q\,s_q\,d_q\,i_q + 1/2\,\gamma\,B\,N_\gamma\,s_\gamma\,d_\gamma\,i_\gamma$ **General Bearing Capacity Equation, based on Winterkorn & Fang (1975)**

$N_c = (N_q - 1)\cot(\phi)$, but = 5.14 for $\phi = 0$	=	5.14	Eq 3.6 & Table 3.2
$N_q = e^{\pi \tan\phi} \tan^2(\pi/4 + \phi/2)$	=	1.00	Eq 3.6
$N_\gamma = 2\,(N_q + 1)\tan(\phi)$	=	0.00	Eq 3.8
$s_c = 1 + (B/L)(N_q/N_c)$	=	1.17	Table 3.2
$s_q = 1 + (B/L)\tan\phi$	=	1.00	"
$s_\gamma = 1 - 0.4\,(B/L)$	=	0.66	"
For $D_f/B \le 1$: $d_q = 1 + 2\tan\phi\,(1 - \sin\phi)^2\,D_f/B$	=	1.00	Eq 3.26
$d_\gamma = 1$	=	1.00	"
For $\phi > 0$: $d_c = d_q - (1-d_q)/(N_q\tan\phi)$	=	N/A	
For $\phi = 0$: $d_c = 1 + 0.4\,(D_f/B)$	=	1.01	Eq 3.27
$m_B = (2 + B/L)/(1 + B/L)$	=	1.54	Eq 3.18a
$m_L = (2 + L/B)/(1 + L/B)$	=	1.46	Eq 3.18b
If $EQ_{H\,N\text{-}S} > 0$: $\theta_n = \tan^{-1}(EQ_{H\,E\text{-}W}/EQ_{H\,N\text{-}S})$	=	0.73 rad	
$m_n = m_L\cos^2\theta_n + m_B\sin^2\theta_n$	=	1.50	Eq 3.18c
For $\phi = 0$: $i_c = 1 - (m\,F_H/B'\,L'\,c\,N_c)$	=	0.91	Eq 3.16a
$i_q = \{1 - F_H/[(F_v + EQ_v) + B'\,L'\,c\cot\phi]\}^m$	=	1.00	Eq 3.14a
$i_\gamma = \{1 - F_H/[(F_v + EQ_v) + B'\,L'\,c\cot\phi]\}^{m+1}$	=	0.00	Eq 3.17a

			N_c term		N_q term		N_γ term
Gross q_{ult} =	17,897	psf =	17,497	+	400	+	0

q_{all} = 16,260 psf = q_{ult} / FS

q_{actual} = 2,923 psf = $(F_v + EQ_v)/(B' \times L')$

FS_{actual} = 6.12 = q_{ult}/q_{actual} > 1.1 **Hence OK**

ALLOWABLE BEARING CAPACITY OF CANISTER TRANSFER BUILDING

PSHA 2,000-Yr Earthquake: Case IVB — **40 % in N-S, 40 % in Vert 100 % in E-W**

Soil Properties:

s_u =	**3,180**	Average undrained strength (psf) in upper ~30' layer	
ϕ =	**0**	Friction Angle (degrees)	
γ =	**90**	Unit weight of soil (pcf)	
γ_{surch} =	**80**	Unit weight of surcharge (pcf)	

Foundation Properties:

B' =	**198.2**	Footing Width - ft (E-W)	L' = **261.9** Length - ft (N-S)
D_f =	**5**	Depth of Footing (ft)	
β =	**37.6**	Angle of load inclination from vertical (degrees)	
FS =	**1.1**	Factor of Safety required for $q_{allowable}$.	

F_V = **97,749** k EQ_V = **31,912** k

$EQ_{H\,E\text{-}W}$ = **99,997** k + $EQ_{H\,N\text{-}S}$ = **44,443** k = **109,429** k for F_H

$q_{ult} = c\,N_c\,s_c\,d_c\,i_c + \gamma_{surch}\,D_f\,N_q\,s_q\,d_q\,i_q + 1/2\,\gamma\,B\,N_\gamma\,s_\gamma\,d_\gamma\,i_\gamma$ — **General Bearing Capacity Equation, based on Winterkorn & Fang (1975)**

$N_c = (N_q - 1)\cot(\phi)$, but = 5.14 for $\phi = 0$	=	5.14	Eq 3.6 & Table 3.2
$N_q = e^{\pi \tan\phi} \tan^2(\pi/4 + \phi/2)$	=	1.00	Eq 3.6
$N_\gamma = 2\,(N_q + 1)\tan(\phi)$	=	0.00	Eq 3.8
$s_c = 1 + (B/L)(N_q/N_c)$	=	1.15	Table 3.2
$s_q = 1 + (B/L)\tan\phi$	=	1.00	"
$s_\gamma = 1 - 0.4\,(B/L)$	=	0.70	"
For $D_f/B \le 1$: $d_q = 1 + 2\tan\phi\,(1 - \sin\phi)^2\,D_f/B$	=	1.00	Eq 3.26
$d_\gamma = 1$	=	1.00	"
For $\phi > 0$: $d_c = d_q - (1-d_q)/(N_q\tan\phi)$	=	N/A	
For $\phi = 0$: $d_c = 1 + 0.4\,(D_f/B)$	=	1.01	Eq 3.27
$m_B = (2 + B/L)/(1 + B/L)$	=	1.54	Eq 3.18a
$m_L = (2 + L/B)/(1 + L/B)$	=	1.46	Eq 3.18b
If $EQ_{H\,N\text{-}S} > 0$: $\theta_n = \tan^{-1}(EQ_{H\,E\text{-}W}/EQ_{H\,N\text{-}S})$	=	1.15 rad	
$m_n = m_L\cos^2\theta_n + m_B\sin^2\theta_n$	=	1.53	Eq 3.18c
For $\phi = 0$: $i_c = 1 - (m\,F_H/B'\,L'\,c\,N_c)$	=	0.80	Eq 3.16a
$i_q = \{1 - F_H/[(F_v + EQ_v) + B'\,L'\,c\cot\phi]\}^m$	=	1.00	Eq 3.14a
$i_\gamma = \{1 - F_H/[(F_v + EQ_v) + B'\,L'\,c\cot\phi]\}^{m+1}$	=	0.00	Eq 3.17a

			N_c term		N_q term		N_γ term
Gross q_{ult} =	15,616	psf =	15,216	+	400	+	0

q_{all} = 14,190 psf = q_{ult} / FS

q_{actual} = 2,497 psf = $(F_v + EQ_v)/(B' \times L')$

FS_{actual} = 6.25 = q_{ult}/q_{actual} > 1.1 **Hence OK**

ALLOWABLE BEARING CAPACITY OF CANISTER TRANSFER BUILDING

PSHA 2,000-Yr Earthquake: Case IVC | **100 % in N-S, 40 % in Vert 40 % in E-W**

Soil Properties:

s_u = **3,180** Average undrained strength (psf) in upper ~30' layer

ϕ = **0** Friction Angle (degrees)

γ = **90** Unit weight of soil (pcf)

γ_{surch} = **80** Unit weight of surcharge (pcf)

Foundation Properties:

B' = **223.3** Footing Width - ft (E-W) L' = **235.5** Length - ft (N-S)

D_f = **5** Depth of Footing (ft)

β = **17.1** Angle of load inclination from vertical (degrees)

FS = **1.1** Factor of Safety required for $q_{allowable}$.

F_V = **97,749** k EQ_V = **31,912** k

$EQ_{H\,E\text{-}W}$ = **39,999** k + $EQ_{H\,N\text{-}S}$ = **111,108** k = **118,088** k for F_H

$q_{ult} = c\,N_c\,s_c\,d_c\,i_c + \gamma_{surch}\,D_f\,N_q\,s_q\,d_q\,i_q + 1/2\,\gamma\,B\,N_\gamma\,s_\gamma\,d_\gamma\,i_\gamma$

General Bearing Capacity Equation, based on Winterkorn & Fang (1975)

$N_c = (N_q - 1)\cot(\phi)$, but = 5.14 for $\phi = 0$	=	5.14	Eq 3.6 & Table 3.2
$N_q = e^{\pi \tan\phi} \tan^2(\pi/4 + \phi/2)$	=	1.00	Eq 3.6
$N_\gamma = 2\,(N_q + 1)\tan(\phi)$	=	0.00	Eq 3.8
$s_c = 1 + (B/L)(N_q/N_c)$	=	1.18	Table 3.2
$s_q = 1 + (B/L)\tan\phi$	=	1.00	"
$s_\gamma = 1 - 0.4\,(B/L)$	=	0.62	"
For $D_f/B \le 1$: $d_q = 1 + 2\tan\phi\,(1 - \sin\phi)^2\,D_f/B$	=	1.00	Eq 3.26
$d_\gamma = 1$	=	1.00	"
For $\phi > 0$: $d_c = d_q - (1-d_q)/(N_q\tan\phi)$	=	N/A	
For $\phi = 0$: $d_c = 1 + 0.4\,(D_f/B)$	=	1.01	Eq 3.27
$m_B = (2 + B/L)/(1 + B/L)$	=	1.54	Eq 3.18a
$m_L = (2 + L/B)/(1 + L/B)$	=	1.46	Eq 3.18b
If $EQ_{H\,N\text{-}S} > 0$: $\theta_n = \tan^{-1}(EQ_{H\,E\text{-}W}/EQ_{H\,N\text{-}S})$	=	0.35 rad	
$m_n = m_L\cos^2\theta_n + m_B\sin^2\theta_n$	=	1.47	Eq 3.18c
For $\phi = 0$: $i_c = 1 - (m\,F_H/B'\,L'\,c\,N_c)$	=	0.80	Eq 3.16a
$i_q = \{1 - F_H/[(F_v + EQ_v) + B'\,L'\,c\cot\phi]\}^m$	=	1.00	Eq 3.14a
$i_\gamma = \{1 - F_H/[(F_v + EQ_v) + B'\,L'\,c\cot\phi]\}^{m+1}$	=	0.00	Eq 3.17a

			N_c term		N_q term		N_γ term
Gross q_{ult} =	15,987	psf =	15,587	+	400	+	0

q_{all} = 14,530 psf = q_{ult} / FS

q_{actual} = 2,465 psf = $(F_v + EQ_v)/(B' \times L')$

FS_{actual} = 6.49 = q_{ult}/q_{actual} > 1.1 **Hence OK**

[geot]\05996\calc\brng_cap\can_xfr.xls

CONCLUSIONS

OVERTURNING STABILITY OF THE CANISTER TRANSFER BUILDING

The overturning stability of the Canister Transfer Building is analyzed on Pages 11 to 13 using the dynamic loads for the building due to the PSHA 2,000-yr return period earthquake. These loads, listed in Table 2.6-11, were developed based on the dynamic analysis performed in Calculation 05996.02-SC-5 (S&W, 2001) and are described in SAR Section 4.7.1.5.3. This calculation demonstrates that the factor of safety against overturning of the Canister transfer Building is > 1.1; therefore, the Canister Transfer Building has an adequate factor of safety against overturning due to dynamic loadings from the design basis ground motion.

SLIDING STABILITY OF THE CANISTER TRANSFER BUILDING

The Canister Transfer Building (CTB) will be founded on clayey soils. The sliding stability of the CTB was evaluated using the loads developed in Calculation 05996.02-SC-5 (S&W, 2001). The static strength of the clayey soils at the bottom of the CTB mat was based on the average of two sets of direct shear tests performed on samples of soils obtained from beneath the Canister Transfer Building at the elevation proposed for founding the mat.

The results of the sliding stability analysis are presented in Table 2.6-13 of this calculation, and they indicate that for all load combinations examined, the factors of safety were acceptable. The lowest factor of safety was 1.13, which applies for Case IIIC, where 100% of the dynamic earthquake forces act in the N-S direction and 40% act in the other two directions. These results assume that only one-half of the passive pressures are available resist sliding and no credit is taken for the fact that the strength of cohesive soils increases as the rate of loading increases (Schimming et al, 1966, Casagrande and Shannon, 1948, and Das, 1993); therefore, they represent a conservative lower-bound value of the sliding stability of the Canister Transfer Building founded on in situ silty clay/clayey silt with 5 ft of soil cement backfill around the foundation.

The Canister Transfer Building will be founded on clayey soils that have an adequate amount of cohesive strength to resist sliding due to the dynamic forces from the design basis ground motion. As shown in SAR Figures 2.6-21 through 2.6-23, however, some of the soils underlying the building are cohesionless within the depth zone of about 10 to 20 ft, especially near the southern portion of the building. Simplified analyses were performed to address the possibility that sliding may occur along a deeper slip plane at the clayey soil/sandy soil interface as a result of the earthquake forces.

These analyses included the passive resistance acting on a plane extending from grade down to the top of the cohesionless layer, plus the frictional resistance available along the top of the cohesionless layer. The weight of the clayey soils existing between the top of the cohesionless soils and the bottom of the mat was included in the normal force used to calculate the frictional resistance acting along the top of the cohesionless layer. The factor of safety against sliding along the top of this layer was found to be >1.1 for all of the

dynamic load cases; therefore, there is an adequate factor of safety against sliding along the surface of the cohesionless soils underlying the Canister Transfer Building.

BEARING CAPACITY

STATIC BEARING CAPACITY OF THE CANISTER TRANSFER BUILDING

Table 2.6-9 presents the results of the bearing capacity analyses for the following static load cases. The minimum factor of safety required for static load cases is 3.

Case IA Static using undrained strength parameters ($\phi = 0°$ & $c = 3.18$ ksf).

Case IB Static using effective-stress strength parameters ($\phi = 30°$ & $c = 0$).

As indicated in this table, the gross allowable bearing pressure for the Canister Transfer Building to obtain a factor of safety of 3.0 against a shear failure from static loads is greater than 6.5 ksf. However, loading the foundation to this value may result in undesirable settlements. This minimum allowable value was obtained in analyses that conservatively assume $\phi = 0°$ and $c = 3.18$ ksf, the average undrained strength for the soils in the upper layer at the site, to model the end of construction. Using the estimated effective-stress strength of $\phi = 30°$ and $c = 0$ results in higher allowable bearing pressures. As shown in Table 2.6-9, the gross allowable bearing capacity of the Canister Transfer Building for static loads for these soil strengths is 56.6 ksf.

DYNAMIC BEARING CAPACITY OF THE CANISTER TRANSFER BUILDING

The dynamic bearing capacity was analyzed using the dynamic loads for the building that were developed in Calculation 05996.02-SC-5, (S&W, 2001). The development of these dynamic loads is described in SAR Section 4.7.1.5.3. As in the structural analyses discussed in Section 4.7.1.5.3., the seismic loads used in these analyses were combined using 100% of the enveloped zero period accelerations (ZPA) in one direction with 40% of the enveloped ZPA in each of the other two directions.

Table 2.6-10 presents the results of the bearing capacity analyses for the following cases, which include static loads plus dynamic loads due to the earthquake. The minimum factor of safety required for dynamic load cases is 1.1.

Case II	100%	N-S direction,	0%	Vertical direction,	100%	E-W direction.
Case IIIA	40%	N-S direction,	-100%	Vertical direction,	40%	E-W direction.
Case IIIB	40%	N-S direction,	-40%	Vertical direction,	100%	E-W direction.
Case IIIC	100%	N-S direction,	-40%	Vertical direction,	40%	E-W direction.
Case IVA	40%	N-S direction,	100%	Vertical direction,	40%	E-W direction.
Case IVB	40%	N-S direction,	40%	Vertical direction,	100%	E-W direction.
Case IVC	100%	N-S direction,	40%	Vertical direction,	40%	E-W direction.

Table 2.6-10 indicates the minimum factor of safety against a dynamic bearing capacity failure was obtained for Load Case II, the load combination of full static, 100% of the seismic forces acting in the N-S direction and the E-W direction and 0% in the upward direction. This load case resulted in an actual soil bearing pressure of 2.4 ksf, compared with an ultimate bearing capacity of 13.2 ksf. The resulting factor of safety against a bearing capacity failure for this load case is ~5.5, which is much greater than 1.1, the minimum allowable factor of safety for seismic loading cases. In these analyses, no credit was taken for the fact that strength of cohesive soil increases as the rate of loading increases. Therefore, the Canister Transfer Building has an adequate factor of safety against a dynamic bearing capacity failure

REFERENCES

ASCE 4-86, Seismic Analysis of Safety-Related Nuclear Structures and Commentary on Standard for Seismic Analysis of Safety-Related Nuclear Structures, American Society of Civil Engineers, 1986.

Casagrande, A. and W.L. Shannon, 1948. "Strength of Soils under Dynamic Loads," Transactions, ASCE, Vol. 74, No.4, April, pp. 591-608.

ConeTec, 1999, Cone penetration testing report, Private Fuel Storage Facility, prepared for Stone and Webster Engineering Corp., Denver, CO, 2 volumes.

Das, B. M., 1993, Principles of Soil Dynamics, PWS-Kent, Boston, MA, 570 pp.

Geomatrix Consultants, Inc, 2001, "Development of Design Ground Motions for the Private Fuel Storage Facility, Skull Valley, UT," prepared for Stone and Webster Engineering Corp, Denver, CO, March.

Lambe, T.W., and R.V. Whitman, 1969, Soil Mechanics, John Wiley & Sons, Inc., N.Y., 553 pp.

Newmark, N.M., 1965. Fifth Rankine Lecture: "Effects of Earthquakes on Dams and Embankments". Geotechnique, Institution of Civil Engineers, London. pp. 139-60.

Schimming, B.B., H.J. Haas, and H.C. Saxe, 1966. Study and Dynamic and Static Envelopes. Journal of Soil Mechanics and Foundation Division, ASCE Vol. 92, No. SM2 (March), pp. 105-24.

SWEC, 1999a. Development of Soil Impedance Functions for Canister Transfer Building. Calculation No. 05996.02-SC-04, Revision 1, Stone & Webster Engineering Corporation.

SWEC, 1999b. Seismic Analysis of Canister Transfer Building. Calculation No. 05996.02-SC-05, Revision 1, Stone & Webster Engineering Corporation.

SWEC, 2000, Calculation No. 05996.02- G(B)-4, Revision 5, Stability Analyses of Storage Pad, Stone & Webster Engineering Corporation.

SWEC, 2000a, Calculation No. 05996.02-G(B)-5, Revision 2, "Document Bases for Geotechnical Parameters Provided in Geotechnical Design Criteria," Stone & Webster Engineering Corporation, Boston, MA.

S&W, 2001. Seismic Analysis of Canister Transfer Building. Calculation No. 05996.02-SC-5, Revision 2, Stone & Webster, Inc.

Vesic, A. S., 1973, "Analysis of Ultimate Loads on Shallow Foundations," *Journal of the Soil Mechanics and Foundations Division*, ASCE, Vol 99, No. SM1, pp 45-73.

Winterkorn, H. F., and Fang, H., 1975, Foundation Engineering Handbook, Van Nostrand Reinhold Co., New York, NY.

TABLE 2.6-9

SUMMARY - ALLOWABLE BEARING CAPACITY OF CANISTER TRANSFER BUILDING

Based on Static Loads

Case	F_V k	$EQ_{H\,N\text{-}S}$ k	$EQ_{H\,E\text{-}W}$ k	$\Sigma M_{@N\text{-}S}$ ft-k	$\Sigma M_{@E\text{-}W}$ ft-k	β_B $EQ_{H\,E\text{-}W}$ deg	β_L $EQ_{H\,N\text{-}S}$ deg	GROSS q_{ult} ksf	GROSS q_{all} ksf	e_B ft	e_L ft	EFFECTIVE B' ft	EFFECTIVE L' ft	EFFECTIVE q_{actual} ksf	FS_{actual}
IA - Static Undrained Strength	97,749	0	0	0	0	0.0	0.0	19.63	**6.54**	0.0	0.0	240.0	279.5	**1.46**	**13.47**
IB - Static Effective Strength	97,749	0	0	0	0	0.0	0.0	169.92	**56.64**	0.0	0.0	240.0	279.5	**1.46**	**116.61**

c =	3,180	Undrained strength (psf) & $\phi = 0$.
ϕ =	30.0	Effective stress friction angle (deg), c = 0.
B =	240	Footing width (ft)
L =	380	Footing length (ft)
D_f =	5.0	Depth of footing (ft)
γ =	90	Unit weight of soil (pcf)
γ_{surch} =	80	Unit weight of surcharge (pcf)
FS =	3	Factor of safety for static loads.

F_V = Vertical load (Static + EQ_V)

EQ_H = Earthquake: Horizontal force. $F_H = EQ_{H\,E\text{-}W}$ or $EQ_{H\,N\text{-}S}$

$\beta_B = \tan^{-1}[(EQ_{H\,E\text{-}W}) / F_V]$ = Angle of load inclination from vertical (deg) as f(width).

$\beta_L = \tan^{-1}[(EQ_{H\,N\text{-}S}) / F_V]$ = Angle of load inclination from vertical (deg) as f(length).

$e_B = \Sigma M_{@N\text{-}S} / F_V$ $\quad$ $e_L = \Sigma M_{@E\text{-}W} / F_V$

$B' = B - 2\,e_B$ $\quad$ $L' = L - 2\,e_L$

$q_{actual} = F_V / (B' \times L')$

TABLE 2.6-10

SUMMARY - ALLOWABLE BEARING CAPACITY OF CANISTER TRANSFER BUILDING

Based on Dynamic Loads Due to Design Basis Ground Motion: PSHA 2,000-yr Return Period

Case	F_V	$EQ_{H\,N\text{-}S}$	$EQ_{H\,E\text{-}W}$	$\Sigma M_{@N\text{-}S}$	$\Sigma M_{@E\text{-}W}$	β_B	β_L	GROSS		e_B	e_L	EFFECTIVE			FS_{actual}
						$EQ_{H\,E\text{-}W}$	$EQ_{H\,N\text{-}S}$	q_{ult}	q_{all}			B'	L'	q_{actual}	
	k	k	k	ft-k	ft-k	deg	deg	ksf	ksf	ft	ft	ft	ft	ksf	
II	97,749	111,108	99,997	2,706,961	2,849,703	45.7	48.7	13.17	**11.97**	27.7	29.2	184.6	221.2	**2.39**	**5.50**
IIIA	17,970	44,443	39,999	1,082,784	1,139,881	65.8	68.0	13.80	**12.54**	60.3	63.4	119.5	152.6	**0.99**	**14.01**
IIIB	65,837	44,443	99,997	2,706,961	1,139,881	56.6	34.0	14.10	**12.82**	41.1	17.3	157.8	244.9	**1.70**	**8.28**
IIIC	65,837	111,108	39,999	1,082,784	2,849,703	31.3	59.4	15.04	**13.67**	16.4	43.3	207.1	192.9	**1.65**	**9.13**
IVA	177,528	44,443	39,999	1,082,784	1,139,881	12.7	14.1	17.90	**16.26**	6.1	6.4	227.8	266.7	**2.92**	**6.12**
IVB	129,661	44,443	99,997	2,706,961	1,139,881	37.6	18.9	15.62	**14.19**	20.9	8.8	198.2	261.9	**2.50**	**6.25**
IVC	129,661	111,108	39,999	1,082,784	2,849,703	17.1	40.6	15.99	**14.53**	8.4	22.0	223.3	235.5	**2.47**	**6.49**

c = **3,180** Undrained strength (psf)

ϕ = **0.0** Friction angle (deg)

B = **240** Footing width (ft)

L = **380** Footing length (ft)

D_f = **5.0** Depth of footing (ft)

γ = **90** Unit weight of soil (pcf)

γ_{surch} = **80** Unit weight of surcharge (pcf)

FS = **1.1** Factor of safety for dynamic loads.

F_V = Vertical load (Static + EQ_V)

EQ_H = Earthquake: Horizontal force. $F_H = EQ_{H\,E\text{-}W}$ or $EQ_{H\,N\text{-}S}$

$\beta_B = \tan^{-1}[(EQ_{H\,E\text{-}W}) / F_V]$ = Angle of load inclination from vertical (deg) as f(wid

$\beta_L = \tan^{-1}[(EQ_{H\,N\text{-}S}) / F_V]$ = Angle of load inclination from vertical (deg) as f(leng

$e_B = \Sigma M_{@N\text{-}S} / F_V$ $\quad$ $e_L = \Sigma M_{@E\text{-}W} / F_V$

$B' = B - 2\,e_B$ $\quad$ $L' = L - 2\,e_L$

$q_{actual} = F_V / (B' \times L')$

[geot]\05996\calc\brng_cap\can_xfr.xls Table 2.6-10

Table 2.6-11

Foundation Loadings for the Canister Transfer Building

JOINT	ELEV	MASS X	MASS Y	MASS Z	Ax	Ay	Az	SHEAR X $F_{H\ N\text{-}S}$	SHEAR Y $F_{V\ Dyn}$	SHEAR Z $F_{H\ E\text{-}W}$	$\Sigma M_{Base\ @\ El\ 93.5}$ $M_{@X}=M_{@N\text{-}S}$	$M_{@Z}=M_{@E\text{-}W}$
	ft	k-sec^2 / ft	k-sec^2 / ft	k-sec^2 / ft	g	g	g	k	k	k	ft-k	ft-k
0	94.25	260.1	260.1	260.1	1.047	0.78	0.92	8,761	6,551	7,699	5,774	6,571
1	95	1,908.0	1,908.0	1,908.0	1.047	0.78	0.92	64,265	48,055	56,470	367,055	417,724
2	130	420.4	420.4	420.4	1.111	0.82	0.99	15,023	11,106	13,446	490,773	548,331
3	170	304.3	304.3	170.3	1.778	0.91	1.19	17,402	8,939	6,493	496,728	1,331,291
4	190	144.7	117.1	144.7	1.215	0.93	1.41	5,656	3,495	6,554	632,439	545,787
5	190	1.0	27.6	1.0	0	1.84	0.00	0	1,634	0	0	0
6	170	1.0	1.0	134.0	0	0	2.17	0	0	9,336	714,193	0
							TOTALS	111,108	79,779	99,997	2,706,961	2,849,703

B = 240 ft

L = 279.5 ft

WEIGHT 97,749 k

FS_{UPLIFT} = 1.23

Depth = 5 ft + 1.5 ft deep key with base at Elev 93.5 ft

Note: Elevations are referenced to assumed final grade of Elev 100.
Joint 0 equals clayey soils enclosed by perimeter key with γ = 90 pcf.
Based on masses and accelerations from p 37 of Calc 05996.02-SC-5, Rev. 2, which are applicable for "High" Moduli received from Geomatrix Calc 05996.02-G(PO18)-2, Rev. 1.

[geot]\05996\Calc\bmg_cap\CTB\Stability.xls "Dyn Loads"

Table 2.6-13

Sliding Stability of Canister Transfer Building Using Shear Strength Along Bottom of Plane Formed by 1.5-ft Deep Perimeter Key and Resistance from Soil Cement

Joint	MASS X $k\text{-}sec^2/ft$	MASS Y $k\text{-}sec^2/ft$	MASS Z $k\text{-}sec^2/ft$	N-S a_x g	Vert a_y g	E-W a_z g	Static F_v k	Earthquake $Shear_{N\text{-}S}$ k	Earthquake F_v k	Earthquake $Shear_{E\text{-}W}$ k
0	260.1	260.1	260.1	1.047	0.783	0.920	8,368	8,761	6,551	7,699
1	1,908.0	1,908.0	1,908.0	1.047	0.783	0.920	61,380	64,265	48,055	56,470
2	420.4	420.4	420.4	1.111	0.821	0.994	13,524	15,023	11,106	13,446
3	304.3	304.3	170.3	1.778	0.913	1.185	9,789	17,402	8,939	6,493
4	144.7	117.1	144.7	1.215	0.928	1.408	3,767	5,656	3,495	6,554
5	1.0	27.6	1.0	0.000	1.840	0.000	888	0	1,634	0
6	1.0	1.0	134.0	0.000	0.000	2.166	32	0	0	9,336
						Totals =	**97,749**	**111,108**	**79,779**	**99,997**

CTB Mat Dimensions: B = **240** ft (E-W)

Depth = **5** ft L = **279.5** ft (N-S)

For ϕ = **0.0** degrees c = **1.80** ksf

							N (k)	T (k)	V (k)	FS
							Resisting		*Driving*	
Earthquake Vertical Forces Acting Up	IIIA	$F_{v(Static)}$ 97,749	40% $F_{H(NS)}$ 44,443	100% $F_{v(Eqk)}$ -79,779	40% $F_{H(EW)}$ 39,999		17,970	133,173	59,792	**2.23**
	IIIB	$F_{v(Static)}$ 97,749	40% $F_{H(NS)}$ 44,443	40% $F_{v(Eqk)}$ -31,912	100% $F_{H(EW)}$ 99,997		65,837	133,173	109,429	**1.22**
	IIIC	$F_{v(Static)}$ 97,749	100% $F_{H(NS)}$ 111,108	40% $F_{v(Eqk)}$ -31,912	40% $F_{H(EW)}$ 39,999		65,837	133,173	118,088	**1.13**
Earthquake Vertical Forces Acting Down	IVA	$F_{v(Static)}$ 97,749	40% $F_{H(NS)}$ 44,443	100% $F_{v(Eqk)}$ 79,779	40% $F_{H(EW)}$ 39,999		177,529	129,677	59,792	**2.17**
	IVB	$F_{v(Static)}$ 97,749	40% $F_{H(NS)}$ 44,443	40% $F_{v(Eqk)}$ 31,912	100% $F_{H(EW)}$ 99,997		129,661	140,198	109,429	**1.28**
	IVC	$F_{v(Static)}$ 97,749	100% $F_{H(NS)}$ 111,108	40% $F_{v(Eqk)}$ 31,912	40% $F_{H(EW)}$ 39,999		129,661	138,400	118,088	**1.17**
Soil Cement ΔF_H for q_u (psi) = 250			21,600	N/A	25,155		for FS = 2.0			

CALCULATION IDENTIFICATION NUMBER				PAGE 43
J.O. OR W.O. NO.	DIVISION & GROUP	CALCULATION NO.	OPTIONAL TASK CODE	
05996.02	G(B)	13-4	N/A	

FIGURE 1

FOUNDATION SCHEMATIC & COORDINATE SYSTEM

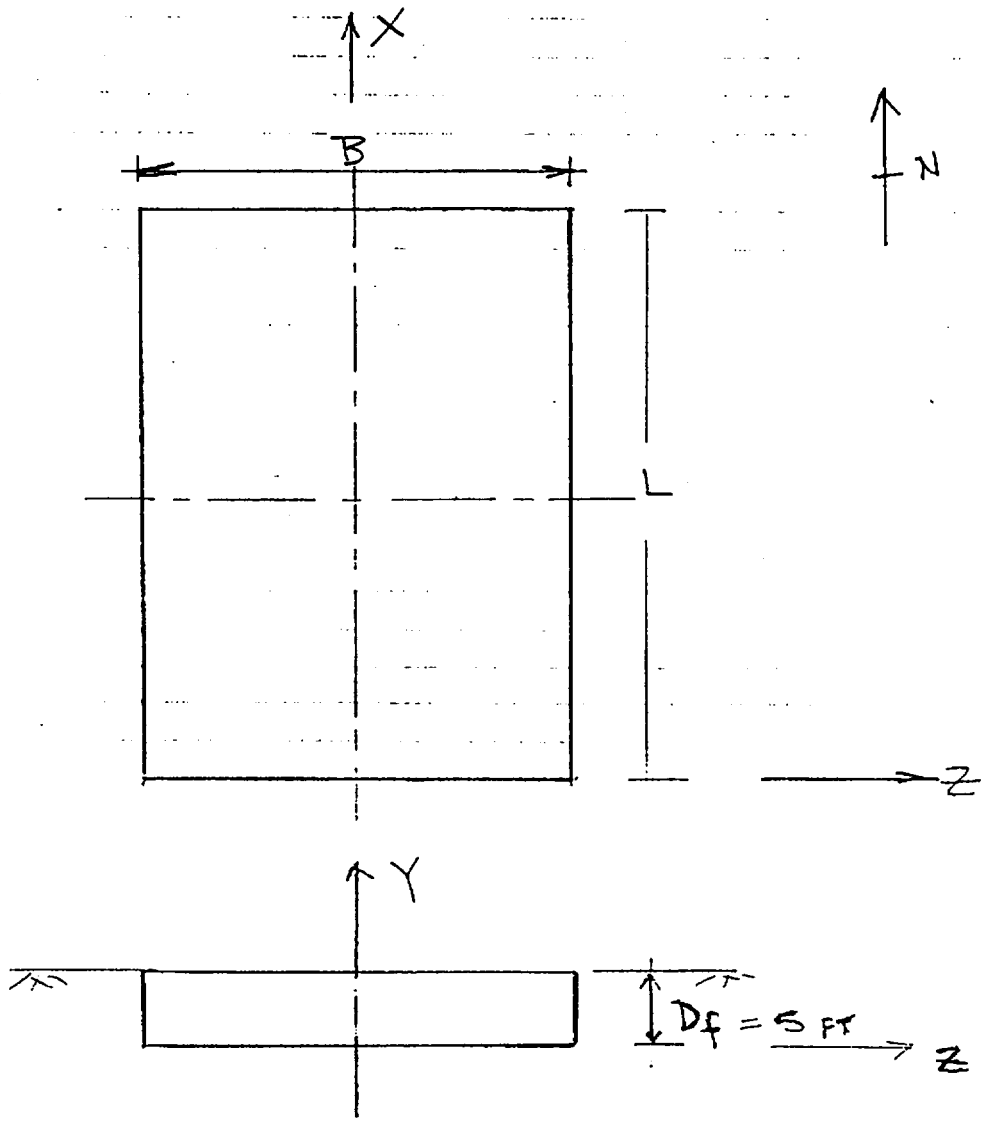

Note: The coordinate system is consistent with that used in Calculation 05996.02-SC-5.

FIGURE 2

CANISTER TRANSFER BUILDING STICK MODEL

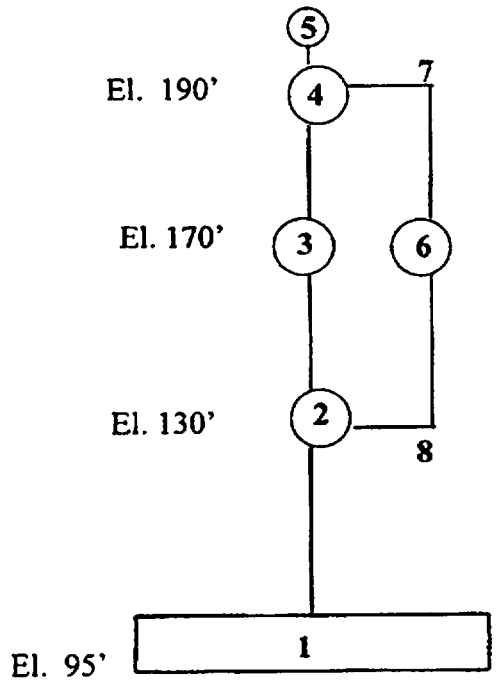

Note: From Calculation 05996.02-SC-5, Rev. 2, Page 8.

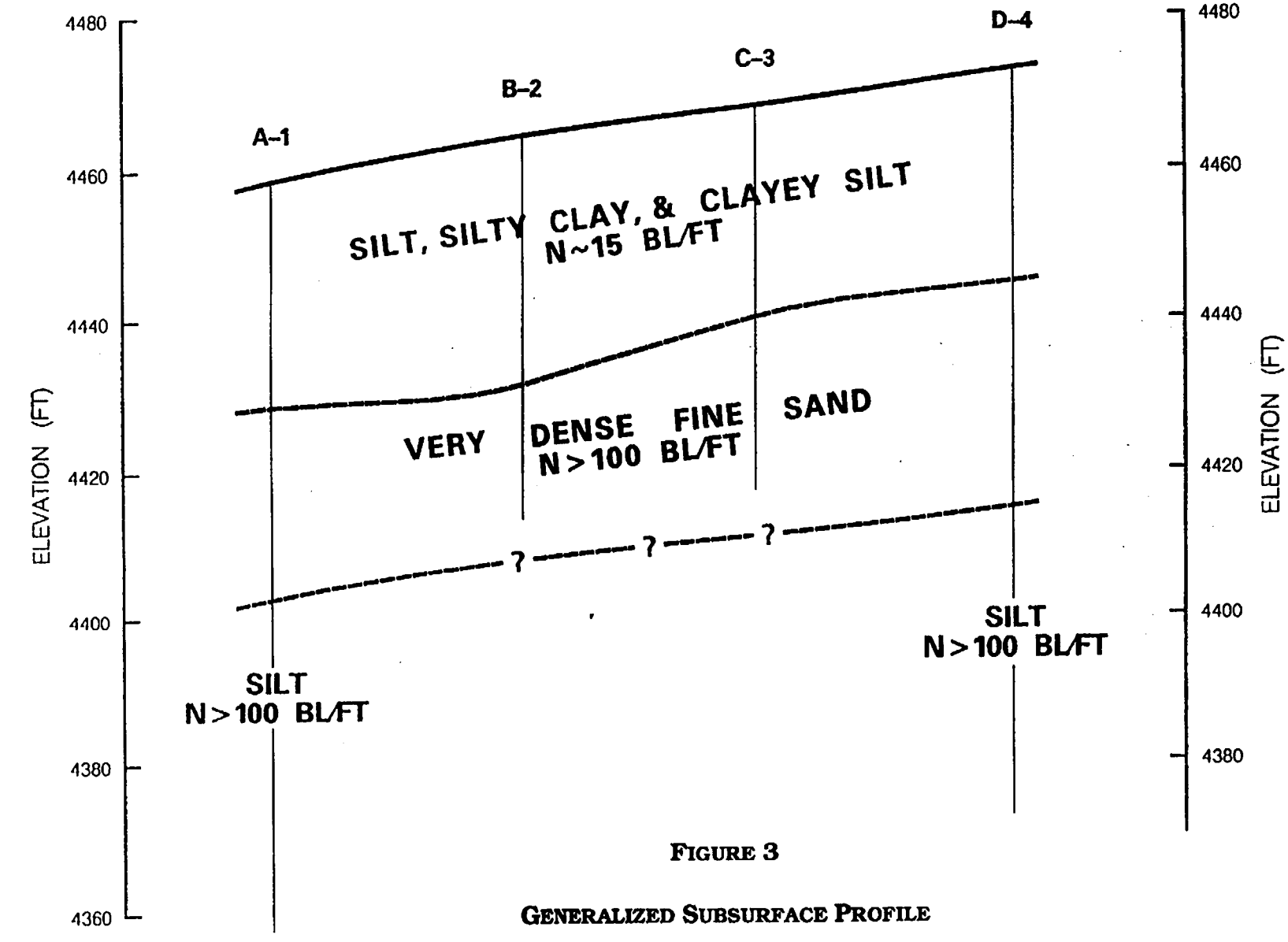

FIGURE 3

GENERALIZED SUBSURFACE PROFILE

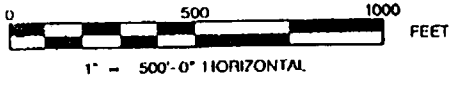

Note: From Calculation 05996.01-G(B)-03-1.

5010.65

STONE & WEBSTER, INC.

CALCULATION SHEET

J.O. OR W.O. NO.	DIVISION & GROUP	CALCULATION NO.	OPTIONAL TASK CODE
05996.02	G(B)	13-4	N/A

CALCULATION IDENTIFICATION NUMBER

CALCULATION IDENTIFICATION NUMBER				PAGE 46
J.O. OR W.O. NO.	DIVISION & GROUP	CALCULATION NO.	OPTIONAL TASK CODE	
05996.02	G(B)	13-4	N/A	

FIGURE 4

DETERMINATION OF WEIGHTED AVERAGE VALUE OF S_U BASED ON RELATIVE STRENGTH DIFFERENCE OF DEEPER LYING SOILS MEASURED IN CONE PENETRATION TESTS

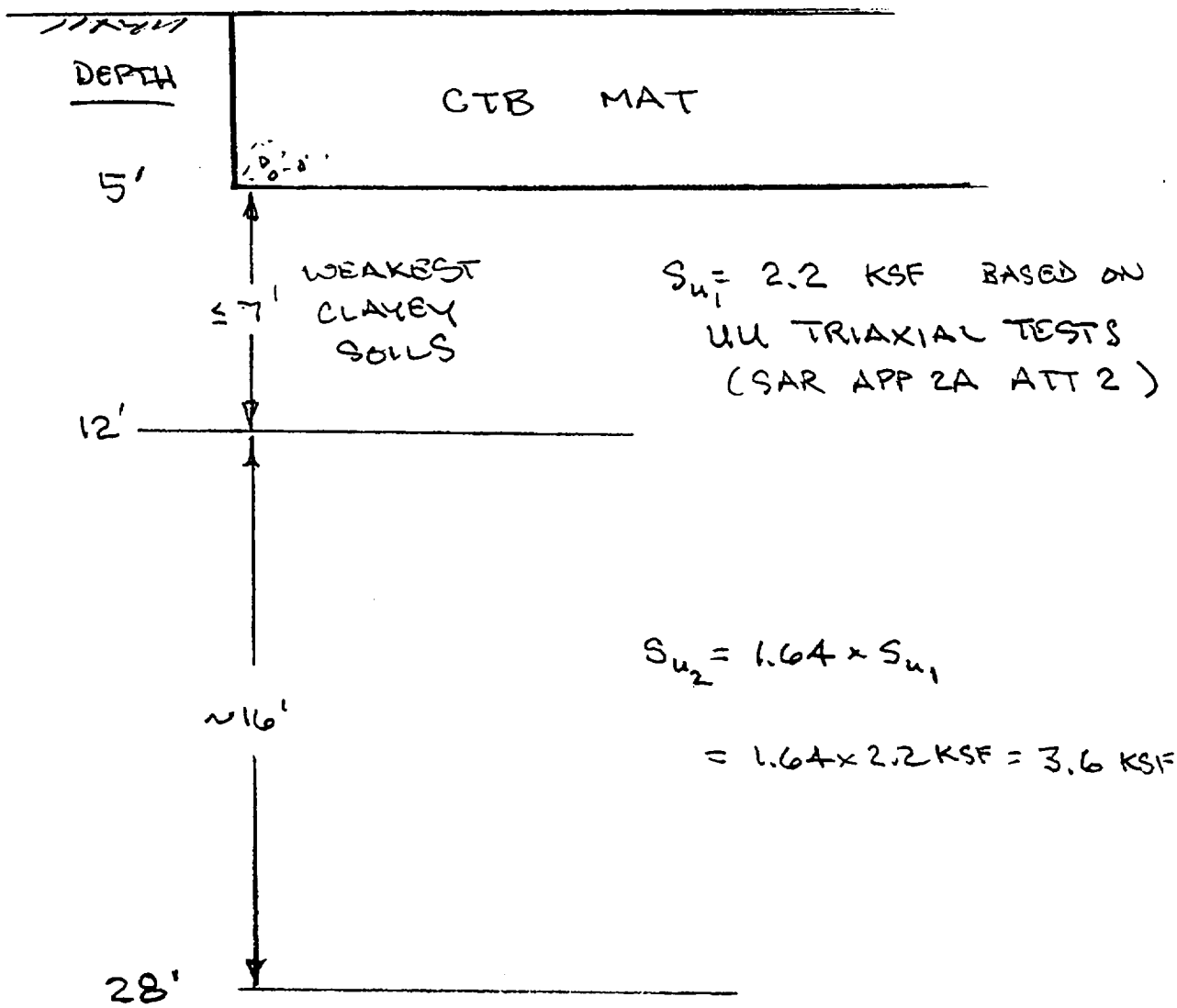

$$S_{u_{AVG}} = \frac{7' \times 2.2 \text{ KSF} + 16' \times 1.64 \times 2.2 \text{ KSF}}{23 \text{ FT}} = 3.18 \text{ KSF}$$

FIGURE 5

ESTIMATE STRESSES UNDER THE CANISTER TRANSFER BUILDING AT COMPLETION OF CONSTRUCTION

F_V = Total dead weight = 97,749 K from Table 2.6-11

A = Area of mat = 240ft x 279.5 ft = 67,080 ft²

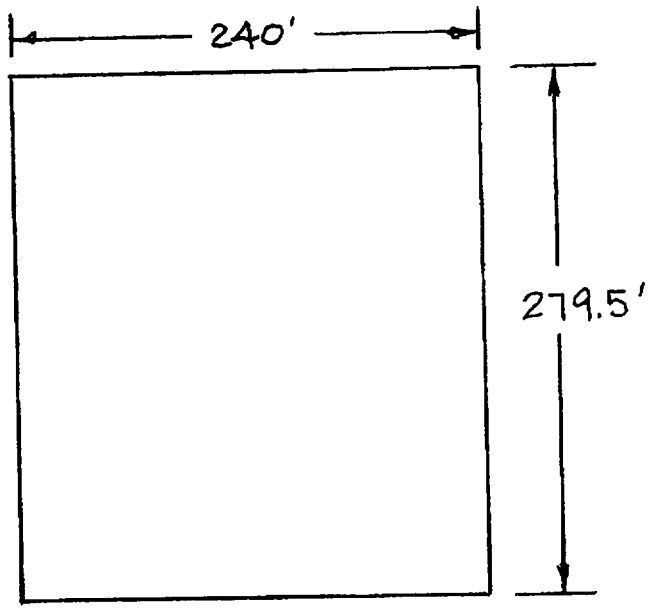

PLAN

$$\sigma = \frac{F_V}{A} = \frac{97{,}749\ K}{67{,}080\ K} = 1.46\ ksf$$

TABLE 6

SUMMARY OF TRIAXIAL TEST RESULTS FOR SOILS WITHIN ~10 FT OF GROUND SURFACE AT THE SITE

Boring	Sample	Depth ft	Elev ft	w %	ATTERBERG LIMITS LL	PL	PI	USC Code	γ_m pcf	γ_d pcf	e_o	σ_c ksf	s_u ksf	ε_a %	Type	Date
B-1	U-2C	5.9	4453.9	47.1	66.1	33.4	32.7	MH	79.3	53.9	2.15	0.0	2.03	1.7	CU	Nov '99
B-1	U-2B	5.3	4454.5	52.9	80.6	40.9	39.7	MH	70.8	46.3	2.67	1.0	2.21	6.0	CU	Nov '99
B-4	U-3D	10.4	4462.1	27.4	42.5	24.7	17.8	CL	85.5	67.1	1.53	1.3	2.18	4.0	UU	Jan '97
C-2	U-2D	11.1	4453.4	35.6	See U-2C & E[1]			CL	78.5	57.9	1.93	1.3	2.39	11.0	UU	Jan '97
CTB-1	U-3D	8.7	4463.7	47.9	See U-3C[2]			CH	91.9	62.1	1.73	1.7	2.84	5.0	CU	June '99
CTB-4	U-2D	9.5	4465.5	45.2	See U-2E[2]			CH	87.7	60.4	1.81	1.7	3.11	6.0	CU	June '99
CTB-6	U-3D	8.3	4467.9	52.7				CH	85.7	56.2	2.02	1.7	2.70	7.0	CU	June '99
CTB-N	U-1B	5.7	4468.4	30.1	41.3	22.5	18.8	CL	100.6	77.3	1.20	1.7	3.00	8.0	CU	Nov '98
CTB-N	U-2B	7.7	4466.4	65.4	See U-2A[2]			MH	74.6	45.1	2.76	1.7	2.41	13.0	CU	June '99
CTB-N	U-3D	10.5	4463.6	52.2	61.1	30.8	30.3	CH	86.3	56.7	1.98	1.7	2.73	7.0	CU	June '99
CTB-S	U-1B	5.8	4468.7	73.6	66.2	40.9	25.3	MH	78.0	44.9	2.78	1.7	2.05	12.0	CU	Nov '98
CTB-S	U-2D	8.4	4466.1	54.6	57.9	28.9	29.0	CH	90.0	58.2	1.92	1.7	2.40	5.0	CU	June '99
B-1	U-2D	6.5	4453.3	45.2	59.8	34.7	25.1	MH	76.7	52.8	2.22	2.1	3.26	15.0	CU	Mar '99
B-3	U-1B	5.2	4463.0	33.5	52.4	25.2	27.2	MH	90.6	67.9	1.50	2.1	3.55	8.0	CU	Mar '99
C-2	U-1D	6.3	4458.2	50.5	70.3	41.3	29.0	MH	74.5	49.5	2.43	2.1	3.03	12.0	CU	Mar '99

NOTES 1 Attachment 2 of SAR Appendix 2A.
2 Attachment 6 of SAR Appendix 2A.

ATTACHMENT A p A1/4
TO CALC 05996.02-G(B)-13-4

[geot]\05996\calc\G(B)\05-2\Table_6.xls

FIGURE 9
DIRECT SHEAR TEST
Boring CTB-6, Sample U-3B&C
CANISTER TRANSFER BUILDING AREA

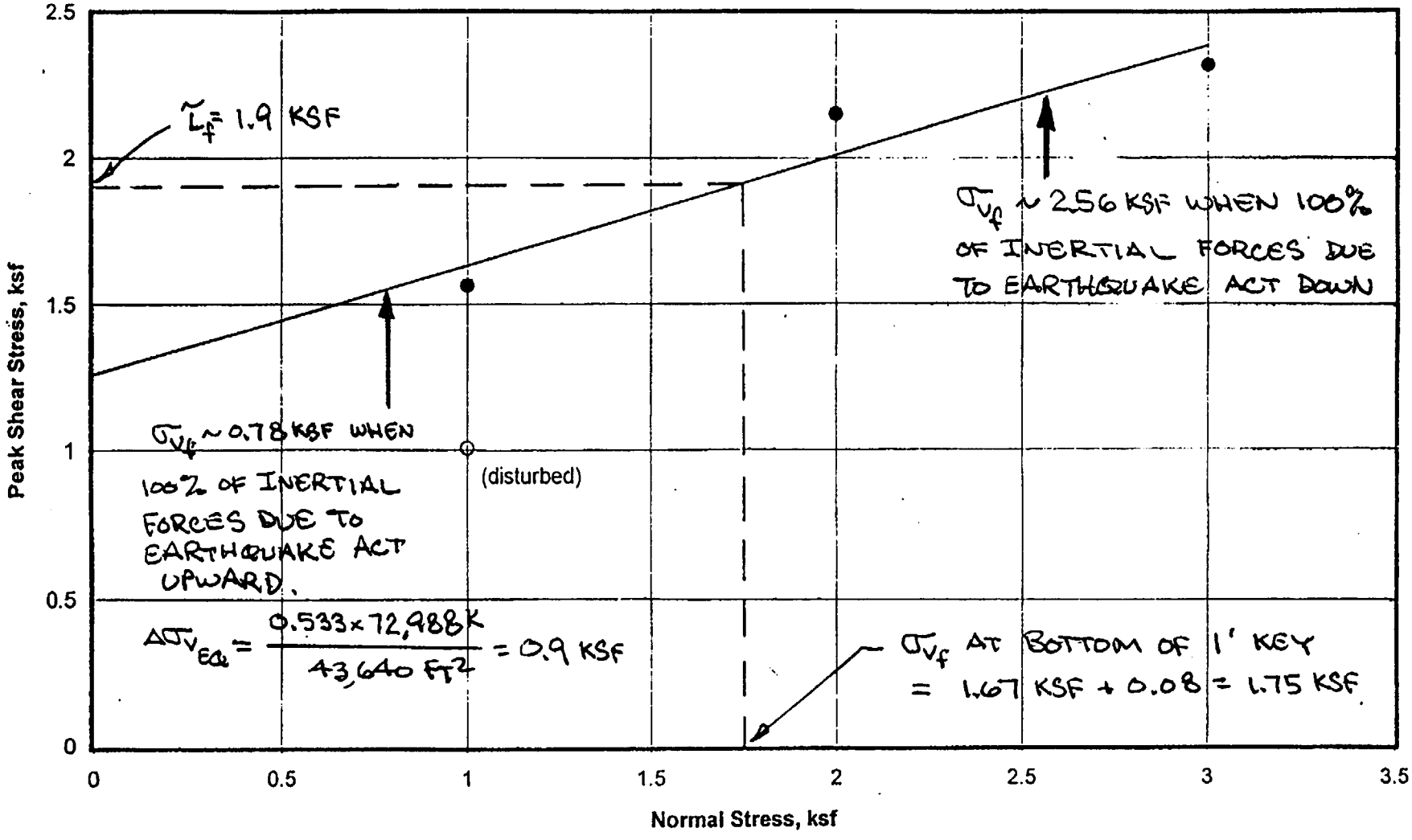

CALC 05996.02-G(B)-05-2 p 34

PFSF SKULL VALLEY, UT
SAR APP 2A ATT 7

ATTACHMENT A p A2
CALC 05996.02-G(B)-13-4

STONE & WEBSTER ENGINEERING CORPORATION

FIGURE 10

DIRECT SHEAR TEST

Boring CTB-S, Sample U-1AA&C

CANISTER TRANSFER BUILDING AREA

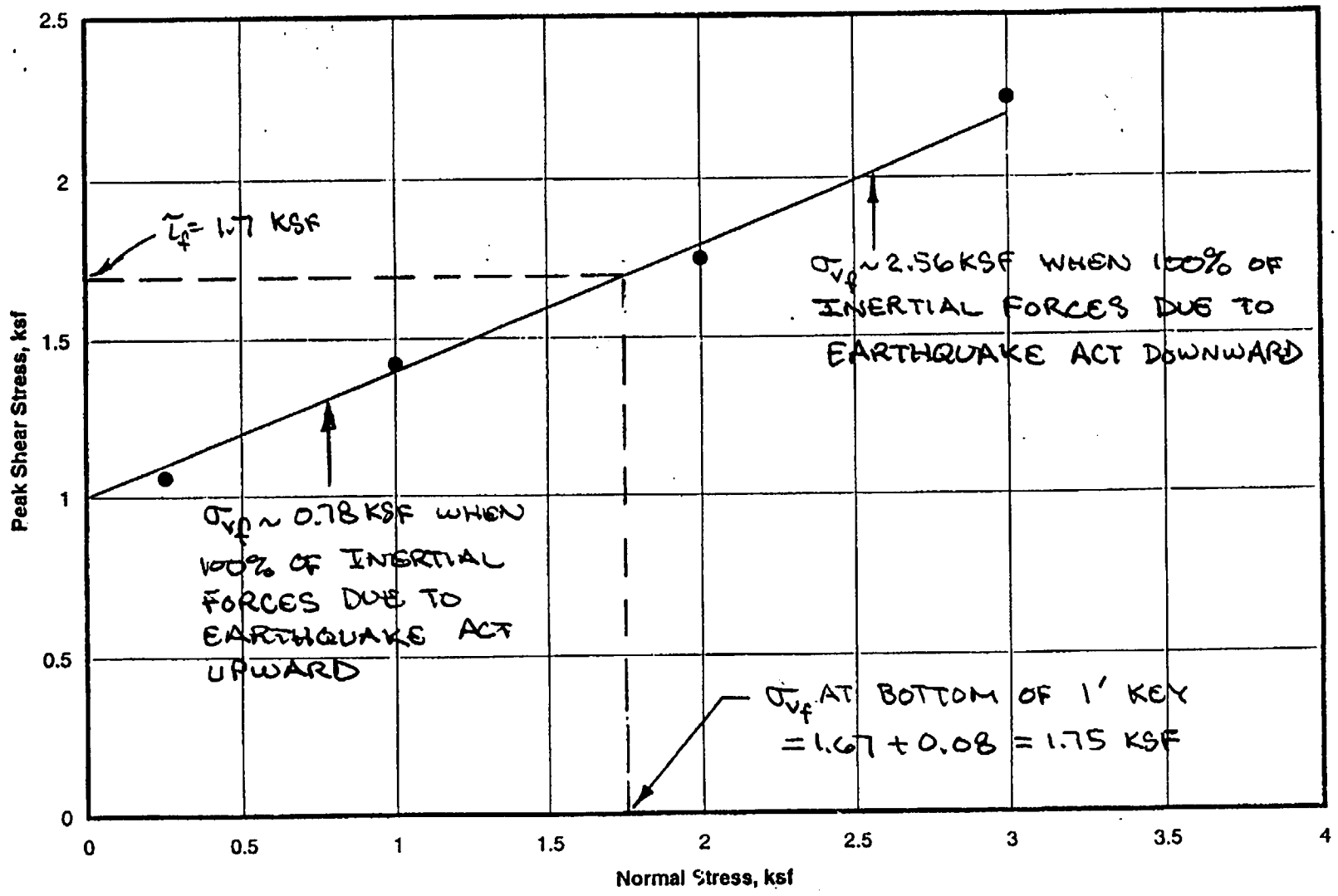

CALC 05996.02-G(B)-05-2 P 35

Figure 11

Summary of Triaxial Test Results for Soils Within Depth of ~10 ft
OF GROUND SURFACE AT THE SITE

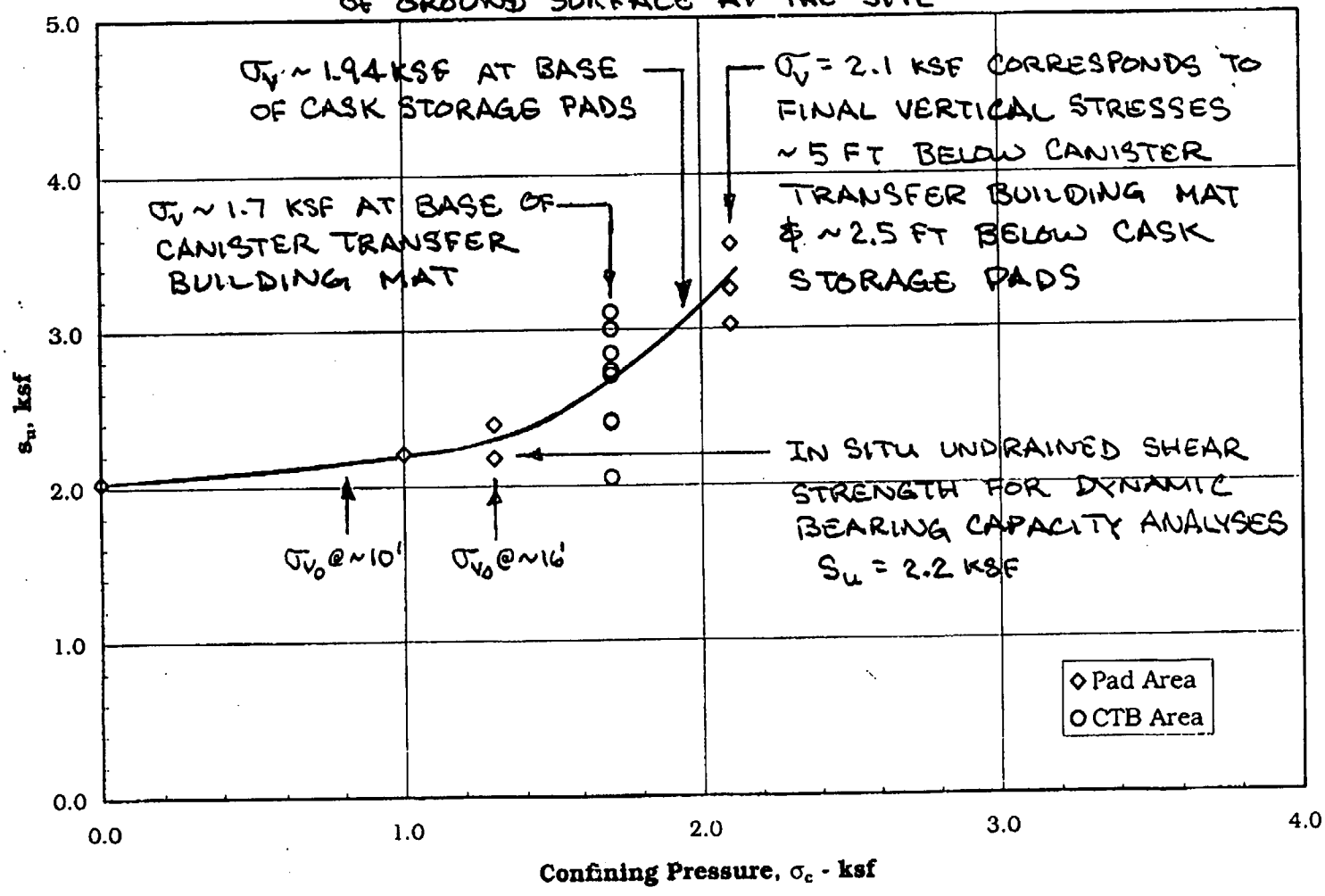

ATTACHMENT A p A4
CALC 05996.02-G(B)-13-4

CONETEC

Stone & Webster

Site: CPT-37
Location: PFSF (05996.02)

Cone: 20 TON A 041
Date: 04:23:99 11:36

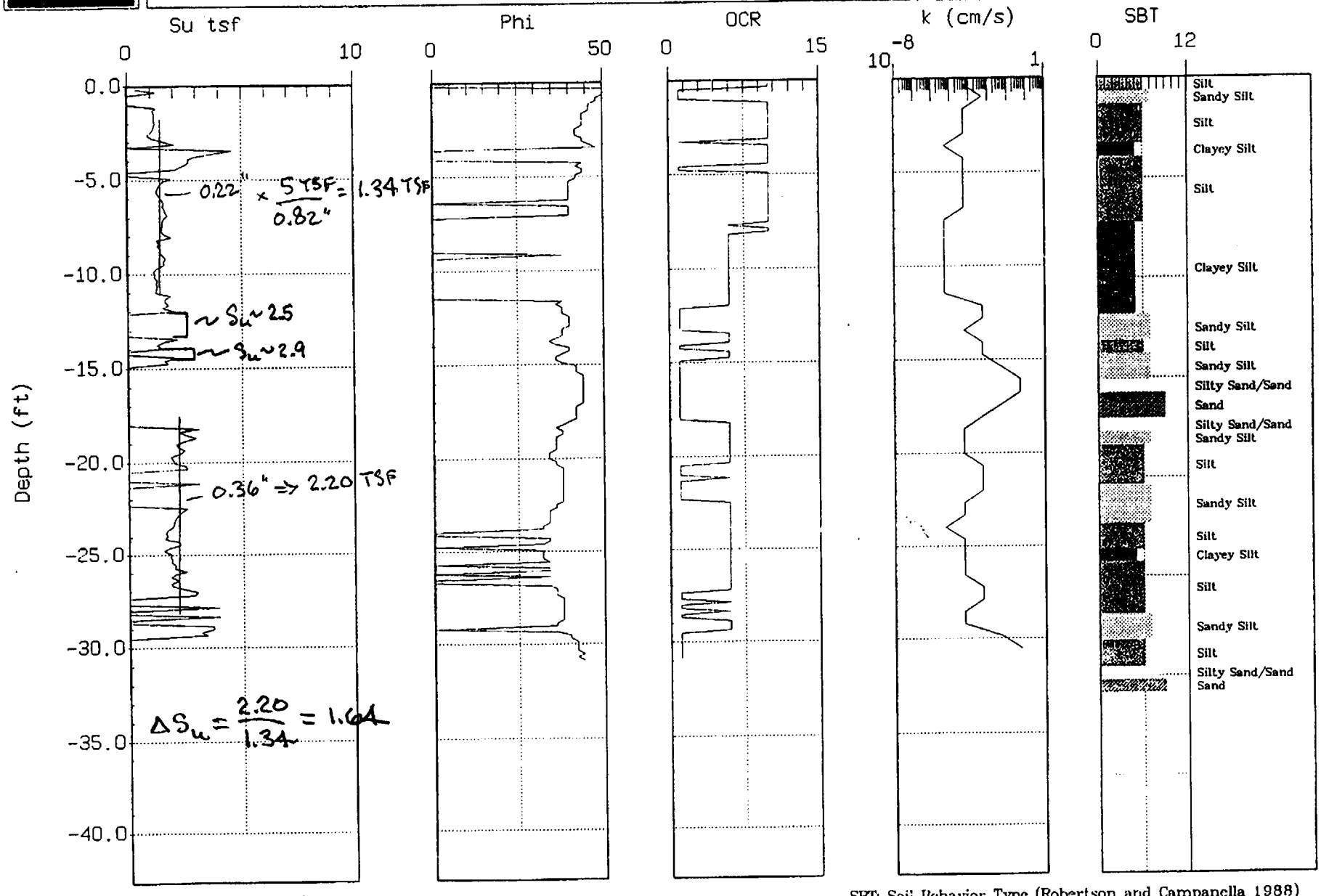

Max. Depth: 30.84 (ft)

Depth Inc.: 0.164 (ft)

Permeability k: estimated from soil type

SBT: Soil Behavior Type (Robertson and Campanella 1988)

(5) FEB JUN 2 2000 P.J. Initial

ATTACHMENT B
CALC 05996.02-G(B)-13-4 P B1/2

CONETEC

Stone & Webster

Site: CPT-38
Location: PFSF (05996.02)

Cone: 20 TON A 041
Date: 04:23:99 15:06

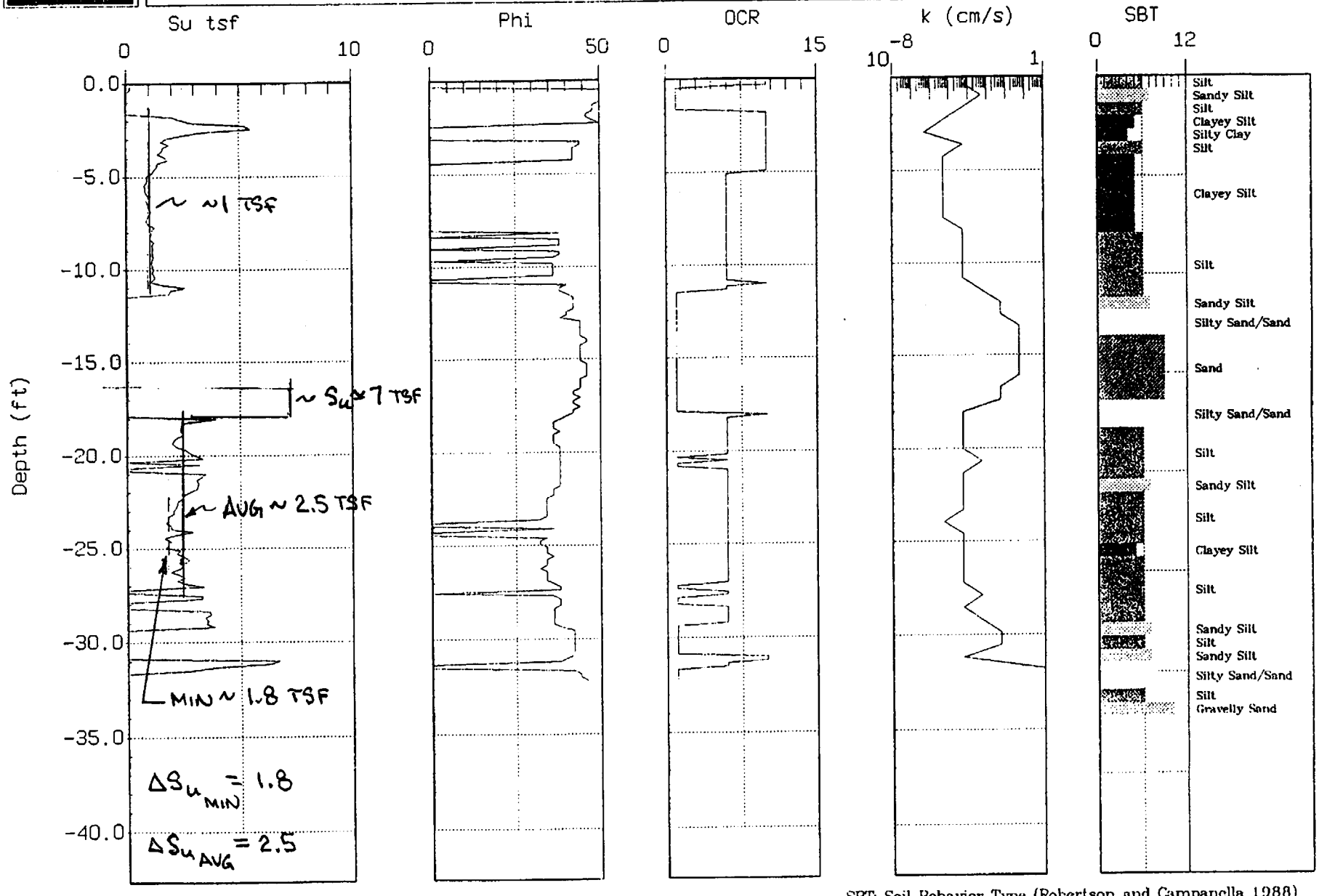

Max. Depth: 32.15 (ft)

Depth Inc.: 0.164 (ft)

Permeability k: estimated from soil type

SBT: Soil Behavior Type (Robertson and Campanella 1988)

JUN 2 2000 P.I.

ATTACHMENT B
CALC 05996.02-G(B)-13-4
P B2