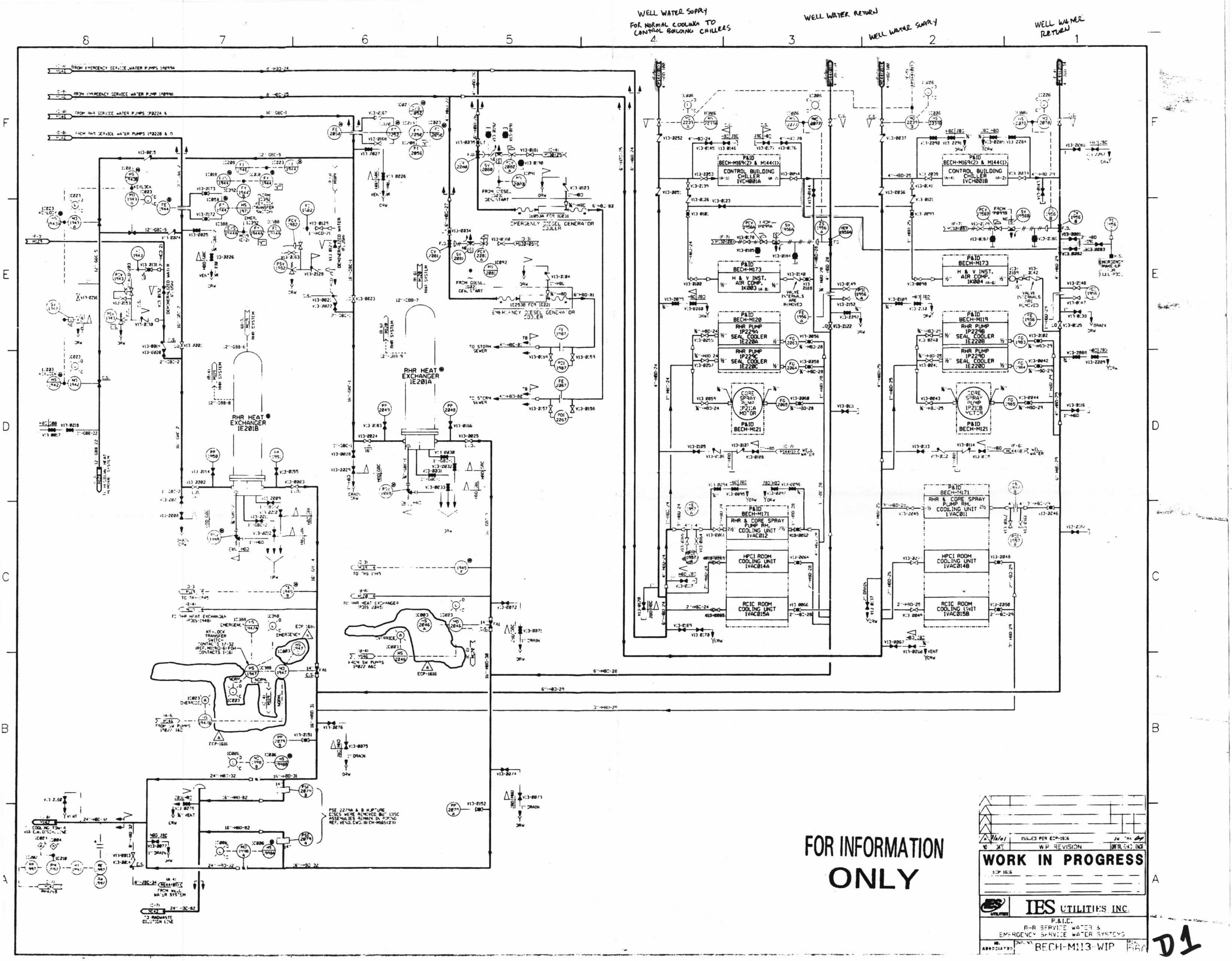
WELL WATER SUPPLY
FOR NORMAL COOLING TO CONTROL BUILDING CHILLERS
WELL WATER RETURN
WELL WATER SUPPLY
WELL WATER RETURN
RHR HEAT EXCHANGER 1E201A
RHR HEAT EXCHANGER 1E201B
EMERGENCY DIESEL GENERATOR COOLER
CONTROL BUILDING CHILLER 1VCH001A
CONTROL BUILDING CHILLER 1VCH001B
H & V INST. AIR COMP. 1K003
H & V INST. AIR COMP. 1K004
RHR PUMP 1P229A SEAL COOLER 1E220A
RHR PUMP 1P229C SEAL COOLER 1E220C
RHR PUMP 1P229B SEAL COOLER 1E220B
RHR PUMP 1P229D SEAL COOLER 1E220D
CORE SPRAY PUMP 1P211A MOTOR
CORE SPRAY PUMP 1P211B MOTOR
RHR & CORE SPRAY PUMP RM. COOLING UNIT 1VAC012
RHR & CORE SPRAY PUMP RM. COOLING UNIT 1VAC011
HPCI ROOM COOLING UNIT 1VAC014A
HPCI ROOM COOLING UNIT 1VAC014B
RCIC ROOM COOLING UNIT 1VAC015A
RCIC ROOM COOLING UNIT 1VAC015B
FOR INFORMATION ONLY
WORK IN PROGRESS
ISSUED PER ECP-1616
W.P. REVISION
IES UTILITIES INC.
P.&I.D.
R-R SERVICE WATER &
EMERGENCY SERVICE WATER SYSTEMS
BECH-M113-WIP
D1