Entergy

Entergy Operations, Inc.
17265 River Road
Killona, LA 70066
Tel 504 739 6650

W3F1-2001-0007
A4.05
PR

April 2, 2001

U. S. Nuclear Regulatory Commission
Attention: Document Control Desk
Washington, D. C. 20555

Subject: Waterford 3 SES
Docket No. 50-382
License No. NPF-38
Request for Review and Approval of Design Basis Change Regarding Realignment of Refueling Water Storage Pool (RWSP) Boundary Isolation Valves to RWSP Purification System

Gentlemen:

Pursuant to 10CFR50.90 and 10CFR50.59, Entergy hereby requests an amendment of the Facility Operating License NPF-38 for Waterford 3 Steam Electric Station (Waterford 3). Entergy requests review and approval, pursuant to 10CFR50.59 of changes to the Waterford 3 design basis as described in the Updated Final Safety Analysis Report (UFSAR) for which it has been determined that an unreviewed safety question exists. The change concerns design requirements for the alignment of the Refueling Water Storage Pool boundary isolation valves to the Refueling Water Storage Pool Purification System. Because the proposed change involves an unreviewed safety question, NRC staff approval is required per 10CFR50.59.

Additional information and documents to support this application are provided as attachments to this letter. Attachment 1 provides the description, no significant hazards consideration determination, operability determination, and evaluation for environmental impact for the changes. Attachment 2 provides a copy of the marked-up UFSAR pages for the proposed changes. Attachment 3 addresses the commitments associated with this submittal.

A001

Although this request is neither exigent nor an emergency, review and approval is requested by April 2, 2002.

After NRC staff approval of this amendment request, the UFSAR will be revised as indicated in Attachment 2.

If you should have any questions on the above or on the attachments, please contact M. K. Brandon at (504) 739-6254. I declare under penalty of perjury that the foregoing is true and correct. Executed on April 2, 2001.

Very Truly Yours,

J.T. Herron
Vice President, Operations
Waterford 3

JTH/dm/ssf
Attachments

cc: E. W. Merschoff, NRC Region IV
N. Kalyanam, NRC-NRR
J. Smith
N. S. Reynolds
NRC Resident Inspectors Office

ATTACHMENT 1 TO W3F1-2001-0007

Changes Regarding Realignment of Refueling Water Storage Pool Boundary Isolation Valves to the Refueling Water Storage Pool Purification System

Changes Regarding Realignment of Refueling Water Storage Pool Boundary Isolation Valves to the Refueling Water Storage Pool Purification System

The proposed change will revise the design position of two normally closed valves to normally open valves. These manually operated valves act as the system boundary isolation between the safety related Refueling Water Storage Pool (RWSP), which is the suction source for the Emergency Core Cooling System (ECCS) pumps, and the non-safety RWSP Purification system.

In accordance with 10CFR50.90 and 10CFR50.59, Nuclear Regulatory Commission (NRC) Staff review and approval is required for changes to the Waterford 3 Steam Electric Station (Waterford 3) design basis as described in the Updated Final Safety Analysis Report (UFSAR) when such changes involve an unreviewed safety question (USQ). This change was determined to be an USQ based on the possibility of creating a malfunction of equipment important to safety of a different type than any previously evaluated. There exists the potential for RWSP borated water to be diverted from the suction of the ECCS pumps via the RWSP purification system. If unabated, this could result in an insufficient volume in the RWSP and potentially render it incapable of performing its safety function.

Section 3.2.1 in the Waterford 3 Updated Final Safety Analysis Report (UFSAR) states that the seismic classifications are consistent with the recommendations of Regulatory Guide 1.29, "Seismic Design Classification," August 1973. The guide states that the system boundary for systems required for emergency core cooling includes those portions of the system required to accomplish the specified safety function and connected piping up to and including the first valve that is either normally closed or capable of automatic closure when the safety function is required. The proposed change represents an exception to the regulatory guide; however, the proposed change is acceptable based on meeting the requirements of ANSI N18.2-1975 and ANSI N18.2a when operator actions are utilized to isolate the RWSP Purification System.

The following provides the background and description of the proposed changes, bases for the change, as well as the evaluation for no significant hazards consideration, and environmental impact evaluation.

System Description

The primary safety function of the RWSP is to provide borated water to the suction of the ECCS and Containment Spray System (CSS) pumps during the initial phase of a Loss of Coolant Accident (LOCA). The RWSP Purification System provides a means of maintaining the purity and clarity of the water contained in the RWSP. The RWSP

Purification System pumps the water from the RWSP through a filter to remove particles, through an ion exchanger to remove ionic material and then through a wye strainer which prevents transportation of resin beads through the system. The purification system also serves as a make-up path to the Spent Fuel Pool (SFP) and as a source of fill water to the refueling cavity during refueling outages. The RWSP and the piping up to and including the RWSP Purification System isolation valves (FS-423 and FS-404) are safety-related and seismically qualified, while the majority of the remaining portion of the RWSP Purification System is non-safety related and non-seismically qualified.

The RWSP and its boundary isolation valves (FS-423 and FS-404) were designed in accordance with General Design Criteria 2 (GDC-2) from the Code of Federal Regulations 10CFR50, Appendix A. The RWSP Purification System boundary isolation valves are built to ASME Section 3, Class 3 specifications. The RWSP isolation valves (FS-423 and FS-404) are normally closed isolation valves. These isolation valves serve as the safety class 3 to a non-safety class break.

The RWSP Purification System was not originally intended to be run continuously, but rather to be used intermittently. However, in order to maintain personnel exposure as low as reasonably achievable, the current practice is to operate the RWSP Purification System aligned to the RWSP approximately 50% of the time, alternating with operation of the system on the SFP. In 1999, the average dose rate in the ECCS Pump Room areas was 3.06 mR/hr. Having purified the RWSP prior to the outage and cycling the purification between RWSP and the SFP, the current average is 1.81 mR/hr with this number dropping as radioactivity in RWSP is removed. This equates to a 41% dose rate reduction to every individual who enters the ECCS Pump Room areas. Additionally, the RWSP Purification System also assures clarity of the refueling pool for refueling operations. Current practice is to operate the RWSP Purification System continuously for 90 days prior to the start of a refueling outage.

Background

The proposed change will revise the design position of the RWSP suction and return boundary isolation valves (FS-423 and FS-404, respectively) to the RWSP Purification System from normally closed to normally open. The current design of the system is to maintain FS-423 and FS-404 closed except when the RWSP Purification System is aligned to the RWSP. The RWSP Purification System Isolation valves (FS-423 and FS-404) are ASME Class 3, seismic category I, manually operated valves. These valves act as the class-break between the safety-related RWSP and non-safety related RWSP purification system.

In 1996 a concern was identified while reviewing an Institute of Nuclear Power Operations (INPO) Event Report from another facility. The concern was that the RWSP Purification System for the most part is not seismically qualified. This system can be aligned to the safety related RWSP for extended periods of time. The RWSP Purification System isolation valves are manually operated and do not automatically close to isolate the system in the event of a LOCA. Therefore, if a LOCA were to occur simultaneously with a RWSP Purification System piping break while the RWSP Purification System was aligned to the RWSP, borated water could be diverted from the suction of the Emergency Core Cooling System (ECCS) pumps. This could result in an insufficient volume in the RWSP and potentially render it incapable of performing its safety function. This condition was identified in Condition Report (WF3-96-1282). An operability determination was performed and the systems declared operable based on the implementation of various administrative controls.

Current Operability Determination for Affected Components

Generic Letter 91-18, Revision 1, "Information to Licensees Regarding NRC Inspection Manual Section on Resolution of Degraded and Nonconforming Conditions, Change to Current Licensing Basis," dated October 8, 1997, makes the following discussion regarding changing the licensing basis to accept a non-conforming or degraded condition:

> [One] situation [to consider] is a final resolution in which the licensee plans to change the current licensing basis to accept the as-found nonconforming condition. In this case, the 10CFR 50.59 evaluation is of the change from the SAR-described condition to the existing condition in which the licensee plans to remain (i.e., the licensee will exit the corrective action process by revising its licensing basis to document acceptance of the condition). If the 10CFR50.59 evaluation concludes that a change to the TS or a USQ is involved, a license amendment must be requested, and the corrective action process is not complete until the approval is received, or other resolution occurs. In order to resolve the degraded or nonconforming condition without restoring the affected equipment to its original design, a licensee may need to obtain an exemption from 10CFR Part 50 in accordance with 10CFR50.12, or relief from a design code in accordance with 10CFR50.55a. The use of 10CFR50.59, 50.12, or 50.55a in fulfillment of Appendix B corrective action requirements does not relieve the licensee of the responsibility to determine the root cause, to examine other affected systems, or to report the original condition, as appropriate.
>
> In both situations, the need to obtain NRC approval for a change (e.g., because it involves a USQ) does not affect the licensee's authority to operate the plant. The licensee may make mode changes, restart from outages, etc. provided that

necessary equipment is operable and the degraded condition is not in conflict with the TS or the license. The basis for this position was previously discussed in Section 4.5.1.

Entergy has performed an operability determination for the components that are affected by the proposed change. The change will allow the safety related RWSP to be aligned to the non-safety related RWSP Purification System through manually operated seismic boundary, safety class boundary valves, which will be maintained open. To support the operability determination specific compensatory actions have been included in operating procedures that direct the operator to take actions to isolate the RWSP from the RWSP Purification System in the event of any type of leakage in the Purification System piping; a Loss of Coolant Accident occurs; or a Seismic Event occurs.

The following administrative controls were established when the RWSP Purification System is aligned to the RWSP: 1) the option of either maintaining the RWSP level greater than or equal to 84.5% or stationing a dedicated operator in the vicinity of the isolation valves who is in communication with the Control Room and available to secure the system lineup; 2) trending the RWSP level on the plant computer, which provides a more readily identifiable change in level; and 3) isolation of the system if there is an indication of a leak in the Purification System, a Loss of Coolant Accident (LOCA), or a seismic event. This guidance helps ensure that the safety function of the RWSP is maintained.

Therefore, the potentially affected systems have been determined to be operable with respect to the proposed re-alignment of the RWSP Purification System. Entergy is requesting NRC staff approval for the license basis change to accept the non-conforming condition. Plant operation with the proposed RWSP Purification System re-alignment does not pose an undue risk to public health and safety.

Alternatives Considered for Resolution

Waterford 3 has considered several plant modifications as possible sources of resolution for this condition. Each options was reviewed for feasibility and it was determined that none of those considered were practical as described below.

The installation of a standpipe in the RWSP that would prevent inadvertently draining the RWSP upon failure of the connected non-safety related purification piping was considered as an option. This would also require the addition of a new cross connect between the Safety Injection System and the RWSP Purification pump suction piping to allow filling the deep end of the refueling cavity with the purification pump during

refueling. To install this modification the RWSP would have to be drained. Outage duration would be significantly impacted by this modification.

Another option considered would install two ASME Class 3, fail closed, air operated valves (AOV) in series on the suction line downstream of existing valve FS-423. The new valves would receive a close signal from the RWSP level instrumentation. The piping between the existing and new isolation valves would be replaced with safety related ASME Class 3 components. A check valve would be installed on the return line upstream of the existing manual isolation valve FS-404. Additionally, to facilitate quarterly ASME Section XI testing capabilities of the check valve, a new non-safety related isolation valve with test valve would have to be installed upstream of the new check valve. The funding and resources associated with the preparation and implementation of this modification would be better utilized working on other projects that are more safety significant.

The final option considered was to establish seismic qualification and install automatic trips on the purification pumps signaled from the RWSP level instrumentation. This option was determined to be impractical because an extensive amount of piping would have to be qualified and possibly replaced. Additionally, the safety related RWSP level instrumentation would be used to trip a non-safety related purification pump.

Seismic Evaluation

A detailed review and evaluation of the integrity of the RWSP Purification System based on the system description, review of the original stress calculations, and a comparison to similar plant components has been performed. This review concentrated on the portion of the system from the RWSP nozzles to the valves requiring operator action. It has been concluded that the RWSP purification piping will remain in–place during and after a seismic event. Additionally, a detailed walk down of the accessible system components and surrounding plant features was performed to evaluate potential seismic interaction between the RWSP Purification System and adjoining plant systems, structures and components. It was determined that the RWSP Purification System piping is adequately supported in accordance with the requirements of ASME Boiler & Pressure Vessel Code, Section III and ANSI B31.1, "Code for Power Piping, B31.1" as applicable. The portion of the system and components that were not originally analyzed were evaluated by comparison with similar Seismic 1 piping and components and found to be acceptable. Therefore, it is Engineering's judgment that during a design basis seismic event, the RWSP Purification System will not experience a catastrophic failure and deplete the Emergency Core Cooling System (ECCS) supply from the RWSP during normal RWSP Purification operation. The stress in the analyzed portion of the system was reviewed for moderate energy line cracks and was found to satisfy the criteria for not assuming leakage cracks. A moderate energy line crack is

assumed in the unanalyzed portion of the system in accordance with FSAR section 3.6.2.1 and Branch Technical Position MEB 3-1.

Discussion of Proposed Change

Waterford 3 proposes to revise its design and licensing bases to reposition valves FS-423 and FS-404 from normally closed to normally open. Their function as both a safety class boundary and seismic category 1 boundary will be satisfied through crediting manual actions to close these valves in the event of a leak in the purification loop system or while providing makeup to the SFP concurrent with a LOCA.

Section 3.2.2 in the Waterford 3 UFSAR states that system components important to safety are classified in accordance with ANSI N18.2-1975, "Nuclear Safety Criteria for the Design of Stationary Pressurized Water Reactor Plants," and ANSI N18.2a-1975, "Revision and Addendum to Nuclear Safety Criteria for the Design of Stationary Pressurized Water Reactor Plants." These standards provide design criteria for safety class interfaces for fluid systems. In accordance with the ANSI standard, a safety class 3 component may be connected to components of a differing class. However, the active failure of the safety class 3 component combined with failure of any lower class component cannot prevent achievement of the minimum safety system function of the higher-class system. Therefore, the change in the normal position of RWSP isolation valves to the RWSP Purification System from normally closed to normally open, and the potential impact of the non-safety RWSP purification system on the safety-related RWSP will be evaluated. This will include different RWSP purification system line-ups and failures, which may allow water to be diverted from the RWSP coincident with an accident or an event.

With the proposed open position of the RWSP Purification System boundary valves, the consequences of a loss of RWSP inventory through any postulated failure of the RWSP Purification System must be considered. Two separate conditions will be postulated, 1) a through-wall leak in the RWSP Purification piping and 2) a diversion of RWSP inventory when the RWSP Purification system is aligned to provide makeup to the Spent Fuel Pool (SFP). Additionally, the different safety functions of the RWSP in Mode 1-4 and Mode 5 and 6 must be assured. The following four specific cases are the only times where safety related operator action is required to isolate the RWSP Purification System.

Case 1, Mode 1-4

In this case it is assumed that either a moderate energy line break or a seismic event initiates a through-wall crack in the RWSP Purification System piping.

The safety function of the RWSP is to provide a source of borated water to the ECCS and CSS pumps during the initial phase of a LOCA. Technical Specification (TS) 3.5.4, applicable during Mode 1-4, requires a minimum level of 83% (475,500 gallons) indicated level in the RWSP. The Waterford 3 Engineering assessment of the gallons contained in the RWSP indicates that 478,793 gallons is equivalent to 83%. This discrepancy was documented in Condition Report CR-WF3-1997-0754. The analytical level that corresponds to the safety function is 76.4 % (440,721 gallons). The analytical level is based on ensuring an adequate volume of borated water is transferred to the Safety Injection Sump (SIS) such that the Net Positive Suction Head (NPSH) requirements for the ECCS pumps following re-alignment to the SIS are established. This will ensure the long term cooling recirculation phase in the event of a LOCA. NPSH margins are described in FSAR Section 6.2.2.3.2.1. A margin exists between the actual volume available to ensure NPSH and the manufacturer's required NPSH. This NPSH margin of approximately 1.29 ft. SIS level more than accounts for the combined instrument uncertainty for the RWSP water level and Recirculation Actuation Signal (RAS), which equates to approximately 0.13 ft SIS level. Therefore, it is acceptable to consider that instrument uncertainty is implicitly accounted for in the analytical level 76.4% due to the NPSH conservatism. The ECCS will remain operable and provide its safety function as long as the volume of borated water is at or above the analytical limit which includes uncertainties (76.4%, 440,721 gallons). Therefore, there is approximately 38,072 gallons (6.6%) of volume available in the RWSP beyond that credited for in accident mitigation.

For conservatism the through-wall crack in the RWSP Purification System piping is postulated at the worst location, which is downstream of the purification pump. This location provides the highest static head and developed head of the pump when it is running. Additionally for conservatism, the pump suction piping losses are ignored. The RWSP Purification pump total discharge head based on these assumptions is 214 feet or 92.8 psig. This will be the pipe internal pressure at the location of the crack.

The methodology outlined in UFSAR section 3.6.2.1.5.c states that fluid flow from a crack is based on a circular opening of area equal to that of a rectangle one-half pipe-diameter in length and one half-pipe wall thickness in width. The RWSP Purification pump discharge piping is 3" in diameter. The inside diameter is 2.9" with a wall thickness of 0.3". These dimensions will provide a rectangular opening of 0.2175 square inches which also equates to a 0.53" diameter circular opening. A crack this size with fluid pressure at 92.8 psig will result in a leak of approximately 48 gpm.

The actual level in the RWSP is normally maintained at greater than 85.8%, which is the setpoint for low level alarm. When the RWSP level drops below this value an alarm actuates in the control room and upon receipt the operator is procedurally directed to restore RWSP level. For this evaluation the initial level is conservatively assumed to be

83%, the TS minimum requirement. If a through-wall leak were to occur at a leakage rate of 48 gpm, it would take about 13 hours and 13 minutes to reach the analytical level assumed in analyses plus the uncertainties.

If the crack in the purification system cannot be isolated, the RWSP level would drop, assuming no make-up and the RWSP low low level alarm would actuate at 82.9%, rendering the RWSP inoperable in accordance with the TS level requirement. The alarm would require the control room operators to enter the Annunciator Response Procedure. This procedure directs the operator to refer to TS 3.5.4 and take actions to restore level in the RWSP by securing the valve alignment to RWSP Purification system, if aligned. Additionally, actions are included to direct the operator to add inventory to the RWSP. If level cannot be restored above the required minimum TS value (83%) within an hour, the action statement of TS 3.5.4 requires the unit be placed in hot standby within 6 hours and cold shutdown in the following 30 hours. Therefore, the TS would require a plant shutdown prior to reaching the level assumed in the analyses.

Case 2, Mode 1-4

In this case a diversion of RWSP inventory through the RWSP Purification system is postulated concurrent with a LOCA. The safety function of the RWSP remains the same as in Case 1, Mode 1-4. Additionally, 38,072 gallons is still the volume available between the analytical and TS level.

Make-up to the SFP is normally provided from the Condensate Storage Pool to account for water loss due to evaporation. However, for the purpose of this evaluation the RWSP Purification System is aligned for make-up to the SFP. With this alignment water could be diverted from the RWSP to the SFP at rate of 150 gpm through the RWSP Purification pump. This would result in an allowance of about 4 hours and 14 minutes available to secure the RWSP Purification system prior to reaching the volume needed to meet accident mitigation. The actual expected operator response time to terminate this scenario is less than 54 minutes. The actions considered in establishing this time are described below in "Operator Response Time." If the isolation valves are closed within the 54 minutes, no more than approximately 1.4% (8100 gallons) of the RWSP would be depleted.

Filling the SFP from the low level to the hi level requires less than 1% volume of the RWSP, and anytime the SFP is being filled the Operations procedure requires stationing a dedicated operator at the SFP to monitor level. Therefore with the existing procedural guidance and limited amount of makeup required to fill the SFP, the above stated time for operator action, 54 minutes, is very conservative.

Case 3, Mode 5-6

In this case it is assumed that either a moderate energy line break or a seismic event initiates a through-wall crack in the RWSP Purification System piping.
To ensure reactivity control capability in Mode 5 and 6, TS 3.1.2.7 requires either a Boric Acid Makeup Tank or the RWSP be available. An indicated level of 12% (65,465 gallons) in the RWSP is required by TS 3.1.2.7. The assessments performed by Waterford 3 Engineering of the gallons contained in the RWSP indicate that 69,223 gallons is equivalent to 12%. The analytical limit is 6.2% (35,765 gallons), which included approximately 5% of unusable volume. The instrument uncertainty is 3.18% (18,344 gallons). In Mode 5 & 6 RAS is bypassed, therefore, the uncertainties related to RAS are not included. The RWSP will provide its safety function as long as the volume of borated water is at or above the analytical limit including all uncertainties (9.38%, 54,109 gallons). Therefore, there is approximately 15,114 gallons of conservative volume available in the RWSP.

As in Case 1, Mode 1- 4 the estimated flow rate through a crack is 48 gpm. Therefore, the operator has approximately 5 hours and 14 minutes to isolate the leak. This is ample time for the operator to take action to stop the leak before potentially depleting below the required analytical volume.

Case 4, Mode 5-6

In this case a diversion of RWSP inventory through the RWSP Purification system is postulated, as described in Case 2. In Mode 5- 6, as described in Case 3, the margin between the analytical limit and TS limit for the RWSP is 15,114 gallons.

As in Case 2, the estimated flow rate while aligned to the SFP is 150 gpm. At this flow rate, the margin between the analytical and TS limit available would be depleted in 1 hour and 40 minutes. Also as in Case 2, it will take the operator no more than 54 minutes (8100 gallons or 1.4%) to isolate the RWSP. Therefore, sufficient volume remains in the RWSP to allow operator action and assure the safety function of the RWSP.

Filling the SFP from the low level to the hi level requires less than 1% volume of the RWSP, and anytime the SFP is being filled the Operations procedure requires stationing a dedicated operator at the SFP to monitor level. Therefore with the existing procedural guidance and limited amount of makeup required to fill the SFP, the above stated time for operator action, 54 minutes, is very conservative.

Required Actions for RWSP Purification Isolation

An operator would close FS-423 and FS-404 (safety class 3, seismic category I valves) in order to isolate the RWSP Purification System. As a contingency FS-425 or FS-428 (non-safety, seismic category I valves) may be closed, if FS-423 fails. Waterford-3 does not credit a single failure of FS-404. This is based on a core damage frequency of 1.8E-12 if FS-404 would fail to close. For further discussion see "Risk Perspective" in the following sections.

Operator Response Time

The time needed for an operator to take the actions to isolate the RWSP Purification system has been estimated to be no more than 54 minutes. This estimate is based upon the requirements included in ANSI/ANS 58.8-1984, "Time Response Design Criteria for Nuclear Safety Related Operator Actions." The standard gives time criteria for different plant conditions. In this evaluation the criteria for the most infrequent plant condition is used. Therefore, in accordance with ANS 58.8, the recommended time interval between accident indication and the earliest time operator action is initiated is assumed to be 20 minutes. Added to this is a minimum time for action completion, 5 minutes, plus one minute for each manipulation. For actions outside the control room performed by a remote operator additional time is added for the operator to make necessary preparations and to reach the location. Also each manipulation requires verification.

Based on the guidance contained in ANS 58.8, the following represents the assumptions that conclude it will take no more than 54 minutes for an operator to isolate make-up to the SFP from the RWSP. Included in this time line is an assumption that the valve fails to close or an operator fails to perform a task, which is required by ANSI N18.2a-1975. However for conservatism both are assumed: 1) while attempting to close the RWSP purification isolation valves FS-423 fails; and 2) an operator injury requires contacting the control room to send another operator to complete the valve closures (FS-425 or FS-428).

Accident Initiation:	20 minutes
Notify Remote Operator	5 minutes
Remote Operator accesses valves FS-404 & FS-423	5 minutes
Close valve FS-423	3 minutes
Close valve FS-404	3 minutes
Operator injury, contact control room	5 minutes
Control Room notifies second operator	5 minutes
Second Operator accesses valve FS-425 or FS-428	5 minutes
Close valve FS-425 or FS-428	3 minutes
Total Operator Action Time	54 minutes

Operator actions are also subject to the following restrictions based on ANSI/ANS 58.8-1984: 1) The locations where the action must be performed and the access routes thereto must be provided with emergency lighting. 2) The locations where the action must be performed and the access routes thereto must be provided with communication links to the control room. 3) The locations where the action must be performed and the access routes thereto must be qualified to adequately protect the operator from environmental conditions caused by the accident for the required access, action and return time. 4) The dose to an individual operator shall not exceed 5 Rem whole body, or its equivalent to any part of the body, for the duration of any accident.

These are satisfied as follows: 1) Emergency lighting is available along the access routes and where action must be performed. Additionally, operators are required to carry flashlights. 2) The Reactor Auxiliary Building (RAB) and areas where the components are located are equipped with phones and the operators are required to carry two-way radios for communication with the control room. 3) The environmental conditions in the area may change when the RWSP reaches the Recirculation Actuation Signal (RAS) or when Shutdown Cooling is placed in service. The boundary isolation valves (FS-423 & FS-404) are accessible before either of these plant conditions occur. If, however, RAS occurred before 54 minutes it would not be necessary to close FS-423 & FS-404 because the RWSP would have fulfilled its safety function. 4) Potentially high doses may exist if RAS occurs during the time available to isolate the purification system. If RAS has occurred and high dose rates exist, isolation of the purification system would not be necessary because the RWSP would have already fulfilled its safety function.

Therefore it has been demonstrated that the guidance contained in ANSI/ANS 58.8-1984 and ANSI N18.2a-1975 associated with operator action can be satisfied. Additionally, an operator can isolate the RWSP Purification System before the RWSP inventory drops below the value that has been credited for accident mitigation. If the RWSP level is reduced below TS limits appropriate operator actions will be taken to restore the level or commence a plant shutdown.

However it should be noted that the above operator response time determined in accordance with ANSI/ANS 58.8 is very conservative. The time needed to isolate the subject valves based on an actual plant walk down was approximately 11 minutes. Conservatively add 20 minutes to this value for accident initiation time. Therefore, the total time assumed for isolating of the RWSP Purification System is a conservative 31 minutes. This equates to a volume of 1488 gallons or about .25% of the RWSP volume.

Discussion of Margin

The analytical limit of 76.4% in Mode 1-4 and 6.2% in Mode 5 & 6 assures that the safety limit associated with the Design Basis Accident (DBA) analyses is not exceeded. Waterford 3 considers the margin between the analytical value and the TS limit to be the design margin. The additional volume needed to isolate the RWSP Purification System from the RWSP of 1.4% will be included in the revised analytical limit, thereby reducing the previous design margin.

RWSP Level Limits and Margin (%)

			Current		Proposed	
Scenario	TS Value	Instrument Uncertainty	Analytical Limit	Design Margin	Analytical Limit	Design Margin
Mode 1 -4	83	(1)	76.4	6.6	77.8	5.2
Mode 5, 6	12	3.18	6.2	2.63	7.6	1.22

(1) Instrument uncertainty is included in the Analytical Limit in Mode 1-4.

The volume of borated water contained in the analytical limit assures that the DBA analyses safety limits are met. The safety margin is the difference between the calculated values and the design criteria values for the safety limits. Therefore, because the new analytical limit is higher than previously calculated and assures that the required volume needed for the DBA analyses is still satisfied, the margin of safety is maintained.

Risk Perspective

The concern addressed by the proposed change is that if a LOCA were to occur simultaneously with an RWSP purification pipe break while the purification system was aligned to the RWSP or if a LOCA were to occur while the RWSP Purification System were aligned to the spent fuel pool, then borated water could be diverted from the suction of the ECCS pumps. There is no risk significance to this condition, based on the following bounding argument.

The annual frequency of a small LOCA is 4.5E-3. Only a small LOCA is considered because for the medium and large LOCAs, the system would be in the recirculation mode before an RWSP purification line leak could cause potential ECCS pump suction problems. During the time following the initiation of a LOCA, while the ECCS was taking suction from the RWSP, if a purification line failure occurred, ECCS could be affected. The probability of failure of the purification line is on the order of 1E-7 per hour, based on EPRI analyses. Assuming a conservative 12 hours to recirculation, the probability of a small LOCA with subsequent failure of the RWSP purification line is on

the order of 5E-9 per year. With about 13 hours and 13 minutes (time based on Case 1) available for the operators to manually close the isolation valve, the probability of operator failure is extremely small. Thus the probability of a small LOCA with failure of the purification piping and failure of the operators to isolate the leak is far below 5E-9 per year, and is negligible.

If a seismic event were to occur coincident with the small LOCA, and if the purification line were conservatively assumed to fail as a result, a similar scenario of leakage from the RWSP potentially affecting the ECCS suction could result. The frequency of an earthquake is 3.8E-5 per year, or 4.3E-9 per hour. Since this is over an order of magnitude less than the pipe failure probability in the previous scenario, this scenario is also of negligible risk.

If a small LOCA were to occur during the time that the RWSP Purification System was aligned to fill the SFP, the operators would also have to close the isolation valve to prevent diversion of the RWSP water from potentially affecting the ECCS pumps. This is a configuration occurring typically about once a month for about 30 minutes at a time, or an average probability of 7E-4. Multiplying by the small LOCA frequency of 4.5E-3 per year gives the probability of a small LOCA during the time when the RWSP Purification System is aligned to the SFP of 3.1E-6 per year. With about 4 hours and 14 minutes (time based on Case 2) available for the operators to manually close the isolation valve, the probability of operator failure is approximately 8E-3. Thus the annual probability of a small LOCA while the purification system is aligned to the SFP, and operator failure to isolate the purification system, causing a diversion of RWSP water that could affect the ECCS pumps is about 2.5E-8 per year. This is a negligible risk.

These same three scenarios could also occur during shutdown conditions (Modes 5 and 6). Although the first two cases involve somewhat less time for the operators to respond to isolate the purification line (5 hours-14 minutes (time based on Case 3) instead of 13 hours-13 minutes), the probability of a LOCA during shutdown is lower than at power, so the risk for these two scenarios is also negligible.

The third scenario is evaluated for shutdown conditions as follows. Over the past 3 refueling outages, the SFP was filled from the RWSP every 3.3 days, on average, with an average duration of 35 minutes. For an assumed outage duration of 62 days, and one outage per 1.5 years, this corresponds to a probability of 8E-4. The estimated frequency of a small LOCA during shutdown conditions, from the Waterford outage risk assessment model, is 1.2E-7 per hr. Converting this to an annual frequency for a 62 day outage every 1.5 years, gives 1.1E-4 per year. With about 1 hour and 40 minutes available for the operators to manually close the isolation valve, the probability of operator failure is approximately 5E-2. Thus the annual probability of a small LOCA during shutdown while the purification system is aligned to the SFP, and operator

failure to isolate the purification system, causing a diversion of RWSP water that could affect the ECCS pumps is about 5.0E-9 per year. This risk is negligible.

Finally, the risk significance of a failure of the manual valve FS-404 to close can be estimated using the preceding risk results. The highest risk value was for the Modes 1-4 scenario of a small LOCA during the time that the RWSP Purification System was aligned to fill the SFP, but in this scenario, closure of FS-404 would not be needed since it is not in the RWSP to SFP line. The next highest probability scenario was the small LOCA with failure of the purification piping and failure of the operators to isolate the leak, with an annual probability of much less than 5E-9. The probability of a manual valve failing to close is 3.5E-4, from generic industry data used in the Waterford PSA. (There is insufficient data to estimate a plant-specific failure rate.) If this failure probability is multiplied by the probability of a small LOCA with failure of the purification piping, 5E-9, the probability of a small LOCA with failure of the purification piping and failure of FS-404 to close is 1.8E-12 per year. This is negligible.

Flooding Outside Containment

The RWSP Purification System is a non-nuclear safety related moderate energy piping system. The component database indicates that a majority of the piping is designed non-ASME and non-seismic. Following a seismic event, a pipe through-wall crack event or a diversion of RWSP inventory there is a potential for flooding safety-related equipment. The flooding analysis was reviewed and verified to already contain the maximum postulated leak from the RWSP Purification piping for flooding concerns outside containment. The results of this analysis indicate that a leak from the RWSP Purification System piping would not prohibit operation of any safety-related equipment located in the area.

Jet Impingement

Two jets from blowdown lines 6BD2-46 and 6BD8-48 in the vicinity of the RWSP Purification return piping have been identified. A calculation evaluated the potential damage associated with a jet impingement to the RWSP Purification System. The results of the calculation indicate that the jet impingement would not cause a failure of the RWSP Purification return piping.

Conclusions

It has been demonstrated that the RWSP Purification System boundary isolation valves can be maintained in the open position. This alignment will require that the valves be

capable of performing an active safety function. Therefore, the valves will be added to the In Service Test (IST) Plan and tested for active closed safety function. Adding these valves to the IST plan will provide a greater assurance that the valves will operate properly when needed to provide a safety related boundary for the RWSP.

Evaluation for Significant Hazards Consideration

In accordance with 10CFR50.92, a proposed change to the operating license involves no significant hazards consideration if operation of the facility in accordance with the proposed change would not: (1) involve a significant increase in the probability or consequences of any accident previously evaluated; (2) create the possibility of a new or different kind of accident from any accident previously evaluated; or (3) involve a significant reduction in a margin of safety.

The proposed change, i.e., operating with the Refueling Storage Water Pool (RWSP) Purification System Boundary Isolation Valves open, has been evaluated against these three criteria, and it has been determined that the change does not involve a significant hazard.

The proposed change will allow the manual valves (FS-423 and FS-404) that isolate the RWSP from the RWSP Purification System to be maintained open. The RWSP Purification System is aligned to the RWSP to maintain the purity and clarity of the borated water contained in the pool. The RWSP is also one of two means of makeup to the Spent Fuel Pool (SFP), with the Condensate Storage Pool being the primary makeup source. These manual valves provide the boundary between the seismically qualified safety related RWSP and the non-seismic, non-safety related RWSP Purification System.

(1) The proposed activity does not involve a significant increase in the probability or consequences of any accident previously evaluated.

The RWSP is not involved in any initiating event that could result in any accident. The RWSP has a safety function that assists in accident mitigation.

The proposed change has been reviewed against Engineering Standards and Licensing requirements contained in the Updated Final Safety Analysis Report (UFSAR). This review has concluded that use of operator action to isolate the RWSP Purification System Boundary Isolation valves or secure the RWSP Purification pump, as necessary, will allow the RWSP to perform its safety function in any plant mode. The RWSP, however, is not required to perform a safety function concurrent with a seismic event. The highest estimated annual probability of a small Loss of Coolant Accident (LOCA) while the purification

system is aligned to the SFP, and operator failure to isolate the purification system, causing a diversion of RWSP water that could affect the Emergency Core Cooling System (ECCS) pumps is about 2.5E-8 per year, which is considered a negligible risk.

Therefore, the proposed activity does not involve a significant increase in the probability or consequences of any accident previously evaluated.

(2) The proposed activity does not create the possibility of a new or different kind of accident from any accident previously evaluated.

The RWSP Purification System was intended to be aligned periodically to the RWSP. The proposed change will allow the RWSP Purification System to be normally aligned to the RWSP through manually operated open valves. It has been shown that operator action can be credited to isolate the RWSP Purification System in a sufficient time to ensure the safety function of the RWSP is maintained. If Recirculation Actuation Signal (RAS) occurs the isolation valves will become inaccessible due to high dose rates in the general area. However if the RAS occurs before an operator can isolate the RWSP (i.e. 54 minutes), the RWSP Purification System would not have to be isolated because the RWSP would have fulfilled its required safety function.

The proposed alignment to maintain the RWSP Purification System isolation valves open introduces a new system interaction during a LOCA. However, it has been demonstrated that the safety function of the RWSP is assured assuming the new system interaction.

Therefore, the proposed activity does not create the possibility of a new or different kind of accident from any accident previously evaluated.

(3) The proposed activity does not involve a significant reduction on a margin of safety.

It has been evaluated that it will take no more than 54 minutes for operations personnel to isolate the RWSP. During this time approximately 1.4% of the RWSP level could be depleted assuming maximum leakage. This volume will be incorporated into the analytical limit. The proposed analytical limit will continue to assure the safety limits evaluated in the Design Basis Accident (DBA) analyses are maintained.

Therefore, this proposed activity does not involve a significant reduction in the margin of safety.

Environmental Impact Consideration

The proposed request was evaluated against the criteria of 10CFR51.22 for environmental considerations. The proposed changes do not significantly increase individual or cumulative occupational exposures, do not significantly change the types or significantly increase the amounts of effluents that may be released offsite; and, as discussed in this attachment, do not involve a significant hazards consideration. Considering the foregoing, it has been concluded that the proposed change meets the criteria given in 10CFR51.22 for categorical exclusion from the requirement for an Environmental Impact Statement.

ATTACHMENT 2 to W3F1-2001-0007

Marked-Up UFSAR Pages

3.2 CLASSIFICATION OF STRUCTURES, COMPONENTS ANI) SYSTEMS

3.2.1 SEISMIC CLASSIFICATION

In compliance with General Design Criterion 2, plant structures, systems and components which are important to safety are designed to remain functional in the event of a safe shutdown earthquake (SSE) if they are necessary to assure:

a) the integrity of the reactor coolant pressure-boundary,

b) the capability to shutdown the reactor and maintain it in a safe shutdown condition, or

c) the capability to prevent or mitigate the consequences of accidents which could result in potential offsite exposures comparable to the guideline exposure of 10CFR100.

Plant structures, systems and components, including their foundations and supports, that are designed to remain functional in the event of a safe shutdown earthquake are designated as seismic Category I, as indicated in Table 3.2-1. The seismic classifications are consistent with the recommendations of Regulatory Guide 1.29, "Seismic Design Classification", August 1973, with a clarification noted in Table 3.2-1 for the reactor coolant pump bearing oil, cooling systems, and refuel water storage pool.

For systems which are partially seismic Category I, the seismic Category I portion includes all components within the seismic boundary and extends to the first seismic restraint beyond the boundary.

All seismic Category I structures, systems and components are analyzed under the loading conditions discussed in Section 3.7.

Non-seismic structures, systems and components are those whose failure would not result in the release of significant radioactivity and would not prevent reactor shutdown or degrade the operation of Engineered Safety Feature Systems. Their failure may, however, interrupt power generation.

The occurrence of adverse interaction between safety and non-safety related components during SSE events are eliminated by adherence to the following:

a) Whenever practical, the safety related components are separated from the non-safety related components to ensure that failure of the nonsafety related component due to a SSE will not result in loss of function to the safety related components.

b) In those areas where adequate separation is not possible, the nonsafety related components are provided with seismic supports, or barriers are provided between the safety related and non-safety related components.

Where only portions of systems are identified as seismic Category I, the boundaries of the seismic Category I portions of the system are shown on the piping and instrument diagrams in appropriate sections of this FSAR.

ITEMIZED NOTES (Cont'd)

13. All structures, systems and components identified as Seismic Category I receive the 10CFR50 Appendix B Quality Assurance Program consistent with their safety function. Safety-related Seismic Category I items receive the full Quality Assurance Program while NNS Seismic Category I items receive the full Quality Assurance Program while NNS Seismic Category I items receive the pertinent quality assurance requirements specified in the Quality Assurance Program.

14. Collectively identifies safety-related components, including equipment in Cooling Tower Areas.

15. Operational 10CFR50 Appendix B QA is applied for HEPA filter & charcoal absorber.

16. Safety and seismic considerations meet the requirements of NUREG-0737

17. These items will receive applicable 10CFR50 Appendix B QA during the operational phase Items/services will be procured whenever possible from a vendor with a 10CFR50 Appendix B QA program. When this is not possible, additional steps will be taken by LP&L QA, such as a detailed receiving inspection to assure that it performs its required functions.

18. Isolators that connect the protective systems (Class 1E) to the plant computer (non-Class 1E) are Class 1E and seismic Category I.

19. This table is an overview of the structures, components, and systems. Refer to the station's Master Equipment List, process and instrument diagrams, and control wiring diagrams for further detail.

20. The Hydrogen Recombiner has no piping and valves.

21. Suction pressure and lube oil pressure switches on charging pumps are Safety Class N2 (C-E Quality Class 2B).

22. The ICCI SYstem is environmentally and seismically qualified. Out-of-vessel components, i.e., cables and connectors are environmentally qualified in accordance with IEEE-323-1974. In addition, the HJTC System has been extensively tested and verified under conditions similar to what it may encounter during an ICC event. The CET's have also been tested and verified to function up to a temperature of 2300F. The ICCI System will be installed and operational prior to first cycle commercial operation. Although all cabling for the CET's is qualified to Class 1E criteria, some of the cabling is run in NNS cable trays, see Appendix 1.9A for details.

23. The canal, pools, and their liners are classified as structures and are therefore not assigned a safety class, but are designed and constructed as seismic Category I under the 10CFR50 Appendix B requirements. The liners and their nozzles are constructed to ASME Section VIII code requirements using ASME Section III materials.

24. Pressure switches PS-HV-5222 AS and BS function only to alarm on a loss of instrument air. This alarm function will not be lost as a result of a failure of the associated tubing. Therefore, the signal process tubing for these switches has been classified non-safety.

25. Detector design criteria is discussed in Subsection 6.4.4.2.

26. ATWS instrumentation and components will receive NRC QA guidance for ATWS equipment, NRC Generic Letter 85-06, Quality Assurance Guidance for ATWS Equipment that is not safety related.

27. CEDM Exhaust Fan Motor cable/connector assemblies design criteria is discussed in Section 9.5.4.7.

28. Pressure relieving devices may have administratively controlled manual block valves installed in their downstream piping.

29. The Refuel Water Storage Pool (RWSP) is designed in accordance with the recommendations of Regulatory Guide 1.29 "Seismic Design Classification" with exception to footnote 1. Regulatory Guide 1.29 recommends that the system boundary include portions of the system required to accomplish the specified safety function and connected piping up to and including the first valve that is either normally closed or capable of automatic closure when the safety function is required. The RWSP purification system is non-safety and connected to the RWSP by normally open, manual isolation valves. Operator action may be required to isolate the purification system from the RWSP.

TABLE 3.2-1 (Sheet 22 OF 25)

	Safety Class	Seismic Category	Tornado* Wind Criterion	Flood** Criterion	Notes
Inadequate Core Cooling Instrumentation (II.F.2)	IE	I	b	b	17, 22
1. Saturation Margin Monitor					
2. Heated Junction Thermocouples					
3. Core Exit Thermocouples					
4. Signal Processing and Display					
Miscellaneous					
Spent and New Fuel Storage Racks	-	I	b	b	
Main Control Panel	IE	I	b	b	
Containment Vacuum Relief System	2	I	b	b	7, 12, 18
FHB Bridge Crane	-	I	b	b	
Reactor Polar Crane	-	I	b	b	
Containment Piping Penetrations	2	I	b	b	
Radwaste Cask Handling Bridge Crane	-	I	b	b	
Maintenance Hatch Shielding Door	-	I	b	b	
Auxiliary Control Panel (Hot Shutdown) (Table 7A--3)	IE	I	b	b	7, 18
Reactor Building Canal Liner	-	I	b	b	23
FHB Spent Fuel & Spent Fuel Cask Storage Pools & Pool Liners	-	I	b	b	23
RAB Condensate & Refueling Water Storage Pools and Pool Liners	-	I	b	b	23, 29
Fuel Transfer Tube and Penetration Assembly	2	I	b	b	
UHS Sump Pumps (Cooling Tower Areas)	NNS	(d)	b	b	17
Decontamination - Area Structure	-	I	b	b	
Meterological data collection equip.	NNS	-	-	-	17
Containment - Personnel Lock, equipment hatch and escape lock	2	I	b	b	
Annulus access lock	-	I	a	a	
Plant-safety-parameter display console (I.D.2)	NNS	-	b	b	17, 18
Engineered safety features actuation system	IE	I	b	b	7, 18
RCP Oil Collection System	NNS	-	b	b	
ATWS Mitigating Systems	IE or NNS	1 or -	b	b	26

* Tornado Wind Criterion (Section 3.3)

a. Structure or component is designed to withstand design wind.

b. The system or components are housed within a structure which is designed to withstand the design wind.

**Flood Criterion (Section 3.4)

a. Structure or component is part of NPIS which is protected against flooding.

b. System or component is housed within another structure (NPIS) designed to protect against flooding.

TABLE 3.9-9 (Sheet 12 of 22) Revision 10 (10/99)

NON-NSSS SUPPLIED ACTIVE VALVES AND PUMPS

ADD INSERT No. 1

Equipment	UNID	Ebasco No.	Qnty	Type	Operator	Manufacturer	Safety Class	Design Rating	Size	Function
EDG Standby LO Pump Discharge Check	EGLMVAAA208A EGLMVAAA208B	KSV-58-4 (drawing #)	2	Check	-	Anderson Greenwood	3	150 psig 225 °F	6"	Open
EDG Lube Oil Temp. Control	EGLMVAAA209A EGLMVAAA209B	KSV-58-4 (drawing #)	2	3-way	Thermo-static	Amot Control	3	150 psig 500 °F	6"	Operate
Fire Protection System (FP)										
FP Header Containment Isol.	FPMVAAA601A FPMVAAA601B	2FP-F127 2FP-F129	2	Globe	Diaphragm	WKM	2	175 psig 125 °F	3"	Close
RCB FP Header Check	FPMVAAA602A FPMVAAA602B	2FP-V128 2FP-V130	2	Check	-	TRW Mission	2	175 psig 125 °F	3"	Close
Feedwater System (FW)										
SG Startup Feedwater Reg.	FWMVAAA166A FWMVAAA166B	5FW-FM835 5FW-FM836	2	Gate	Diaphragm	Fisher Controls	4 (Note 1)	1,400 psig 480 °F	6"	Close
SG Main Feedwater Reg.	FWMVAAA173A FWMVAAA173B	5FW-FM833 5FW-FM834	2	Angle	Diaphragm	Fisher Controls	4 (Note 1)	1,400 psig 480 °F	16"	Close
FW to EFW Hdr Pressurizing	FWMVAAA1763A FWMVAAA1763B	3FW-V633 3FW-V634	2	Check	-	Velan	3	1,400 psig 200 °F	1"	Open/ Close
Feedwater to SG Check	FWMVAAA181A FWMVAAA181B	2FW-V821A 2FW-V822B	2	Check	-	Anchor Darling	2	1,400 psig 480 °F	20"	Close
SG Main Feedwater Isol.	FWMVAAA184A FWMVAAA184B	2FW-V823A 2FW-V824B	2	Gate	Hydraulic	Anchor Darling	2	1,400 psig 480 °F	20"	Close
Gaseous Waste Management System (GWM)										
Containment Vent Header Isol.	GWMMVAAA104 GWMMVAAA105	2WM-F157A/B 2WM-F158A/B	2	Diaphragm	Diaphragm	ITT Grinnell	2	150 psig 200 °F	1"	Close
Hydrogen Recombiner and Analyzer System (HRA)										
H_2 Analyzer Sample Pumps	HRAMPMP0001A HRAMPMP0001B	N/A	2	Diaphragm	Motor	Air Dimensions	2	0.5 CFM 350 °F	-	Operate
Cntmt Dome Area HRA Sample Isol.	HRAISV0101A HRAISV0101B	2HA-E601A 2HA-E621B	2	Globe	Solenoid	Valcor	2	100 psig 350 °F	3/8"	Open

NON-NSSS SUPPLIED ACTIVE VALVES AND PUMPS

Equipment	Tag No.	Ebasco No.	Quantity	Type	Operator	Manufacturer	Safety Class	Design Rating	Size	Function
Fuel Pool Cooling & Purification (FS)										
RWSP Purification Pump Suction Isol. From RWSP	FSMVAAA423	3FS-V135A/B	1	Gate	Manual	Anchor Darling Valve Co.	3	50 psig 125 °F	3"	Close
Fuel Pool Ion Exchanger to RWSP Isolation	FSMVAAA404	3FS-V123	1	Diaphragm	Manual	ITT Grinnell	3	150 psig 200 °F	3"	Close

ADD

INSERT NO. 1

FSAR FIGURE 6.2-35

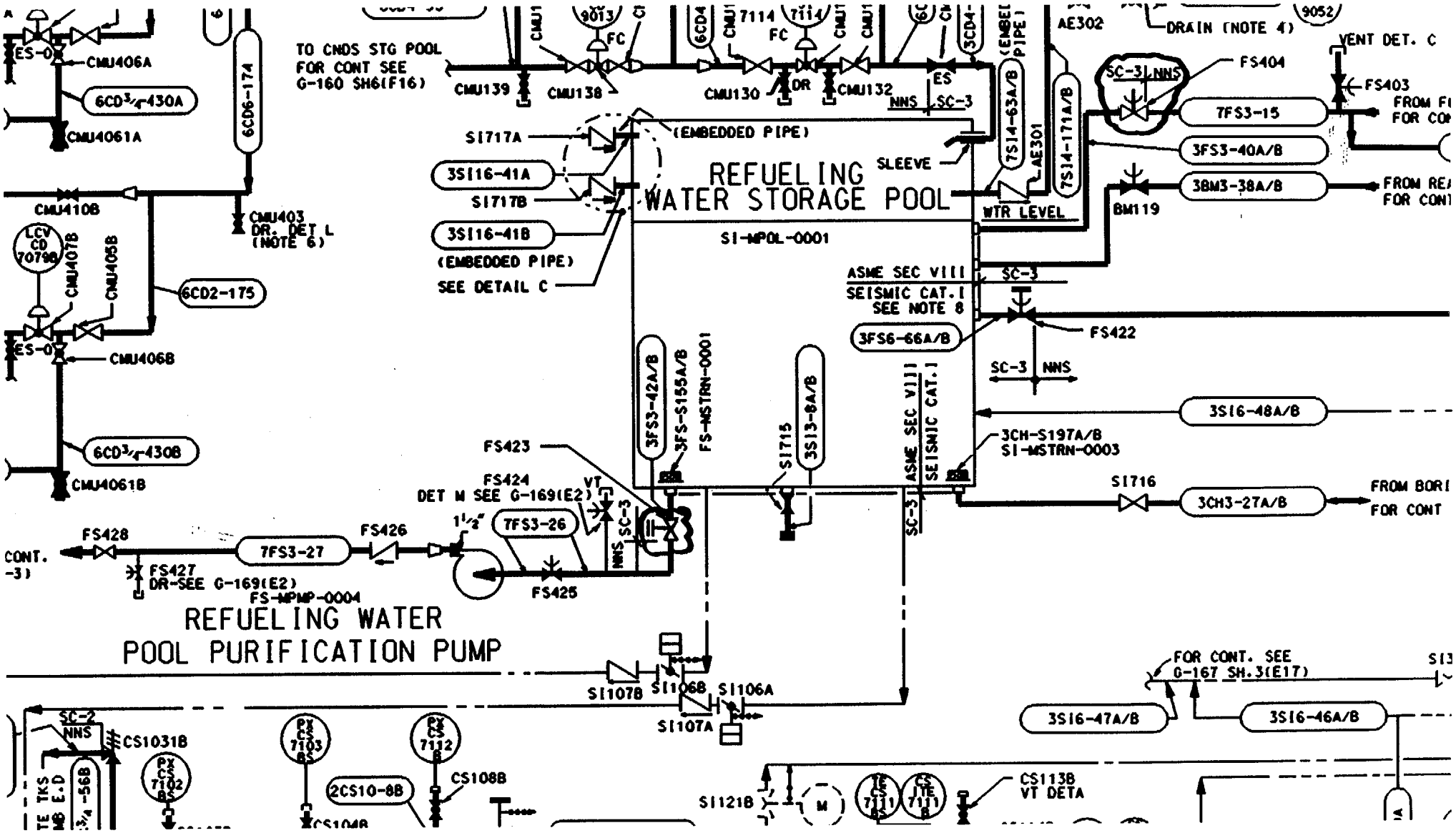

ATTACHMENT 3 TO W3F1-2001-0007

Commitments

COMMITMENT IDENTIFICATION/VOLUNTARY ENHANCEMENT FORM

Attachment 3 to W3F1-2001-0007
Request for Review and Approval of Design Basis Change Regarding Realignment of Refueling Water Storage Pool (RWSP) Boundary Isolation Valves to RWSP Purification System

COMMITMENT(S)	ONE-TIME ACTION*	CONTINUING COMPLIANCE*	SCHEDULED COMPLETION DATE (IF REQUIRED)	ASSOCIATED CR OR ER
FS-423 & FS-404 will be added to the In Service Test (IST) Plan and tested for active closed safety function.	X			CR-WF3-1996-1282
The additional volume needed to isolate the RWSP Purification System from the RWSP of 1.4% will be included in the revised analytical limit.	X			

*Check one only

VOLUNTARY ENHANCEMENT(S)	ASSOCIATED CR OR ER