50-280/281

Dominion

Pamela F. Faggert
Vice President and Chief Environmental Officer
5000 Dominion Boulevard, Glen Allen, VA 23060
Phone: 804-273-3467

March 21, 2001

HAND DELIVERED

Oula K. Shehab
Piedmont Regional Office
Department of Environmental Quality
4949-A Cox Road
Glen Allen, VA 23060-5106

Re: Surry Power Station - VPDES Permit No. VA0004090 - Application for Reissuance

Dear Ms. Shehab:

Enclosed are the original and five copies of the application for reissuance of the VPDES permit for Surry Power Station. This application covers all process-related discharges. Authorization of storm water discharges as previously permitted is also requested.

The data provided on the Intake and Effluent Characteristics forms (2C, V) were generated from Discharge Monitoring Reports for the 3-year period ending August 2000, and special sampling for the additional Form 2C parameters during August 2000. Sampling and analysis of the discharges was conducted in accordance with sampling and analysis variances and waivers approved for previous permit applications.

We request waivers from some of the specified permit application requirements in the following issues:

1. Essentially identical discharges- Outfalls 102, 103, 106, 110, 111, 112, 113 and 120 are all low volume process wastewater sumps that have identical or similar contaminants and concentrations, and receive comparable treatment prior to discharge. Outfalls 102 and 113 were sampled and analyzed to characterize all of these outfalls for parameters not included in the DMR data. Outfalls 114 and 115 are identical steam generator blowdown discharges; both are characterized by samples from 114. Outfalls 118 and 119 are identical condenser hot well drains; 118 was sampled to provide information for both. We request waivers from individual sampling and analysis of the characterized outfalls.

C001

2. Non-contact cooling waters- Outfall 001 is a large volume flow, once through, non-contact cooling water. We request waivers from any parameters not provided in Section V. Analysis, testing and reporting on this discharge are currently being conducted in accordance with the Toxics Management Program contained in the current VPDES permit, which we expect will be continued in the reissued permit. Due to the size and nature of the discharge, we do not believe that additional analyses would more accurately represent plant processes or the impact of station operations.

3. Intermittent, non-wastewater discharges- Outfalls 002, 105, 107, 121 and 122 are low volume, non-process discharges that do not fall under the Steam Electric Effluent Guidelines. The 002 and 105 discharges consist entirely of storm water and involve no process wastes. Outfall 107 is, initially, a discharge of deionized lay-up water from the package boiler that is only occasionally released after storage periods. (After lay-up, the boiler water is analyzed for hydrazine and no discharge occurs unless, or until, the residual concentration of hydrazine is low enough to be non-detectable in the final discharge.) During package boiler operation, the discharge consists of deionized water with trace (1 ppm) concentrations of trisodium phosphate and sodium sulfite. Outfalls 121 and 122 discharge deionized water that has been filtered after hydrolasing of the steam generators. Since these discharges do not occur often enough to be included in the sampling conducted for this application, data supplied for these outfalls are from the limited historical data and information. We request waivers from all other testing requirements not provided in the application.

4. Uncontaminated side streams- Outfalls 116 and 117 are portions of the non-contact cooling water that are diverted through the recirculation spray heat exchangers. No process wastewater or pollutants from other sources are added. Only DMR data are provided. We request that requirements for any other testing not provided in the application be waived.

We also request that the following issues be considered in the reissuance of the permit:

1. Outfall 002 requirements- As with the current permit, we request that the size, nature and location of the 002 discharge be reconsidered and professional judgement be applied in evaluation of appropriate limitations, monitoring requirements, and other conditions applied to this outfall. The 002 discharge consists of storm water from an oil tank containment berm. The discharge is small, very infrequent and goes into a small ditch far from any natural watercourse. Due to the sandy soil, most of the discharge seeps into the ground before entering the ditch's drainage to a small, unnamed tributary that then flows a considerable distance, through beaver pond areas, before entering the swamp at Hog Island. Unless there is a significant storm event with runoff from the entire surrounding area, effluent from the 002 discharge cannot flow offsite. The entire ditch that receives the Outfall 002 flow is well within the property boundaries and any discharge during usual conditions would soak into the ground or evaporate before reaching beyond Virginia Power property or reaching any watercourse. We do

not believe that extensive monitoring and analyses are necessary at this outfall to provide adequate protection of human health and the environment.

2. Storm water- As noted in our earlier application for authorization of storm water discharges, all industrial processes at Surry Power Station are under roof and not exposed to storm water. Those station wastewater discharges that enter storm water conveyances are treated and monitored prior to mixing with storm water. We request that the reissued permit follow the DEQ policy applied in the current permit in which the storm water discharges received authorization without additional monitoring requirements.

3. Alternative effluent limitations- As stated during application for the current permit, and noted in Special Condition 13 of the current permit, there have been no substantial changes in the conditions described in our request for a variance under CWA Section 316(a). We request that the recognition of the 316(a) variance be continued in the reissued permit.

4. Intake studies- As required by the initial permits for Surry Power Station, intake studies were performed to demonstrate the acceptability of the cooling water intake impacts in accordance with CWA Section 316(b). The required reports of these studies were subsequently submitted and accepted by the SWCB. However, recognition of the satisfactory demonstration of this issue was not, as with the 316(a) issue, documented in subsequent permits. We request that the recognition of the satisfactory demonstration of the 316(b) issue be incorporated in the reissued permit.

5. Reduced monitoring requirements- We request that the policies for reduced monitoring requirements be considered and applied to the reissued permit wherever possible. In particular, several internal outfalls currently have effluent monitoring for oil and grease that we believe may be deleted. In most cases, these outfalls have never contained oil and grease in their effluents and, in fact, have no actual or potential sources for oil and grease contribution. In light of coming changes in oil and grease analysis, and the health and safety dangers presented, we believe it would be appropriate to remove such requirements at all outfalls where the contaminants are not present or likely. In addition to these other concerns, samples from the Radwaste Facility (#109) must be handled as potentially radioactive materials and processed in an appropriately equipped lab; further increasing the costs and logistics problems for samples with no oil and grease constituents.

6. Additional available information- Since this is application for reissuance of a permit for an existing facility that has been authorized, limited and monitored under prior permits, extensive relevant information has previously been submitted to the DEQ. We request that the agency files on this facility be considered a part of this application as a source for additional information that may be needed in support of the present application and permit development.

Should you desire additional information or have any questions, please contact Daniel James at (804) 273-2996. You are invited to visit the station as early as possible in the permit development procedure, at your convenience, to become familiar with the equipment, processes and layout or to clarify any questions or concerns you may have. Please contact Mr. James to make arrangements for your visits.

Sincerely,

Pamela F. Faggert

Pamela F. Faggert

cc w/ attachments:
U.S. Nuclear Regulatory Commission
Region II
101 Marietta St., NW
Suite 2900
Atlanta, GA 30323
Re: Surry Units 1 & 2
Docket Nos. 50-280/50-281
License Nos. DPR-32/DPR-37

U.S. Nuclear Regulatory Commission
Document Control Desk
Washington, DC 20555
Re: Surry Units 1 & 2
Docket Nos. 50-280/50-281
License Nos. DPR-32/DPR-37

NRC Senior Resident Inspector
Surry Power Station

ase print or type in the unshaded areas only
-in areas are spaced for elite type, i.e., 12 characters/inch).

Form Approved. OMB No. 2040-0086. Approval expires 5-31-92.

FORM 1 GENERAL

EPA

U.S. ENVIRONMENTAL PROTECTION AGENCY

GENERAL INFORMATION

Consolidated Permits Program

(Read the "General Instructions" before starting.)

I. EPA I.D. NUMBER

S F VA0004090 T/A C D

1 2 13 14 15

LABEL ITEMS

I. EPA I.D. NUMBER

III. FACILITY NAME

V. FACILITY MAILING ADDRESS

VI. FACILITY LOCATION

PLEASE PLACE LABEL IN THIS SPACE

GENERAL INSTRUCTIONS

If a preprinted label has been provided, affix it in the designated space. Review the information carefully; if any of it is incorrect, cross through it and enter the correct data in the appropriate fill-in area below. Also, if any of the preprinted data is absent *(the area to the left of the label space lists the information that should appear)*, please provide it in the proper fill-in area(s) below. If the label is complete and correct, you need not complete Items I, III, V, and VI *(except VI-B which must be completed regardless)*. Complete all items if no label has been provided. Refer to the instructions for detailed item descriptions and for the legal authorizations under which this data is collected.

II. POLLUTANT CHARACTERISTICS

INSTRUCTIONS: Complete A through J to determine whether you need to submit any permit application forms to the EPA. If you answer "yes" to any questions, you must submit this forms and the supplemental form listed in the parenthesis following the question. Mark "X" in the box in the third column if the supplemental form is attached. If you answer "no" to each question, you need not submit any of these forms. You may answer "no" if your activity is excluded from permit requirements; see Section C of the instructions. See also, Section D of the instructions for definitions of **bold-faced terms.**

SPECIFIC QUESTIONS	MARK 'X' YES	NO	FORM ATTACHED
A. Is this facility a **publicly owned treatment works** which results in a **discharge to waters of the U.S.?** (FORM 2A)	16	X 17	18
C. Is this a facility which currently results in **discharges to waters of the U.S.** other than those described in A or B above? (FORM 2C)	X 22	23	X 24
E. Does or will this facility treat, store, or dispose of **hazardous wastes?** (FORM 3)	28	X 29	30
G. Do you or will you inject at this facility any produced water or other fluids which are brought to the surface in connection with conventional oil or natural gas production, inject fluids used for enhanced recovery of oil or natural gas, or inject fluids for storage of liquid hydrocarbons? (FORM 4)	34	X 35	36
I. Is this facility a proposed **stationary source** which is one of the 28 industrial categories listed in the instructions and which will potentially emit 100 tons per year of any air pollutant regulated under the Clean Air Act and may affect or be located in an **attainment area?** (FORM 5)	40	X 41	42

SPECIFIC QUESTIONS	MARK 'X' YES	NO	FORM ATTACHED
B. Does or will this facility *(either existing or proposed)* include a **concentrated animal feeding operation** or **aquatic animal production facility** which results in a **discharge to waters of the U.S.?** (FORM 2B)	19	X 20	21
D. Is this a proposed facility *(other than those described in A or B above)* which will result in a **discharge to waters of the U.S.?** (FORM 2D)	25	X 26	27
F. Do you or will you inject at this facility industrial or municipal effluent below the lowermost stratum containing, within one quarter mile of the well bore, underground sources of drinking water? (FORM 4)	31	X 32	33
H. Do you or will you inject at this facility fluids for special processes such as mining of sulfur by the Frasch process, solution mining of minerals, in situ combustion of fossil fuel, or recovery of geothermal energy? (FORM 4)	37	X 38	39
J. Is this facility a proposed **stationary source** which is NOT one of the 28 industrial categories listed in the instructions and which will potentially emit 250 tons per year of any air pollutant regulated under the Clean Air Act and may affect or be located in an **attainment area?** (FORM 5)	43	X 44	45

III. NAME OF FACILITY

C 1 SKIP Surry Power Station

15 16-29 30 69

IV. FACILITY CONTACT

A. NAME & TITLE *(last, first, & title)*

C 2 Pamela F. Faggert, V.P.

15 16 45

B. PHONE *(area code & no.)*

804 273 3467

46-48 49-51 52-55

V. FACILITY MAILING ADDRESS

A. STREET OR P.O. BOX

C 3 5000 Dominion Blvd., EP&C

15 16 45

B. CITY OR TOWN

C 4 Glen Allen

15 16 40

C. STATE VA 41 42

D. ZIP CODE 23060 47-51

VI. FACILITY LOCATION

A. STREET, ROUTE NO. OR OTHER SPECIFIC IDENTIFIER

C 5 State Route 650

15 16 45

B. COUNTY NAME

Surry

46 70

C. CITY OR TOWN

C 6 Surry

15 16 40

D. STATE VA 41 42

E. ZIP CODE 23883 47-51

F. COUNTY CODE *(if known)* 52-54

CONTINUE ON PAGE 2 OF 2

EPA Form 3510-1 (Rev. 8-90)

EPA I.D. NUMBER (from Item I, Page 1 of 2)
VA0004090

CONTINUED FROM PAGE 1 OF 2

VII. SIC CODES (4-digit, in order of priority)

A. FIRST: 4911 (specify) ELECTRICAL SERVICES

B. SECOND: C 7 (specify)

C. THIRD: (specify)

D. FOURTH: C 7 (specify)

VIII. OPERATOR INFORMATION

A. NAME: Dominion Generation

B. Is the name listed in Item VIII-A also the owner? ☐ YES ☒ NO

C. STATUS OF OPERATOR (Enter the appropriate letter into the answer box; if "Other", specify.)
F = FEDERAL
S = STATE
P = PRIVATE
M = PUBLIC (other than federal or state)
O = OTHER (specify)
P (specify)

D. PHONE (area code & no.): C A 804 273 3346

E. STREET OR P.O. BOX: 5000 Dominion Blvd.

F. CITY OR TOWN: C B Glen Allen

G. STATE: VA

H. ZIP CODE: 23060

IX. INDIAN LAND
Is the facility located on Indian lands? ☐ YES ☒ NO

X. EXISTING ENVIRONMENTAL PERMITS

A. NPDES (Discharges to Surface Water): C T I 9 N VA0004090

B. UIC (Underground Injection of Fluids): C T I 9 U

C. RCRA (Hazardous Wastes): C T I 9 R VAD000619502

D. PSD (Air Emissions from Poposed Sources): C T I 9 P

E. OTHER (specify): C T I 9 SE-16C (specify) Groundwater w/dr

E. OTHER (specify): C T I 9 50336 (specify) Air permit reg.

XI. MAP

Attach to this application a topographic map of the area extending to at least one mile beyond property boundaries. The map must show the outline of the facility, the location of each of its existing and proposed intake and discharge structures, each of its hazardous waste treatment, storage, or disposal facilities, and each well where it injects fluids underground. Include all springs, rivers and other surface water bodies in the map area. See instructions for precise requirements.

XII. NATURE OF BUSINESS (provide a brief description)

Generation of electricity with steam produced by the fission of nuclear fuel.

XIII. CERTIFICATION (see instructions)

I certify under penalty of law that I have personally examined and am familiar with the information submitted in this application and all attachments and that, based on my inquiry of those persons immediately responsible for obtaining the information contained in the application, I believe that the information is true, accurate and complete. I am aware that there are significant penalties for submitting false information, including the possibility of fine and imprisonment.

A. NAME & OFFICIAL TITLE (type or print)
Pamela F. Faggert
V.P. & Chief Environmental Officer

B. SIGNATURE: Pamela F. Faggert

C. DATE SIGNED: 3-21-01

COMMENTS FOR OFFICIAL USE ONLY

EPA Form 3510-1 (Rev. 8-90)

lease print or type in the unshaded areas only.

EPA I.D. NUMBER (copy from Item I of Form 1)
VA0004090

Form Approved. OMB No. 2040-0086
Approval expires 5-31-92

FORM 2C NPDES

U.S. ENVIRONMENTAL PROTECTION AGENCY
APPLICATION FOR PERMIT TO DISCHARGE WASTEWATER
EXISTING MANUFACTURING, COMMERCIAL, MINING AND SILVICULTURAL OPERATIONS
Consolidated Permits Program

I. OUTFALL LOCATION

For each outfall, list the latitude and longitude of its location to the nearest 15 seconds and the name of the receiving water.

A. OUTFALL NUMBER (list)	B. LATITUDE 1. DEG.	2. MIN.	3. SEC.	C. LONGITUDE 1. DEG.	2. MIN.	3. SEC.	D. RECEIVING WATER (name)
001	37	10	16	76	42	19	James River
101	37	10	7	76	42	4	Discharge Canal
102	37	10	1	76	41	50	Unit 1 Storm Drain
103	37	10	1	76	41	50	Unit 1 Storm Drain
104	37	10	1	76	41	50	Unit 1 Storm Drain
105	37	10	1	76	41	50	Discharge Canal

II. FLOWS, SOURCES OF POLLUTION, AND TREATMENT TECHNOLOGIES

A. Attach a line drawing showing the water flow through the facility. Indicate sources of intake water, operations contributing wastewater to the effluent, and treatment units labeled to correspond to the more detailed descriptions in Item B. Construct a water balance on the line drawing by showing average flows between intakes, operations, treatment units, and outfalls. If a water balance cannot be determined (e.g., for certain mining activities), provide a pictorial description of the nature and amount of any sources of water and any collection or treatment measures.

B. For each outfall, provide a description of: (1) All operations contributing wastewater to the effluent, including process wastewater, sanitary wastewater, cooling water, and storm water runoff; (2) The average flow contributed by each operation; and (3) The treatment received by the wastewater. Continue on additional sheets if necessary.

1. OUTFALL NO. (list)	2. OPERATION(S) CONTRIBUTING FLOW a. OPERATION (list)	b. AVERAGE FLOW (include units)	3. TREATMENT a. DESCRIPTION	b. LIST CODES FROM TABLE 2C-1 1-O	2-F
001	Units 1 & 2 Condenser Cooling	2003 MGD	Mixing, cooling.		
	Water (All other outfalls except		Periodic disinfection.		
	002 are internal to 001.)		Discharge to surface water.		
101	Sewage Treatment Plant	0.0103 MGD	Flow equalization, screening,	1-L	1-T
			grinding, activated sludge,	3-A	2-F
			disinfection, aerobic digestion,	5-A	5-H
			drying beds.		
102	Turbine Sump A	8044 gpd	Flotation, settling.	1-H	1-U
103	Turbine Sump B	8531 gpd	Flotation, settling.	1-H	1-U
104	Reverse Osmosis Reject &	0.0277 MGD	None.	XX	
	Backwash				
105	Oil Storage Tank Dike Stormwater	6909 gpd	None.	XX	

OFFICIAL USE ONLY (effluent guidelines sub-categories)

CONTINUE ON PAGE 2 OF 4

EPA Form 3510-2C (8-90)

Please print or type in the unshaded areas only.

EPA I.D. NUMBER (copy from Item I of Form 1)
VA0004090

Form Approved. OMB No. 2040-0086
Approval expires 5-31-92

FORM 2C NPDES

U.S. ENVIRONMENTAL PROTECTION AGENCY
APPLICATION FOR PERMIT TO DISCHARGE WASTEWATER
EXISTING MANUFACTURING, COMMERCIAL, MINING AND SILVICULTURAL OPERATIONS
Consolidated Permits Program

I. OUTFALL LOCATION

For each outfall, list the latitude and longitude of its location to the nearest 15 seconds and the name of the receiving water.

A. OUTFALL NUMBER (list)	B. LATITUDE 1. DEG.	2. MIN.	3. SEC.	C. LONGITUDE 1. DEG.	2. MIN.	3. SEC.	D. RECEIVING WATER (name)
106	37	10	1	76	41	50	Unit 2 Storm Drain
107	37	10	1	76	41	50	Unit 2 Storm Drain
108	37	10	1	76	41	50	Discharge Canal
109	37	10	1	76	41	50	Unit 2 Discharge Tunnel
110	37	10	1	76	41	50	Cooling water tunnel- Alternate routing
111	36	10	1	76	41	50	Cooling water tunnel- Alternate routing

II. FLOWS, SOURCES OF POLLUTION, AND TREATMENT TECHNOLOGIES

A. Attach a line drawing showing the water flow through the facility. Indicate sources of intake water, operations contributing wastewater to the effluent, and treatment units labeled to correspond to the more detailed descriptions in Item B. Construct a water balance on the line drawing by showing average flows between intakes, operations, treatment units, and outfalls. If a water balance cannot be determined *(e.g., for certain mining activities)*, provide a pictorial description of the nature and amount of any sources of water and any collection or treatment measures.

B. For each outfall, provide a description of: (1) All operations contributing wastewater to the effluent, including process wastewater, sanitary wastewater, cooling water, and storm water runoff; (2) The average flow contributed by each operation; and (3) The treatment received by the wastewater. Continue on additional sheets if necessary.

1. OUTFALL NO. (list)	2. OPERATION(S) CONTRIBUTING FLOW a. OPERATION (list)	b. AVERAGE FLOW (include units)	3. TREATMENT a. DESCRIPTION	b. LIST CODES FROM TABLE 2C-1 1-H	1-U
106	Turbine Sump C	8775 gpd	Settling, flotation.		
				XX	
107	Package Boiler A & B	0.0031 MGD	None.		
				1-U	3-B
108	Settling Pond	0.0245 MGD	Sedimentation, aeration.		
			Biological enhancement.		
				2-J	2-B
109	Radwaste Facility	0.0181 MGD	Ion exchange, ozonation.		
				1-U	2-K
110	Unit 1A Waste Neutralization	0.0279 MGD	Settling, neutralization.		
	Sump				
				1-U	2-K
111	Unit 1B Waste Neutralization	0.0279 MGD	Settling, neutralization.		

OFFICIAL USE ONLY *(effluent guidelines sub-categories)*

CONTINUE ON PAGE 2 OF 4

EPA Form 3510-2C (8-90)

Form Approved. OMB No. 2040-0086
Approval expires 5-31-92

EPA I.D. NUMBER (copy from Item I of Form I)
VA0004090

Please print or type in the unshaded areas only.

FORM 2C NPDES

EPA

U.S. ENVIRONMENTAL PROTECTION AGENCY
APPLICATION FOR PERMIT TO DISCHARGE WASTEWATER
EXISTING MANUFACTURING, COMMERCIAL, MINING AND SILVICULTURAL OPERATIONS
Consolidated Permits Program

I. OUTFALL LOCATION

For each outfall, list the latitude and longitude of its location to the nearest 15 seconds and the name of the receiving water.

A. OUTFALL NUMBER (list)	B. LATITUDE 1. DEG.	2. MIN.	3. SEC.	C. LONGITUDE 1. DEG.	2. MIN.	3. SEC.	D. RECEIVING WATER (name)
112	36	10	1	76	41	50	Cooling water tunnel- Alternate routing
113	36	10	1	76	41	50	Cooling water tunnel- Alternate routing
114	36	10	1	76	41	50	Cooling water tunnel
115	36	10	1	76	41	50	Cooling water tunnel
116	36	10	1	76	41	50	Cooling water tunnel
117	36	10	1	76	41	50	Cooling water tunnel

II. FLOWS, SOURCES OF POLLUTION, AND TREATMENT TECHNOLOGIES

A. Attach a line drawing showing the water flow through the facility. Indicate sources of intake water, operations contributing wastewater to the effluent, and treatment units labeled to correspond to the more detailed descriptions in Item B. Construct a water balance on the line drawing by showing average flows between intakes, operations, treatment units, and outfalls. If a water balance cannot be determined (e.g., for certain mining activities), provide a pictorial description of the nature and amount of any sources of water and any collection or treatment measures.

B. For each outfall, provide a description of: (1) All operations contributing wastewater to the effluent, including process wastewater, sanitary wastewater, cooling water, and storm water runoff; (2) The average flow contributed by each operation; and (3) The treatment received by the wastewater. Continue on additional sheets if necessary.

1. OUTFALL NO. (list)	2. OPERATION(S) CONTRIBUTING FLOW a. OPERATION (list)	b. AVERAGE FLOW (include units)	3. TREATMENT a. DESCRIPTION	b. LIST CODES FROM TABLE 2C-1	
112	Unit 2A Waste Neutralization Sum	0.0279 MGD	Settling, neutralization.	1-U	2-K
113	Unit 2B Waste Neutralization Sum	0.0279 MGD	Settling, neutralization.	1-U	2-K
114	Unit 1 Steam Generator Blowdown	0.0099 MGD	Ion exchange.	2-J	
115	Unit 2 Steam Generator Blowdown	0.0275 MGD	Ion exchange.	2-J	
116	Unit 1 Recirculation Spray Heat Exchanger	2.0265 MGD	None.	XX	
117	Unit 2 Recirculation Spray Heat Exchanger	1.8 MGD	None.	XX	

OFFICIAL USE ONLY (effluent guidelines sub-categories)

CONTINUE ON PAGE 2 OF 4

EPA Form 3510-2C (8-90)

lease print or type in the unshaded areas only.

EPA I.D. NUMBER *(copy from Item I of Form 1)*
VA0004090

Form Approved. OMB No. 2040-0086
Approval expires 5-31-92

FORM 2C NPDES

U.S. ENVIRONMENTAL PROTECTION AGENCY
APPLICATION FOR PERMIT TO DISCHARGE WASTEWATER
EXISTING MANUFACTURING, COMMERCIAL, MINING AND SILVICULTURAL OPERATIONS
Consolidated Permits Program

I. OUTFALL LOCATION

For each outfall, list the latitude and longitude of its location to the nearest 15 seconds and the name of the receiving water.

A. OUTFALL NUMBER *(list)*	B. LATITUDE			C. LONGITUDE			D. RECEIVING WATER *(name)*
	1. DEG.	2. MIN.	3. SEC.	1. DEG.	2. MIN.	3. SEC.	
118	36	10	1	76	41	50	Cooling water tunnel
119	36	10	1	76	41	50	Cooling water tunnel
120	36	10	1	76	41	50	Cooling water tunnel- Alternate routing
121	36	10	1	76	41	50	Stormwater pipe to Discharge Canal
122	36	10	1	76	41	50	Stormwater pipe to Discharge Canal
002	37	9	36	76	41	32	Unnamed tributary to Hog Island marsh

II. FLOWS, SOURCES OF POLLUTION, AND TREATMENT TECHNOLOGIES

A. Attach a line drawing showing the water flow through the facility. Indicate sources of intake water, operations contributing wastewater to the effluent, and treatment units labeled to correspond to the more detailed descriptions in Item B. Construct a water balance on the line drawing by showing average flows between intakes, operations, treatment units, and outfalls. If a water balance cannot be determined *(e.g., for certain mining activities)*, provide a pictorial description of the nature and amount of any sources of water and any collection or treatment measures.

B. For each outfall, provide a description of: (1) All operations contributing wastewater to the effluent, including process wastewater, sanitary wastewater, cooling water, and storm water runoff; (2) The average flow contributed by each operation; and (3) The treatment received by the wastewater. Continue on additional sheets if necessary.

1. OUTFALL NO. *(list)*	2. OPERATION(S) CONTRIBUTING FLOW		3. TREATMENT		
	a. OPERATION *(list)*	b. AVERAGE FLOW *(include units)*	a. DESCRIPTION	b. LIST CODES FROM TABLE 2C-1	
118	Unit 1 Condenser Hotwell Drain	0.072 MGD	Ion exchange.	2-J	
119	Unit 2 Condenser Hotwell Drain	0.09 MGD	Ion exchange.	2-K	
120	Low Conductivity Sump	0.038 MGD	Settling, neutralization.	1-U	2-K
121	Unit 1 Steam Generator Hydrolanc	0.038 MGD	None.	XX	
122	Unit 2 Steam Generator Hydrolanc	0.038 MGD	None.	XX	
002	Gas Turbine Dike Stormwater	9650 gpd	Discharge to surface water.	4-A	

OFFICIAL USE ONLY *(effluent guidelines sub-categories)*

CONTINUE ON PAGE 2 OF 4

EPA Form 3510-2C (8-90)

CONTINUED FROM PAGE 1 OF 4

EPA I.D. NUMBER (copy from Item I of Form 1) VA0004090

Except for storm runoff, leaks, or spills, are any of the discharges described in Items II-A or B intermittent or seasonal?

[X] YES (complete the following table) ☐ NO (go to Section III)

UTFALL UMBER (list)	2. OPERATION(s) CONTRIBUTING FLOW (list)	3. FREQUENCY a. DAYS PER WEEK (specify average)	3. FREQUENCY b. MONTHS PER YEAR (specify average)	4. FLOW a. FLOW RATE (in mgd) 1. LONG TERM AVERAGE	4. FLOW a. FLOW RATE (in mgd) 2. MAXIMUM DAILY	4. FLOW b. TOTAL VOLUME (specify with units) 1. LONG TERM AVERAGE	4. FLOW b. TOTAL VOLUME (specify with units) 2. MAXIMUM DAILY	4. FLOW c. DURATION (in days)
111	Unit 1B Waste Neutralization Sump	1	2	.0279MGD	.0279MGD	28K gal	28K gal	1
112	Unit 2A Waste Neutralization SumUnit	1	1	.0279MGD	.0279MGD	28K gal	28K gal	1
113	2B Waste Neutralization SumUnit 1	1	2	.0279MGD	.0279MGD	28K gal	28K gal	1
116	Recirculation Spray Heat Exchanger	1	1	2.02MGD	2.03MGD	2.02 Mgal	2.03 Mgal	1 day
117	Unit 2 Recirculation Spray Heat Exchanger	1	1	1.8MGD	2.03MGD	1.8 Mgal	2.03 Mgal	1 day
118	Unit 1 Condenser Hotwell Drain	1	4	0.072MGD	0.09MGD	72K gal	90K gal	1
119	Unit 2 Condenser Hotwell Drain	1	4	0.09MGD	0.09MGD	90k gal	90K gal	1
120	Low Conductivity Sump	1	2	0.038MGD	0.038MGD	38K gal	38K gal	1
121	Unit 1 Steam Generator HydrolancUnit	1	2	0.038MGD	0.038MGD	38K gal	38K gal	1
122	2 Steam Generator HydrolancGas	1	2	0.038MGD	0.038MGD	38K gal	38K gal	1
002	Turbine Dike Stormwater	1	3	9650gpd	0.023MGD	9650 gal	23K gal	2

III. PRODUCTION

A. Does an effluent guideline limitation promulgated by EPA under Section 304 of the Clean Water Act apply to your facility?

[X] YES (complete Item III-B) ☐ NO (go to Section IV)

B. Are the limitations in the application effluent guideline expressed in terms of production (or other measure of operation)?

☐ YES (complete Item III-C) [X] NO (go to Section IV)

C. If you answered "yes" to Item III-B, list the quantity which represents an actual measurement of your level of production, expressed in the terms and units used in the applicable effluent guideline, and indicate the affected outfalls.

1. AVERAGE DAILY PRODUCTION a. QUANTITY PER DAY	b. UNITS OF MEASURE	c. OPERATION, PRODUCT, MATERIAL, ETC. (specify)	2. AFFECTED OUTFALLS (list outfall numbers)

IV. IMPROVEMENTS

A. Are you now required by any Federal, State or local authority to meet any implementation schedule for the construction, upgrading or operation of wastewater treatment equipment or practices or any other environmental programs which may affect the discharges described in this application? This includes, but is not limited to, permit conditions, administrative or enforcement orders, enforcement compliance schedule letters, stipulations, court orders, and grant or loan conditions.

☐ YES (complete the following table) [X] NO (go to Item IV-B)

1. IDENTIFICATION OF CONDITION, AGREEMENT, ETC.	2. AFFECTED OUTFALLS a. NO.	2. AFFECTED OUTFALLS b. SOURCE OF DISCHARGE	3. BRIEF DESCRIPTION OF PROJECT	4. FINAL COMPLIANCE DATE a. REQUIRED	4. FINAL COMPLIANCE DATE b. PROJECTED

B. OPTIONAL: You may attach additional sheets describing any additional water pollution control programs (or other environmental projects which may affect your discharges) you now have underway or which you plan. Indicate whether each program is now underway or planned, and indicate your actual or planned schedules for construction.

☐ MARK "X" IF DESCRIPTION OF ADDITIONAL CONTROL PROGRAMS IS ATTACHED

CONTINUE ON PAGE 3 OF 4

CONTINUED FROM PAGE 1 OF 4

EPA I.D. NUMBER (copy from Item I of Form 1) VA0004090

C. Except for storm runoff, leaks, or spills, are any of the discharges described in Items II-A or B intermittent or seasonal?

☒ YES (complete the following table) ☐ NO (go to Section III)

1. OUTFALL NUMBER (list)	2. OPERATION(s) CONTRIBUTING FLOW (list)	3. FREQUENCY a. DAYS PER WEEK (specify average)	3. FREQUENCY b. MONTHS PER YEAR (specify average)	4. FLOW a. FLOW RATE (in mgd) 1. LONG TERM AVERAGE	4. FLOW a. FLOW RATE (in mgd) 2. MAXIMUM DAILY	4. FLOW b. TOTAL VOLUME (specify with units) 1. LONG TERM AVERAGE	4. FLOW b. TOTAL VOLUME (specify with units) 2. MAXIMUM DAILY	4. FLOW c. DURATION (in days)
102	Turbine Sump A	7	12	8044gpd	15K gpd	8K gal	15K gal	1
103	Turbine Sump B	7	12	8531gpd	23K gpd	8531 gal	23K gal	1
105	Oil Storage Tank Dike Stormwater	1	7	6909gpd	16K gpd	6909 gal	16K gal	1
106	Turbine Sump C	7	12	8775gpd	23K gpd	8775 gal	23K gal	1
107	Package Boiler A & B	1	2	.0031MGD	.0031MGD	3K gal	3.1K gal	1
109	Radwaste Facility	7	12	.0181MGD	.0181MGD	18K gal	18K gal	1
110	Unit 1A Waste Neutralization Sump	1	2	.0279MGD	.0279MGD	28K gal	28K gal	1

III. PRODUCTION

A. Does an effluent guideline limitation promulgated by EPA under Section 304 of the Clean Water Act apply to your facility?

☒ YES (complete Item III-B) ☐ NO (go to Section IV)

B. Are the limitations in the application effluent guideline expressed in terms of production (or other measure of operation)?

☐ YES (complete Item III-C) ☒ NO (go to Section IV)

C. If you answered "yes" to Item III-B, list the quantity which represents an actual measurement of your level of production, expressed in the terms and units used in the applicable effluent guideline, and indicate the affected outfalls.

1. AVERAGE DAILY PRODUCTION a. QUANTITY PER DAY	b. UNITS OF MEASURE	c. OPERATION, PRODUCT, MATERIAL, ETC. (specify)	2. AFFECTED OUTFALLS (list outfall numbers)

IV. IMPROVEMENTS

A. Are you now required by any Federal, State or local authority to meet any implementation schedule for the construction, upgrading or operation of wastewater treatment equipment or practices or any other environmental programs which may affect the discharges described in this application? This includes, but is not limited to, permit conditions, administrative or enforcement orders, enforcement compliance schedule letters, stipulations, court orders, and grant or loan conditions.

☐ YES (complete the following table) ☒ NO (go to Item IV-B)

1. IDENTIFICATION OF CONDITION, AGREEMENT, ETC.	2. AFFECTED OUTFALLS a. NO.	2. AFFECTED OUTFALLS b. SOURCE OF DISCHARGE	3. BRIEF DESCRIPTION OF PROJECT	4. FINAL COMPLIANCE DATE a. REQUIRED	4. FINAL COMPLIANCE DATE b. PROJECTED

B. OPTIONAL: You may attach additional sheets describing any additional water pollution control programs (or other environmental projects which may affect your discharges) you now have underway or which you plan. Indicate whether each program is now underway or planned, and indicate your actual or planned schedules for construction.

☐ MARK "X" IF DESCRIPTION OF ADDITIONAL CONTROL PROGRAMS IS ATTACHED

CONTINUE ON PAGE 3 OF 4

CONTINUED FROM PAGE 2 OF 4

EPA I.D. NUMBER *(copy from Item I of Form 1)*
VA0004090

V. INTAKE AND EFFLUENT CHARACTERISTICS

A, B, & C: See instructions before proceeding - Complete one set of tables for each outfall - Annotate the outfall number in the space provided. NOTE: Tables V-A, V-B, and V-C are included on separate sheets numbered V-1 through V-9.

D. Use the space below to list any of the pollutants listed in Table 2c-3 of the instructions, which you know or have reason to believe is discharged or may be discharged from any outfall. For every pollutant you list, briefly describe the reasons you believe it to be present and report any analytical data in your possession.

1. POLLUTANT	2. SOURCE	1. POLLUTANT	2. SOURCE
Dimethylamine See attachment titled "Chemical Additions" for additional information.	Low concentration additions to steam generators/secondary system Non-detectable in station discharge.		

VI. POTENTIAL DISCHARGES NOT COVERED BY ANALYSIS

Is any pollutant listed in Item V-C a substance or a component of a substance which you currently use or manufacture as an intermediate or final product or byproduct?

[X] YES *(list all such pollutants below)* [ ] NO *(go to Item VI-B)*

Ammonium hydroxide
Dimethylamine
Potassium chromate
Potassium hydroxide
Sodium nitrite

See attachment titled "Chemical Additions" for additional information.

CONTINUE ON PAGE 4 OF 4

CONTINUED FROM PAGE 3 OF 4

EPA I.D. NUMBER (copy from Item I of Form 1)
VA0004090

VII. BIOLOGICAL TOXICITY TESTING DATA

Do you have any knowledge or reason to believe that any biological test for acute or chronic toxicity has been made on any of your discharges or on a receiving water in relation to your discharge within the last 3 years?

[X] YES *(identify the test(s) and describe their purposes below)* [ ] NO *(go to Section VIII)*

Biological and chemical monitoring have been conducted in accordance with the toxics monitoring requirements of the current permit.
This information has previously been submitted to DEQ.

VIII. CONTRACT ANALYSIS INFORMATION

Were any of the analyses reported in Item V performed by a contract laboratory or consulting firm?

[X] YES *(list the name, address, and telephone number of, and pollutants analyzed by, each such laboratory or firm below)* [ ] NO *(go to Section IX)*

A. NAME	B. ADDRESS	C. TELEPHONE (area code && no.)	D. POLLUTANTS ANALYZED (list)
Florida Radio Chemistry Services, Inc.	5456 Hoffner Ave. Suite 201 Orlando, FL 32812	(407) 382-7733	Gross alpha and beta Radium 226 and 228 Total radium

IX. CERTIFICATION

I certify under penalty of law that this document and all attachments were prepared under my direction or supervision in accordance with a system designed to assure that qualified personnel properly gather and evaluate the information submitted. Based on my inquiry of the person or persons who manage the system or those persons directly responsible for gathering the information, the information submitted is, to the best of my knowledge and belief, true, accurate, and complete. I am aware that there are significant penalties for submitting false information, including the possibility of fine and imprisonment for knowing violations.

A. NAME & OFFICIAL TITLE (type or print)	B. PHONE NO. (area code & no.)
Pamela F. Faggert V.P. & Chief Environmental Officer	(804) 273-3467
C. SIGNATURE	**D. DATE SIGNED**
Pamela F. Faggert	3-21-01

CHEMICAL ADDITIONS
SURRY POWER STATION VPDES PERMIT APPLICATION

The following is a list of chemicals either currently in use or likely to be evaluated for use within the next five years at Surry Power Station. The list is subdivided into plant systems with brief comments included to give perspective.

I. Chemicals added (or potential for addition) to steam generators/secondary system:

1. hydrazine — currently added to control oxygen
2. monoethanolamine (ETA) — added at Surry to control pH
3. ammonium hydroxide — formed in the system by hydrazine decomposition (may be added to adjust pH)
4. carbohydrazide $(N_2H_3)_2CO$ — (Nalco's Eliminox) evaluating as a replacement for hydrazine
5. dimethylamine (DMA) — will be evaluated this year for future addition (pH control)
6. methoxypropylamine (MPA) — may be evaluated for use w/in 5 yrs. (pH control)
7. diaminoethane (DAE) — may be evaluated for use w/in 5 yrs. (pH control)
8. diethylaminoethanol — may be evaluated for use w/in 5 yrs. (pH control)
9. 5-aminopentanol (5AP) — may be evaluated for use w/in 5 yrs. (pH control)
10. 2-amino-2-methyl-1-propanol (AMP) — may be evaluated for use w/in 5 yrs. (pH control)
11. morpholine — used in the recent past-may be used again? (pH control)
12. diethylhydroxylamine (DEHA) — may be evaluated for use w/in 5 years (oxygen control)

II. Chemicals added to the auxiliary heating boiler (potential for blowdown to reach the environment during operation)

1. trisodium phosphate — buffer/pH control
2. sodium sulfite — oxygen scavenger
3. sodium hydroxide — pH control
4. ammonium hydroxide — (potential use-already listed above)
5. hydrazine — (potential use-already listed above)
6. carbohydrazide — (potential use-already listed above)
7. monoethanolamine (ETA) — (potential use-already listed above)

III. Chemicals added to the bearing cooling system

1. sodium nitrite	component of Calgon's LCS-60corrosion inhibitor
2. borax	component of Calgon's LCS-60 corrosion inhibitor
3. tolytriazole	component of Calgon's LCS-60 corrosion inhibitor
4. potassium hydroxide	added to adjust pH
5. gluteraldehyde	biocide (Calgon's H 300)
6. isothiazolone	(under evaluation as a biocide, Calgon's H 510)

IV. Chemicals added to the component cooling system (not expected to reach the environment-but have some slight potential to appear in discharges during events such as heat exchanger tube leaks, spills, etc.)

1. potassium hydroxide	(pH control-already listed above)
2. potassium chromate	(corrosion inhibitor-currently added)
3. potassium dichromate	(corrosion inhibitor-currently added)
4. sodium nitrite	(under evaluation as a chromate substitute-already listed above)
5. tolytriazole	(under evaluation as a chromate substitute-yellow metal corrosion inhibitor-already listed above)
6. 45% glutaraldehyde	(biocide under evaluation as a chromate substitute-see III, 5. above)
7. isothiazolone	(under evaluation as a biocide, Calgon's H 510)
8. sodium tetraborate	(under evaluation as a chromate substitute)

The above chemicals may appear in the internal discharges at very low concentrations, generally in concentrations calculated to be below detection levels. All would be well below detection levels at the final station discharge, Outfall 001.

Periodically, checks for condenser leaks may be performed using uranine yellow dye (disodium flourescein) as an indicator. Concentrations used are in a range that would be perceptible only under UV light and would not be otherwise apparent in the cooling water discharge.

Hydrazine may appear in the internal discharge at the outfall from the Settling Pond (Outfall 101) in a theoretical concentration of up to 96 ppm, based on calculations from the concentrations possibly present in the sumps that discharge to the Settling Pond. The actual concentration of hydrazine at this point will be less due to natural decomposition in an environment with mixing and oxygen availability. Hydrazine concentrations at the Outfall 001 discharge will remain below the level of detection.

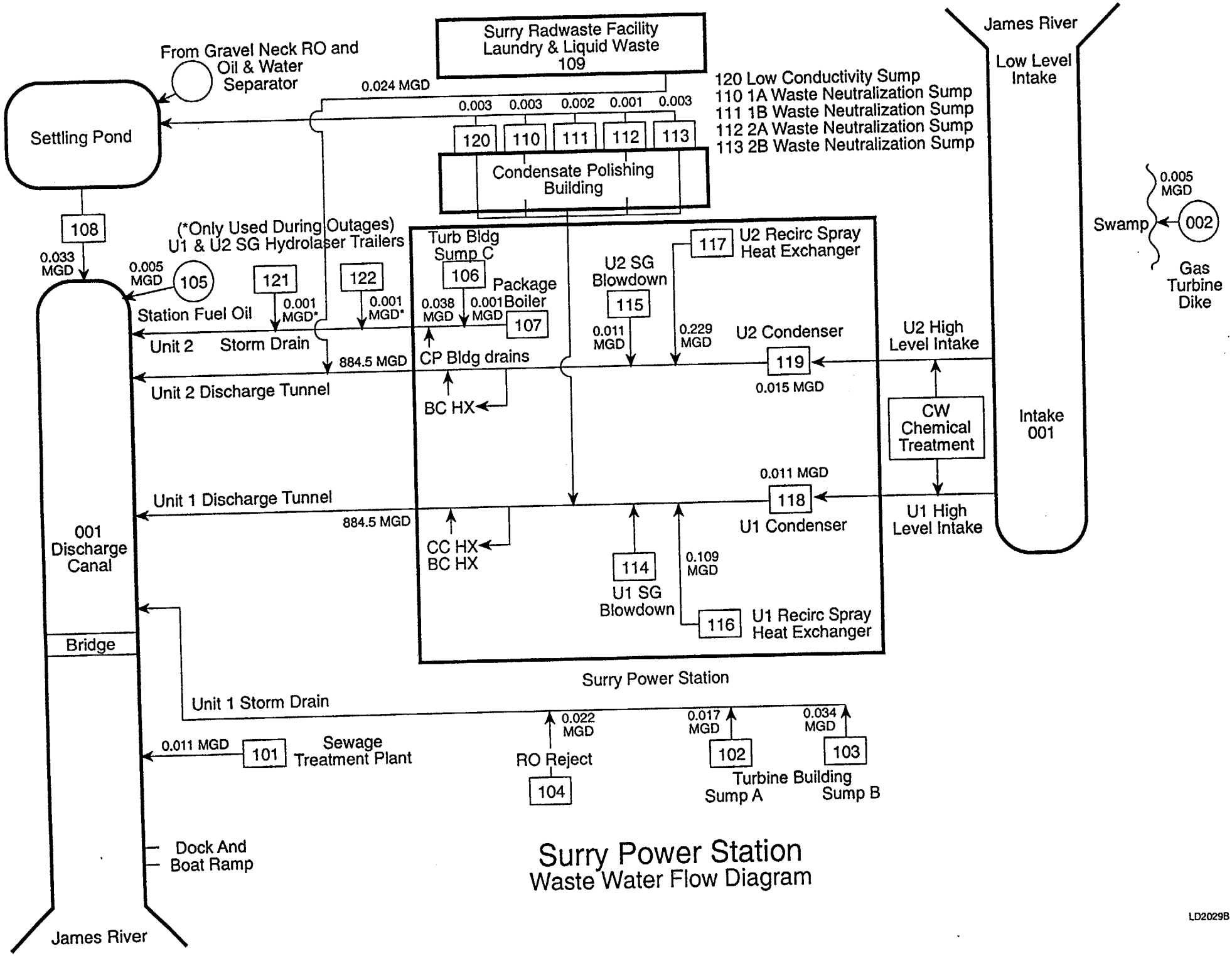

Surry Power Station
Waste Water Flow Diagram

SURRY POWER STATION-OUTFALL DESCRIPTIONS AND SAMPLING POINTS

OUTFALL	DESCRIPTION	SAMPLE POINT	
001	Circulating Cooling Water	boat ramp	
002	Gas Turbine Dike	berm (dip)	
101	Sewage Treatment Plant	final effluent	
102	Turbine Building sump A	sump (dip)	
103	Turbine Building sump B	sump (dip)	
104	RO Reject Water	grab sample prior to drain	
105	Station Oil Dike	sample from berm (dip)	
106	Turbine Building sump C	sump (dip)	
107	Package Boiler	sample tap-Pkg. B Room	
108	Settling Pond	final effluent weir	
109	Radwaste Facility	sample tap-SRF Lab	
110	1A Waste Neut. Sump	sump (dip)	
111	1B Waste Neut. Sump	sump (dip)	
112	2A Waste Neut. Sump	sump (dip)	
113	2B Waste Neut. Sump	sump (dip)	
114	U1 SG blowdown	U1 SG sample tap	
115	U2 SG blowdown	U2 SG sample tap	
116	U1 Recirc. Spray Heat Ex.	high level screen (dip)	
117	U2 Recirc. Spray Heat Ex.	high level screen (dip)	
118	U1 Condenser	U1 condensate sample tap	
119	U2 Condenser	U2 condensate sample tap	
120	Low Conductivity Sump	sump (dip)	
121	U1 SG Hydrolaser Trailer	hydrolaser trailer	
122	U2 SG Hydrolaser Trailer	hydrolaser trailer	

DEPARTMENT OF ENVIRONMENTAL QUALITY
WATER DIVISION
PERMIT APPLICATION FEE

N: 17661

INSTRUCTIONS

Applicants for individual Virginia Pollutant Discharge Elimination System (VPDES), Virginia Pollution Abatement (VPA), Virginia Water Protection (VWP), Surface Water Withdrawal (SWW), and Ground Water Withdrawal (GWW) Permits are required to pay permit application fees except farming operations engaged in production for market. Fees are also required for registration for coverage under General Permits except for the general permits for sewage treatment systems with discharges of 1,000 gallons per day (GPD) or less and for Corrective Action Plans for leaking underground storage tanks. Except for VWP permits, fees must be paid when applications for permit issuance, reissuance or modification are submitted. Applicants for VWP permits will be notified by the DEQ of the fee due. Applications will be considered incomplete if the proper fee is not paid and will not be processed until the fee is received.

The permit fee schedule can be found on the back of this form. Fees for permit issuance or reissuance and for permit modification are included. Once you have determined the fee for the type of application you are submitting, complete this form. The white and yellow copies of the form and your check or money order payable to "Commonwealth of Virginia--DEQ" should be mailed to the Department of Environmental Quality, Receipts Control, P.O. Box 10150, Richmond, VA 23240. The pink copy of the form and a copy of your check or money order should accompany the permit application. The gold copy is for your records. Please direct any questions regarding this form or fee payment to the DEQ Office to which you are submitting your application.

APPLICANT NAME: DOMINION GENERATION SSN/FIN: N/A

ADDRESS: PAMELA F. FAGGERT DAYTIME PHONE: (804) 273-3467
Area Code

5000 DOMINION BLVD.

GLEN ALLEN, VA 23060

FACILITY/ACTIVITY NAME: SURRY POWER STATION

LOCATION: SURRY CO., VA

TYPE OF PERMIT APPLIED FOR (from Fee Schedule): VPDES INDUSTRIAL WATER

TYPE OF ACTION: _____ New Issuance X Reissuance _____ Modification

AMOUNT OF FEE SUBMITTED (from Fee Schedule): $8,000.00

EXISTING PERMIT NUMBER (if applicable): VA 0004090

DEQ OFFICE TO WHICH APPLICATION SUBMITTED (check one)

- ☐ Abingdon/SWRO
- ☒ Richmond/PRO
- ☐ Bridgewater/VRO
- ☐ Richmond/Headquarters
- ☐ Kilmarnock/KO
- ☐ Roanoke/WCRO
- ☐ Prince William/NRO
- ☐ Virginia Beach/TRO

FOR DEQ USE ONLY

Date: _____

DC #: _____

White and Yellow Copies - DEQ Accounting Office
Pink Copy - DEQ Regional or Permit Program Office
Gold Copy - Applicant

Dominion

BANKERS TRUST DELAWARE WILMINGTON DE
IN COOPERATION WITH SUNTRUST BANK
RICHMOND VA

62-38 C
311

VOID

VENDOR #: 400000791
DATE: 03/19/2001
CHECK #: 195814

PAY *** EIGHT THOUSAND DOLLARS ***

AMOUNT
$ ** 8,000.00 **

PAY TO THE ORDER OF
VIRGINIA COMMONWEALTH OF
ENVIRONMENTAL QUALITY DEPT
PO BOX 10150
RICHMOND, VA 23240

CDA Number 200566821

Dominion Virginia Power, Dominion North Carolina Power, and Dominion Generation

⑈195814⑈ ⑆031100380⑆ 00566821⑈

Form No. 722057(Sep 2000)

Dominion Virginia Power, Dominion North Carolina Power, and Dominion Generation

FOR INQUIRIES PLEASE CALL:
ACCOUNTS PAYABLE 804 771-6200 RICHMOND VA 23261-6666

Vendor #: 400000791
Check #: 195814
Date: 03/19/2001
Document #: 2000012905

REFERENCE	INVOICE NO.	DATE	GROSS AMOUNT	DEDUCTIONS	NET AMOUNT
1900026763 1000	DR031501800000	03/15/2001	8,000.00	0.00	8,000.00
SURRY POWER STATION, REISSUANCE OF VPDES PERMIT					
		TOTALS	8,000.00	0.00	8,000.00

0412-0369-0311 2000, Moore North America. All rights reserved.
Pre-Sort/Seal Patents 4,988,196; 4,928,875
Security: Patents 5,018,767; 5,193,853, and other patents pending 0321

S2032A

EPA I.D. NUMBER= VA0004090

OUTFALL 001

V. INTAKE AND EFFLUENT CHARACTERISTICS (CONTINUED FROM PAGE 3 OF FORM 2C)

PART A- YOU MUST PROVIDE THE RESULTS OF AT LEAST ONE ANALYSIS FOR EVERY POLLUTANT IN THIS TABLE. COMPLETE ONE TABLE FOR EACH OUTFALL. SEE INSTRUCTIONS FOR ADDITIONAL DETAILS

POLLUTANT	2. EFFLUENT A. MAXIMUM DAILY VALUE CONCENTRATION	A. MAXIMUM DAILY VALUE MASS	B. MAXIMUM 30 DAY VALUE CONCENTRATION	B. MAXIMUM 30 DAY VALUE MASS	C. LONG TERM AVRG. VALUE CONCENTRATION	C. LONG TERM AVRG. VALUE MASS	NO. OF ANALYSES	3. UNITS CONCENTRATION	3. UNITS MASS
BIOCHEMICAL OXYGEN DEMAND	<2	<38066.50193	.	.	.	.	1	PPM	LB/DAY
CHEMICAL OXYGEN DEMAND	32	609064.03088	.	.	.	.	1	PPM	LB/DAY
TOTAL ORGANIC CARBON	8.5	161782.633203	.	.	.	.	1	PPM	LB/DAY
TOTAL SUSPENDED SOLIDS	.	.	105.2	1693862.8326	62.9364	1051564.1894	33	PPM	LB/DAY
AMMONIA,TOTAL	.	.	0.13	2474.3226	0.08	1429.851	3	PPM	LB/DAY
FLOW	.	.	2282.46	.	2002.89619	.	32	MGD	.
TEMPERATURE (SUMMER)	36	.	.	.	.	.	1	DEGREES C	.
PH	.	.	7.05 (MIN)	7.42 (MAX)	N/A	N/A	65	STD. UNITS	.

PART B.

	MARK X BELIEVED PRESENT	MARK X BELIEVED ABSENT	2. EFFLUENT A. MAXIMUM DAILY VALUE CONCENTRATION	A. MAXIMUM DAILY VALUE MASS	B. MAXIMUM 30 DAY VALUE CONCENTRATION	B. MAXIMUM 30 DAY VALUE MASS	C. LONG TERM AVRG. VALUE CONCENTRATION	C. LONG TERM AVRG. VALUE MASS	NO. OF ANALYSES	3. UNITS CONCENTRATION	3. UNITS MASS
BROMIDE,TOTAL (24959-67-6)	____	____	34.5	656647.158293	.	.	.	.	1	PPM	LB/DAY
CHLORINE, TOTAL RESIDUAL	____	__X__	NOT SAMPLED		NOT SAMPLED						
_N_=10 COLOR	____	____	60	N/A	.	.	.	.	1	NTU	.
FECAL COLIFORM	____	__X__	NOT SAMPLED		NOT SAMPLED						
FLUORIDE (16984-48-8)	____	____	0.09	1712.99258685	.	.	.	.	1	PPM	LB/DAY
NITRATE + NITRITE	____	____	0.06	1141.9950579	.	.	.	.	1	PPM	LB/DAY

CAS=. SITE=001 MONTH=8 YEAR=2000 PARAMTR=COLOR FLOW=2280.797 _FREQ_=1 SAMPLES=. MAXDAYLD=N/A MAXDAYCN=60 LTALOAD=. LTACONC=. MAX30LD=. MAX30CN=. ORDER=13 UNITSM=. UNITS=NTU INTAKEN=. INTAKEC= INTAKEMS= PAGE=V1 GROUP=POLLUTANT FIRST.SITE=0 LAST.SITE=0 FIRST.PAGE=0 LAST.PAGE=0 FIRST.GROUP=0 LAST.GROUP=0 _I_=. CHECK=656681.65829 I=. FILLIT= _ERROR_=

ITEM V-B CONTINUED
PART C.

EPA I.D. NUMBER= VA0004090 OUTFALL 001

1. POLLUTANT	MARK X BELIEVED PRESENT	MARK X BELIEVED ABSENT	2. EFFLUENT A. MAXIMUM DAILY VALUE CONCENTRATION	A. MASS	B. MAXIMUM 30 DAY VALUE CONCENTRATION	B. MASS	C. LONG TERM AVRG. VALUE CONCENTRATION	C. MASS	NO. OF ANALYSES	3. UNITS CONCENTRATION	3. UNITS MASS
NITROGEN, TOTAL ORG. AS N	___	___	<0.01	<190.33250965	.	.	.	.	1	PPM	LB/DAY
OIL & GREASE	___	___	<5	<95166.254825	.	.	.	.	1	PPM	LB/DAY
PHOSPHORUS (AS P), TOTAL (7723-14-0)	___	___	<0.01	<190.33250965	.	.	.	.	1	PPM	LB/DAY
J. RADIOACTIVITY											
ALPHA, TOTAL	___	___	22.4	.	.	.	.	.	1	PPM	LB/DAY
BETA, TOTAL	___	___	71.7	.	.	.	.	.	1	PPM	LB/DAY
RADIUM 226 , TOTAL	___	___	1.8	34259.851737	.	.	.	.	1	PPM	LB/DAY
SULFIDE (AS S)	___	___	<0.01	<190.33250965	.	.	.	.	1	PPM	LB/DAY
SURFACTANTS	___	___	<0.025	<475.83127412	.	.	.	.	1	PPM	LB/DAY
ALUMINUM,TOTAL (7429-90-5)	___	___	3.42	65093.7183003	.	.	.	.	1	PPM	LB/DAY
BARIUM,TOTAL (7440-39-3)	___	___	0.095	1808.15884168	.	.	.	.	1	PPM	LB/DAY
BORON,TOTAL (7440-42-8)	___	___	0.83	15797.598301	.	.	.	.	1	PPM	LB/DAY
COBALT,TOTAL (7440-48-4)	___	___	<0.003	<57.099752895	.	.	.	.	1	PPM	LB/DAY
IRON,TOTAL (7439-89-6)	___	___	3.41	64903.3857907	.	.	.	.	1	PPM	LB/DAY
MAGNESIUM,TOTAL (7439-95-4)	___	___	196.5	3740033.81462	.	.	.	.	1	PPM	LB/DAY
MOLYBDENUM,TOTAL (7439-98-7)	___	___	0.002	38.06650193	.	.	.	.	1	PPM	LB/DAY
MANGANESE,TOTAL (7439-96-5)	___	___	0.11	2093.65760615	.	.	.	.	1	PPM	LB/DAY
TIN,TOTAL (7440-31-5)	___	___	<0.005	<95.166254825	.	.	.	.	1	PPM	LB/DAY
TITANIUM,TOTAL (7440-32-6)	___	___	0.14	2664.6551351	.	.	.	.	1	PPM	LB/DAY

CONTINUED FROM PAGE V2

EPA I.D. NUMBER= VA0004090 OUTFALL 001

1. POLLUTANT	MARK X TESTING REQUIRED	BELIEVED PRESENT	BELIEVED ABSENT	2. EFFLUENT A. MAXIMUM DAILY VALUE CONCENTRATION	A. MASS	B. MAXIMUM 30 DAY VALUE CONCENTRATION	B. MASS	C. LONG TERM AVRG. VALUE CONCENTRATION	C. MASS	NO. OF ANALYSES	3. UNITS CONCENTRATION	MASS
METALS, CYANIDE, AND TOTAL PHENOLS												
POLLUTANT												
ANTIMONY,TOTAL (7440-36-0)	X			<0.002	<38.06650193	.	.	.	.	1	PPM	LB/DAY
ARSENIC,TOTAL (7440-38-2)	X			.	.	<0.003	<57.0998	<0.003	<52.0553	3	PPM	LB/DAY
BERYLLIUM,TOTAL (7440-41-7)	X			0.0002	3.806650193	.	.	.	.	1	PPM	LB/DAY
CADMIUM,TOTAL (7440-43-9)	X			.	.	<0.0003	<5.71	<0.0003	<5.2055	3	PPM	LB/DAY
CHROMIUM,TOTAL (7440-47-3)	X			.	.	<0.003	<49.6314	<0.0017	<28.381	3	PPM	LB/DAY
COPPER,TOTAL (7440-50-8)	X			.	.	<0.011	<151.5982	<0.0057	<89.4811	6	PPM	LB/DAY
LEAD,TOTAL (7439-92-1)	X			.	.	0.004	66.1752	0.0027	46.5844	3	PPM	LB/DAY
MERCURY,TOTAL (7439-97-6)	X			.	.	<0.0002	<3.8067	<0.0002	<3.4704	3	PPM	LB/DAY
NICKEL,TOTAL (7440-02-0)	X			.	.	<0.005	<95.1663	<0.005	<86.7589	3	PPM	LB/DAY
SELENIUM,TOTAL (7782-49-2)	X			.	.	<0.003	<57.0998	<0.003	<52.0553	3	PPM	LB/DAY
SILVER,TOTAL (7440-22-4)	X			.	.	<0.0001	<1.9033	<0.0001	<1.7352	3	PPM	LB/DAY
THALLIUM,TOTAL (7440-28-0)	X			<0.002	<38.06650193	.	.	.	.	1	PPM	LB/DAY
ZINC,TOTAL (7440-66-6)	X			.	.	0.03	570.9975	0.0237	416.0816	3	PPM	LB/DAY
CYANIDE , TOTAL (0057-12-5)	X			.	.	<0.01	<165.438	<0.01	<162.9025	3	PPM	LB/DAY
PHENOLS , TOTAL	X			0.03	570.99752895	.	.	.	.	1	PPM	LB/DAY

:ONTINUED FROM PAGE V3

EPA I.D. NUMBER= VA0004090 OUTFALL 001

	MARK X TESTING REQUIRED	BELIEVED PRESENT	BELIEVED ABSENT	2. EFFLUENT A. MAXIMUM DAILY VALUE CONCENTRATION	A. MAXIMUM DAILY VALUE MASS	B. MAXIMUM 30 DAY VALUE CONCENTRATION	B. MAXIMUM 30 DAY VALUE MASS	C. LONG TERM AVRG. VALUE CONCENTRATION	C. LONG TERM AVRG. VALUE MASS	NO. OF ANALYSES	3. UNITS CONCENTRATION	3. UNITS MASS
:CHS FRACTION - VOLATILE COMPOUNDS												
ACROLEIN (0107-02-8)	X		X	.	.	<0.0408	<674.9872	<0.0408	<673.6501	6	PPM	LB/DAY
ACRYLONITRILE (0107-13-1)	X		X	.	.	<0.0015	<24.8157	<0.0015	<24.7665	6	PPM	LB/DAY
BENZENE (0071-43-2)	X		X	.	.	<0.0044	<72.7927	<0.0044	<72.6485	6	PPM	LB/DAY
BIS (CHLOROMETHYL) ETHER (542-88-1)				NOT SAMPLED		NOT SAMPLED		NOT SAMPLED				
BROMOFORM (0075-25-2)	X		X	.	.	<0.0047	<77.7559	<0.0047	<77.6018	6	PPM	LB/DAY
CARBON TETRACHLORIDE (0056-23-5)	X		X	.	.	<0.0028	<46.3227	<0.0028	<46.2309	6	PPM	LB/DAY
CHLOROBENZENE (0108-90-7)	X		X	.	.	<0.006	<99.2628	<0.006	<99.0662	6	PPM	LB/DAY
DIBROMOCHLOROMETHANE (0124-48-1)	X		X	.	.	<0.0031	<51.2858	<0.0031	<51.1842	6	PPM	LB/DAY
CHLOROETHANE (0075-00-3)	X		X	.	.	<0.0011	<18.1982	<0.0011	<18.1621	6	PPM	LB/DAY
2-CHLOROETHYLVINYL ETHER (0110-75-8)	X		X	.	.	<0.0012	<19.8526	<0.0012	<19.8132	6	PPM	LB/DAY
CHLOROFORM (0067-66-3)	X		X	.	.	<0.0016	<26.4701	<0.0016	<26.4176	6	PPM	LB/DAY
BROMODICHLOROMETHANE (0075-27-4)	X		X	.	.	<0.0022	<36.3964	<0.0022	<36.3243	6	PPM	LB/DAY
1,1-DICHLOROETHANE (0075-34-3)	X		X	.	.	<0.0047	<77.7559	<0.0047	<77.6018	6	PPM	LB/DAY
1,2-DICHLOROETHANE (0107-06-2)	X		X	.	.	<0.0028	<46.3227	<0.0028	<46.2309	6	PPM	LB/DAY
1,1-DICHLOROETHENE (0075-35-4)	X		X	.	.	<0.0028	<46.3227	<0.0028	<46.2309	6	PPM	LB/DAY
1,2-DICHLOROPROPANE (0078-87-5)	X		X	.	.	<0.006	<99.2628	<0.006	<99.0662	6	PPM	LB/DAY
TRANS-1,3-DICHLOROPROPENE (10061026)	X		X	.	.	<0.0009	<14.8894	<0.0009	<14.8599	6	PPM	LB/DAY
ETHYL BENZENE (0100-41-4)	X		X	.	.	<0.0072	<119.1154	<0.0072	<118.8794	6	PPM	LB/DAY
BROMOMETHANE (0074-83-9)	X		X	.	.	<0.0014	<23.1613	<0.0014	<23.1154	6	PPM	LB/DAY
CHLOROMETHANE (0074-87-3)	X		X	.	.	<0.0011	<18.1982	<0.0011	<18.1621	6	PPM	LB/DAY

CONTINUED FROM PAGE V4

EPA I.D. NUMBER= VA0004090 OUTFALL 001

	MARK X TESTING REQUIRED	BELIEVED PRESENT	BELIEVED ABSENT	2. EFFLUENT A. MAXIMUM DAILY VALUE CONCENTRATION	A. MAXIMUM DAILY VALUE MASS	B. MAXIMUM 30 DAY VALUE CONCENTRATION	B. MAXIMUM 30 DAY VALUE MASS	C. LONG TERM AVRG. VALUE CONCENTRATION	C. LONG TERM AVRG. VALUE MASS	NO. OF ANALYSES	3. UNITS CONCENTRATION	3. UNITS MASS
GCMS FRACTION - VOLATILE COMPOUNDS (CONT												
METHYLENE CHLORIDE (0075-09-2)	X		X	.	.	<0.0028	<46.3227	<0.0028	<46.2309	6	PPM	LB/DAY
1,1,2,2-TETRACHLOROETHANE (0079-34-5)	X		X	.	.	<0.0069	<114.1522	<0.0069	<113.9261	6	PPM	LB/DAY
TETRACHLOROETHENE (0127-18-4)	X		X	.	.	<0.0041	<67.8296	<0.0041	<67.6952	6	PPM	LB/DAY
TOLUENE (0108-88-3)	X		X	.	.	<0.006	<99.2628	<0.006	<99.0662	6	PPM	LB/DAY
1 2-TRANS-DICHLOROETHYLENE (0156-60-5)	X		X	.	.	<0.0016	<26.4701	<0.0016	<26.4176	6	PPM	LB/DAY
1,1,1-TRICHLOROETHANE (0071-55-6)	X		X	.	.	<0.0038	<62.8665	<0.0038	<62.7419	6	PPM	LB/DAY
1,1,2-TRICHLOROETHANE (0079-00-5)	X		X	.	.	<0.005	<82.719	<0.005	<82.5552	6	PPM	LB/DAY
TRICHLOROETHENE (0079-01-6)	X		X	.	.	<0.0019	<31.4332	<0.0019	<31.371	6	PPM	LB/DAY
TRICHLOROFLUOROMETHANE (75-69-4)				NOT SAMPLED		NOT SAMPLED		NOT SAMPLED				
VINYL CHLORIDE (0075-01-4)	X		X	.	.	<0.0018	<29.7788	<0.0018	<29.7199	6	PPM	LB/DAY
GCMS FRACTION - ACID COMPOUNDS												
2-CHLOROPHENOL (0095-57-8)	X		X	.	.	<0.0033	<54.5946	<0.0033	<54.4864	6	PPM	LB/DAY
2,4-DICHLOROPHENOL (0120-83-2)	X		X	.	.	<0.0056	<92.6453	<0.0056	<92.4618	6	PPM	LB/DAY
2,4-DIMETHYLPHENOL (0105-67-9)	X		X	.	.	<0.0052	<86.0278	<0.0052	<85.8574	6	PPM	LB/DAY
4,6-DINITRO-2-METHYLPHENOL (0534-52-1)	X		X	.	.	<0.024	<397.0513	<0.024	<396.2647	6	PPM	LB/DAY
2,4-DINITROPHENOL (0051-28-5)	X		X	.	.	<0.042	<694.8398	<0.042	<693.4633	6	PPM	LB/DAY
2-NITROPHENOL (0088-75-5)	X		X	.	.	<0.0036	<59.5577	<0.0036	<59.4397	6	PPM	LB/DAY
4-NITROPHENOL (0100-02-7)	X		X	.	.	<0.0024	<39.7051	<0.0024	<39.6265	6	PPM	LB/DAY
4-CHLORO-3-METHYLPHENOL (0059-50-7)	X		X	.	.	<0.0075	<124.0785	<0.0075	<123.8327	6	PPM	LB/DAY
PENTACHLOROPHENOL (0087-86-5)	X		X	.	.	<0.0036	<59.5577	<0.0036	<59.4397	6	PPM	LB/DAY
PHENOL (0108-95-2)	X		X	.	.	<0.0027	<44.6683	<0.0027	<44.5798	6	PPM	LB/DAY
2,4,6-TRICHLOROPHENOL (0088-06-2)	X		X	.	.	<0.0027	<44.6683	<0.0027	<44.5798	6	PPM	LB/DAY

CONTINUED FROM PAGE V5

EPA I.D. NUMBER= VA0004090 OUTFALL 001

	MARK X TESTING REQUIRED	BELIEVED PRESENT	BELIEVED ABSENT	2. EFFLUENT A. MAXIMUM DAILY VALUE CONCENTRATION	A. MASS	B. MAXIMUM 30 DAY VALUE CONCENTRATION	B. MASS	C. LONG TERM AVRG. VALUE CONCENTRATION	C. MASS	NO. OF ANALYSES	3. UNITS CONCENTRATION	MASS
GCMS FRACTION - BASE/NEUTRAL COMPOUNDS												
ACENAPHTHENE (0083-32-9)	X		X	.	.	<0.003	<49.6314	<0.003	<49.5331	6	PPM	LB/DAY
ACENAPHTHYLENE (0208-96-8)	X		X	.	.	<0.0035	<57.9033	<0.0035	<57.7886	6	PPM	LB/DAY
ANTHRACENE (0120-12-7)	X		X	.	.	<0.0019	<31.4332	<0.0019	<31.371	6	PPM	LB/DAY
BENZIDINE (0092-87-5)	X		X	.	.	<0.063	<1042.2596	<0.063	<1040.195	6	PPM	LB/DAY
BENZO(A)ANTHRACENE (0056-55-3)	X		X	.	.	<0.0165	<272.9728	<0.0165	<272.432	6	PPM	LB/DAY
BENZO(A)PYRENE (0050-32-8)	X		X	.	.	<0.0025	<41.3595	<0.0025	<41.2776	6	PPM	LB/DAY
BENZO(B)FLUORANTHENE (0205-99-2)	X		X	.	.	<0.0048	<79.4103	<0.0048	<79.2529	6	PPM	LB/DAY
BENZO(G H I)PERYLENE (0191-24-2)	X		X	.	.	<0.0041	<67.8296	<0.0041	<67.6952	6	PPM	LB/DAY
BENZO(K)FLUORANTHENE (0207-08-9)	X		X	.	.	<0.0025	<41.3595	<0.0025	<41.2776	6	PPM	LB/DAY
BIS(2-CHLOROETHOXY)METHANE (0111-91-1)	X		X	.	.	<0.0053	<87.6822	<0.0053	<87.5085	6	PPM	LB/DAY
BIS(-2-CHLOROETHYL)ETHER (0111-44-4)	X		X	.	.	<0.0057	<94.2997	<0.0057	<94.1129	6	PPM	LB/DAY
BIS(2-CHLOROISOPROPYL)ETHER (102-60-1)				NOT SAMPLED		NOT SAMPLED		NOT SAMPLED				
BIS(2-ETHYLHEXYL)PHTHALATE (0117-81-7)	X		X	.	.	<0.0025	<41.3595	<0.0025	<41.2776	6	PPM	LB/DAY
4-BROMOPHENYL-PHENYLETHER (0101-55-3)	X		X	.	.	<0.003	<49.6314	<0.003	<49.5331	6	PPM	LB/DAY
BUTYLBENZYLPHTHALATE (0085-68-7)	X		X	.	.	<0.0025	<41.3595	<0.0025	<41.2776	6	PPM	LB/DAY
2-CHLORONAPTHALENE (0091-58-7)	X		X	.	.	<0.0046	<76.1015	<0.0046	<75.9507	6	PPM	LB/DAY
4-CHLOROPHENYL-PHENYLETHER (7005-72-3)	X		X	.	.	<0.0042	<69.484	<0.0042	<69.3463	6	PPM	LB/DAY
CHRYSENE (0218-01-9)	X		X	.	.	<0.0025	<41.3595	<0.0025	<41.2776	6	PPM	LB/DAY
DIBENZO(A H)ANTHRANCENE (0053-70-3)	X		X	.	.	<0.0025	<41.3595	<0.0025	<41.2776	6	PPM	LB/DAY
1,2-DICHLOROBENZENE (0095-50-1)	X		X	.	.	<0.004	<66.1752	<0.004	<66.0441	6	PPM	LB/DAY
1,3-DICHLOROBENZENE (0541-73-1)	X		X	.	.	<0.0031	<51.2858	<0.0031	<51.1842	6	PPM	LB/DAY

CONTINUED FROM PAGE V6

EPA I.D. NUMBER= VA0004090 OUTFALL 001

	MARK X TESTING REQUIRED	BELIEVED PRESENT	BELIEVED ABSENT	2. EFFLUENT A. MAXIMUM DAILY VALUE CONCENTRATION	A. MASS	B. MAXIMUM 30 DAY VALUE CONCENTRATION	B. MASS	C. LONG TERM AVRG. VALUE CONCENTRATION	C. MASS	NO. OF ANALYSES	3. UNITS CONCENTRATION	MASS
GCMS FRACTION - BASE/NEUTRAL COMP.(CONT)												
1,4-DICHLOROBENZENE (0106-46-7)	X		X	.	.	<0.0044	<72.7927	<0.0044	<72.6485	6	PPM	LB/DAY
3,3PR-DICHLOROBENZIDINE (0091-94-1)	X		X	.	.	<0.0078	<129.0417	<0.0078	<128.786	6	PPM	LB/DAY
DIETHYLPHTHALATE (0084-66-2)	X		X	.	.	<0.0074	<122.4241	<0.0074	<122.1816	6	PPM	LB/DAY
DIMETHYL PHTHALATE (0131-11-3)	X		X	.	.	<0.0075	<124.0785	<0.0075	<123.8327	6	PPM	LB/DAY
DI-N-BUTYLPHTHALATE (0084-74-2)	X		X	.	.	<0.0064	<105.8803	<0.0064	<105.6706	6	PPM	LB/DAY
2,4-DINITROTOLUENE (0121-14-2)	X		X	.	.	<0.0057	<94.2997	<0.0057	<94.1129	6	PPM	LB/DAY
2,6-DINITROTOLUENE (0606-20-2)	X		X	.	.	<0.0034	<56.2489	<0.0034	<56.1375	6	PPM	LB/DAY
DI-N-OCTYLPHTHALATE (0117-84-0)	X		X	.	.	<0.0025	<41.3595	<0.0025	<41.2776	6	PPM	LB/DAY
1,2-DIPHENYLHYDRAZINE (0122-66-7)	X		X	.	.	<0.0088	<145.5855	<0.0088	<145.2971	6	PPM	LB/DAY
FLUORANTHENE (0206-44-0)	X		X	.	.	<0.0022	<36.3964	<0.0022	<36.3243	6	PPM	LB/DAY
FLUORENE (0086-73-7)	X		X	.	.	<0.0022	<36.3964	<0.0022	<36.3243	6	PPM	LB/DAY
HEXACHLOROBENZENE (0118-74-1)	X		X	.	.	<0.0031	<51.2858	<0.0031	<51.1842	6	PPM	LB/DAY
HEXACHLOROBUTADIENE (0087-68-3)	X		X	.	.	<0.0018	<29.7788	<0.0018	<29.7199	6	PPM	LB/DAY
HEXACHLOROCYCLOPENTADIENE (0077-47-4)	X		X	.	.	<0.02	<330.8761	<0.02	<330.2206	6	PPM	LB/DAY
HEXACHLOROETHANE (0067-72-1)	X		X	.	.	<0.0024	<39.7051	<0.0024	<39.6265	6	PPM	LB/DAY
INDENO(1,2,3-CD)PYRENE (0193-39-5)	X		X	.	.	<0.0037	<61.2121	<0.0037	<61.0908	6	PPM	LB/DAY
ISOPHORONE (0078-59-1)	X		X	.	.	<0.0051	<84.3734	<0.0051	<84.2063	6	PPM	LB/DAY
NAPHTHALENE (0091-20-3)	X		X	.	.	<0.0038	<62.8665	<0.0038	<62.7419	6	PPM	LB/DAY
NITROBENZENE (0098-95-3)	X		X	.	.	<0.0042	<69.484	<0.0042	<69.3463	6	PPM	LB/DAY
N,NITROSODIMETHYLAMINE (0062-75-9)	X		X	.	.	<0.0062	<102.5716	<0.0062	<102.3684	6	PPM	LB/DAY
N-NITROSO-DI-N-PROPYLAMINE (0621-64-7)	X		X	.	.	<0.0036	<59.5577	<0.0036	<59.4397	6	PPM	LB/DAY

CONTINUED FROM PAGE V7

EPA I.D. NUMBER= VA0004090 OUTFALL 001

	MARK X TESTING REQUIRED	BELIEVED PRESENT	BELIEVED ABSENT	2. EFFLUENT A. MAXIMUM DAILY VALUE CONCENTRATION	A. MASS	B. MAXIMUM 30 DAY VALUE CONCENTRATION	B. MASS	C. LONG TERM AVRG. VALUE CONCENTRATION	C. MASS	NO. OF ANALYSES	3. UNITS CONCENTRATION	MASS
GCMS FRACTION - BASE/NEUTRAL COMP (CONT)												
N-NITROSODIPHENYLAMINE (0086-30-6)	X		X	.	.	<0.0027	<44.6683	<0.0027	<44.5798	6	PPM	LB/DAY
PHENANTHRENE (0085-01-8)	X		X	.	.	<0.0054	<89.3365	<0.0054	<89.1596	6	PPM	LB/DAY
PYRENE (0129-00-0)	X		X	.	.	<0.0038	<62.8665	<0.0038	<62.7419	6	PPM	LB/DAY
1,2,4-TRICHLORBENZENE (0120-82-1)	X		X	.	.	<0.0079	<130.6961	<0.0079	<130.4371	6	PPM	LB/DAY

CONTINUED FROM PAGE V8

EPA I.D. NUMBER= VA0004090 OUTFALL 001

	MARK X TESTING REQUIRED	BELIEVED PRESENT	BELIEVED ABSENT	2. EFFLUENT A. MAXIMUM DAILY VALUE CONCENTRATION	A. MASS	B. MAXIMUM 30 DAY VALUE CONCENTRATION	B. MASS	C. LONG TERM AVRG. VALUE CONCENTRATION	C. MASS	NO. OF ANALYSES	3. UNITS CONCENTRATION	MASS
GCMS FRACTION - PESTICIDES (CONTINUED)												
PCB 1242 (53469219)	____	____	__X__	.	.	<0.05	<827.1902	<0.05	<825.5516	6	PPM	LB/DAY
PCB 1254 (11097691)	____	____	__X__	.	.	<0.036	<595.5769	<0.036	<594.3971	6	PPM	LB/DAY
PCB 1221 (11104282)	____	____	__X__	.	.	<0.03	<496.3141	<0.03	<495.3309	6	PPM	LB/DAY
PCB 1232 (11141165)	____	____	__X__	.	.	<0.05	<827.1902	<0.05	<825.5516	6	PPM	LB/DAY
PCB 1248 (12672296)	____	____	__X__	.	.	<0.05	<827.1902	<0.05	<825.5516	6	PPM	LB/DAY
PCB 1260 (11096825)	____	____	__X__	.	.	<0.05	<827.1902	<0.05	<825.5516	6	PPM	LB/DAY
PCB 1016 (12674112)	____	____	__X__	.	.	<0.05	<827.1902	<0.05	<825.5516	6	PPM	LB/DAY

EPA I.D. NUMBER= VA0004090 OUTFALL 002

V. INTAKE AND EFFLUENT CHARACTERISTICS (CONTINUED FROM PAGE 3 OF FORM 2C)

PART A- YOU MUST PROVIDE THE RESULTS OF AT LEAST ONE ANALYSIS FOR EVERY POLLUTANT IN THIS TABLE. COMPLETE ONE TABLE FOR EACH OUTFALL. SEE INSTRUCTIONS FOR ADDITIONAL DETAILS

POLLUTANT	2. EFFLUENT A. MAXIMUM DAILY VALUE CONCENTRATION	A. MAXIMUM DAILY VALUE MASS	B. MAXIMUM 30 DAY VALUE CONCENTRATION	B. MAXIMUM 30 DAY VALUE MASS	C. LONG TERM AVRG. VALUE CONCENTRATION	C. LONG TERM AVRG. VALUE MASS	NO. OF ANALYSES	3. UNITS CONCENTRATION	3. UNITS MASS
BIOCHEMICAL OXYGEN DEMAND	2.98	0.48741476	.	.	.	.	1	PPM	LB/DAY
CHEMICAL OXYGEN DEMAND	26	4.252612	.	.	.	.	1	PPM	LB/DAY
TOTAL ORGANIC CARBON	14.9	2.4370738	.	.	.	.	1	PPM	LB/DAY
TOTAL SUSPENDED SOLIDS	.	.	<12.6	<1.9955	<7.863	<0.6472	27	PPM	LB/DAY
AMMONIA,TOTAL	0.07	0.01144934	.	.	.	.	1	PPM	LB/DAY
FLOW	.	.	0.0229	.	0.00965	.	26	MGD	.
TEMPERATURE (SUMMER)	29	.	.	.	.	.	1	DEGREES C	.
PH	.	.	6.02 (MIN)	6.26 (MAX)	N/A	N/A	27	STD. UNITS	.

PART B.

	MARK X BELIEVED PRESENT	MARK X BELIEVED ABSENT	2. EFFLUENT A. MAXIMUM DAILY VALUE CONCENTRATION	A. MAXIMUM DAILY VALUE MASS	B. MAXIMUM 30 DAY VALUE CONCENTRATION	B. MAXIMUM 30 DAY VALUE MASS	C. LONG TERM AVRG. VALUE CONCENTRATION	C. LONG TERM AVRG. VALUE MASS	NO. OF ANALYSES	3. UNITS CONCENTRATION	3. UNITS MASS
BROMIDE,TOTAL (24959-67-6)	____	____	<0.2	<0.0327124	.	.	.	.	1	PPM	LB/DAY
CHLORINE, TOTAL RESIDUAL	____	__X__	NOT SAMPLED		NOT SAMPLED						
COLOR	____	____	60	N/A	.	.	.	.	1	NTU	.
FECAL COLIFORM	____	__X__	NOT SAMPLED		NOT SAMPLED						
FLUORIDE (16984-48-8)	____	____	0.058	0.009486596	.	.	.	.	1	PPM	LB/DAY
NITRATE + NITRITE	____	____	<0.01	<0.00163562	.	.	.	.	1	PPM	LB/DAY

CAS=. SITE=002 MONTH=8 YEAR=2000 PARAMTR=COLOR FLOW=0.0196 _FREQ_=1 SAMPLES=. MAXDAYLD=N/A MAXDAYCN=60 LTALOAD=. LTACONC=. MAX30LD=. MAX30CN=. ORDER=13 UNITSH=. UNITS=NTU INTAKEN INTAKEC= INTAKEMS= PAGE=V1 GROUP=POLLUTANT FIRST.SITE=0 LAST.SITE=0 FIRST.PAGE=0 LAST.PAGE=0 FIRST.GROUP=0 LAST.GROUP=0 _I_=. CHECK=0.2327124 I=. FILLIT= _ERROR_=0 _N_=146

ITEM V-B CONTINUED
PART C.

EPA I.D. NUMBER= VA0004090 OUTFALL 002

1. POLLUTANT	MARK X BELIEVED PRESENT	MARK X BELIEVED ABSENT	2. EFFLUENT A. MAXIMUM DAILY VALUE CONCENTRATION	A. MAXIMUM DAILY VALUE MASS	B. MAXIMUM 30 DAY VALUE CONCENTRATION	B. MAXIMUM 30 DAY VALUE MASS	C. LONG TERM AVRG. VALUE CONCENTRATION	C. LONG TERM AVRG. VALUE MASS	NO. OF ANALYSES	3. UNITS CONCENTRATION	3. UNITS MASS
POLLUTANT									1	PPM	LB/DAY
NITROGEN, TOTAL ORG. AS N	___	___	0.5	0.081781	.	.	.	.	27	PPM	LB/DAY
OIL & GREASE	___	___	.	.	<5	<0.9555	<5	<0.418	1	PPM	LB/DAY
PHOSPHORUS (AS P), TOTAL (7723-14-0)	___	___	0.03	0.00490686	.	.	.	.			
J. RADIOACTIVITY									1	PPM	LB/DAY
ALPHA, TOTAL	___	___	0.5	.	.	.	.	.	1	PPM	LB/DAY
BETA, TOTAL	___	___	3.4	.	.	.	.	.	1	PPM	LB/DAY
SULFATE (AS SO4)	___	___	4.03	0.65915486	.	.	.	.	1	PPM	LB/DAY
SULFIDE (AS S)	___	___	0.01	0.00163562	.	.	.	.	1	PPM	LB/DAY
SURFACTANTS	___	___	0.048	0.007850976	.	.	.	.	1	PPM	LB/DAY
ALUMINUM,TOTAL (7429-90-5)	___	___	0.84	0.13739208	.	.	.	.	1	PPM	LB/DAY
BARIUM,TOTAL (7440-39-3)	___	___	0.027	0.004416174	.	.	.	.	1	PPM	LB/DAY
BORON,TOTAL (7440-42-8)	___	___	<0.02	<0.00327124	.	.	.	.	1	PPM	LB/DAY
COBALT,TOTAL (7440-48-4)	___	___	<0.003	<0.000490686	.	.	.	.	1	PPM	LB/DAY
IRON,TOTAL (7439-89-6)	___	___	2.11	0.34511582	.	.	.	.	1	PPM	LB/DAY
MAGNESIUM,TOTAL (7439-95-4)	___	___	0.5	0.081781	.	.	.	.	1	PPM	LB/DAY
MOLYBDENUM,TOTAL (7439-98-7)	___	___	<0.001	<0.000163562	.	.	.	.	1	PPM	LB/DAY
MANGANESE,TOTAL (7439-96-5)	___	___	0.03	0.00490686	.	.	.	.	1	PPM	LB/DAY
TIN,TOTAL (7440-31-5)	___	___	<0.005	<0.00081781	.	.	.	.	1	PPM	LB/DAY
TITANIUM,TOTAL (7440-32-6)	___	___	<0.01	<0.00163562	.	.	.	.			

CONTINUED FROM PAGE V2

EPA I.D. NUMBER= VA0004090 OUTFALL 002

1. POLLUTANT	MARK X TESTING REQUIRED	BELIEVED PRESENT	BELIEVED ABSENT	2. EFFLUENT A. MAXIMUM DAILY VALUE CONCENTRATION	A. MASS	B. MAXIMUM 30 DAY VALUE CONCENTRATION	B. MASS	C. LONG TERM AVRG. VALUE CONCENTRATION	C. MASS	NO. OF ANALYSES	3. UNITS CONCENTRATION	MASS
METALS, CYANIDE, AND TOTAL PHENOLS												
POLLUTANT												
ANTIMONY,TOTAL (7440-36-0)	X			<0.002	<0.000327124	.	.	.	.	1	PPM	LB/DAY
ARSENIC,TOTAL (7440-38-2)	X			0.04	0.00654248	.	.	.	.	1	PPM	LB/DAY
BERYLLIUM,TOTAL (7440-41-7)	X			<0.0002	<0.0000327124	.	.	.	.	1	PPM	LB/DAY
CADMIUM,TOTAL (7440-43-9)	X			<0.0003	<0.0000490686	.	.	.	.	1	PPM	LB/DAY
CHROMIUM,TOTAL (7440-47-3)	X			0.006	0.000981372	.	.	.	.	1	PPM	LB/DAY
COPPER,TOTAL (7440-50-8)	X			0.006	0.000981372	.	.	.	.	1	PPM	LB/DAY
LEAD,TOTAL (7439-92-1)	X			0.007	0.001144934	.	.	.	.	1	PPM	LB/DAY
MERCURY,TOTAL (7439-97-6)	X			<0.0002	<0.0000327124	.	.	.	.	1	PPM	LB/DAY
NICKEL,TOTAL (7440-02-0)	X			0.02	0.00327124	.	.	.	.	1	PPM	LB/DAY
SELENIUM,TOTAL (7782-49-2)	X			<0.003	<0.000490686	.	.	.	.	1	PPM	LB/DAY
SILVER,TOTAL (7440-22-4)	X			<0.0001	<0.0000163562	.	.	.	.	1	PPM	LB/DAY
THALLIUM,TOTAL (7440-28-0)	X			<0.002	<0.000327124	.	.	.	.	1	PPM	LB/DAY
ZINC,TOTAL (7440-66-6)	X			0.054	0.008832348	.	.	.	.	1	PPM	LB/DAY
CYANIDE , TOTAL (0057-12-5)	X			<0.01	<0.00163562	.	.	.	.	1	PPM	LB/DAY
PHENOLS , TOTAL	X			0.21	0.03434802	.	.	.	.	1	PPM	LB/DAY

CONTINUED FROM PAGE V3

EPA I.D. NUMBER= VA0004090 OUTFALL 002

	MARK X TESTING REQUIRED	BELIEVED PRESENT	BELIEVED ABSENT	2. EFFLUENT A. MAXIMUM DAILY VALUE CONCENTRATION	A. MAXIMUM DAILY VALUE MASS	B. MAXIMUM 30 DAY VALUE CONCENTRATION	B. MAXIMUM 30 DAY VALUE MASS	C. LONG TERM AVRG. VALUE CONCENTRATION	C. LONG TERM AVRG. VALUE MASS	NO. OF ANALYSES	3. UNITS CONCENTRATION	3. UNITS MASS
GCMS FRACTION - VOLATILE COMPOUNDS												
67663 (0067-66-3)	_X_	____	_X_	4.26	0.69677412	.	.	.	.	1	PPM	LB/DAY

EPA I.D. NUMBER= VA0004090 OUTFALL 101

V. INTAKE AND EFFLUENT CHARACTERISTICS (CONTINUED FROM PAGE 3 OF FORM 2C)

PART A- YOU MUST PROVIDE THE RESULTS OF AT LEAST ONE ANALYSIS FOR EVERY POLLUTANT IN THIS TABLE. COMPLETE ONE TABLE FOR EACH OUTFALL. SEE INSTRUCTIONS FOR ADDITIONAL DETAILS

POLLUTANT	2. EFFLUENT A. MAXIMUM DAILY VALUE CONCENTRATION	A. MASS	B. MAXIMUM 30 DAY VALUE CONCENTRATION	B. MASS	C. LONG TERM AVRG. VALUE CONCENTRATION	C. MASS	NO. OF ANALYSES	3. UNITS CONCENTRATION	MASS
CHEMICAL OXYGEN DEMAND	.	.	26	3.081	26	3.081	4	PPM	LB/DAY
TOTAL ORGANIC CARBON	.	.	17.675	2.0945	17.675	2.0945	4	PPM	LB/DAY
TOTAL SUSPENDED SOLIDS	.	.	10	1.185	2.7031	0.2429	32	PPM	LB/DAY
AMMONIA,TOTAL	.	.	0.12	0.0142	0.12	0.0142	4	PPM	LB/DAY
FLOW	.	.	0.0144	.	0.0103	.	32	MGD	.
TEMPERATURE (SUMMER)	.	.	26.62	.	26.62	.	4	DEGREES C	.
PH	.	.	6.41 (MIN)	8.01 (MAX)	N/A	N/A	63	STD. UNITS	.

PART B.

	MARK X BELIEVED PRESENT	BELIEVED ABSENT	2. EFFLUENT A. MAXIMUM DAILY VALUE CONCENTRATION	A. MASS	B. MAXIMUM 30 DAY VALUE CONCENTRATION	B. MASS	C. LONG TERM AVRG. VALUE CONCENTRATION	C. MASS	NO. OF ANALYSES	3. UNITS CONCENTRATION	MASS
BROMIDE,TOTAL (24959-67-6)	____	____	.	.	0.29	0.0344	0.29	0.0344	4	PPM	LB/DAY
CHLORINE, TOTAL RESIDUAL	____	__X__	NOT SAMPLED		NOT SAMPLED						
COLOR	____	____	.	.	22.5	N/A	22.5	N/A	4	NTU	.
FECAL COLIFORM	____	__X__	NOT SAMPLED		NOT SAMPLED						
FLUORIDE (16984-48-8)	____	____	.	.	1.2102	0.1434	1.2102	0.1434	4	PPM	LB/DAY
NITRATE + NITRITE	____	____	.	.	6.1075	0.7237	6.1075	0.7237	4	PPM	LB/DAY

CAS=. SITE=101 MONTH=. YEAR=. PARAMTR=COLOR FLOW=. _FREQ_=4 SAMPLES=. MAXDAYLD=. MAXDAYCN=. LTALOAD=N/A LTACONC=22.5 MAX30LD=N/A MAX30CN=22.5 ORDER=13 UNITSM=. UNITS=NTU INTAKEN=

INTAKEC= INTAKEMS= PAGE=V1 GROUP=POLLUTANT FIRST.SITE=0 LAST.SITE=0 FIRST.PAGE=0 LAST.PAGE=0 FIRST.GROUP=0 LAST.GROUP=0 _I_=. CHECK=0.6488 I=. FILLIT= _ERROR_=0 _N_=191

ITEM V-B CONTINUED
PART C.

EPA I.D. NUMBER= VA0004090 OUTFALL 101

1. POLLUTANT	MARK X BELIEVED PRESENT	MARK X BELIEVED ABSENT	2. EFFLUENT A. MAXIMUM DAILY VALUE CONCENTRATION	A. MAXIMUM DAILY VALUE MASS	B. MAXIMUM 30 DAY VALUE CONCENTRATION	B. MAXIMUM 30 DAY VALUE MASS	C. LONG TERM AVRG. VALUE CONCENTRATION	C. LONG TERM AVRG. VALUE MASS	NO. OF ANALYSES	3. UNITS CONCENTRATION	3. UNITS MASS
POLLUTANT											
NITROGEN, TOTAL ORG. AS N	___	___	.	.	0.85	0.1007	0.85	0.1007	4	PPM	LB/DAY
OIL & GREASE	___	___	.	.	<5	<0.5925	<5	<0.5925	4	PPM	LB/DAY
PHOSPHORUS (AS P), TOTAL (7723-14-0)	___	___	.	.	4.205	0.4983	4.205	0.4983	4	PPM	LB/DAY
J. RADIOACTIVITY											
ALPHA, TOTAL	___	___	.	.	<1.275	.	<1.275	.	4	PPM	LB/DAY
BETA, TOTAL	___	___	.	.	14.95	.	14.95	.	4	PPM	LB/DAY
SULFATE (AS SO4)	___	___	.	.	10.97	1.2999	10.97	1.2999	4	PPM	LB/DAY
SULFIDE (AS S)	___	___	.	.	<0.01	<0.0012	<0.01	<0.0012	4	PPM	LB/DAY
SURFACTANTS	___	___	.	.	0.0903	0.0107	0.0903	0.0107	4	PPM	LB/DAY
ALUMINUM,TOTAL (7429-90-5)	___	___	.	.	<0.2625	<0.0311	<0.2625	<0.0311	4	PPM	LB/DAY
BARIUM,TOTAL (7440-39-3)	___	___	.	.	0.0135	0.0016	0.0135	0.0016	4	PPM	LB/DAY
BORON,TOTAL (7440-42-8)	___	___	.	.	0.4225	0.0501	0.4225	0.0501	4	PPM	LB/DAY
COBALT,TOTAL (7440-48-4)	___	___	.	.	<0.003	<0.0004	<0.003	<0.0004	4	PPM	LB/DAY
IRON,TOTAL (7439-89-6)	___	___	.	.	0.525	0.0622	0.525	0.0622	4	PPM	LB/DAY
MAGNESIUM,TOTAL (7439-95-4)	___	___	.	.	1.6775	0.1988	1.6775	0.1988	4	PPM	LB/DAY
MOLYBDENUM,TOTAL (7439-98-7)	___	___	.	.	0.001	0.0001	0.001	0.0001	4	PPM	LB/DAY
MANGANESE,TOTAL (7439-96-5)	___	___	.	.	<0.02	<0.0024	<0.02	<0.0024	4	PPM	LB/DAY
TIN,TOTAL (7440-31-5)	___	___	.	.	<0.005	<0.0006	<0.005	<0.0006	4	PPM	LB/DAY
TITANIUM,TOTAL (7440-32-6)	___	___	.	.	<0.01	<0.0012	<0.01	<0.0012	4	PPM	LB/DAY

CONTINUED FROM PAGE V2

EPA I.D. NUMBER= VA0004090 OUTFALL 101

1. POLLUTANT	MARK X TESTING REQUIRED	BELIEVED PRESENT	BELIEVED ABSENT	2. EFFLUENT A. MAXIMUM DAILY VALUE CONCENTRATION	A. MAXIMUM DAILY VALUE MASS	B. MAXIMUM 30 DAY VALUE CONCENTRATION	B. MAXIMUM 30 DAY VALUE MASS	C. LONG TERM AVRG. VALUE CONCENTRATION	C. LONG TERM AVRG. VALUE MASS	NO. OF ANALYSES	3. UNITS CONCENTRATION	3. UNITS MASS
METALS, CYANIDE, AND TOTAL PHENOLS												
POLLUTANT												
ANTIMONY,TOTAL (7440-36-0)	X			.	.	<0.0023	<0.0003	<0.0023	<0.0003	4	PPM	LB/DAY
ARSENIC,TOTAL (7440-38-2)	X			.	.	<0.003	<0.0004	<0.003	<0.0004	4	PPM	LB/DAY
BERYLLIUM,TOTAL (7440-41-7)	X			.	.	<0.0002	.	<0.0002	.	4	PPM	LB/DAY
CADMIUM,TOTAL (7440-43-9)	X			.	.	<0.0003	.	<0.0003	.	4	PPM	LB/DAY
CHROMIUM,TOTAL (7440-47-3)	X			.	.	<0.001	<0.0001	<0.001	<0.0001	4	PPM	LB/DAY
COPPER,TOTAL (7440-50-8)	X			.	.	0.0123	0.0015	0.0123	0.0015	4	PPM	LB/DAY
LEAD,TOTAL (7439-92-1)	X			.	.	<0.0015	<0.0002	<0.0015	<0.0002	4	PPM	LB/DAY
MERCURY,TOTAL (7439-97-6)	X			.	.	<0.0002	.	<0.0002	.	4	PPM	LB/DAY
NICKEL,TOTAL (7440-02-0)	X			.	.	<0.005	<0.0006	<0.005	<0.0006	4	PPM	LB/DAY
SELENIUM,TOTAL (7782-49-2)	X			.	.	<0.003	<0.0004	<0.003	<0.0004	4	PPM	LB/DAY
SILVER,TOTAL (7440-22-4)	X			.	.	<0.0013	<0.0002	<0.0013	<0.0002	4	PPM	LB/DAY
THALLIUM,TOTAL (7440-28-0)	X			.	.	<0.002	<0.0002	<0.002	<0.0002	4	PPM	LB/DAY
ZINC,TOTAL (7440-66-6)	X			.	.	0.0663	0.0079	0.0663	0.0079	4	PPM	LB/DAY
CYANIDE , TOTAL (0057-12-5)	X			.	.	<0.01	<0.0012	<0.01	<0.0012	4	PPM	LB/DAY
PHENOLS , TOTAL	X			.	.	0.06	0.0071	0.06	0.0071	4	PPM	LB/DAY

CONTINUED FROM PAGE V3

EPA I.D. NUMBER= VA0004090 OUTFALL 101

	MARK X TESTING REQUIRED	BELIEVED PRESENT	BELIEVED ABSENT	2. EFFLUENT A. MAXIMUM DAILY VALUE CONCENTRATION	A. MASS	B. MAXIMUM 30 DAY VALUE CONCENTRATION	B. MASS	C. LONG TERM AVRG. VALUE CONCENTRATION	C. MASS	NO. OF ANALYSES	3. UNITS CONCENTRATION	MASS
GCMS FRACTION - VOLATILE COMPOUNDS												
ACROLEIN (0107-02-8)	X		X	.	.	<0.0408	<0.0048	<0.0408	<0.0048	2	PPM	LB/DAY
ACRYLONITRILE (0107-13-1)	X		X	.	.	<0.0015	<0.0002	<0.0015	<0.0002	2	PPM	LB/DAY
BENZENE (0071-43-2)	X		X	.	.	<0.0044	<0.0005	<0.0044	<0.0005	2	PPM	LB/DAY
BIS (CHLOROMETHYL) ETHER (542-88-1)				NOT SAMPLED		NOT SAMPLED		NOT SAMPLED				
BROMOFORM (0075-25-2)	X		X	.	.	<0.0047	<0.0006	<0.0047	<0.0006	2	PPM	LB/DAY
CARBON TETRACHLORIDE (0056-23-5)	X		X	.	.	<0.0028	<0.0003	<0.0028	<0.0003	2	PPM	LB/DAY
CHLOROBENZENE (0108-90-7)	X		X	.	.	<0.006	<0.0007	<0.006	<0.0007	2	PPM	LB/DAY
DIBROMOCHLOROMETHANE (0124-48-1)	X		X	.	.	<0.0031	<0.0004	<0.0031	<0.0004	2	PPM	LB/DAY
CHLOROETHANE (0075-00-3)	X		X	.	.	<0.0011	<0.0001	<0.0011	<0.0001	2	PPM	LB/DAY
2-CHLOROETHYLVINYL ETHER (0110-75-8)	X		X	.	.	<0.0012	<0.0001	<0.0012	<0.0001	2	PPM	LB/DAY
CHLOROFORM (0067-66-3)	X		X	.	.	<320.8908	<38.0252	<320.8908	<38.0252	4	PPM	LB/DAY
BROMODICHLOROMETHANE (0075-27-4)	X		X	.	.	<0.0022	<0.0003	<0.0022	<0.0003	2	PPM	LB/DAY
1,1-DICHLOROETHANE (0075-34-3)	X		X	.	.	<0.0047	<0.0006	<0.0047	<0.0006	2	PPM	LB/DAY
1,2-DICHLOROETHANE (0107-06-2)	X		X	.	.	<0.0028	<0.0003	<0.0028	<0.0003	2	PPM	LB/DAY
1,1-DICHLOROETHENE (0075-35-4)	X		X	.	.	<0.0028	<0.0003	<0.0028	<0.0003	2	PPM	LB/DAY
1,2-DICHLOROPROPANE (0078-87-5)	X		X	.	.	<0.006	<0.0007	<0.006	<0.0007	2	PPM	LB/DAY
TRANS-1,3-DICHLOROPROPENE (10061026)	X		X	.	.	<0.0009	<0.0001	<0.0009	<0.0001	2	PPM	LB/DAY
ETHYL BENZENE (0100-41-4)	X		X	.	.	<0.0072	<0.0009	<0.0072	<0.0009	2	PPM	LB/DAY
BROMOMETHANE (0074-83-9)	X		X	.	.	<0.0014	<0.0002	<0.0014	<0.0002	2	PPM	LB/DAY
CHLOROMETHANE (0074-87-3)	X		X	.	.	<0.0011	<0.0001	<0.0011	<0.0001	2	PPM	LB/DAY

CONTINUED FROM PAGE V4

EPA I.D. NUMBER= VA0004090 OUTFALL 101

	MARK X TESTING REQUIRED	BELIEVED PRESENT	BELIEVED ABSENT	2. EFFLUENT A. MAXIMUM DAILY VALUE CONCENTRATION	A. MASS	B. MAXIMUM 30 DAY VALUE CONCENTRATION	B. MASS	C. LONG TERM AVRG. VALUE CONCENTRATION	C. MASS	NO. OF ANALYSES	3. UNITS CONCENTRATION	MASS
GCMS FRACTION - VOLATILE COMPOUNDS (CONT												
METHYLENE CHLORIDE (0075-09-2)	X		X	.	.	<0.0028	<0.0003	<0.0028	<0.0003	2	PPM	LB/DAY
1,1,2,2-TETRACHLOROETHANE (0079-34-5)	X		X	.	.	<0.0069	<0.0008	<0.0069	<0.0008	2	PPM	LB/DAY
TETRACHLOROETHENE (0127-18-4)	X		X	.	.	<0.0041	<0.0005	<0.0041	<0.0005	2	PPM	LB/DAY
TOLUENE (0108-88-3)	X		X	.	.	<0.006	<0.0007	<0.006	<0.0007	2	PPM	LB/DAY
1 2-TRANS-DICHLOROETHYLENE (0156-60-5)	X		X	.	.	<0.0016	<0.0002	<0.0016	<0.0002	2	PPM	LB/DAY
1,1,1-TRICHLOROETHANE (0071-55-6)	X		X	.	.	<0.0038	<0.0005	<0.0038	<0.0005	2	PPM	LB/DAY
1,1,2-TRICHLOROETHANE (0079-00-5)	X		X	.	.	<0.005	<0.0006	<0.005	<0.0006	2	PPM	LB/DAY
TRICHLOROETHENE (0079-01-6)	X		X	.	.	<0.0019	<0.0002	<0.0019	<0.0002	2	PPM	LB/DAY
TRICHLOROFLUOROMETHANE (75-69-4)				NOT SAMPLED		NOT SAMPLED		NOT SAMPLED				
VINYL CHLORIDE (0075-01-4)	X		X	.	.	<0.0018	<0.0002	<0.0018	<0.0002	2	PPM	LB/DAY
GCMS FRACTION - ACID COMPOUNDS												
2-CHLOROPHENOL (0095-57-8)	X		X	.	.	<0.0033	<0.0004	<0.0033	<0.0004	2	PPM	LB/DAY
2,4-DICHLOROPHENOL (0120-83-2)	X		X	.	.	<0.0056	<0.0007	<0.0056	<0.0007	2	PPM	LB/DAY
2,4-DIMETHYLPHENOL (0105-67-9)	X		X	.	.	<0.0052	<0.0006	<0.0052	<0.0006	2	PPM	LB/DAY
4,6-DINITRO-2-METHYLPHENOL (0534-52-1)	X		X	.	.	<0.024	<0.0028	<0.024	<0.0028	2	PPM	LB/DAY
2,4-DINITROPHENOL (0051-28-5)	X		X	.	.	<0.042	<0.005	<0.042	<0.005	2	PPM	LB/DAY
2-NITROPHENOL (0088-75-5)	X		X	.	.	<0.0036	<0.0004	<0.0036	<0.0004	2	PPM	LB/DAY
4-NITROPHENOL (0100-02-7)	X		X	.	.	<0.0024	<0.0003	<0.0024	<0.0003	2	PPM	LB/DAY
4-CHLORO-3-METHYLPHENOL (0059-50-7)	X		X	.	.	<0.0075	<0.0009	<0.0075	<0.0009	2	PPM	LB/DAY
PENTACHLOROPHENOL (0087-86-5)	X		X	.	.	<0.0036	<0.0004	<0.0036	<0.0004	2	PPM	LB/DAY
PHENOL (0108-95-2)	X		X	.	.	<0.0027	<0.0003	<0.0027	<0.0003	2	PPM	LB/DAY
2,4,6-TRICHLOROPHENOL (0088-06-2)	X		X	.	.	<0.0027	<0.0003	<0.0027	<0.0003	2	PPM	LB/DAY

CONTINUED FROM PAGE V5

EPA I.D. NUMBER= VA0004090 OUTFALL 101

	MARK X TESTING REQUIRED	BELIEVED PRESENT	BELIEVED ABSENT	2. EFFLUENT A. MAXIMUM DAILY VALUE CONCENTRATION	A. MASS	B. MAXIMUM 30 DAY VALUE CONCENTRATION	B. MASS	C. LONG TERM AVRG. VALUE CONCENTRATION	C. MASS	NO. OF ANALYSES	3. UNITS CONCENTRATION	MASS
GCMS FRACTION - BASE/NEUTRAL COMPOUNDS												
ACENAPHTHENE (0083-32-9)	X		X	.	.	<0.003	<0.0004	<0.003	<0.0004	2	PPM	LB/DAY
ACENAPHTHYLENE (0208-96-8)	X		X	.	.	<0.0035	<0.0004	<0.0035	<0.0004	2	PPM	LB/DAY
ANTHRACENE (0120-12-7)	X		X	.	.	<0.0019	<0.0002	<0.0019	<0.0002	2	PPM	LB/DAY
BENZIDINE (0092-87-5)	X		X	.	.	<0.063	<0.0075	<0.063	<0.0075	2	PPM	LB/DAY
BENZO(A)ANTHRACENE (0056-55-3)	X		X	.	.	<0.0165	<0.002	<0.0165	<0.002	2	PPM	LB/DAY
BENZO(A)PYRENE (0050-32-8)	X		X	.	.	<0.0025	<0.0003	<0.0025	<0.0003	2	PPM	LB/DAY
BENZO(B)FLUORANTHENE (0205-99-2)	X		X	.	.	<0.0048	<0.0006	<0.0048	<0.0006	2	PPM	LB/DAY
BENZO(G H I)PERYLENE (0191-24-2)	X		X	.	.	<0.0041	<0.0005	<0.0041	<0.0005	2	PPM	LB/DAY
BENZO(K)FLUORANTHENE (0207-08-9)	X		X	.	.	<0.0025	<0.0003	<0.0025	<0.0003	2	PPM	LB/DAY
BIS(2-CHLOROETHOXY)METHANE (0111-91-1)	X		X	.	.	<0.0053	<0.0006	<0.0053	<0.0006	2	PPM	LB/DAY
BIS(-2-CHLOROETHYL)ETHER (0111-44-4)	X		X	.	.	<0.0057	<0.0007	<0.0057	<0.0007	2	PPM	LB/DAY
BIS(2-CHLOROISOPROPYL)ETHER (102-60-1)				NOT SAMPLED		NOT SAMPLED		NOT SAMPLED				
BIS(2-ETHYLHEXYL)PHTHALATE (0117-81-7)	X		X	.	.	<0.0025	<0.0003	<0.0025	<0.0003	2	PPM	LB/DAY
4-BROMOPHENYL-PHENYLETHER (0101-55-3)	X		X	.	.	<0.003	<0.0004	<0.003	<0.0004	2	PPM	LB/DAY
BUTYLBENZYLPHTHALATE (0085-68-7)	X		X	.	.	<0.0025	<0.0003	<0.0025	<0.0003	2	PPM	LB/DAY
2-CHLORONAPTHALENE (0091-58-7)	X		X	.	.	<0.0046	<0.0005	<0.0046	<0.0005	2	PPM	LB/DAY
4-CHLOROPHENYL-PHENYLETHER (7005-72-3)	X		X	.	.	<0.0042	<0.0005	<0.0042	<0.0005	2	PPM	LB/DAY
CHRYSENE (0218-01-9)	X		X	.	.	<0.0025	<0.0003	<0.0025	<0.0003	2	PPM	LB/DAY
DIBENZO(A H)ANTHRANCENE (0053-70-3)	X		X	.	.	<0.0025	<0.0003	<0.0025	<0.0003	2	PPM	LB/DAY
1,2-DICHLOROBENZENE (0095-50-1)	X		X	.	.	<0.004	<0.0005	<0.004	<0.0005	2	PPM	LB/DAY
1,3-DICHLOROBENZENE (0541-73-1)	X		X	.	.	<0.0031	<0.0004	<0.0031	<0.0004	2	PPM	LB/DAY

CONTINUED FROM PAGE V6

EPA I.D. NUMBER= VA0004090 OUTFALL 101

	MARK X TESTING REQUIRED	BELIEVED PRESENT	BELIEVED ABSENT	2. EFFLUENT A. MAXIMUM DAILY VALUE CONCENTRATION	A. MASS	B. MAXIMUM 30 DAY VALUE CONCENTRATION	B. MASS	C. LONG TERM AVRG. VALUE CONCENTRATION	C. MASS	NO. OF ANALYSES	3. UNITS CONCENTRATION	MASS
GCMS FRACTION - BASE/NEUTRAL COMP.(CONT)												
1,4-DICHLOROBENZENE (0106-46-7)	X		X	.	.	<0.0044	<0.0005	<0.0044	<0.0005	2	PPM	LB/DAY
3,3PR-DICHLOROBENZIDINE (0091-94-1)	X		X	.	.	<0.0078	<0.0009	<0.0078	<0.0009	2	PPM	LB/DAY
DIETHYLPHTHALATE (0084-66-2)	X		X	.	.	<0.0074	<0.0009	<0.0074	<0.0009	2	PPM	LB/DAY
DIMETHYL PHTHALATE (0131-11-3)	X		X	.	.	<0.0075	<0.0009	<0.0075	<0.0009	2	PPM	LB/DAY
DI-N-BUTYLPHTHALATE (0084-74-2)	X		X	.	.	<0.0064	<0.0008	<0.0064	<0.0008	2	PPM	LB/DAY
2,4-DINITROTOLUENE (0121-14-2)	X		X	.	.	<0.0057	<0.0007	<0.0057	<0.0007	2	PPM	LB/DAY
2,6-DINITROTOLUENE (0606-20-2)	X		X	.	.	<0.0034	<0.0004	<0.0034	<0.0004	2	PPM	LB/DAY
DI-N-OCTYLPHTHALATE (0117-84-0)	X		X	.	.	<0.0025	<0.0003	<0.0025	<0.0003	2	PPM	LB/DAY
1,2-DIPHENYLHYDRAZINE (0122-66-7)	X		X	.	.	<0.0088	<0.001	<0.0088	<0.001	2	PPM	LB/DAY
FLUORANTHENE (0206-44-0)	X		X	.	.	<0.0022	<0.0003	<0.0022	<0.0003	2	PPM	LB/DAY
FLUORENE (0086-73-7)	X		X	.	.	<0.0022	<0.0003	<0.0022	<0.0003	2	PPM	LB/DAY
HEXACHLOROBENZENE (0118-74-1)	X		X	.	.	<0.0031	<0.0004	<0.0031	<0.0004	2	PPM	LB/DAY
HEXACHLOROBUTADIENE (0087-68-3)	X		X	.	.	<0.0018	<0.0002	<0.0018	<0.0002	2	PPM	LB/DAY
HEXACHLOROCYCLOPENTADIENE (0077-47-4)	X		X	.	.	<0.02	<0.0024	<0.02	<0.0024	2	PPM	LB/DAY
HEXACHLOROETHANE (0067-72-1)	X		X	.	.	<0.0024	<0.0003	<0.0024	<0.0003	2	PPM	LB/DAY
INDENO(1,2,3-CD)PYRENE (0193-39-5)	X		X	.	.	<0.0037	<0.0004	<0.0037	<0.0004	2	PPM	LB/DAY
ISOPHORONE (0078-59-1)	X		X	.	.	<0.0051	<0.0006	<0.0051	<0.0006	2	PPM	LB/DAY
NAPHTHALENE (0091-20-3)	X		X	.	.	<0.0038	<0.0005	<0.0038	<0.0005	2	PPM	LB/DAY
NITROBENZENE (0098-95-3)	X		X	.	.	<0.0042	<0.0005	<0.0042	<0.0005	2	PPM	LB/DAY
N,NITROSODIMETHYLAMINE (0062-75-9)	X		X	.	.	<0.0062	<0.0007	<0.0062	<0.0007	2	PPM	LB/DAY
N-NITROSO-DI-N-PROPYLAMINE (0621-64-7)	X		X	.	.	<0.0036	<0.0004	<0.0036	<0.0004	2	PPM	LB/DAY

CONTINUED FROM PAGE V7

EPA I.D. NUMBER= VA0004090 OUTFALL 101

	MARK X TESTING REQUIRED	BELIEVED PRESENT	BELIEVED ABSENT	2. EFFLUENT A. MAXIMUM DAILY VALUE CONCENTRATION	A. MASS	B. MAXIMUM 30 DAY VALUE CONCENTRATION	B. MASS	C. LONG TERM AVRG. VALUE CONCENTRATION	C. MASS	NO. OF ANALYSES	3. UNITS CONCENTRATION	MASS
GCMS FRACTION - BASE/NEUTRAL COMP (CONT)												
N-NITROSODIPHENYLAMINE (0086-30-6)	X		X	.	.	<0.0027	<0.0003	<0.0027	<0.0003	2	PPM	LB/DAY
PHENANTHRENE (0085-01-8)	X		X	.	.	<0.0054	<0.0006	<0.0054	<0.0006	2	PPM	LB/DAY
PYRENE (0129-00-0)	X		X	.	.	<0.0038	<0.0005	<0.0038	<0.0005	2	PPM	LB/DAY
1,2,4-TRICHLORBENZENE (0120-82-1)	X		X	.	.	<0.0079	<0.0009	<0.0079	<0.0009	2	PPM	LB/DAY
GCMS FRACTION - PESTICIDES												
ALDRIN (0309-00-2)			X	.	.	<0.0019	<0.0002	<0.0019	<0.0002	2	PPM	LB/DAY
ALPHA BHC (0319-84-6)			X	.	.	<0.0031	<0.0004	<0.0031	<0.0004	2	PPM	LB/DAY
BETA BHC (0319-85-7)			X	.	.	<0.0042	<0.0005	<0.0042	<0.0005	2	PPM	LB/DAY
GAMMA BHC (0058-89-9)			X	.	.	<0.0022	<0.0003	<0.0022	<0.0003	2	PPM	LB/DAY
DELTA BHC (0319-86-8)			X	.	.	<0.0052	<0.0006	<0.0052	<0.0006	2	PPM	LB/DAY
CHLORDANE (0057-74-9)			X	.	.	<0.01	<0.0012	<0.01	<0.0012	2	PPM	LB/DAY
4,4PR-DDT (0050-29-3)			X	.	.	<0.0051	<0.0006	<0.0051	<0.0006	2	PPM	LB/DAY
4,4PR-DDE (0072-55-9)			X	.	.	<0.0056	<0.0007	<0.0056	<0.0007	2	PPM	LB/DAY
4,4PR-DDD (0072-54-8)			X	.	.	<0.0041	<0.0005	<0.0041	<0.0005	2	PPM	LB/DAY
DIELDRIN (0060-57-1)			X	.	.	<0.0044	<0.0005	<0.0044	<0.0005	2	PPM	LB/DAY
ALPHA-ENDOSULFAN (0115-29-7)			X	.	.	<0.0617	<0.0073	<0.0617	<0.0073	2	PPM	LB/DAY
BETA-ENDOSULFAN (0115-29-7)			X	.	.	<0.0803	<0.0095	<0.0803	<0.0095	2	PPM	LB/DAY
ENDOSULFAN SULFATE (1031-07-8)			X	.	.	<0.0056	<0.0007	<0.0056	<0.0007	2	PPM	LB/DAY
ENDRIN (0072-20-8)			X	.	.	<0.0056	<0.0007	<0.0056	<0.0007	2	PPM	LB/DAY
ENDRIN ALDEHYDE (7421-93-4)			X	.	.	<0.065	<0.0077	<0.065	<0.0077	2	PPM	LB/DAY
HEPTACHLOR (0076-44-8)			X	.	.	<0.0043	<0.0005	<0.0043	<0.0005	2	PPM	LB/DAY

CONTINUED FROM PAGE V8

EPA I.D. NUMBER= VA0004090 OUTFALL 101

	MARK X TESTING REQUIRED	BELIEVED PRESENT	BELIEVED ABSENT	2. EFFLUENT A. MAXIMUM DAILY VALUE CONCENTRATION	A. MAXIMUM DAILY VALUE MASS	B. MAXIMUM 30 DAY VALUE CONCENTRATION	B. MAXIMUM 30 DAY VALUE MASS	C. LONG TERM AVRG. VALUE CONCENTRATION	C. LONG TERM AVRG. VALUE MASS	NO. OF ANALYSES	3. UNITS CONCENTRATION	3. UNITS MASS
GCMS FRACTION - PESTICIDES (CONTINUED)												
HEPTACHLOR EPOXIDE (1025-57-3)	____	____	__X__	.	.	<0.0022	<0.0003	<0.0022	<0.0003	2	PPM	LB/DAY
PCB 1242 (53469219)	____	____	__X__	.	.	<0.05	<0.0059	<0.05	<0.0059	2	PPM	LB/DAY
PCB 1254 (11097691)	____	____	__X__	.	.	<0.036	<0.0043	<0.036	<0.0043	2	PPM	LB/DAY
PCB 1221 (11104282)	____	____	__X__	.	.	<0.03	<0.0036	<0.03	<0.0036	2	PPM	LB/DAY
PCB 1232 (11141165)	____	____	__X__	.	.	<0.05	<0.0059	<0.05	<0.0059	2	PPM	LB/DAY
PCB 1248 (12672296)	____	____	__X__	.	.	<0.05	<0.0059	<0.05	<0.0059	2	PPM	LB/DAY
PCB 1260 (11096825)	____	____	__X__	.	.	<0.05	<0.0059	<0.05	<0.0059	2	PPM	LB/DAY
PCB 1016 (12674112)	____	____	__X__	.	.	<0.05	<0.0059	<0.05	<0.0059	2	PPM	LB/DAY
TOXAPHENE (8001-35-2)	____	____	__X__	.	.	<0.05	<0.0059	<0.05	<0.0059	2	PPM	LB/DAY

EPA I.D. NUMBER= VA0004090

OUTFALL 102

V. INTAKE AND EFFLUENT CHARACTERISTICS (CONTINUED FROM PAGE 3 OF FORM 2C)

PART A- YOU MUST PROVIDE THE RESULTS OF AT LEAST ONE ANALYSIS FOR EVERY POLLUTANT IN THIS TABLE. COMPLETE ONE TABLE FOR EACH OUTFALL. SEE INSTRUCTIONS FOR ADDITIONAL DETAILS

POLLUTANT	2. EFFLUENT A. MAXIMUM DAILY VALUE CONCENTRATION	A. MAXIMUM DAILY VALUE MASS	B. MAXIMUM 30 DAY VALUE CONCENTRATION	B. MAXIMUM 30 DAY VALUE MASS	C. LONG TERM AVRG. VALUE CONCENTRATION	C. LONG TERM AVRG. VALUE MASS	NO. OF ANALYSES	3. UNITS CONCENTRATION	3. UNITS MASS
BIOCHEMICAL OXYGEN DEMAND	2.86	0.18616026	.	.	.	.	1	PPM	LB/DAY
CHEMICAL OXYGEN DEMAND	<5	<0.325455	.	.	.	.	1	PPM	LB/DAY
TOTAL ORGANIC CARBON	13.6	0.8852376	.	.	.	.	1	PPM	LB/DAY
TOTAL SUSPENDED SOLIDS	<4	<0.260364	.	.	.	.	1	PPM	LB/DAY
AMMONIA,TOTAL	3.82	0.24864762	.	.	.	.	1	PPM	LB/DAY
FLOW	.	.	0.0156	.	0.00804375	.	32	MGD	.
TEMPERATURE (SUMMER)	34.1	.	.	.	.	.	1	DEGREES C	.
PH	.	.	6.39 (MIN)	7.72 (MAX)	N/A	N/A	33	STD. UNITS	.

PART B.

	MARK X BELIEVED PRESENT	MARK X BELIEVED ABSENT	2. EFFLUENT A. MAXIMUM DAILY VALUE CONCENTRATION	A. MAXIMUM DAILY VALUE MASS	B. MAXIMUM 30 DAY VALUE CONCENTRATION	B. MAXIMUM 30 DAY VALUE MASS	C. LONG TERM AVRG. VALUE CONCENTRATION	C. LONG TERM AVRG. VALUE MASS	NO. OF ANALYSES	3. UNITS CONCENTRATION	3. UNITS MASS
BROMIDE,TOTAL (24959-67-6)	____	____	0.48	0.03124368	.	.	.	.	1	PPM	LB/DAY
CHLORINE, TOTAL RESIDUAL	____	__X__	NOT SAMPLED		NOT SAMPLED						
FLUORIDE (16984-48-8)	____	____	0.054	0.003514914	.	.	.	.	1	PPM	LB/DAY
NITRATE + NITRITE	____	____	0.05	0.00325455	.	.	.	.	1	PPM	LB/DAY

ITEM V-B CONTINUED
PART C.

EPA I.D. NUMBER= VA0004090 OUTFALL 102

1. POLLUTANT	MARK X BELIEVED PRESENT	MARK X BELIEVED ABSENT	2. EFFLUENT A. MAXIMUM DAILY VALUE CONCENTRATION	A. MAXIMUM DAILY VALUE MASS	B. MAXIMUM 30 DAY VALUE CONCENTRATION	B. MAXIMUM 30 DAY VALUE MASS	C. LONG TERM AVRG. VALUE CONCENTRATION	C. LONG TERM AVRG. VALUE MASS	NO. OF ANALYSES	3. UNITS CONCENTRATION	3. UNITS MASS
POLLUTANT											
NITROGEN, TOTAL ORG. AS N	____	____	2.38	0.15491658	.	.	.	.	1	PPM	LB/DAY
OIL & GREASE	____	____	.	.	<5	<0.6509	<5	<0.3356	32	PPM	LB/DAY
PHOSPHORUS (AS P), TOTAL (7723-14-0)	____	____	0.01	0.00065091	.	.	.	.	1	PPM	LB/DAY
J. RADIOACTIVITY											
ALPHA, TOTAL	____	____	<0.8	.	.	.	.	.	1	PPM	LB/DAY
BETA, TOTAL	____	____	<1.1	.	.	.	.	.	1	PPM	LB/DAY
RADIUM,TOTAL	____	____	0.5	0.0325455	.	.	.	.	1	PPM	LB/DAY
RADIUM 226 , TOTAL	____	____	0.3	0.0195273	.	.	.	.	1	PPM	LB/DAY
SULFATE (AS SO4)	____	____	3.92	0.25515672	.	.	.	.	1	PPM	LB/DAY
SULFIDE (AS S)	____	____	<0.01	<0.00065091	.	.	.	.	1	PPM	LB/DAY
SURFACTANTS	____	____	<0.025	<0.001627275	.	.	.	.	1	PPM	LB/DAY
ALUMINUM,TOTAL (7429-90-5)	____	____	<0.2	<0.0130182	.	.	.	.	1	PPM	LB/DAY
BARIUM,TOTAL (7440-39-3)	____	____	0.003	0.000195273	.	.	.	.	1	PPM	LB/DAY
BORON,TOTAL (7440-42-8)	____	____	<0.02	<0.00130182	.	.	.	.	1	PPM	LB/DAY
COBALT,TOTAL (7440-48-4)	____	____	<0.003	<0.000195273	.	.	.	.	1	PPM	LB/DAY
IRON,TOTAL (7439-89-6)	____	____	0.1	0.0065091	.	.	.	.	1	PPM	LB/DAY
MAGNESIUM,TOTAL (7439-95-4)	____	____	1.3	0.0846183	.	.	.	.	1	PPM	LB/DAY
MOLYBDENUM,TOTAL (7439-98-7)	____	____	<0.001	<0.000065091	.	.	.	.	1	PPM	LB/DAY
MANGANESE,TOTAL (7439-96-5)	____	____	<0.02	<0.00130182	.	.	.	.	1	PPM	LB/DAY
TIN,TOTAL (7440-31-5)	____	____	<0.005	<0.000325455	.	.	.	.	1	PPM	LB/DAY
TITANIUM,TOTAL (7440-32-6)	____	____	<0.01	<0.00065091	.	.	.	.	1	PPM	LB/DAY

CONTINUED FROM PAGE V2

EPA I.D. NUMBER= VA0004090 OUTFALL 102

1. POLLUTANT	MARK X TESTING REQUIRED	BELIEVED PRESENT	BELIEVED ABSENT	2. EFFLUENT A. MAXIMUM DAILY VALUE CONCENTRATION	A. MASS	B. MAXIMUM 30 DAY VALUE CONCENTRATION	B. MASS	C. LONG TERM AVRG. VALUE CONCENTRATION	C. MASS	3. UNITS NO. OF ANALYSES	CONCENTRATION	MASS
METALS, CYANIDE, AND TOTAL PHENOLS												
POLLUTANT												
ANTIMONY,TOTAL (7440-36-0)	X			<0.002	<0.000130182	.	.	.	.	1	PPM	LB/DAY
ARSENIC,TOTAL (7440-38-2)	X			<0.003	<0.000195273	.	.	.	.	1	PPM	LB/DAY
BERYLLIUM,TOTAL (7440-41-7)	X			<0.0002	<0.0000130182	.	.	.	.	1	PPM	LB/DAY
CADMIUM,TOTAL (7440-43-9)	X			<0.0003	<0.0000195273	.	.	.	.	1	PPM	LB/DAY
CHROMIUM,TOTAL (7440-47-3)	X			<0.001	<0.000065091	.	.	.	.	1	PPM	LB/DAY
COPPER,TOTAL (7440-50-8)	X			0.006	0.000390546	.	.	.	.	1	PPM	LB/DAY
LEAD,TOTAL (7439-92-1)	X			<0.001	<0.000065091	.	.	.	.	1	PPM	LB/DAY
MERCURY,TOTAL (7439-97-6)	X			<0.0002	<0.0000130182	.	.	.	.	1	PPM	LB/DAY
NICKEL,TOTAL (7440-02-0)	X			<0.005	<0.000325455	.	.	.	.	1	PPM	LB/DAY
SELENIUM,TOTAL (7782-49-2)	X			0.004	0.000260364	.	.	.	.	1	PPM	LB/DAY
SILVER,TOTAL (7440-22-4)	X			0.0002	0.0000130182	.	.	.	.	1	PPM	LB/DAY
THALLIUM,TOTAL (7440-28-0)	X			<0.002	<0.000130182	.	.	.	.	1	PPM	LB/DAY
ZINC,TOTAL (7440-66-6)	X			0.031	0.002017821	.	.	.	.	1	PPM	LB/DAY
CYANIDE , TOTAL (0057-12-5)	X			<0.01	<0.00065091	.	.	.	.	1	PPM	LB/DAY
PHENOLS , TOTAL	X			0.02	0.00130182	.	.	.	.	1	PPM	LB/DAY

CONTINUED FROM PAGE V3

EPA I.D. NUMBER= VA0004090 OUTFALL 102

	MARK X TESTING REQUIRED	BELIEVED PRESENT	BELIEVED ABSENT	2. EFFLUENT A. MAXIMUM DAILY VALUE CONCENTRATION	A. MASS	B. MAXIMUM 30 DAY VALUE CONCENTRATION	B. MASS	C. LONG TERM AVRG. VALUE CONCENTRATION	C. MASS	3. UNITS NO. OF ANALYSES	CONCENTRATION	MASS
GCMS FRACTION - VOLATILE COMPOUNDS												
ACROLEIN (0107-02-8)	X		X	<0.0408	<0.0026557128	.	.	.	.	1	PPM	LB/DAY
ACRYLONITRILE (0107-13-1)	X		X	<0.0015	<0.0000976365	.	.	.	.	1	PPM	LB/DAY
BENZENE (0071-43-2)	X		X	<0.0044	<0.0002864004	.	.	.	.	1	PPM	LB/DAY
BIS (CHLOROMETHYL) ETHER (542-88-1)				NOT SAMPLED		NOT SAMPLED		NOT SAMPLED				
BROMOFORM (0075-25-2)	X		X	<0.0047	<0.0003059277	.	.	.	.	1	PPM	LB/DAY
CARBON TETRACHLORIDE (0056-23-5)	X		X	<0.0028	<0.0001822548	.	.	.	.	1	PPM	LB/DAY
CHLOROBENZENE (0108-90-7)	X		X	<0.006	<0.000390546	.	.	.	.	1	PPM	LB/DAY
DIBROMOCHLOROMETHANE (0124-48-1)	X		X	<0.0031	<0.0002017821	.	.	.	.	1	PPM	LB/DAY
CHLOROETHANE (0075-00-3)	X		X	<0.0011	<0.0000716001	.	.	.	.	1	PPM	LB/DAY
2-CHLOROETHYLVINYL ETHER (0110-75-8)	X		X	<0.0012	<0.0000781092	.	.	.	.	1	PPM	LB/DAY
CHLOROFORM (0067-66-3)	X		X	<0.0016	<0.0001041456	.	.	.	.	1	PPM	LB/DAY
BROMODICHLOROMETHANE (0075-27-4)	X		X	<0.0022	<0.0001432002	.	.	.	.	1	PPM	LB/DAY
1,1-DICHLOROETHANE (0075-34-3)	X		X	<0.0047	<0.0003059277	.	.	.	.	1	PPM	LB/DAY
1,2-DICHLOROETHANE (0107-06-2)	X		X	<0.0028	<0.0001822548	.	.	.	.	1	PPM	LB/DAY
1,1-DICHLOROETHENE (0075-35-4)	X		X	<0.0028	<0.0001822548	.	.	.	.	1	PPM	LB/DAY
1,2-DICHLOROPROPANE (0078-87-5)	X		X	<0.006	<0.000390546	.	.	.	.	1	PPM	LB/DAY
TRANS-1,3-DICHLOROPROPENE (10061026)	X		X	<0.0009	<0.0000585819	.	.	.	.	1	PPM	LB/DAY
ETHYL BENZENE (0100-41-4)	X		X	<0.0072	<0.0004686552	.	.	.	.	1	PPM	LB/DAY
BROMOMETHANE (0074-83-9)	X		X	<0.0014	<0.0000911274	.	.	.	.	1	PPM	LB/DAY
CHLOROMETHANE (0074-87-3)	X		X	<0.0011	<0.0000716001	.	.	.	.	1	PPM	LB/DAY

CONTINUED FROM PAGE V4

EPA I.D. NUMBER= VA0004090 OUTFALL 102

	MARK X TESTING REQUIRED	BELIEVED PRESENT	BELIEVED ABSENT	2. EFFLUENT A. MAXIMUM DAILY VALUE CONCENTRATION	A. MASS	B. MAXIMUM 30 DAY VALUE CONCENTRATION	B. MASS	C. LONG TERM AVRG. VALUE CONCENTRATION	C. MASS	3. UNITS NO. OF ANALYSES	CONCENTRATION	MASS
GCMS FRACTION - VOLATILE COMPOUNDS (CONT												
METHYLENE CHLORIDE (0075-09-2)	X		X	<0.0028	<0.0001822548	.	.	.	.	1	PPM	LB/DAY
1,1,2,2-TETRACHLOROETHANE (0079-34-5)	X		X	<0.0069	<0.0004491279	.	.	.	.	1	PPM	LB/DAY
TETRACHLOROETHENE (0127-18-4)	X		X	<0.0041	<0.0002668731	.	.	.	.	1	PPM	LB/DAY
TOLUENE (0108-88-3)	X		X	<0.006	<0.000390546	.	.	.	.	1	PPM	LB/DAY
1 2-TRANS-DICHLOROETHYLENE (0156-60-5)	X		X	<0.0016	<0.0001041456	.	.	.	.	1	PPM	LB/DAY
1,1,1-TRICHLOROETHANE (0071-55-6)	X		X	<0.0038	<0.0002473458	.	.	.	.	1	PPM	LB/DAY
1,1,2-TRICHLOROETHANE (0079-00-5)	X		X	<0.005	<0.000325455	.	.	.	.	1	PPM	LB/DAY
TRICHLOROETHENE (0079-01-6)	X		X	<0.0019	<0.0001236729	.	.	.	.	1	PPM	LB/DAY
TRICHLOROFLUOROMETHANE (75-69-4)				NOT SAMPLED		NOT SAMPLED		NOT SAMPLED				
VINYL CHLORIDE (0075-01-4)	X		X	<0.0018	<0.0001171638	.	.	.	.	1	PPM	LB/DAY
GCMS FRACTION - ACID COMPOUNDS												
2-CHLOROPHENOL (0095-57-8)	X		X	<0.0033	<0.0002148003	.	.	.	.	1	PPM	LB/DAY
2,4-DICHLOROPHENOL (0120-83-2)	X		X	<0.0056	<0.0003645096	.	.	.	.	1	PPM	LB/DAY
2,4-DIMETHYLPHENOL (0105-67-9)	X		X	<0.0052	<0.0003384732	.	.	.	.	1	PPM	LB/DAY
4,6-DINITRO-2-METHYLPHENOL (0534-52-1)	X		X	<0.024	<0.001562184	.	.	.	.	1	PPM	LB/DAY
2,4-DINITROPHENOL (0051-28-5)	X		X	<0.042	<0.002733822	.	.	.	.	1	PPM	LB/DAY
2-NITROPHENOL (0088-75-5)	X		X	<0.0036	<0.0002343276	.	.	.	.	1	PPM	LB/DAY
4-NITROPHENOL (0100-02-7)	X		X	<0.0024	<0.0001562184	.	.	.	.	1	PPM	LB/DAY
4-CHLORO-3-METHYLPHENOL (0059-50-7)	X		X	<0.0075	<0.0004881825	.	.	.	.	1	PPM	LB/DAY
PENTACHLOROPHENOL (0087-86-5)	X		X	<0.0036	<0.0002343276	.	.	.	.	1	PPM	LB/DAY
PHENOL (0108-95-2)	X		X	<0.0027	<0.0001757457	.	.	.	.	1	PPM	LB/DAY
2,4,6-TRICHLOROPHENOL (0088-06-2)	X		X	<0.0027	<0.0001757457	.	.	.	.	1	PPM	LB/DAY

CONTINUED FROM PAGE V5

EPA I.D. NUMBER= VA0004090 OUTFALL 102

	MARK X TESTING REQUIRED	BELIEVED PRESENT	BELIEVED ABSENT	2. EFFLUENT A. MAXIMUM DAILY VALUE CONCENTRATION	A. MASS	B. MAXIMUM 30 DAY VALUE CONCENTRATION	B. MASS	C. LONG TERM AVRG. VALUE CONCENTRATION	C. MASS	NO. OF ANALYSES	3. UNITS CONCENTRATION	MASS
GCMS FRACTION - BASE/NEUTRAL COMPOUNDS												
ACENAPHTHENE (0083-32-9)	X		X	<0.003	<0.000195273	.	.	.	.	1	PPM	LB/DAY
ACENAPHTHYLENE (0208-96-8)	X		X	<0.0035	<0.0002278185	.	.	.	.	1	PPM	LB/DAY
ANTHRACENE (0120-12-7)	X		X	<0.0019	<0.0001236729	.	.	.	.	1	PPM	LB/DAY
BENZIDINE (0092-87-5)	X		X	<0.063	<0.004100733	.	.	.	.	1	PPM	LB/DAY
BENZO(A)ANTHRACENE (0056-55-3)	X		X	<0.0165	<0.0010740015	.	.	.	.	1	PPM	LB/DAY
BENZO(A)PYRENE (0050-32-8)	X		X	<0.0025	<0.0001627275	.	.	.	.	1	PPM	LB/DAY
BENZO(B)FLUORANTHENE (0205-99-2)	X		X	<0.0048	<0.0003124368	.	.	.	.	1	PPM	LB/DAY
BENZO(G H I)PERYLENE (0191-24-2)	X		X	<0.0041	<0.0002668731	.	.	.	.	1	PPM	LB/DAY
BENZO(K)FLUORANTHENE (0207-08-9)	X		X	<0.0025	<0.0001627275	.	.	.	.	1	PPM	LB/DAY
BIS(2-CHLOROETHOXY)METHANE (0111-91-1)	X		X	<0.0053	<0.0003449823	.	.	.	.	1	PPM	LB/DAY
BIS(-2-CHLOROETHYL)ETHER (0111-44-4)	X		X	<0.0057	<0.0003710187	.	.	.	.	1	PPM	LB/DAY
BIS(2-CHLOROISOPROPYL)ETHER (102-60-1)				NOT SAMPLED		NOT SAMPLED		NOT SAMPLED				
BIS(2-ETHYLHEXYL)PHTHALATE (0117-81-7)	X		X	<0.0025	<0.0001627275	.	.	.	.	1	PPM	LB/DAY
4-BROMOPHENYL-PHENYLETHER (0101-55-3)	X		X	<0.003	<0.000195273	.	.	.	.	1	PPM	LB/DAY
BUTYLBENZYLPHTHALATE (0085-68-7)	X		X	<0.0025	<0.0001627275	.	.	.	.	1	PPM	LB/DAY
2-CHLORONAPTHALENE (0091-58-7)	X		X	<0.0046	<0.0002994186	.	.	.	.	1	PPM	LB/DAY
4-CHLOROPHENYL-PHENYLETHER (7005-72-3)	X		X	<0.0042	<0.0002733822	.	.	.	.	1	PPM	LB/DAY
CHRYSENE (0218-01-9)	X		X	<0.0025	<0.0001627275	.	.	.	.	1	PPM	LB/DAY
DIBENZO(A H)ANTHRANCENE (0053-70-3)	X		X	<0.0025	<0.0001627275	.	.	.	.	1	PPM	LB/DAY
1,2-DICHLOROBENZENE (0095-50-1)	X		X	<0.004	<0.000260364	.	.	.	.	1	PPM	LB/DAY
1,3-DICHLOROBENZENE (0541-73-1)	X		X	<0.0031	<0.0002017821	.	.	.	.	1	PPM	LB/DAY

CONTINUED FROM PAGE V6

EPA I.D. NUMBER= VA0004090 OUTFALL 102

	MARK X TESTING REQUIRED	BELIEVED PRESENT	BELIEVED ABSENT	2. EFFLUENT A. MAXIMUM DAILY VALUE CONCENTRATION	A. MASS	B. MAXIMUM 30 DAY VALUE CONCENTRATION	B. MASS	C. LONG TERM AVRG. VALUE CONCENTRATION	C. MASS	NO. OF ANALYSES	3. UNITS CONCENTRATION	MASS
GCMS FRACTION - BASE/NEUTRAL COMP.(CONT)												
1,4-DICHLOROBENZENE (0106-46-7)	X		X	<0.0044	<0.0002864004	.	.	.	.	1	PPM	LB/DAY
3,3PR-DICHLOROBENZIDINE (0091-94-1)	X		X	<0.0078	<0.0005077098	.	.	.	.	1	PPM	LB/DAY
DIETHYLPHTHALATE (0084-66-2)	X		X	<0.0074	<0.0004816734	.	.	.	.	1	PPM	LB/DAY
DIMETHYL PHTHALATE (0131-11-3)	X		X	<0.0075	<0.0004881825	.	.	.	.	1	PPM	LB/DAY
DI-N-BUTYLPHTHALATE (0084-74-2)	X		X	<0.0064	<0.0004165824	.	.	.	.	1	PPM	LB/DAY
2,4-DINITROTOLUENE (0121-14-2)	X		X	<0.0057	<0.0003710187	.	.	.	.	1	PPM	LB/DAY
2,6-DINITROTOLUENE (0606-20-2)	X		X	<0.0034	<0.0002213094	.	.	.	.	1	PPM	LB/DAY
DI-N-OCTYLPHTHALATE (0117-84-0)	X		X	<0.0025	<0.0001627275	.	.	.	.	1	PPM	LB/DAY
1,2-DIPHENYLHYDRAZINE (0122-66-7)	X		X	<0.0088	<0.0005728008	.	.	.	.	1	PPM	LB/DAY
FLUORANTHENE (0206-44-0)	X		X	<0.0022	<0.0001432002	.	.	.	.	1	PPM	LB/DAY
FLUORENE (0086-73-7)	X		X	<0.0022	<0.0001432002	.	.	.	.	1	PPM	LB/DAY
HEXACHLOROBENZENE (0118-74-1)	X		X	<0.0031	<0.0002017821	.	.	.	.	1	PPM	LB/DAY
HEXACHLOROBUTADIENE (0087-68-3)	X		X	<0.0018	<0.0001171638	.	.	.	.	1	PPM	LB/DAY
HEXACHLOROCYCLOPENTADIENE (0077-47-4)	X		X	<0.02	<0.00130182	.	.	.	.	1	PPM	LB/DAY
HEXACHLOROETHANE (0067-72-1)	X		X	<0.0024	<0.0001562184	.	.	.	.	1	PPM	LB/DAY
INDENO(1,2,3-CD)PYRENE (0193-39-5)	X		X	<0.0037	<0.0002408367	.	.	.	.	1	PPM	LB/DAY
ISOPHORONE (0078-59-1)	X		X	<0.0051	<0.0003319641	.	.	.	.	1	PPM	LB/DAY
NAPHTHALENE (0091-20-3)	X		X	<0.0038	<0.0002473458	.	.	.	.	1	PPM	LB/DAY
NITROBENZENE (0098-95-3)	X		X	<0.0042	<0.0002733822	.	.	.	.	1	PPM	LB/DAY
N,NITROSODIMETHYLAMINE (0062-75-9)	X		X	<0.0062	<0.0004035642	.	.	.	.	1	PPM	LB/DAY
N-NITROSO-DI-N-PROPYLAMINE (0621-64-7)	X		X	<0.0036	<0.0002343276	.	.	.	.	1	PPM	LB/DAY

CONTINUED FROM PAGE V7

EPA I.D. NUMBER= VA0004090 OUTFALL 102

	MARK X TESTING REQUIRED	BELIEVED PRESENT	BELIEVED ABSENT	2. EFFLUENT A. MAXIMUM DAILY VALUE CONCENTRATION	A. MASS	B. MAXIMUM 30 DAY VALUE CONCENTRATION	B. MASS	C. LONG TERM AVRG. VALUE CONCENTRATION	C. MASS	NO. OF ANALYSES	3. UNITS CONCENTRATION	MASS
GCMS FRACTION - BASE/NEUTRAL COMP (CONT)												
N-NITROSODIPHENYLAMINE (0086-30-6)	X		X	<0.0027	<0.0001757457	.	.	.	.	1	PPM	LB/DAY
PHENANTHRENE (0085-01-8)	X		X	<0.0054	<0.0003514914	.	.	.	.	1	PPM	LB/DAY
PYRENE (0129-00-0)	X		X	<0.0038	<0.0002473458	.	.	.	.	1	PPM	LB/DAY
1,2,4-TRICHLORBENZENE (0120-82-1)	X		X	<0.0079	<0.0005142189	.	.	.	.	1	PPM	LB/DAY
GCMS FRACTION - PESTICIDES												
ALDRIN (0309-00-2)			X	<0.0019	<0.0001236729	.	.	.	.	1	PPM	LB/DAY
ALPHA BHC (0319-84-6)			X	<0.0031	<0.0002017821	.	.	.	.	1	PPM	LB/DAY
BETA BHC (0319-85-7)			X	<0.0042	<0.0002733822	.	.	.	.	1	PPM	LB/DAY
GAMMA BHC (0058-89-9)			X	<0.0022	<0.0001432002	.	.	.	.	1	PPM	LB/DAY
DELTA BHC (0319-86-8)			X	<0.0052	<0.0003384732	.	.	.	.	1	PPM	LB/DAY
CHLORDANE (0057-74-9)			X	<0.01	<0.00065091	.	.	.	.	1	PPM	LB/DAY
4,4PR-DDT (0050-29-3)			X	<0.0051	<0.0003319641	.	.	.	.	1	PPM	LB/DAY
4,4PR-DDE (0072-55-9)			X	<0.0056	<0.0003645096	.	.	.	.	1	PPM	LB/DAY
4,4PR-DDD (0072-54-8)			X	<0.0041	<0.0002668731	.	.	.	.	1	PPM	LB/DAY
DIELDRIN (0060-57-1)			X	<0.0044	<0.0002864004	.	.	.	.	1	PPM	LB/DAY
ALPHA-ENDOSULFAN (0115-29-7)			X	<0.0617	<0.0040161147	.	.	.	.	1	PPM	LB/DAY
BETA-ENDOSULFAN (0115-29-7)			X	<0.0803	<0.0052268073	.	.	.	.	1	PPM	LB/DAY
ENDOSULFAN SULFATE (1031-07-8)			X	<0.0056	<0.0003645096	.	.	.	.	1	PPM	LB/DAY
ENDRIN (0072-20-8)			X	<0.0056	<0.0003645096	.	.	.	.	1	PPM	LB/DAY
ENDRIN ALDEHYDE (7421-93-4)			X	<0.065	<0.004230915	.	.	.	.	1	PPM	LB/DAY
HEPTACHLOR (0076-44-8)			X	<0.0043	<0.0002798913	.	.	.	.	1	PPM	LB/DAY

CONTINUED FROM PAGE V8

EPA I.D. NUMBER= VA0004090 OUTFALL 102

	MARK X TESTING REQUIRED	BELIEVED PRESENT	BELIEVED ABSENT	2. EFFLUENT A. MAXIMUM DAILY VALUE CONCENTRATION	A. MASS	B. MAXIMUM 30 DAY VALUE CONCENTRATION	B. MASS	C. LONG TERM AVRG. VALUE CONCENTRATION	C. MASS	NO. OF ANALYSES	3. UNITS CONCENTRATION	MASS
GCMS FRACTION - PESTICIDES (CONTINUED)												
HEPTACHLOR EPOXIDE (1025-57-3)	____	____	__X__	<0.0022	<0.0001432002	.	.	.	.	1	PPM	LB/DAY
PCB 1242 (53469219)	____	____	__X__	<0.05	<0.00325455	.	.	.	.	1	PPM	LB/DAY
PCB 1254 (11097691)	____	____	__X__	<0.036	<0.002343276	.	.	.	.	1	PPM	LB/DAY
PCB 1221 (11104282)	____	____	__X__	<0.03	<0.00195273	.	.	.	.	1	PPM	LB/DAY
PCB 1232 (11141165)	____	____	__X__	<0.05	<0.00325455	.	.	.	.	1	PPM	LB/DAY
PCB 1248 (12672296)	____	____	__X__	<0.05	<0.00325455	.	.	.	.	1	PPM	LB/DAY
PCB 1260 (11096825)	____	____	__X__	<0.05	<0.00325455	.	.	.	.	1	PPM	LB/DAY
PCB 1016 (12674112)	____	____	__X__	<0.05	<0.00325455	.	.	.	.	1	PPM	LB/DAY
TOXAPHENE (8001-35-2)	____	____	__X__	<0.05	<0.00325455	.	.	.	.	1	PPM	LB/DAY

EPA I.D. NUMBER= VA0004090

OUTFALL 103

V. INTAKE AND EFFLUENT CHARACTERISTICS (CONTINUED FROM PAGE 3 OF FORM 2C)

PART A- YOU MUST PROVIDE THE RESULTS OF AT LEAST ONE ANALYSIS FOR EVERY POLLUTANT IN THIS TABLE. COMPLETE ONE TABLE FOR EACH OUTFALL. SEE INSTRUCTIONS FOR ADDITIONAL DETAILS

	2. EFFLUENT							3. UNITS	
	A. MAXIMUM DAILY VALUE		B. MAXIMUM 30 DAY VALUE		C. LONG TERM AVRG. VALUE				
POLLUTANT	CONCENTRATION	MASS	CONCENTRATION	MASS	CONCENTRATION	MASS	NO. OF ANALYSES	CONCENTRATION	MASS
FLOW	.	.	0.0234	.	0.00853125	.	32	MGD	.
PH	.	.	6.78 (MIN)	7.72 (MAX)	N/A	N/A	32	STD. UNITS	.

PART B.

	MARK X		2. EFFLUENT						3. UNITS	
	BELIEVED PRESENT	BELIEVED ABSENT	A. MAXIMUM DAILY VALUE		B. MAXIMUM 30 DAY VALUE		C. LONG TERM AVRG. VALUE			
			CONCENTRATION	MASS	CONCENTRATION	MASS	CONCENTRATION	MASS	NO. OF ANALYSES	CONCENTRATION	MASS

ITEM V-B CONTINUED
PART C.

EPA I.D. NUMBER= VA0004090 OUTFALL 103

1. POLLUTANT	MARK X BELIEVED PRESENT	MARK X BELIEVED ABSENT	2. EFFLUENT A. MAXIMUM DAILY VALUE CONCENTRATION	A. MAXIMUM DAILY VALUE MASS	B. MAXIMUM 30 DAY VALUE CONCENTRATION	B. MAXIMUM 30 DAY VALUE MASS	C. LONG TERM AVRG. VALUE CONCENTRATION	C. LONG TERM AVRG. VALUE MASS	NO. OF ANALYSES	3. UNITS CONCENTRATION	3. UNITS MASS
POLLUTANT											
OIL & GREASE	____	____	.	.	<5	<0.9764	<5	<0.356	32	PPM	LB/DAY

EPA I.D. NUMBER= VA0004090 OUTFALL 104

V. INTAKE AND EFFLUENT CHARACTERISTICS (CONTINUED FROM PAGE 3 OF FORM 2C)

PART A- YOU MUST PROVIDE THE RESULTS OF AT LEAST ONE ANALYSIS FOR EVERY POLLUTANT IN THIS TABLE. COMPLETE ONE TABLE FOR EACH OUTFALL. SEE INSTRUCTIONS FOR ADDITIONAL DETAILS

POLLUTANT	2. EFFLUENT A. MAXIMUM DAILY VALUE CONCENTRATION	A. MAXIMUM DAILY VALUE MASS	B. MAXIMUM 30 DAY VALUE CONCENTRATION	B. MAXIMUM 30 DAY VALUE MASS	C. LONG TERM AVRG. VALUE CONCENTRATION	C. LONG TERM AVRG. VALUE MASS	NO. OF ANALYSES	3. UNITS CONCENTRATION	3. UNITS MASS
BIOCHEMICAL OXYGEN DEMAND	<2	<0.360504	.	.	.	.	1	PPM	LB/DAY
CHEMICAL OXYGEN DEMAND	<5	<0.90126	.	.	.	.	1	PPM	LB/DAY
TOTAL ORGANIC CARBON	1	0.180252	.	.	.	.	1	PPM	LB/DAY
TOTAL SUSPENDED SOLIDS	.	.	<1	<0.9013	<0.2207	<0.0677	29	PPM	LB/DAY
AMMONIA,TOTAL	0.11	0.01982772	.	.	.	.	1	PPM	LB/DAY
FLOW	.	.	0.216	.	0.027675	.	32	MGD	.
TEMPERATURE (SUMMER)	24	.	.	.	.	.	1	DEGREES C	.
PH	.	.	6.1 (MIN)	8.56 (MAX)	N/A	N/A	33	STD. UNITS	.

PART B.

	MARK X BELIEVED PRESENT	MARK X BELIEVED ABSENT	2. EFFLUENT A. MAXIMUM DAILY VALUE CONCENTRATION	A. MAXIMUM DAILY VALUE MASS	B. MAXIMUM 30 DAY VALUE CONCENTRATION	B. MAXIMUM 30 DAY VALUE MASS	C. LONG TERM AVRG. VALUE CONCENTRATION	C. LONG TERM AVRG. VALUE MASS	NO. OF ANALYSES	3. UNITS CONCENTRATION	3. UNITS MASS
BROMIDE,TOTAL (24959-67-6)	____	____	0.24	0.04326048	.	.	.	.	1	PPM	LB/DAY
CHLORINE, TOTAL RESIDUAL	____	__X__	NOT SAMPLED		NOT SAMPLED						
COLOR	____	____	10	N/A	.	.	.	.	1	NTU	.
FECAL COLIFORM	____	__X__	NOT SAMPLED		NOT SAMPLED						
FLUORIDE (16984-48-8)	____	____	7.998	1.441655496	.	.	.	.	1	PPM	LB/DAY
NITRATE + NITRITE	____	____	0.26	0.04686552	.	.	.	.	1	PPM	LB/DAY

CAS=. SITE=104 MONTH=8 YEAR=2000 PARAMTR=COLOR FLOW=0.0216 _FREQ_=1 SAMPLES=. MAXDAYLD=N/A MAXDAYCN=10 LTALOAD=. LTACONC=. MAX30LD=. MAX30CN=. ORDER=13 UNITSM=. UNITS=NTU INTAKEN INTAKEC= INTAKEMS= PAGE=V1 GROUP=POLLUTANT FIRST.SITE=0 LAST.SITE=0 FIRST.PAGE=0 LAST.PAGE=0 FIRST.GROUP=0 LAST.GROUP=0 _I_=. CHECK=0.28326048 I=. FILLIT= _ERROR_=0 _N_=503

ITEM V-B CONTINUED
PART C.

EPA I.D. NUMBER= VA0004090 OUTFALL 104

1. POLLUTANT	MARK X BELIEVED PRESENT	MARK X BELIEVED ABSENT	2. EFFLUENT A. MAXIMUM DAILY VALUE CONCENTRATION	A. MAXIMUM DAILY VALUE MASS	B. MAXIMUM 30 DAY VALUE CONCENTRATION	B. MAXIMUM 30 DAY VALUE MASS	C. LONG TERM AVRG. VALUE CONCENTRATION	C. LONG TERM AVRG. VALUE MASS	NO. OF ANALYSES	3. UNITS CONCENTRATION	3. UNITS MASS
POLLUTANT											
NITROGEN, TOTAL ORG. AS N	____	____	<0.01	<0.00180252	.	.	.	.	1	PPM	LB/DAY
OIL & GREASE	____	____	.	.	<5	<9.0126	<5	<1.1547	32	PPM	LB/DAY
PHOSPHORUS (AS P), TOTAL (7723-14-0)	____	____	1.59	0.28660068	.	.	.	.	1	PPM	LB/DAY
J. RADIOACTIVITY											
ALPHA, TOTAL	____	____	3	.	.	.	.	.	1	PPM	LB/DAY
BETA, TOTAL	____	____	11.5	.	.	.	.	.	1	PPM	LB/DAY
SULFATE (AS SO4)	____	____	14.95	2.6947674	.	.	.	.	1	PPM	LB/DAY
SULFIDE (AS S)	____	____	<0.01	<0.00180252	.	.	.	.	1	PPM	LB/DAY
SURFACTANTS	____	____	<0.025	<0.0045063	.	.	.	.	1	PPM	LB/DAY
ALUMINUM,TOTAL (7429-90-5)	____	____	0.2	0.0360504	.	.	.	.	1	PPM	LB/DAY
BARIUM,TOTAL (7440-39-3)	____	____	0.004	0.000721008	.	.	.	.	1	PPM	LB/DAY
BORON,TOTAL (7440-42-8)	____	____	1.32	0.23793264	.	.	.	.	1	PPM	LB/DAY
COBALT,TOTAL (7440-48-4)	____	____	<0.003	<0.000540756	.	.	.	.	1	PPM	LB/DAY
IRON,TOTAL (7439-89-6)	____	____	0.05	0.0090126	.	.	.	.	1	PPM	LB/DAY
MAGNESIUM,TOTAL (7439-95-4)	____	____	<0.01	<0.00180252	.	.	.	.	1	PPM	LB/DAY
MOLYBDENUM,TOTAL (7439-98-7)	____	____	0.006	0.001081512	.	.	.	.	1	PPM	LB/DAY
MANGANESE,TOTAL (7439-96-5)	____	____	<0.02	<0.00360504	.	.	.	.	1	PPM	LB/DAY
TIN,TOTAL (7440-31-5)	____	____	<0.005	<0.00090126	.	.	.	.	1	PPM	LB/DAY
TITANIUM,TOTAL (7440-32-6)	____	____	<0.01	<0.00180252	.	.	.	.	1	PPM	LB/DAY

CONTINUED FROM PAGE V2

EPA I.D. NUMBER= VA0004090 OUTFALL 104

1. POLLUTANT	MARK X TESTING REQUIRED	BELIEVED PRESENT	BELIEVED ABSENT	2. EFFLUENT A. MAXIMUM DAILY VALUE CONCENTRATION	A. MASS	B. MAXIMUM 30 DAY VALUE CONCENTRATION	B. MASS	C. LONG TERM AVRG. VALUE CONCENTRATION	C. MASS	NO. OF ANALYSES	3. UNITS CONCENTRATION	MASS
METALS, CYANIDE, AND TOTAL PHENOLS												
POLLUTANT												
ANTIMONY,TOTAL (7440-36-0)	X			<0.002	<0.000360504	.	.	.	.	1	PPM	LB/DAY
ARSENIC,TOTAL (7440-38-2)	X			<0.003	<0.000540756	.	.	.	.	1	PPM	LB/DAY
BERYLLIUM,TOTAL (7440-41-7)	X			<0.0002	<0.0000360504	.	.	.	.	1	PPM	LB/DAY
CADMIUM,TOTAL (7440-43-9)	X			<0.0003	<0.0000540756	.	.	.	.	1	PPM	LB/DAY
CHROMIUM,TOTAL (7440-47-3)	X			<0.001	<0.000180252	.	.	.	.	1	PPM	LB/DAY
COPPER,TOTAL (7440-50-8)	X			0.003	0.000540756	.	.	.	.	1	PPM	LB/DAY
LEAD,TOTAL (7439-92-1)	X			0.002	0.000360504	.	.	.	.	1	PPM	LB/DAY
MERCURY,TOTAL (7439-97-6)	X			<0.0002	<0.0000360504	.	.	.	.	1	PPM	LB/DAY
NICKEL,TOTAL (7440-02-0)	X			<0.005	<0.00090126	.	.	.	.	1	PPM	LB/DAY
SELENIUM,TOTAL (7782-49-2)	X			<0.003	<0.000540756	.	.	.	.	1	PPM	LB/DAY
SILVER,TOTAL (7440-22-4)	X			<0.0001	<0.0000180252	.	.	.	.	1	PPM	LB/DAY
THALLIUM,TOTAL (7440-28-0)	X			<0.002	<0.000360504	.	.	.	.	1	PPM	LB/DAY
ZINC,TOTAL (7440-66-6)	X			0.026	0.004686552	.	.	.	.	1	PPM	LB/DAY
CYANIDE , TOTAL (0057-12-5)	X			<0.01	<0.00180252	.	.	.	.	1	PPM	LB/DAY
PHENOLS , TOTAL	X			0.07	0.01261764	.	.	.	.	1	PPM	LB/DAY

CONTINUED FROM PAGE V3

EPA I.D. NUMBER= VA0004090 OUTFALL 104

	MARK X TESTING REQUIRED	BELIEVED PRESENT	BELIEVED ABSENT	2. EFFLUENT A. MAXIMUM DAILY VALUE CONCENTRATION	A. MAXIMUM DAILY VALUE MASS	B. MAXIMUM 30 DAY VALUE CONCENTRATION	B. MAXIMUM 30 DAY VALUE MASS	C. LONG TERM AVRG. VALUE CONCENTRATION	C. LONG TERM AVRG. VALUE MASS	NO. OF ANALYSES	3. UNITS CONCENTRATION	3. UNITS MASS
GCMS FRACTION - VOLATILE COMPOUNDS												
67663 (0067-66-3)	X		X	2.72	0.49028544	.	.	.	.	1	PPM	LB/DAY

EPA I.D. NUMBER= VA0004090

OUTFALL 105

V. INTAKE AND EFFLUENT CHARACTERISTICS (CONTINUED FROM PAGE 3 OF FORM 2C)

PART A- YOU MUST PROVIDE THE RESULTS OF AT LEAST ONE ANALYSIS FOR EVERY POLLUTANT IN THIS TABLE. COMPLETE ONE TABLE FOR EACH OUTFALL. SEE INSTRUCTIONS FOR ADDITIONAL DETAILS

	2. EFFLUENT							3. UNITS	
	A. MAXIMUM DAILY VALUE		B. MAXIMUM 30 DAY VALUE		C. LONG TERM AVRG. VALUE				
POLLUTANT	CONCENTRATION	MASS	CONCENTRATION	MASS	CONCENTRATION	MASS	NO. OF ANALYSES	CONCENTRATION	MASS
TOTAL SUSPENDED SOLIDS	.	.	<15.8	<2.135	<7.1826	<0.5744	23	PPM	LB/DAY
FLOW	.	.	0.0164	.	0.0069087	.	23	MGD	.
PH	.	.	6.27 (MIN)	8.88 (MAX)	N/A	N/A	25	STD. UNITS	.

PART B.

	MARK X		2. EFFLUENT						3. UNITS	
	BELIEVED PRESENT	BELIEVED ABSENT	A. MAXIMUM DAILY VALUE		B. MAXIMUM 30 DAY VALUE		C. LONG TERM AVRG. VALUE			
			CONCENTRATION	MASS	CONCENTRATION	MASS	CONCENTRATION	MASS	NO. OF ANALYSES	CONCENTRATION	MASS

ITEM V-B CONTINUED
PART C.

EPA I.D. NUMBER= VA0004090 OUTFALL 105

1. POLLUTANT	MARK X BELIEVED PRESENT	MARK X BELIEVED ABSENT	2. EFFLUENT A. MAXIMUM DAILY VALUE CONCENTRATION	A. MAXIMUM DAILY VALUE MASS	B. MAXIMUM 30 DAY VALUE CONCENTRATION	B. MAXIMUM 30 DAY VALUE MASS	C. LONG TERM AVRG. VALUE CONCENTRATION	C. LONG TERM AVRG. VALUE MASS	NO. OF ANALYSES	3. UNITS CONCENTRATION	3. UNITS MASS
POLLUTANT											
OIL & GREASE	____	____	.	.	<8	<1.0949	<5.12	<0.298	25	PPM	LB/DAY

EPA I.D. NUMBER= VA0004090

OUTFALL 106

V. INTAKE AND EFFLUENT CHARACTERISTICS (CONTINUED FROM PAGE 3 OF FORM 2C)

PART A- YOU MUST PROVIDE THE RESULTS OF AT LEAST ONE ANALYSIS FOR EVERY POLLUTANT IN THIS TABLE. COMPLETE ONE TABLE FOR EACH OUTFALL. SEE INSTRUCTIONS FOR ADDITIONAL DETAILS

	2. EFFLUENT							3. UNITS	
	A. MAXIMUM DAILY VALUE		B. MAXIMUM 30 DAY VALUE		C. LONG TERM AVRG. VALUE				
POLLUTANT	CONCENTRATION	MASS	CONCENTRATION	MASS	CONCENTRATION	MASS	NO. OF ANALYSES	CONCENTRATION	MASS
FLOW	.	.	0.0234	.	0.008775	.	32	MGD	.
PH	.	.	6.59 (MIN)	7.77 (MAX)	N/A	N/A	32	STD. UNITS	.

PART B.

	MARK X		2. EFFLUENT						3. UNITS	
			A. MAXIMUM DAILY VALUE		B. MAXIMUM 30 DAY VALUE		C. LONG TERM AVRG. VALUE			
	BELIEVED PRESENT	BELIEVED ABSENT	CONCENTRATION	MASS	CONCENTRATION	MASS	CONCENTRATION	MASS	NO. OF ANALYSES	CONCENTRATION	MASS

ITEM V-B CONTINUED
PART C.

EPA I.D. NUMBER= VA0004090 OUTFALL 106

1. POLLUTANT	MARK X BELIEVED PRESENT	MARK X BELIEVED ABSENT	2. EFFLUENT A. MAXIMUM DAILY VALUE CONCENTRATION	A. MAXIMUM DAILY VALUE MASS	B. MAXIMUM 30 DAY VALUE CONCENTRATION	B. MAXIMUM 30 DAY VALUE MASS	C. LONG TERM AVRG. VALUE CONCENTRATION	C. LONG TERM AVRG. VALUE MASS	NO. OF ANALYSES	3. UNITS CONCENTRATION	3. UNITS MASS
POLLUTANT											
OIL & GREASE	____	____	.	.	<5	<0.9764	<5	<0.3661	32	PPM	LB/DAY

EPA I.D. NUMBER= VA0004090

V. INTAKE AND EFFLUENT CHARACTERISTICS (CONTINUED FROM PAGE 3 OF FORM 2C) OUTFALL 107

PART A- YOU MUST PROVIDE THE RESULTS OF AT LEAST ONE ANALYSIS FOR EVERY POLLUTANT IN THIS TABLE. COMPLETE ONE TABLE FOR EACH OUTFALL. SEE INSTRUCTIONS FOR ADDITIONAL DETAILS

	2. EFFLUENT							3. UNITS	
	A. MAXIMUM DAILY VALUE		B. MAXIMUM 30 DAY VALUE		C. LONG TERM AVRG. VALUE				
POLLUTANT	CONCENTRATION	MASS	CONCENTRATION	MASS	CONCENTRATION	MASS	NO. OF ANALYSES	CONCENTRATION	MASS
BIOCHEMICAL OXYGEN DEMAND	2.85	0.073728075	.	.	.	.	1	PPM	LB/DAY
CHEMICAL OXYGEN DEMAND	<5	<0.1293475	.	.	.	.	1	PPM	LB/DAY
TOTAL ORGANIC CARBON	9.3	0.24058635	.	.	.	.	1	PPM	LB/DAY
TOTAL SUSPENDED SOLIDS	.	.	<10.4	<0.269	<3.64	<0.0942	5	PPM	LB/DAY
AMMONIA,TOTAL	0.4	0.0103478	.	.	.	.	1	PPM	LB/DAY
FLOW	.	.	0.0031	.	0.0031	.	4	MGD	.
PH	.	.	7.35 (MIN)	10.12 (MAX)	N/A	N/A	4	STD. UNITS	.

PART B.

	MARK X		2. EFFLUENT						3. UNITS	
			A. MAXIMUM DAILY VALUE		B. MAXIMUM 30 DAY VALUE		C. LONG TERM AVRG. VALUE			
	BELIEVED PRESENT	BELIEVED ABSENT	CONCENTRATION	MASS	CONCENTRATION	MASS	CONCENTRATION	MASS	NO. OF ANALYSES	CONCENTRATION	MASS
BROMIDE,TOTAL (24959-67-6)	____	____	<0.2	<0.0051739	.	.	.	.	1	PPM	LB/DAY
CHLORINE, TOTAL RESIDUAL	____	__X__	NOT SAMPLED		NOT SAMPLED						

CAS=. SITE=107 MONTH=10 YEAR=2000 PARAMTR=COLOR FLOW=. _FREQ_=1 SAMPLES=. MAXDAYLD=N/A MAXDAYCN=50 LTALOAD=. LTACONC=. MAX30LD=. MAX30CN=. ORDER=13 UNITSM=. UNITS=NTU INTAKEN=.
INTAKEC= INTAKEMS= PAGE=V1 GROUP=POLLUTANT FIRST.SITE=0 LAST.SITE=0 FIRST.PAGE=0 LAST.PAGE=0 FIRST.GROUP=0 LAST.GROUP=0 _I_=. CHECK=0.2051739 I=. FILLIT= _ERROR_=0 _N_=555

COLOR	____	____	50	N/A	.	.	.	.	1	NTU	.
FECAL COLIFORM	____	__X__	NOT SAMPLED		NOT SAMPLED						
FLUORIDE (16984-48-8)	____	____	0.223	0.0057688985	.	.	.	.	1	PPM	LB/DAY
NITRATE + NITRITE	____	____	<0.01	<0.000258695	.	.	.	.	1	PPM	LB/DAY

ITEM V-B CONTINUED EPA I.D. NUMBER= VA0004090 OUTFALL 107
PART C.

1. POLLUTANT	MARK X BELIEVED PRESENT	MARK X BELIEVED ABSENT	2. EFFLUENT A. MAXIMUM DAILY VALUE CONCENTRATION	A. MAXIMUM DAILY VALUE MASS	B. MAXIMUM 30 DAY VALUE CONCENTRATION	B. MAXIMUM 30 DAY VALUE MASS	C. LONG TERM AVRG. VALUE CONCENTRATION	C. LONG TERM AVRG. VALUE MASS	NO. OF ANALYSES	3. UNITS CONCENTRATION	3. UNITS MASS
POLLUTANT											
NITROGEN, TOTAL ORG. AS N	____	____	0.78	0.02017821	.	.	.	.	1	PPM	LB/DAY
OIL & GREASE	____	____	.	.	<5	<0.1293	<5	<0.1293	5	PPM	LB/DAY
PHOSPHORUS (AS P), TOTAL (7723-14-0)	____	____	0.05	0.001293475	.	.	.	.	1	PPM	LB/DAY
J. RADIOACTIVITY											
ALPHA, TOTAL	____	____	<0.3	.	.	.	.	.	1	PPM	LB/DAY
BETA, TOTAL	____	____	1	.	.	.	.	.	1	PPM	LB/DAY
SULFATE (AS SO4)	____	____	0.35	0.009054325	.	.	.	.	1	PPM	LB/DAY
SULFIDE (AS S)	____	____	<0.01	<0.000258695	.	.	.	.	1	PPM	LB/DAY
SURFACTANTS	____	____	<0.025	<0.0006467375	.	.	.	.	1	PPM	LB/DAY
ALUMINUM,TOTAL (7429-90-5)	____	____	<0.2	<0.0051739	.	.	.	.	1	PPM	LB/DAY
BARIUM,TOTAL (7440-39-3)	____	____	0.013	0.0003363035	.	.	.	.	1	PPM	LB/DAY
BORON,TOTAL (7440-42-8)	____	____	0.02	0.00051739	.	.	.	.	1	PPM	LB/DAY
COBALT,TOTAL (7440-48-4)	____	____	<0.003	<0.0000776085	.	.	.	.	1	PPM	LB/DAY
IRON,TOTAL (7439-89-6)	____	____	8.57	0.221701615	.	.	.	.	1	PPM	LB/DAY
MAGNESIUM,TOTAL (7439-95-4)	____	____	0.02	0.00051739	.	.	.	.	1	PPM	LB/DAY
MOLYBDENUM,TOTAL (7439-98-7)	____	____	0.001	0.0000258695	.	.	.	.	1	PPM	LB/DAY
MANGANESE,TOTAL (7439-96-5)	____	____	0.13	0.003363035	.	.	.	.	1	PPM	LB/DAY
TIN,TOTAL (7440-31-5)	____	____	<0.005	<0.0001293475	.	.	.	.	1	PPM	LB/DAY
TITANIUM,TOTAL (7440-32-6)	____	____	<0.01	<0.000258695	.	.	.	.	1	PPM	LB/DAY

CONTINUED FROM PAGE V2

EPA I.D. NUMBER= VA0004090 OUTFALL 107

1. POLLUTANT	MARK X TESTING REQUIRED	BELIEVED PRESENT	BELIEVED ABSENT	2. EFFLUENT A. MAXIMUM DAILY VALUE CONCENTRATION	A. MAXIMUM DAILY VALUE MASS	B. MAXIMUM 30 DAY VALUE CONCENTRATION	B. MAXIMUM 30 DAY VALUE MASS	C. LONG TERM AVRG. VALUE CONCENTRATION	C. LONG TERM AVRG. VALUE MASS	NO. OF ANALYSES	3. UNITS CONCENTRATION	3. UNITS MASS
METALS, CYANIDE, AND TOTAL PHENOLS												
POLLUTANT												
ANTIMONY,TOTAL (7440-36-0)	X			<0.002	<0.000051739	.	.	.	.	1	PPM	LB/DAY
ARSENIC,TOTAL (7440-38-2)	X			<0.003	<0.0000776085	.	.	.	.	1	PPM	LB/DAY
BERYLLIUM,TOTAL (7440-41-7)	X			<0.0002	<5.1739E-6	.	.	.	.	1	PPM	LB/DAY
CADMIUM,TOTAL (7440-43-9)	X			<0.0003	<7.76085E-6	.	.	.	.	1	PPM	LB/DAY
CHROMIUM,TOTAL (7440-47-3)	X			<0.001	<0.0000258695	.	.	.	.	1	PPM	LB/DAY
COPPER,TOTAL (7440-50-8)	X			0.557	0.0144093115	.	.	.	.	1	PPM	LB/DAY
LEAD,TOTAL (7439-92-1)	X			0.005	0.0001293475	.	.	.	.	1	PPM	LB/DAY
MERCURY,TOTAL (7439-97-6)	X			<0.0002	<5.1739E-6	.	.	.	.	1	PPM	LB/DAY
NICKEL,TOTAL (7440-02-0)	X			0.007	0.0001810865	.	.	.	.	1	PPM	LB/DAY
SELENIUM,TOTAL (7782-49-2)	X			<0.003	<0.0000776085	.	.	.	.	1	PPM	LB/DAY
SILVER,TOTAL (7440-22-4)	X			<0.0001	<2.58695E-6	.	.	.	.	1	PPM	LB/DAY
THALLIUM,TOTAL (7440-28-0)	X			<0.002	<0.000051739	.	.	.	.	1	PPM	LB/DAY
ZINC,TOTAL (7440-66-6)	X			0.06	0.00155217	.	.	.	.	1	PPM	LB/DAY
CYANIDE , TOTAL (0057-12-5)	X			<0.01	<0.000258695	.	.	.	.	1	PPM	LB/DAY
PHENOLS , TOTAL	X			0.01	0.000258695	.	.	.	.	1	PPM	LB/DAY

CONTINUED FROM PAGE V3

EPA I.D. NUMBER= VA0004090 OUTFALL 107

	MARK X TESTING REQUIRED	BELIEVED PRESENT	BELIEVED ABSENT	2. EFFLUENT A. MAXIMUM DAILY VALUE CONCENTRATION	A. MASS	B. MAXIMUM 30 DAY VALUE CONCENTRATION	B. MASS	C. LONG TERM AVRG. VALUE CONCENTRATION	C. MASS	NO. OF ANALYSES	3. UNITS CONCENTRATION	MASS
GCMS FRACTION - VOLATILE COMPOUNDS												
ACROLEIN (0107-02-8)	X		X	<0.0408	<0.0010554756	.	.	.	.	1	PPM	LB/DAY
ACRYLONITRILE (0107-13-1)	X		X	<0.0015	<0.0000388043	.	.	.	.	1	PPM	LB/DAY
BENZENE (0071-43-2)	X		X	<0.0044	<0.0001138258	.	.	.	.	1	PPM	LB/DAY
BIS (CHLOROMETHYL) ETHER (542-88-1)				NOT SAMPLED		NOT SAMPLED		NOT SAMPLED				
BROMOFORM (0075-25-2)	X		X	<0.0047	<0.0001215866	.	.	.	.	1	PPM	LB/DAY
CARBON TETRACHLORIDE (0056-23-5)	X		X	<0.0028	<0.0000724346	.	.	.	.	1	PPM	LB/DAY
CHLOROBENZENE (0108-90-7)	X		X	<0.006	<0.000155217	.	.	.	.	1	PPM	LB/DAY
DIBROMOCHLOROMETHANE (0124-48-1)	X		X	<0.0031	<0.0000801955	.	.	.	.	1	PPM	LB/DAY
CHLOROETHANE (0075-00-3)	X		X	<0.0011	<0.0000284564	.	.	.	.	1	PPM	LB/DAY
2-CHLOROETHYLVINYL ETHER (0110-75-8)	X		X	<0.0012	<0.0000310434	.	.	.	.	1	PPM	LB/DAY
CHLOROFORM (0067-66-3)	X		X	<0.0016	<0.0000413912	.	.	.	.	1	PPM	LB/DAY
BROMODICHLOROMETHANE (0075-27-4)	X		X	<0.0022	<0.0000569129	.	.	.	.	1	PPM	LB/DAY
1,1-DICHLOROETHANE (0075-34-3)	X		X	<0.0047	<0.0001215866	.	.	.	.	1	PPM	LB/DAY
1,2-DICHLOROETHANE (0107-06-2)	X		X	<0.0028	<0.0000724346	.	.	.	.	1	PPM	LB/DAY
1,1-DICHLOROETHENE (0075-35-4)	X		X	<0.0028	<0.0000724346	.	.	.	.	1	PPM	LB/DAY
1,2-DICHLOROPROPANE (0078-87-5)	X		X	<0.006	<0.000155217	.	.	.	.	1	PPM	LB/DAY
TRANS-1,3-DICHLOROPROPENE (10061026)	X		X	<0.0009	<0.0000232825	.	.	.	.	1	PPM	LB/DAY
ETHYL BENZENE (0100-41-4)	X		X	<0.0072	<0.0001862604	.	.	.	.	1	PPM	LB/DAY
BROMOMETHANE (0074-83-9)	X		X	<0.0014	<0.0000362173	.	.	.	.	1	PPM	LB/DAY
CHLOROMETHANE (0074-87-3)	X		X	<0.0011	<0.0000284564	.	.	.	.	1	PPM	LB/DAY

CONTINUED FROM PAGE V4

EPA I.D. NUMBER= VA0004090 OUTFALL 107

	MARK X TESTING REQUIRED	BELIEVED PRESENT	BELIEVED ABSENT	2. EFFLUENT A. MAXIMUM DAILY VALUE CONCENTRATION	A. MASS	B. MAXIMUM 30 DAY VALUE CONCENTRATION	B. MASS	C. LONG TERM AVRG. VALUE CONCENTRATION	C. MASS	NO. OF ANALYSES	3. UNITS CONCENTRATION	MASS
GCMS FRACTION - VOLATILE COMPOUNDS (CONT												
METHYLENE CHLORIDE (0075-09-2)	X		X	<0.0028	<0.0000724346	.	.	.	.	1	PPM	LB/DAY
1,1,2,2-TETRACHLOROETHANE (0079-34-5)	X		X	<0.0069	<0.0001784996	.	.	.	.	1	PPM	LB/DAY
TETRACHLOROETHENE (0127-18-4)	X		X	<0.0041	<0.000106065	.	.	.	.	1	PPM	LB/DAY
TOLUENE (0108-88-3)	X		X	<0.006	<0.000155217	.	.	.	.	1	PPM	LB/DAY
1 2-TRANS-DICHLOROETHYLENE (0156-60-5)	X		X	<0.0016	<0.0000413912	.	.	.	.	1	PPM	LB/DAY
1,1,1-TRICHLOROETHANE (0071-55-6)	X		X	<0.0038	<0.0000983041	.	.	.	.	1	PPM	LB/DAY
1,1,2-TRICHLOROETHANE (0079-00-5)	X		X	<0.005	<0.0001293475	.	.	.	.	1	PPM	LB/DAY
TRICHLOROETHENE (0079-01-6)	X		X	<0.0019	<0.0000491521	.	.	.	.	1	PPM	LB/DAY
TRICHLOROFLUOROMETHANE (75-69-4)				NOT SAMPLED		NOT SAMPLED		NOT SAMPLED				
VINYL CHLORIDE (0075-01-4)	X		X	<0.0018	<0.0000465651	.	.	.	.	1	PPM	LB/DAY
GCMS FRACTION - ACID COMPOUNDS												
2-CHLOROPHENOL (0095-57-8)	X		X	<0.0033	<0.0000853694	.	.	.	.	1	PPM	LB/DAY
2,4-DICHLOROPHENOL (0120-83-2)	X		X	<0.0056	<0.0001448692	.	.	.	.	1	PPM	LB/DAY
2,4-DIMETHYLPHENOL (0105-67-9)	X		X	<0.0052	<0.0001345214	.	.	.	.	1	PPM	LB/DAY
4,6-DINITRO-2-METHYLPHENOL (0534-52-1)	X		X	<0.024	<0.000620868	.	.	.	.	1	PPM	LB/DAY
2,4-DINITROPHENOL (0051-28-5)	X		X	<0.042	<0.001086519	.	.	.	.	1	PPM	LB/DAY
2-NITROPHENOL (0088-75-5)	X		X	<0.0036	<0.0000931302	.	.	.	.	1	PPM	LB/DAY
4-NITROPHENOL (0100-02-7)	X		X	<0.0024	<0.0000620868	.	.	.	.	1	PPM	LB/DAY
4-CHLORO-3-METHYLPHENOL (0059-50-7)	X		X	<0.0075	<0.0001940213	.	.	.	.	1	PPM	LB/DAY
PENTACHLOROPHENOL (0087-86-5)	X		X	<0.0036	<0.0000931302	.	.	.	.	1	PPM	LB/DAY
PHENOL (0108-95-2)	X		X	<0.0027	<0.0000698477	.	.	.	.	1	PPM	LB/DAY
2,4,6-TRICHLOROPHENOL (0088-06-2)	X		X	<0.0027	<0.0000698477	.	.	.	.	1	PPM	LB/DAY

CONTINUED FROM PAGE V5

EPA I.D. NUMBER= VA0004090 OUTFALL 107

	MARK X TESTING REQUIRED	BELIEVED PRESENT	BELIEVED ABSENT	2. EFFLUENT A. MAXIMUM DAILY VALUE CONCENTRATION	A. MASS	B. MAXIMUM 30 DAY VALUE CONCENTRATION	B. MASS	C. LONG TERM AVRG. VALUE CONCENTRATION	C. MASS	NO. OF ANALYSES	3. UNITS CONCENTRATION	MASS
GCMS FRACTION - BASE/NEUTRAL COMPOUNDS												
ACENAPHTHENE (0083-32-9)	X		X	<0.003	<0.0000776085	.	.	.	.	1	PPM	LB/DAY
ACENAPHTHYLENE (0208-96-8)	X		X	<0.0035	<0.0000905433	.	.	.	.	1	PPM	LB/DAY
ANTHRACENE (0120-12-7)	X		X	<0.0019	<0.0000491521	.	.	.	.	1	PPM	LB/DAY
BENZIDINE (0092-87-5)	X		X	<0.063	<0.0016297785	.	.	.	.	1	PPM	LB/DAY
BENZO(A)ANTHRACENE (0056-55-3)	X		X	<0.0165	<0.0004268467	.	.	.	.	1	PPM	LB/DAY
BENZO(A)PYRENE (0050-32-8)	X		X	<0.0025	<0.0000646738	.	.	.	.	1	PPM	LB/DAY
BENZO(B)FLUORANTHENE (0205-99-2)	X		X	<0.0048	<0.0001241736	.	.	.	.	1	PPM	LB/DAY
BENZO(G H I)PERYLENE (0191-24-2)	X		X	<0.0041	<0.000106065	.	.	.	.	1	PPM	LB/DAY
BENZO(K)FLUORANTHENE (0207-08-9)	X		X	<0.0025	<0.0000646738	.	.	.	.	1	PPM	LB/DAY
BIS(2-CHLOROETHOXY)METHANE (0111-91-1)	X		X	<0.0053	<0.0001371083	.	.	.	.	1	PPM	LB/DAY
BIS(-2-CHLOROETHYL)ETHER (0111-44-4)	X		X	<0.0057	<0.0001474561	.	.	.	.	1	PPM	LB/DAY
BIS(2-CHLOROISOPROPYL)ETHER (102-60-1)				NOT SAMPLED		NOT SAMPLED		NOT SAMPLED				
BIS(2-ETHYLHEXYL)PHTHALATE (0117-81-7)	X		X	<0.0025	<0.0000646738	.	.	.	.	1	PPM	LB/DAY
4-BROMOPHENYL-PHENYLETHER (0101-55-3)	X		X	<0.003	<0.0000776085	.	.	.	.	1	PPM	LB/DAY
BUTYLBENZYLPHTHALATE (0085-68-7)	X		X	<0.0025	<0.0000646738	.	.	.	.	1	PPM	LB/DAY
2-CHLORONAPTHALENE (0091-58-7)	X		X	<0.0046	<0.0001189997	.	.	.	.	1	PPM	LB/DAY
4-CHLOROPHENYL-PHENYLETHER (7005-72-3)	X		X	<0.0042	<0.0001086519	.	.	.	.	1	PPM	LB/DAY
CHRYSENE (0218-01-9)	X		X	<0.0025	<0.0000646738	.	.	.	.	1	PPM	LB/DAY
DIBENZO(A H)ANTHRANCENE (0053-70-3)	X		X	<0.0025	<0.0000646738	.	.	.	.	1	PPM	LB/DAY
1,2-DICHLOROBENZENE (0095-50-1)	X		X	<0.004	<0.000103478	.	.	.	.	1	PPM	LB/DAY
1,3-DICHLOROBENZENE (0541-73-1)	X		X	<0.0031	<0.0000801955	.	.	.	.	1	PPM	LB/DAY

CONTINUED FROM PAGE V6

EPA I.D. NUMBER= VA0004090 OUTFALL 107

	MARK X TESTING REQUIRED	BELIEVED PRESENT	BELIEVED ABSENT	2. EFFLUENT A. MAXIMUM DAILY VALUE CONCENTRATION	A. MASS	B. MAXIMUM 30 DAY VALUE CONCENTRATION	B. MASS	C. LONG TERM AVRG. VALUE CONCENTRATION	C. MASS	NO. OF ANALYSES	3. UNITS CONCENTRATION	MASS
GCMS FRACTION - BASE/NEUTRAL COMP.(CONT)												
1,4-DICHLOROBENZENE (0106-46-7)	X		X	<0.0044	<0.0001138258	.	.	.	.	1	PPM	LB/DAY
3,3PR-DICHLOROBENZIDINE (0091-94-1)	X		X	<0.0078	<0.0002017821	.	.	.	.	1	PPM	LB/DAY
DIETHYLPHTHALATE (0084-66-2)	X		X	<0.0074	<0.0001914343	.	.	.	.	1	PPM	LB/DAY
DIMETHYL PHTHALATE (0131-11-3)	X		X	<0.0075	<0.0001940213	.	.	.	.	1	PPM	LB/DAY
DI-N-BUTYLPHTHALATE (0084-74-2)	X		X	<0.0064	<0.0001655648	.	.	.	.	1	PPM	LB/DAY
2,4-DINITROTOLUENE (0121-14-2)	X		X	<0.0057	<0.0001474561	.	.	.	.	1	PPM	LB/DAY
2,6-DINITROTOLUENE (0606-20-2)	X		X	<0.0034	<0.0000879563	.	.	.	.	1	PPM	LB/DAY
DI-N-OCTYLPHTHALATE (0117-84-0)	X		X	<0.0025	<0.0000646738	.	.	.	.	1	PPM	LB/DAY
1,2-DIPHENYLHYDRAZINE (0122-66-7)	X		X	<0.0088	<0.0002276516	.	.	.	.	1	PPM	LB/DAY
FLUORANTHENE (0206-44-0)	X		X	<0.0022	<0.0000569129	.	.	.	.	1	PPM	LB/DAY
FLUORENE (0086-73-7)	X		X	<0.0022	<0.0000569129	.	.	.	.	1	PPM	LB/DAY
HEXACHLOROBENZENE (0118-74-1)	X		X	<0.0031	<0.0000801955	.	.	.	.	1	PPM	LB/DAY
HEXACHLOROBUTADIENE (0087-68-3)	X		X	<0.0018	<0.0000465651	.	.	.	.	1	PPM	LB/DAY
HEXACHLOROCYCLOPENTADIENE (0077-47-4)	X		X	<0.02	<0.00051739	.	.	.	.	1	PPM	LB/DAY
HEXACHLOROETHANE (0067-72-1)	X		X	<0.0024	<0.0000620868	.	.	.	.	1	PPM	LB/DAY
INDENO(1,2,3-CD)PYRENE (0193-39-5)	X		X	<0.0037	<0.0000957172	.	.	.	.	1	PPM	LB/DAY
ISOPHORONE (0078-59-1)	X		X	<0.0051	<0.0001319344	.	.	.	.	1	PPM	LB/DAY
NAPHTHALENE (0091-20-3)	X		X	<0.0038	<0.0000983041	.	.	.	.	1	PPM	LB/DAY
NITROBENZENE (0098-95-3)	X		X	<0.0042	<0.0001086519	.	.	.	.	1	PPM	LB/DAY
N,NITROSODIMETHYLAMINE (0062-75-9)	X		X	<0.0062	<0.0001603909	.	.	.	.	1	PPM	LB/DAY
N-NITROSO-DI-N-PROPYLAMINE (0621-64-7)	X		X	<0.0036	<0.0000931302	.	.	.	.	1	PPM	LB/DAY

CONTINUED FROM PAGE V7

EPA I.D. NUMBER= VA0004090 OUTFALL 107

	MARK X TESTING REQUIRED	BELIEVED PRESENT	BELIEVED ABSENT	2. EFFLUENT A. MAXIMUM DAILY VALUE CONCENTRATION	A. MASS	B. MAXIMUM 30 DAY VALUE CONCENTRATION	B. MASS	C. LONG TERM AVRG. VALUE CONCENTRATION	C. MASS	NO. OF ANALYSES	3. UNITS CONCENTRATION	MASS
GCMS FRACTION - BASE/NEUTRAL COMP (CONT)												
N-NITROSODIPHENYLAMINE (0086-30-6)	__X__	_____	__X__	<0.0027	<0.0000698477	.	.	.	.	1	PPM	LB/DAY
PHENANTHRENE (0085-01-8)	__X__	_____	__X__	<0.0054	<0.0001396953	.	.	.	.	1	PPM	LB/DAY
PYRENE (0129-00-0)	__X__	_____	__X__	<0.0038	<0.0000983041	.	.	.	.	1	PPM	LB/DAY
1,2,4-TRICHLORBENZENE (0120-82-1)	__X__	_____	__X__	<0.0079	<0.0002043691	.	.	.	.	1	PPM	LB/DAY

CONTINUED FROM PAGE V8

EPA I.D. NUMBER= VA0004090 OUTFALL 107

	MARK X TESTING REQUIRED	BELIEVED PRESENT	BELIEVED ABSENT	2. EFFLUENT A. MAXIMUM DAILY VALUE CONCENTRATION	A. MASS	B. MAXIMUM 30 DAY VALUE CONCENTRATION	B. MASS	C. LONG TERM AVRG. VALUE CONCENTRATION	C. MASS	NO. OF ANALYSES	3. UNITS CONCENTRATION	MASS
GCMS FRACTION - PESTICIDES (CONTINUED)												
PCB 1242 (53469219)	____	____	__X__	<0.05	<0.001293475	.	.	.	.	1	PPM	LB/DAY
PCB 1254 (11097691)	____	____	__X__	<0.036	<0.000931302	.	.	.	.	1	PPM	LB/DAY
PCB 1221 (11104282)	____	____	__X__	<0.03	<0.000776085	.	.	.	.	1	PPM	LB/DAY
PCB 1232 (11141165)	____	____	__X__	<0.05	<0.001293475	.	.	.	.	1	PPM	LB/DAY
PCB 1248 (12672296)	____	____	__X__	<0.05	<0.001293475	.	.	.	.	1	PPM	LB/DAY
PCB 1260 (11096825)	____	____	__X__	<0.05	<0.001293475	.	.	.	.	1	PPM	LB/DAY
PCB 1016 (12674112)	____	____	__X__	<0.05	<0.001293475	.	.	.	.	1	PPM	LB/DAY

EPA I.D. NUMBER= VA0004090 OUTFALL 108

V. INTAKE AND EFFLUENT CHARACTERISTICS (CONTINUED FROM PAGE 3 OF FORM 2C)

PART A- YOU MUST PROVIDE THE RESULTS OF AT LEAST ONE ANALYSIS FOR EVERY POLLUTANT IN THIS TABLE. COMPLETE ONE TABLE FOR EACH OUTFALL. SEE INSTRUCTIONS FOR ADDITIONAL DETAILS

POLLUTANT	2. EFFLUENT A. MAXIMUM DAILY VALUE CONCENTRATION	A. MAXIMUM DAILY VALUE MASS	B. MAXIMUM 30 DAY VALUE CONCENTRATION	B. MAXIMUM 30 DAY VALUE MASS	C. LONG TERM AVRG. VALUE CONCENTRATION	C. LONG TERM AVRG. VALUE MASS	NO. OF ANALYSES	3. UNITS CONCENTRATION	3. UNITS MASS
BIOCHEMICAL OXYGEN DEMAND	.	.	13.1	3.7497	13.1	3.7497	4	PPM	LB/DAY
CHEMICAL OXYGEN DEMAND	.	.	47	13.453	47	13.453	4	PPM	LB/DAY
TOTAL SUSPENDED SOLIDS	.	.	11.5	3.705	6.9274	1.4214	62	PPM	LB/DAY
AMMONIA,TOTAL	.	.	94.4675	27.0398	94.4675	27.0398	4	PPM	LB/DAY
FLOW	.	.	0.0562	.	0.02445312	.	32	MGD	.
TEMPERATURE (SUMMER)	.	.	26.97	.	26.97	.	4	DEGREES C	.
PH	.	.	6.67 (MIN)	7.7 (MAX)	N/A	N/A	66	STD. UNITS	.

PART B.

	MARK X BELIEVED PRESENT	MARK X BELIEVED ABSENT	2. EFFLUENT A. MAXIMUM DAILY VALUE CONCENTRATION	A. MAXIMUM DAILY VALUE MASS	B. MAXIMUM 30 DAY VALUE CONCENTRATION	B. MAXIMUM 30 DAY VALUE MASS	C. LONG TERM AVRG. VALUE CONCENTRATION	C. LONG TERM AVRG. VALUE MASS	NO. OF ANALYSES	3. UNITS CONCENTRATION	3. UNITS MASS
BROMIDE,TOTAL (24959-67-6)	____	____	.	.	<0.21	<0.0601	<0.21	<0.0601	4	PPM	LB/DAY
CHLORINE, TOTAL RESIDUAL	____	__X__	NOT SAMPLED		NOT SAMPLED						
COLOR	____	____	.	.	350	N/A	350	N/A	4	NTU	.
FECAL COLIFORM	____	__X__	NOT SAMPLED		NOT SAMPLED						
FLUORIDE (16984-48-8)	____	____	.	.	0.7012	0.2007	0.7012	0.2007	4	PPM	LB/DAY
NITRATE + NITRITE	____	____	.	.	0.075	0.0215	0.075	0.0215	4	PPM	LB/DAY

CAS=. SITE=108 MONTH=. YEAR=. PARAMTR=COLOR FLOW=. _FREQ_=4 SAMPLES=. MAXDAYLD=. MAXDAYCN=. LTALOAD=N/A LTACONC=350 MAX30LD=N/A MAX30CN=350 ORDER=13 UNITSM=. UNITS=NTU INTAKEN=. INTAKEC= INTAKEMS= PAGE=V1 GROUP=POLLUTANT FIRST.SITE=0 LAST.SITE=0 FIRST.PAGE=0 LAST.PAGE=0 FIRST.GROUP=0 LAST.GROUP=0 _I_=. CHECK=0.5402 I=. FILLIT= _ERROR_=0 _N_=690

ITEM V-B CONTINUED
PART C.

EPA I.D. NUMBER= VA0004090 OUTFALL 108

1. POLLUTANT	MARK X BELIEVED PRESENT	MARK X BELIEVED ABSENT	2. EFFLUENT A. MAXIMUM DAILY VALUE CONCENTRATION	A. MAXIMUM DAILY VALUE MASS	B. MAXIMUM 30 DAY VALUE CONCENTRATION	B. MAXIMUM 30 DAY VALUE MASS	C. LONG TERM AVRG. VALUE CONCENTRATION	C. LONG TERM AVRG. VALUE MASS	NO. OF ANALYSES	3. UNITS CONCENTRATION	3. UNITS MASS
POLLUTANT											
NITROGEN, TOTAL ORG. AS N	___	___	.	.	70.445	20.1637	70.445	20.1637	4	PPM	LB/DAY
OIL & GREASE	___	___	.	.	<5	<2.3449	<5	<1.0245	63	PPM	LB/DAY
PHOSPHORUS (AS P), TOTAL (7723-14-0)	___	___	.	.	0.1425	0.0408	0.1425	0.0408	4	PPM	LB/DAY
J. RADIOACTIVITY											
ALPHA, TOTAL	___	___	.	.	<4.4	.	<4.4	.	4	PPM	LB/DAY
BETA, TOTAL	___	___	.	.	<4.025	.	<4.025	.	4	PPM	LB/DAY
RADIUM,TOTAL	___	___	.	.	<0.675	<0.1932	<0.675	<0.1932	4	PPM	LB/DAY
RADIUM 226 , TOTAL	___	___	.	.	0.425	0.1216	0.425	0.1216	4	PPM	LB/DAY
SULFATE (AS SO4)	___	___	.	.	1127.22	322.6481	1127.22	322.6481	4	PPM	LB/DAY
SULFIDE (AS S)	___	___	.	.	0.03	0.0086	0.03	0.0086	4	PPM	LB/DAY
SURFACTANTS	___	___	.	.	<0.025	<0.0072	<0.025	<0.0072	4	PPM	LB/DAY
ALUMINUM,TOTAL (7429-90-5)	___	___	.	.	<0.2	<0.0572	<0.2	<0.0572	4	PPM	LB/DAY
BARIUM,TOTAL (7440-39-3)	___	___	.	.	0.0148	0.0042	0.0148	0.0042	4	PPM	LB/DAY
BORON,TOTAL (7440-42-8)	___	___	.	.	<0.0225	<0.0064	<0.0225	<0.0064	4	PPM	LB/DAY
COBALT,TOTAL (7440-48-4)	___	___	.	.	<0.003	<0.0009	<0.003	<0.0009	4	PPM	LB/DAY
IRON,TOTAL (7439-89-6)	___	___	.	.	0.24	0.0687	0.24	0.0687	4	PPM	LB/DAY
MAGNESIUM,TOTAL (7439-95-4)	___	___	.	.	0.275	0.0787	0.275	0.0787	4	PPM	LB/DAY
MOLYBDENUM,TOTAL (7439-98-7)	___	___	.	.	0.0045	0.0013	0.0045	0.0013	4	PPM	LB/DAY
MANGANESE,TOTAL (7439-96-5)	___	___	.	.	1.0275	0.2941	1.0275	0.2941	4	PPM	LB/DAY
TIN,TOTAL (7440-31-5)	___	___	.	.	<0.005	<0.0014	<0.005	<0.0014	4	PPM	LB/DAY
TITANIUM,TOTAL (7440-32-6)	___	___	.	.	<0.01	<0.0029	<0.01	<0.0029	4	PPM	LB/DAY

CONTINUED FROM PAGE V2

EPA I.D. NUMBER= VA0004090 OUTFALL 108

1. POLLUTANT	MARK X TESTING REQUIRED	BELIEVED PRESENT	BELIEVED ABSENT	2. EFFLUENT A. MAXIMUM DAILY VALUE CONCENTRATION	A. MAXIMUM DAILY VALUE MASS	B. MAXIMUM 30 DAY VALUE CONCENTRATION	B. MAXIMUM 30 DAY VALUE MASS	C. LONG TERM AVRG. VALUE CONCENTRATION	C. LONG TERM AVRG. VALUE MASS	NO. OF ANALYSES	3. UNITS CONCENTRATION	3. UNITS MASS
METALS, CYANIDE, AND TOTAL PHENOLS												
POLLUTANT												
ANTIMONY,TOTAL (7440-36-0)	X			.	.	<0.0025	<0.0007	<0.0025	<0.0007	4	PPM	LB/DAY
ARSENIC,TOTAL (7440-38-2)	X			.	.	<0.003	<0.0009	<0.003	<0.0009	4	PPM	LB/DAY
BERYLLIUM,TOTAL (7440-41-7)	X			.	.	<0.0002	<0.0001	<0.0002	<0.0001	4	PPM	LB/DAY
CADMIUM,TOTAL (7440-43-9)	X			.	.	<0.0003	<0.0001	<0.0003	<0.0001	4	PPM	LB/DAY
CHROMIUM,TOTAL (7440-47-3)	X			.	.	0.002	0.0006	0.002	0.0006	4	PPM	LB/DAY
COPPER,TOTAL (7440-50-8)	X			.	.	0.0068	0.0019	0.0068	0.0019	4	PPM	LB/DAY
LEAD,TOTAL (7439-92-1)	X			.	.	<0.0015	<0.0004	<0.0015	<0.0004	4	PPM	LB/DAY
MERCURY,TOTAL (7439-97-6)	X			.	.	<0.0002	<0.0001	<0.0002	<0.0001	4	PPM	LB/DAY
NICKEL,TOTAL (7440-02-0)	X			.	.	<0.005	<0.0014	<0.005	<0.0014	4	PPM	LB/DAY
SELENIUM,TOTAL (7782-49-2)	X			.	.	<0.003	<0.0009	<0.003	<0.0009	4	PPM	LB/DAY
SILVER,TOTAL (7440-22-4)	X			.	.	<0.0001	.	<0.0001	.	4	PPM	LB/DAY
THALLIUM,TOTAL (7440-28-0)	X			.	.	<0.002	<0.0006	<0.002	<0.0006	4	PPM	LB/DAY
ZINC,TOTAL (7440-66-6)	X			.	.	0.0425	0.0122	0.0425	0.0122	4	PPM	LB/DAY
CYANIDE , TOTAL (0057-12-5)	X			.	.	<0.01	<0.0029	<0.01	<0.0029	4	PPM	LB/DAY
PHENOLS , TOTAL	X			.	.	<0.0425	<0.0122	<0.0425	<0.0122	4	PPM	LB/DAY

CONTINUED FROM PAGE V3

EPA I.D. NUMBER= VA0004090 OUTFALL 108

	MARK X TESTING REQUIRED	BELIEVED PRESENT	BELIEVED ABSENT	2. EFFLUENT A. MAXIMUM DAILY VALUE CONCENTRATION	A. MASS	B. MAXIMUM 30 DAY VALUE CONCENTRATION	B. MASS	C. LONG TERM AVRG. VALUE CONCENTRATION	C. MASS	NO. OF ANALYSES	3. UNITS CONCENTRATION	MASS
GCMS FRACTION - VOLATILE COMPOUNDS												
ACROLEIN (0107-02-8)	X		X	.	.	<0.0408	<0.0117	<0.0408	<0.0117	4	PPM	LB/DAY
ACRYLONITRILE (0107-13-1)	X		X	.	.	<0.0015	<0.0004	<0.0015	<0.0004	4	PPM	LB/DAY
BENZENE (0071-43-2)	X		X	.	.	<0.0044	<0.0013	<0.0044	<0.0013	4	PPM	LB/DAY
BIS (CHLOROMETHYL)-ETHER (542-88-1)				NOT SAMPLED		NOT SAMPLED		NOT SAMPLED				
BROMOFORM (0075-25-2)	X		X	.	.	<0.0047	<0.0013	<0.0047	<0.0013	4	PPM	LB/DAY
CARBON TETRACHLORIDE (0056-23-5)	X		X	.	.	<0.0028	<0.0008	<0.0028	<0.0008	4	PPM	LB/DAY
CHLOROBENZENE (0108-90-7)	X		X	.	.	<0.006	<0.0017	<0.006	<0.0017	4	PPM	LB/DAY
DIBROMOCHLOROMETHANE (0124-48-1)	X		X	.	.	<0.0031	<0.0009	<0.0031	<0.0009	4	PPM	LB/DAY
CHLOROETHANE (0075-00-3)	X		X	.	.	<0.0011	<0.0003	<0.0011	<0.0003	4	PPM	LB/DAY
2-CHLOROETHYLVINYL ETHER (0110-75-8)	X		X	.	.	<0.0012	<0.0003	<0.0012	<0.0003	4	PPM	LB/DAY
CHLOROFORM (0067-66-3)	X		X	.	.	<0.0016	<0.0005	<0.0016	<0.0005	4	PPM	LB/DAY
BROMODICHLOROMETHANE (0075-27-4)	X		X	.	.	<0.0022	<0.0006	<0.0022	<0.0006	4	PPM	LB/DAY
1,1-DICHLOROETHANE (0075-34-3)	X		X	.	.	<0.0047	<0.0013	<0.0047	<0.0013	4	PPM	LB/DAY
1,2-DICHLOROETHANE (0107-06-2)	X		X	.	.	<0.0028	<0.0008	<0.0028	<0.0008	4	PPM	LB/DAY
1,1-DICHLOROETHENE (0075-35-4)	X		X	.	.	<0.0028	<0.0008	<0.0028	<0.0008	4	PPM	LB/DAY
1,2-DICHLOROPROPANE (0078-87-5)	X		X	.	.	<0.006	<0.0017	<0.006	<0.0017	4	PPM	LB/DAY
TRANS-1,3-DICHLOROPROPENE (10061026)	X		X	.	.	<0.0009	<0.0003	<0.0009	<0.0003	4	PPM	LB/DAY
ETHYL BENZENE (0100-41-4)	X		X	.	.	<0.0072	<0.0021	<0.0072	<0.0021	4	PPM	LB/DAY
BROMOMETHANE (0074-83-9)	X		X	.	.	<0.0014	<0.0004	<0.0014	<0.0004	4	PPM	LB/DAY
CHLOROMETHANE (0074-87-3)	X		X	.	.	<0.0011	<0.0003	<0.0011	<0.0003	4	PPM	LB/DAY

CONTINUED FROM PAGE V4

EPA I.D. NUMBER= VA0004090 OUTFALL 108

	MARK X TESTING REQUIRED	BELIEVED PRESENT	BELIEVED ABSENT	2. EFFLUENT A. MAXIMUM DAILY VALUE CONCENTRATION	A. MASS	B. MAXIMUM 30 DAY VALUE CONCENTRATION	B. MASS	C. LONG TERM AVRG. VALUE CONCENTRATION	C. MASS	NO. OF ANALYSES	3. UNITS CONCENTRATION	MASS
GCMS FRACTION - VOLATILE COMPOUNDS (CONT												
METHYLENE CHLORIDE (0075-09-2)	X		X	.	.	<0.0028	<0.0008	<0.0028	<0.0008	4	PPM	LB/DAY
1,1,2,2-TETRACHLOROETHANE (0079-34-5)	X		X	.	.	<0.0069	<0.002	<0.0069	<0.002	4	PPM	LB/DAY
TETRACHLOROETHENE (0127-18-4)	X		X	.	.	<0.0041	<0.0012	<0.0041	<0.0012	4	PPM	LB/DAY
TOLUENE (0108-88-3)	X		X	.	.	<0.006	<0.0017	<0.006	<0.0017	4	PPM	LB/DAY
1 2-TRANS-DICHLOROETHYLENE (0156-60-5)	X		X	.	.	<0.0016	<0.0005	<0.0016	<0.0005	4	PPM	LB/DAY
1,1,1-TRICHLOROETHANE (0071-55-6)	X		X	.	.	<0.0038	<0.0011	<0.0038	<0.0011	4	PPM	LB/DAY
1,1,2-TRICHLOROETHANE (0079-00-5)	X		X	.	.	<0.005	<0.0014	<0.005	<0.0014	4	PPM	LB/DAY
TRICHLOROETHENE (0079-01-6)	X		X	.	.	<0.0019	<0.0005	<0.0019	<0.0005	4	PPM	LB/DAY
TRICHLOROFLUOROMETHANE (75-69-4)				NOT SAMPLED		NOT SAMPLED		NOT SAMPLED				
VINYL CHLORIDE (0075-01-4)	X		X	.	.	<0.0018	<0.0005	<0.0018	<0.0005	4	PPM	LB/DAY
GCMS FRACTION - ACID COMPOUNDS												
2-CHLOROPHENOL (0095-57-8)	X		X	.	.	<0.0033	<0.0009	<0.0033	<0.0009	4	PPM	LB/DAY
2,4-DICHLOROPHENOL (0120-83-2)	X		X	.	.	<0.0056	<0.0016	<0.0056	<0.0016	4	PPM	LB/DAY
2,4-DIMETHYLPHENOL (0105-67-9)	X		X	.	.	<0.0052	<0.0015	<0.0052	<0.0015	4	PPM	LB/DAY
4,6-DINITRO-2-METHYLPHENOL (0534-52-1)	X		X	.	.	<0.024	<0.0069	<0.024	<0.0069	4	PPM	LB/DAY
2,4-DINITROPHENOL (0051-28-5)	X		X	.	.	<0.042	<0.012	<0.042	<0.012	4	PPM	LB/DAY
2-NITROPHENOL (0088-75-5)	X		X	.	.	<0.0036	<0.001	<0.0036	<0.001	4	PPM	LB/DAY
4-NITROPHENOL (0100-02-7)	X		X	.	.	<0.0024	<0.0007	<0.0024	<0.0007	4	PPM	LB/DAY
4-CHLORO-3-METHYLPHENOL (0059-50-7)	X		X	.	.	<0.0075	<0.0021	<0.0075	<0.0021	4	PPM	LB/DAY
PENTACHLOROPHENOL (0087-86-5)	X		X	.	.	<0.0036	<0.001	<0.0036	<0.001	4	PPM	LB/DAY
PHENOL (0108-95-2)	X		X	.	.	<0.0027	<0.0008	<0.0027	<0.0008	4	PPM	LB/DAY
2,4,6-TRICHLOROPHENOL (0088-06-2)	X		X	.	.	<0.0027	<0.0008	<0.0027	<0.0008	4	PPM	LB/DAY

CONTINUED FROM PAGE V5

EPA I.D. NUMBER= VA0004090 OUTFALL 108

	MARK X TESTING REQUIRED	BELIEVED PRESENT	BELIEVED ABSENT	2. EFFLUENT A. MAXIMUM DAILY VALUE CONCENTRATION	A. MASS	B. MAXIMUM 30 DAY VALUE CONCENTRATION	B. MASS	C. LONG TERM AVRG. VALUE CONCENTRATION	C. MASS	NO. OF ANALYSES	3. UNITS CONCENTRATION	MASS
GCMS FRACTION - BASE/NEUTRAL COMPOUNDS												
ACENAPHTHENE (0083-32-9)	X		X	.	.	<0.003	<0.0009	<0.003	<0.0009	4	PPM	LB/DAY
ACENAPHTHYLENE (0208-96-8)	X		X	.	.	<0.0035	<0.001	<0.0035	<0.001	4	PPM	LB/DAY
ANTHRACENE (0120-12-7)	X		X	.	.	<0.0019	<0.0005	<0.0019	<0.0005	4	PPM	LB/DAY
BENZIDINE (0092-87-5)	X		X	.	.	<0.063	<0.018	<0.063	<0.018	4	PPM	LB/DAY
BENZO(A)ANTHRACENE (0056-55-3)	X		X	.	.	<0.0165	<0.0047	<0.0165	<0.0047	4	PPM	LB/DAY
BENZO(A)PYRENE (0050-32-8)	X		X	.	.	<0.0025	<0.0007	<0.0025	<0.0007	4	PPM	LB/DAY
BENZO(B)FLUORANTHENE (0205-99-2)	X		X	.	.	<0.0048	<0.0014	<0.0048	<0.0014	4	PPM	LB/DAY
BENZO(G H I)PERYLENE (0191-24-2)	X		X	.	.	<0.0041	<0.0012	<0.0041	<0.0012	4	PPM	LB/DAY
BENZO(K)FLUORANTHENE (0207-08-9)	X		X	.	.	<0.0025	<0.0007	<0.0025	<0.0007	4	PPM	LB/DAY
BIS(2-CHLOROETHOXY)METHANE (0111-91-1)	X		X	.	.	<0.0053	<0.0015	<0.0053	<0.0015	4	PPM	LB/DAY
BIS(-2-CHLOROETHYL)ETHER (0111-44-4)	X		X	.	.	<0.0057	<0.0016	<0.0057	<0.0016	4	PPM	LB/DAY
BIS(2-CHLOROISOPROPYL)ETHER (102-60-1)				NOT SAMPLED		NOT SAMPLED		NOT SAMPLED				
BIS(2-ETHYLHEXYL)PHTHALATE (0117-81-7)	X		X	.	.	<0.0025	<0.0007	<0.0025	<0.0007	4	PPM	LB/DAY
4-BROMOPHENYL-PHENYLETHER (0101-55-3)	X		X	.	.	<0.003	<0.0009	<0.003	<0.0009	4	PPM	LB/DAY
BUTYLBENZYLPHTHALATE (0085-68-7)	X		X	.	.	<0.0025	<0.0007	<0.0025	<0.0007	4	PPM	LB/DAY
2-CHLORONAPTHALENE (0091-58-7)	X		X	.	.	<0.0046	<0.0013	<0.0046	<0.0013	4	PPM	LB/DAY
4-CHLOROPHENYL-PHENYLETHER (7005-72-3)	X		X	.	.	<0.0042	<0.0012	<0.0042	<0.0012	4	PPM	LB/DAY
CHRYSENE (0218-01-9)	X		X	.	.	<0.0025	<0.0007	<0.0025	<0.0007	4	PPM	LB/DAY
DIBENZO(A H)ANTHRANCENE (0053-70-3)	X		X	.	.	<0.0025	<0.0007	<0.0025	<0.0007	4	PPM	LB/DAY
1,2-DICHLOROBENZENE (0095-50-1)	X		X	.	.	<0.004	<0.0011	<0.004	<0.0011	4	PPM	LB/DAY
1,3-DICHLOROBENZENE (0541-73-1)	X		X	.	.	<0.0031	<0.0009	<0.0031	<0.0009	4	PPM	LB/DAY

CONTINUED FROM PAGE V6

EPA I.D. NUMBER= VA0004090 OUTFALL 108

	MARK X TESTING REQUIRED	BELIEVED PRESENT	BELIEVED ABSENT	2. EFFLUENT A. MAXIMUM DAILY VALUE CONCENTRATION	A. MASS	B. MAXIMUM 30 DAY VALUE CONCENTRATION	B. MASS	C. LONG TERM AVRG. VALUE CONCENTRATION	C. MASS	NO. OF ANALYSES	3. UNITS CONCENTRATION	MASS
GCMS FRACTION - BASE/NEUTRAL COMP.(CONT)												
1,4-DICHLOROBENZENE (0106-46-7)	X		X	.	.	<0.0044	<0.0013	<0.0044	<0.0013	4	PPM	LB/DAY
3,3PR-DICHLOROBENZIDINE (0091-94-1)	X		X	.	.	<0.0078	<0.0022	<0.0078	<0.0022	4	PPM	LB/DAY
DIETHYLPHTHALATE (0084-66-2)	X		X	.	.	<0.0074	<0.0021	<0.0074	<0.0021	4	PPM	LB/DAY
DIMETHYL PHTHALATE (0131-11-3)	X		X	.	.	<0.0075	<0.0021	<0.0075	<0.0021	4	PPM	LB/DAY
DI-N-BUTYLPHTHALATE (0084-74-2)	X		X	.	.	<0.0064	<0.0018	<0.0064	<0.0018	4	PPM	LB/DAY
2,4-DINITROTOLUENE (0121-14-2)	X		X	.	.	<0.0057	<0.0016	<0.0057	<0.0016	4	PPM	LB/DAY
2,6-DINITROTOLUENE (0606-20-2)	X		X	.	.	<0.0034	<0.001	<0.0034	<0.001	4	PPM	LB/DAY
DI-N-OCTYLPHTHALATE (0117-84-0)	X		X	.	.	<0.0025	<0.0007	<0.0025	<0.0007	4	PPM	LB/DAY
1,2-DIPHENYLHYDRAZINE (0122-66-7)	X		X	.	.	<0.0088	<0.0025	<0.0088	<0.0025	4	PPM	LB/DAY
FLUORANTHENE (0206-44-0)	X		X	.	.	<0.0022	<0.0006	<0.0022	<0.0006	4	PPM	LB/DAY
FLUORENE (0086-73-7)	X		X	.	.	<0.0022	<0.0006	<0.0022	<0.0006	4	PPM	LB/DAY
HEXACHLOROBENZENE (0118-74-1)	X		X	.	.	<0.0031	<0.0009	<0.0031	<0.0009	4	PPM	LB/DAY
HEXACHLOROBUTADIENE (0087-68-3)	X		X	.	.	<0.0018	<0.0005	<0.0018	<0.0005	4	PPM	LB/DAY
HEXACHLOROCYCLOPENTADIENE (0077-47-4)	X		X	.	.	<0.02	<0.0057	<0.02	<0.0057	4	PPM	LB/DAY
HEXACHLOROETHANE (0067-72-1)	X		X	.	.	<0.0024	<0.0007	<0.0024	<0.0007	4	PPM	LB/DAY
INDENO(1,2,3-CD)PYRENE (0193-39-5)	X		X	.	.	<0.0037	<0.0011	<0.0037	<0.0011	4	PPM	LB/DAY
ISOPHORONE (0078-59-1)	X		X	.	.	<0.0051	<0.0015	<0.0051	<0.0015	4	PPM	LB/DAY
NAPHTHALENE (0091-20-3)	X		X	.	.	<0.0038	<0.0011	<0.0038	<0.0011	4	PPM	LB/DAY
NITROBENZENE (0098-95-3)	X		X	.	.	<0.0042	<0.0012	<0.0042	<0.0012	4	PPM	LB/DAY
N,NITROSODIMETHYLAMINE (0062-75-9)	X		X	.	.	<0.0062	<0.0018	<0.0062	<0.0018	4	PPM	LB/DAY
N-NITROSO-DI-N-PROPYLAMINE (0621-64-7)	X		X	.	.	<0.0036	<0.001	<0.0036	<0.001	4	PPM	LB/DAY

CONTINUED FROM PAGE V7

EPA I.D. NUMBER= VA0004090 OUTFALL 108

	MARK X TESTING REQUIRED	BELIEVED PRESENT	BELIEVED ABSENT	2. EFFLUENT A. MAXIMUM DAILY VALUE CONCENTRATION	MASS	B. MAXIMUM 30 DAY VALUE CONCENTRATION	MASS	C. LONG TERM AVRG. VALUE CONCENTRATION	MASS	NO. OF ANALYSES	3. UNITS CONCENTRATION	MASS
GCMS FRACTION - BASE/NEUTRAL COMP (CONT)												
N-NITROSODIPHENYLAMINE (0086-30-6)	X		X	.	.	<0.0027	<0.0008	<0.0027	<0.0008	4	PPM	LB/DAY
PHENANTHRENE (0085-01-8)	X		X	.	.	<0.0054	<0.0015	<0.0054	<0.0015	4	PPM	LB/DAY
PYRENE (0129-00-0)	X		X	.	.	<0.0038	<0.0011	<0.0038	<0.0011	4	PPM	LB/DAY
1,2,4-TRICHLORBENZENE (0120-82-1)	X		X	.	.	<0.0079	<0.0023	<0.0079	<0.0023	4	PPM	LB/DAY
GCMS FRACTION - PESTICIDES												
ALDRIN (0309-00-2)			X	.	.	<0.0019	<0.0005	<0.0019	<0.0005	4	PPM	LB/DAY
ALPHA BHC (0319-84-6)			X	.	.	<0.0031	<0.0009	<0.0031	<0.0009	4	PPM	LB/DAY
BETA BHC (0319-85-7)			X	.	.	<0.0042	<0.0012	<0.0042	<0.0012	4	PPM	LB/DAY
GAMMA BHC (0058-89-9)			X	.	.	<0.0022	<0.0006	<0.0022	<0.0006	4	PPM	LB/DAY
DELTA BHC (0319-86-8)			X	.	.	<0.0052	<0.0015	<0.0052	<0.0015	4	PPM	LB/DAY
CHLORDANE (0057-74-9)			X	.	.	<0.01	<0.0029	<0.01	<0.0029	4	PPM	LB/DAY
4,4PR-DDT (0050-29-3)			X	.	.	<0.0051	<0.0015	<0.0051	<0.0015	4	PPM	LB/DAY
4,4PR-DDE (0072-55-9)			X	.	.	<0.0056	<0.0016	<0.0056	<0.0016	4	PPM	LB/DAY
4,4PR-DDD (0072-54-8)			X	.	.	<0.0041	<0.0012	<0.0041	<0.0012	4	PPM	LB/DAY
DIELDRIN (0060-57-1)			X	.	.	<0.0044	<0.0013	<0.0044	<0.0013	4	PPM	LB/DAY
ALPHA-ENDOSULFAN (0115-29-7)			X	.	.	<0.0617	<0.0177	<0.0617	<0.0177	4	PPM	LB/DAY
BETA-ENDOSULFAN (0115-29-7)			X	.	.	<0.0803	<0.023	<0.0803	<0.023	4	PPM	LB/DAY
ENDOSULFAN SULFATE (1031-07-8)			X	.	.	<0.0056	<0.0016	<0.0056	<0.0016	4	PPM	LB/DAY
ENDRIN (0072-20-8)			X	.	.	<0.0056	<0.0016	<0.0056	<0.0016	4	PPM	LB/DAY
ENDRIN ALDEHYDE (7421-93-4)			X	.	.	<0.065	<0.0186	<0.065	<0.0186	4	PPM	LB/DAY
HEPTACHLOR (0076-44-8)			X	.	.	<0.0043	<0.0012	<0.0043	<0.0012	4	PPM	LB/DAY

CONTINUED FROM PAGE V8

EPA I.D. NUMBER= VA0004090 OUTFALL 108

	MARK X TESTING REQUIRED	BELIEVED PRESENT	BELIEVED ABSENT	2. EFFLUENT A. MAXIMUM DAILY VALUE CONCENTRATION	A. MASS	B. MAXIMUM 30 DAY VALUE CONCENTRATION	B. MASS	C. LONG TERM AVRG. VALUE CONCENTRATION	C. MASS	NO. OF ANALYSES	3. UNITS CONCENTRATION	MASS
GCMS FRACTION - PESTICIDES (CONTINUED)												
HEPTACHLOR EPOXIDE (1025-57-3)	____	____	__X__	.	.	<0.0022	<0.0006	<0.0022	<0.0006	4	PPM	LB/DAY
PCB 1242 (53469219)	____	____	__X__	.	.	<0.05	<0.0143	<0.05	<0.0143	4	PPM	LB/DAY
PCB 1254 (11097691)	____	____	__X__	.	.	<0.036	<0.0103	<0.036	<0.0103	4	PPM	LB/DAY
PCB 1221 (11104282)	____	____	__X__	.	.	<0.03	<0.0086	<0.03	<0.0086	4	PPM	LB/DAY
PCB 1232 (11141165)	____	____	__X__	.	.	<0.05	<0.0143	<0.05	<0.0143	4	PPM	LB/DAY
PCB 1248 (12672296)	____	____	__X__	.	.	<0.05	<0.0143	<0.05	<0.0143	4	PPM	LB/DAY
PCB 1260 (11096825)	____	____	__X__	.	.	<0.05	<0.0143	<0.05	<0.0143	4	PPM	LB/DAY
PCB 1016 (12674112)	____	____	__X__	.	.	<0.05	<0.0143	<0.05	<0.0143	4	PPM	LB/DAY
TOXAPHENE (8001-35-2)	____	____	__X__	.	.	<0.05	<0.0143	<0.05	<0.0143	4	PPM	LB/DAY

EPA I.D. NUMBER= VA0004090

OUTFALL 109

V. INTAKE AND EFFLUENT CHARACTERISTICS (CONTINUED FROM PAGE 3 OF FORM 2C)

PART A- YOU MUST PROVIDE THE RESULTS OF AT LEAST ONE ANALYSIS FOR EVERY POLLUTANT IN THIS TABLE. COMPLETE ONE TABLE FOR EACH OUTFALL. SEE INSTRUCTIONS FOR ADDITIONAL DETAILS

	2. EFFLUENT							3. UNITS	
	A. MAXIMUM DAILY VALUE		B. MAXIMUM 30 DAY VALUE		C. LONG TERM AVRG. VALUE				
POLLUTANT	CONCENTRATION	MASS	CONCENTRATION	MASS	CONCENTRATION	MASS	NO. OF ANALYSES	CONCENTRATION	MASS
TOTAL SUSPENDED SOLIDS	.	.	<12.6	<1.9032	<2.8937	<0.4371	32	PPM	LB/DAY
FLOW	.	.	0.0181	.	0.0181	.	32	MGD	.
PH	.	.	6.48 (MIN)	9.59 (MAX)	N/A	N/A	33	STD. UNITS	.

PART B.

	MARK X		2. EFFLUENT						3. UNITS	
	BELIEVED PRESENT	BELIEVED ABSENT	A. MAXIMUM DAILY VALUE		B. MAXIMUM 30 DAY VALUE		C. LONG TERM AVRG. VALUE			
			CONCENTRATION	MASS	CONCENTRATION	MASS	CONCENTRATION	MASS	NO. OF ANALYSES	CONCENTRATION	MASS

ITEM V-B CONTINUED
PART C.

EPA I.D. NUMBER= VA0004090 OUTFALL 109

1. POLLUTANT	MARK X BELIEVED PRESENT	MARK X BELIEVED ABSENT	2. EFFLUENT A. MAXIMUM DAILY VALUE CONCENTRATION	A. MAXIMUM DAILY VALUE MASS	B. MAXIMUM 30 DAY VALUE CONCENTRATION	B. MAXIMUM 30 DAY VALUE MASS	C. LONG TERM AVRG. VALUE CONCENTRATION	C. LONG TERM AVRG. VALUE MASS	NO. OF ANALYSES	3. UNITS CONCENTRATION	3. UNITS MASS
POLLUTANT											
OIL & GREASE	____	____	.	.	<15	<2.2657	<7.2765	<1.0991	34	PPM	LB/DAY

EPA I.D. NUMBER= VA0004090

OUTFALL 110

V. INTAKE AND EFFLUENT CHARACTERISTICS (CONTINUED FROM PAGE 3 OF FORM 2C)

PART A- YOU MUST PROVIDE THE RESULTS OF AT LEAST ONE ANALYSIS FOR EVERY POLLUTANT IN THIS TABLE. COMPLETE ONE TABLE FOR EACH OUTFALL. SEE INSTRUCTIONS FOR ADDITIONAL DETAILS

	2. EFFLUENT							3. UNITS	
	A. MAXIMUM DAILY VALUE		B. MAXIMUM 30 DAY VALUE		C. LONG TERM AVRG. VALUE				
POLLUTANT	CONCENTRATION	MASS	CONCENTRATION	MASS	CONCENTRATION	MASS	NO. OF ANALYSES	CONCENTRATION	MASS
TOTAL SUSPENDED SOLIDS	.	.	<11.7	<2.7241	<3.4667	<0.8071	6	PPM	LB/DAY
FLOW	.	.	0.0279	.	0.0279	.	6	MGD	.
PH	.	.	7.22 (MIN)	9.36 (MAX)	N/A	N/A	6	STD. UNITS	.

PART B.

	MARK X		2. EFFLUENT						3. UNITS	
	BELIEVED PRESENT	BELIEVED ABSENT	A. MAXIMUM DAILY VALUE		B. MAXIMUM 30 DAY VALUE		C. LONG TERM AVRG. VALUE			
			CONCENTRATION	MASS	CONCENTRATION	MASS	CONCENTRATION	MASS	NO. OF ANALYSES	CONCENTRATION	MASS

ITEM V-B CONTINUED
PART C.

EPA I.D. NUMBER= VA0004090 OUTFALL 110

1. POLLUTANT	MARK X BELIEVED PRESENT	MARK X BELIEVED ABSENT	2. EFFLUENT A. MAXIMUM DAILY VALUE CONCENTRATION	A. MAXIMUM DAILY VALUE MASS	B. MAXIMUM 30 DAY VALUE CONCENTRATION	B. MAXIMUM 30 DAY VALUE MASS	C. LONG TERM AVRG. VALUE CONCENTRATION	C. LONG TERM AVRG. VALUE MASS	NO. OF ANALYSES	3. UNITS CONCENTRATION	3. UNITS MASS
POLLUTANT											
OIL & GREASE	____	____	.	.	<5	<1.1641	<5	<1.1641	6	PPM	LB/DAY

EPA I.D. NUMBER= VA0004090

OUTFALL 111

V. INTAKE AND EFFLUENT CHARACTERISTICS (CONTINUED FROM PAGE 3 OF FORM 2C)

PART A- YOU MUST PROVIDE THE RESULTS OF AT LEAST ONE ANALYSIS FOR EVERY POLLUTANT IN THIS TABLE. COMPLETE ONE TABLE FOR EACH OUTFALL. SEE INSTRUCTIONS FOR ADDITIONAL DETAILS

	2. EFFLUENT							3. UNITS	
	A. MAXIMUM DAILY VALUE		B. MAXIMUM 30 DAY VALUE		C. LONG TERM AVRG. VALUE				
POLLUTANT	CONCENTRATION	MASS	CONCENTRATION	MASS	CONCENTRATION	MASS	NO. OF ANALYSES	CONCENTRATION	MASS
TOTAL SUSPENDED SOLIDS	.	.	<5.7	<1.3271	<1.9	<0.4424	5	PPM	LB/DAY
FLOW	.	.	0.0279	.	0.0279	.	5	MGD	.
PH	.	.	6.7 (MIN)	8.8 (MAX)	N/A	N/A	5	STD. UNITS	.

PART B.

	MARK X		2. EFFLUENT						3. UNITS	
	BELIEVED PRESENT	BELIEVED ABSENT	A. MAXIMUM DAILY VALUE		B. MAXIMUM 30 DAY VALUE		C. LONG TERM AVRG. VALUE			
			CONCENTRATION	MASS	CONCENTRATION	MASS	CONCENTRATION	MASS	NO. OF ANALYSES	CONCENTRATION	MASS

ITEM V-B CONTINUED
PART C.

EPA I.D. NUMBER= VA0004090 OUTFALL 111

1. POLLUTANT	MARK X BELIEVED PRESENT	MARK X BELIEVED ABSENT	2. EFFLUENT A. MAXIMUM DAILY VALUE CONCENTRATION	A. MAXIMUM DAILY VALUE MASS	B. MAXIMUM 30 DAY VALUE CONCENTRATION	B. MAXIMUM 30 DAY VALUE MASS	C. LONG TERM AVRG. VALUE CONCENTRATION	C. LONG TERM AVRG. VALUE MASS	NO. OF ANALYSES	3. UNITS CONCENTRATION	3. UNITS MASS
POLLUTANT											
OIL & GREASE	____	____	.	.	<5	<1.1641	<5	<1.1641	5	PPM	LB/DAY

EPA I.D. NUMBER= VA0004090

OUTFALL 112

V. INTAKE AND EFFLUENT CHARACTERISTICS (CONTINUED FROM PAGE 3 OF FORM 2C)

PART A- YOU MUST PROVIDE THE RESULTS OF AT LEAST ONE ANALYSIS FOR EVERY POLLUTANT IN THIS TABLE. COMPLETE ONE TABLE FOR EACH OUTFALL. SEE INSTRUCTIONS FOR ADDITIONAL DETAILS

	2. EFFLUENT							3. UNITS	
	A. MAXIMUM DAILY VALUE		B. MAXIMUM 30 DAY VALUE		C. LONG TERM AVRG. VALUE				
POLLUTANT	CONCENTRATION	MASS	CONCENTRATION	MASS	CONCENTRATION	MASS	NO. OF ANALYSES	CONCENTRATION	MASS
TOTAL SUSPENDED SOLIDS	.	.	27.5	13.7367	10.8222	3.2065	18	PPM	LB/DAY
FLOW	.	.	0.279	.	0.04267059	.	17	MGD	.
PH	.	.	7.28 (MIN)	11.1 (MAX)	N/A	N/A	17	STD. UNITS	.

PART B.

	MARK X		2. EFFLUENT						3. UNITS	
	BELIEVED PRESENT	BELIEVED ABSENT	A. MAXIMUM DAILY VALUE		B. MAXIMUM 30 DAY VALUE		C. LONG TERM AVRG. VALUE			
			CONCENTRATION	MASS	CONCENTRATION	MASS	CONCENTRATION	MASS	NO. OF ANALYSES	CONCENTRATION	MASS

ITEM V-B CONTINUED
PART C.

EPA I.D. NUMBER= VA0004090 OUTFALL 112

1. POLLUTANT	MARK X BELIEVED PRESENT	MARK X BELIEVED ABSENT	2. EFFLUENT A. MAXIMUM DAILY VALUE CONCENTRATION	A. MAXIMUM DAILY VALUE MASS	B. MAXIMUM 30 DAY VALUE CONCENTRATION	B. MAXIMUM 30 DAY VALUE MASS	C. LONG TERM AVRG. VALUE CONCENTRATION	C. LONG TERM AVRG. VALUE MASS	NO. OF ANALYSES	3. UNITS CONCENTRATION	3. UNITS MASS
POLLUTANT											
OIL & GREASE	____	____	.	.	<14.2	<11.6413	<6.1176	<2.0406	17	PPM	LB/DAY

EPA I.D. NUMBER= VA0004090

OUTFALL 113

V. INTAKE AND EFFLUENT CHARACTERISTICS (CONTINUED FROM PAGE 3 OF FORM 2C)

PART A- YOU MUST PROVIDE THE RESULTS OF AT LEAST ONE ANALYSIS FOR EVERY POLLUTANT IN THIS TABLE. COMPLETE ONE TABLE FOR EACH OUTFALL. SEE INSTRUCTIONS FOR ADDITIONAL DETAILS

POLLUTANT	2. EFFLUENT A. MAXIMUM DAILY VALUE CONCENTRATION	A. MAXIMUM DAILY VALUE MASS	B. MAXIMUM 30 DAY VALUE CONCENTRATION	B. MAXIMUM 30 DAY VALUE MASS	C. LONG TERM AVRG. VALUE CONCENTRATION	C. LONG TERM AVRG. VALUE MASS	NO. OF ANALYSES	3. UNITS CONCENTRATION	3. UNITS MASS
BIOCHEMICAL OXYGEN DEMAND	2.52	0.58672026	.	.	.	.	1	PPM	LB/DAY
CHEMICAL OXYGEN DEMAND	1750	407.444625	.	.	.	.	1	PPM	LB/DAY
TOTAL ORGANIC CARBON	938.9	218.59986195	.	.	.	.	1	PPM	LB/DAY
TOTAL SUSPENDED SOLIDS	.	.	<12.3	<2.8638	<4.6444	<1.1512	18	PPM	LB/DAY
AMMONIA,TOTAL	132.6	30.8726613	.	.	.	.	1	PPM	LB/DAY
FLOW	.	.	0.279	.	0.04185	.	18	MGD	.
TEMPERATURE (SUMMER)	26	.	.	.	.	.	1	DEGREES C	.
PH	.	.	7.53 (MIN)	10.4 (MAX)	N/A	N/A	19	STD. UNITS	.

PART B.

	MARK X BELIEVED PRESENT	MARK X BELIEVED ABSENT	2. EFFLUENT A. MAXIMUM DAILY VALUE CONCENTRATION	A. MAXIMUM DAILY VALUE MASS	B. MAXIMUM 30 DAY VALUE CONCENTRATION	B. MAXIMUM 30 DAY VALUE MASS	C. LONG TERM AVRG. VALUE CONCENTRATION	C. LONG TERM AVRG. VALUE MASS	NO. OF ANALYSES	3. UNITS CONCENTRATION	3. UNITS MASS
BROMIDE,TOTAL (24959-67-6)	____	____	7.11	1.655389305	.	.	.	.	1	PPM	LB/DAY
CHLORINE, TOTAL RESIDUAL	____	__X__	NOT SAMPLED		NOT SAMPLED						
COLOR	____	____	160	N/A	.	.	.	.	1	NTU	.
FECAL COLIFORM	____	__X__	NOT SAMPLED		NOT SAMPLED						
FLUORIDE (16984-48-8)	____	____	5.034	1.172043567	.	.	.	.	1	PPM	LB/DAY
NITRATE + NITRITE	____	____	0.09	0.020954295	.	.	.	.	1	PPM	LB/DAY

CAS=. SITE=113 MONTH=8 YEAR=2000 PARAMTR=COLOR FLOW=0.0279 _FREQ_=1 SAMPLES=. MAXDAYLD=N/A MAXDAYCN=160 LTALOAD=. LTACONC=. MAX30LD=. MAX30CN=. ORDER=13 UNITSM=. UNITS=NTU
INTAKEN=. INTAKEC= INTAKEMS= PAGE=V1 GROUP=POLLUTANT FIRST.SITE=0 LAST.SITE=0 FIRST.PAGE=0 LAST.PAGE=0 FIRST.GROUP=0 LAST.GROUP=0 _I_=. CHECK=8.765389305 I=. FILLIT= _ERROR_=0
_N_=862

ITEM V-B CONTINUED
PART C.

EPA I.D. NUMBER= VA0004090 OUTFALL 113

1. POLLUTANT	MARK X BELIEVED PRESENT	MARK X BELIEVED ABSENT	2. EFFLUENT A. MAXIMUM DAILY VALUE CONCENTRATION	A. MAXIMUM DAILY VALUE MASS	B. MAXIMUM 30 DAY VALUE CONCENTRATION	B. MAXIMUM 30 DAY VALUE MASS	C. LONG TERM AVRG. VALUE CONCENTRATION	C. LONG TERM AVRG. VALUE MASS	NO. OF ANALYSES	3. UNITS CONCENTRATION	3. UNITS MASS
POLLUTANT											
NITROGEN, TOTAL ORG. AS N	____	____	101.64	23.66438382	.	.	.	.	1	PPM	LB/DAY
OIL & GREASE	____	____	.	.	<13.5	<11.6413	<6.1667	<2.0178	18	PPM	LB/DAY
PHOSPHORUS (AS P), TOTAL (7723-14-0)	____	____	0.07	0.016297785	.	.	.	.	1	PPM	LB/DAY
J. RADIOACTIVITY											
ALPHA, TOTAL	____	____	<14.5	.	.	.	.	.	1	PPM	LB/DAY
BETA, TOTAL	____	____	<10.9	.	.	.	.	.	1	PPM	LB/DAY
RADIUM,TOTAL	____	____	0.6	0.1396953	.	.	.	.	1	PPM	LB/DAY
RADIUM 226 , TOTAL	____	____	0.6	0.1396953	.	.	.	.	1	PPM	LB/DAY
SULFATE (AS SO4)	____	____	3700.61	861.596373555	.	.	.	.	1	PPM	LB/DAY
SULFIDE (AS S)	____	____	0.02	0.00465651	.	.	.	.	1	PPM	LB/DAY
SURFACTANTS	____	____	<0.025	<0.0058206375	.	.	.	.	1	PPM	LB/DAY
ALUMINUM,TOTAL (7429-90-5)	____	____	0.24	0.05587812	.	.	.	.	1	PPM	LB/DAY
BARIUM,TOTAL (7440-39-3)	____	____	0.016	0.003725208	.	.	.	.	1	PPM	LB/DAY
BORON,TOTAL (7440-42-8)	____	____	0.06	0.01396953	.	.	.	.	1	PPM	LB/DAY
COBALT,TOTAL (7440-48-4)	____	____	0.009	0.0020954295	.	.	.	.	1	PPM	LB/DAY
IRON,TOTAL (7439-89-6)	____	____	0.83	0.193245165	.	.	.	.	1	PPM	LB/DAY
MAGNESIUM,TOTAL (7439-95-4)	____	____	0.22	0.05122161	.	.	.	.	1	PPM	LB/DAY
MOLYBDENUM,TOTAL (7439-98-7)	____	____	0.007	0.0016297785	.	.	.	.	1	PPM	LB/DAY
MANGANESE,TOTAL (7439-96-5)	____	____	7.31	1.701954405	.	.	.	.	1	PPM	LB/DAY
TIN,TOTAL (7440-31-5)	____	____	<0.005	<0.0011641275	.	.	.	.	1	PPM	LB/DAY
TITANIUM,TOTAL (7440-32-6)	____	____	<0.01	<0.002328255	.	.	.	.	1	PPM	LB/DAY

CONTINUED FROM PAGE V2

EPA I.D. NUMBER= VA0004090 OUTFALL 113

1. POLLUTANT	MARK X TESTING REQUIRED	BELIEVED PRESENT	BELIEVED ABSENT	2. EFFLUENT A. MAXIMUM DAILY VALUE CONCENTRATION	A. MASS	B. MAXIMUM 30 DAY VALUE CONCENTRATION	B. MASS	C. LONG TERM AVRG. VALUE CONCENTRATION	C. MASS	NO. OF ANALYSES	3. UNITS CONCENTRATION	MASS
METALS, CYANIDE, AND TOTAL PHENOLS												
POLLUTANT												
ANTIMONY,TOTAL (7440-36-0)	X			<0.002	<0.000465651	.	.	.	.	1	PPM	LB/DAY
ARSENIC,TOTAL (7440-38-2)	X			<0.003	<0.0006984765	.	.	.	.	1	PPM	LB/DAY
BERYLLIUM,TOTAL (7440-41-7)	X			<0.0002	<0.0000465651	.	.	.	.	1	PPM	LB/DAY
CADMIUM,TOTAL (7440-43-9)	X			<0.0003	<0.0000698477	.	.	.	.	1	PPM	LB/DAY
CHROMIUM,TOTAL (7440-47-3)	X			0.034	0.007916067	.	.	.	.	1	PPM	LB/DAY
COPPER,TOTAL (7440-50-8)	X			0.017	0.0039580335	.	.	.	.	1	PPM	LB/DAY
LEAD,TOTAL (7439-92-1)	X			0.001	0.0002328255	.	.	.	.	1	PPM	LB/DAY
MERCURY,TOTAL (7439-97-6)	X			0.0002	0.0000465651	.	.	.	.	1	PPM	LB/DAY
NICKEL,TOTAL (7440-02-0)	X			0.024	0.005587812	.	.	.	.	1	PPM	LB/DAY
SELENIUM,TOTAL (7782-49-2)	X			<0.003	<0.0006984765	.	.	.	.	1	PPM	LB/DAY
SILVER,TOTAL (7440-22-4)	X			<0.0001	<0.0000232825	.	.	.	.	1	PPM	LB/DAY
THALLIUM,TOTAL (7440-28-0)	X			<0.002	<0.000465651	.	.	.	.	1	PPM	LB/DAY
ZINC,TOTAL (7440-66-6)	X			0.024	0.005587812	.	.	.	.	1	PPM	LB/DAY
CYANIDE , TOTAL (0057-12-5)	X			<0.01	<0.002328255	.	.	.	.	1	PPM	LB/DAY
PHENOLS , TOTAL	X			<0.01	<0.002328255	.	.	.	.	1	PPM	LB/DAY

CONTINUED FROM PAGE V3

EPA I.D. NUMBER= VA0004090 OUTFALL 113

	MARK X TESTING REQUIRED	BELIEVED PRESENT	BELIEVED ABSENT	2. EFFLUENT A. MAXIMUM DAILY VALUE CONCENTRATION	A. MASS	B. MAXIMUM 30 DAY VALUE CONCENTRATION	B. MASS	C. LONG TERM AVRG. VALUE CONCENTRATION	C. MASS	NO. OF ANALYSES	3. UNITS CONCENTRATION	MASS
GCMS FRACTION - VOLATILE COMPOUNDS												
ACROLEIN (0107-02-8)	X		X	<0.0408	<0.0094992804	.	.	.	.	1	PPM	LB/DAY
ACRYLONITRILE (0107-13-1)	X		X	<0.0015	<0.0003492382	.	.	.	.	1	PPM	LB/DAY
BENZENE (0071-43-2)	X		X	<0.0044	<0.0010244322	.	.	.	.	1	PPM	LB/DAY
BIS (CHLOROMETHYL) ETHER (542-88-1)				NOT SAMPLED		NOT SAMPLED		NOT SAMPLED				
BROMOFORM (0075-25-2)	X		X	<0.0047	<0.0010942798	.	.	.	.	1	PPM	LB/DAY
CARBON TETRACHLORIDE (0056-23-5)	X		X	<0.0028	<0.0006519114	.	.	.	.	1	PPM	LB/DAY
CHLOROBENZENE (0108-90-7)	X		X	<0.006	<0.001396953	.	.	.	.	1	PPM	LB/DAY
DIBROMOCHLOROMETHANE (0124-48-1)	X		X	<0.0031	<0.0007217591	.	.	.	.	1	PPM	LB/DAY
CHLOROETHANE (0075-00-3)	X		X	<0.0011	<0.000256108	.	.	.	.	1	PPM	LB/DAY
2-CHLOROETHYLVINYL ETHER (0110-75-8)	X		X	<0.0012	<0.0002793906	.	.	.	.	1	PPM	LB/DAY
CHLOROFORM (0067-66-3)	X		X	<0.0016	<0.0003725208	.	.	.	.	1	PPM	LB/DAY
BROMODICHLOROMETHANE (0075-27-4)	X		X	<0.0022	<0.0005122161	.	.	.	.	1	PPM	LB/DAY
1,1-DICHLOROETHANE (0075-34-3)	X		X	<0.0047	<0.0010942798	.	.	.	.	1	PPM	LB/DAY
1,2-DICHLOROETHANE (0107-06-2)	X		X	<0.0028	<0.0006519114	.	.	.	.	1	PPM	LB/DAY
1,1-DICHLOROETHENE (0075-35-4)	X		X	<0.0028	<0.0006519114	.	.	.	.	1	PPM	LB/DAY
1,2-DICHLOROPROPANE (0078-87-5)	X		X	<0.006	<0.001396953	.	.	.	.	1	PPM	LB/DAY
TRANS-1,3-DICHLOROPROPENE (10061026)	X		X	<0.0009	<0.000209543	.	.	.	.	1	PPM	LB/DAY
ETHYL BENZENE (0100-41-4)	X		X	<0.0072	<0.0016763436	.	.	.	.	1	PPM	LB/DAY
BROMOMETHANE (0074-83-9)	X		X	<0.0014	<0.0003259557	.	.	.	.	1	PPM	LB/DAY
CHLOROMETHANE (0074-87-3)	X		X	<0.0011	<0.000256108	.	.	.	.	1	PPM	LB/DAY

CONTINUED FROM PAGE V4

EPA I.D. NUMBER= VA0004090 OUTFALL 113

	MARK X TESTING REQUIRED	BELIEVED PRESENT	BELIEVED ABSENT	2. EFFLUENT A. MAXIMUM DAILY VALUE CONCENTRATION	A. MASS	B. MAXIMUM 30 DAY VALUE CONCENTRATION	B. MASS	C. LONG TERM AVRG. VALUE CONCENTRATION	C. MASS	NO. OF ANALYSES	3. UNITS CONCENTRATION	MASS
GCMS FRACTION - VOLATILE COMPOUNDS (CONT												
METHYLENE CHLORIDE (0075-09-2)	X		X	<0.0028	<0.0006519114	.	.	.	.	1	PPM	LB/DAY
1,1,2,2-TETRACHLOROETHANE (0079-34-5)	X		X	<0.0069	<0.001606496	.	.	.	.	1	PPM	LB/DAY
TETRACHLOROETHENE (0127-18-4)	X		X	<0.0041	<0.0009545845	.	.	.	.	1	PPM	LB/DAY
TOLUENE (0108-88-3)	X		X	<0.006	<0.001396953	.	.	.	.	1	PPM	LB/DAY
1 2-TRANS-DICHLOROETHYLENE (0156-60-5)	X		X	<0.0016	<0.0003725208	.	.	.	.	1	PPM	LB/DAY
1,1,1-TRICHLOROETHANE (0071-55-6)	X		X	<0.0038	<0.0008847369	.	.	.	.	1	PPM	LB/DAY
1,1,2-TRICHLOROETHANE (0079-00-5)	X		X	<0.005	<0.0011641275	.	.	.	.	1	PPM	LB/DAY
TRICHLOROETHENE (0079-01-6)	X		X	<0.0019	<0.0004423684	.	.	.	.	1	PPM	LB/DAY
TRICHLOROFLUOROMETHANE (75-69-4)				NOT SAMPLED		NOT SAMPLED		NOT SAMPLED				
VINYL CHLORIDE (0075-01-4)	X		X	<0.0018	<0.0004190859	.	.	.	.	1	PPM	LB/DAY
GCMS FRACTION - ACID COMPOUNDS												
2-CHLOROPHENOL (0095-57-8)	X		X	<0.0033	<0.0007683242	.	.	.	.	1	PPM	LB/DAY
2,4-DICHLOROPHENOL (0120-83-2)	X		X	<0.0056	<0.0013038228	.	.	.	.	1	PPM	LB/DAY
2,4-DIMETHYLPHENOL (0105-67-9)	X		X	<0.0052	<0.0012106926	.	.	.	.	1	PPM	LB/DAY
4,6-DINITRO-2-METHYLPHENOL (0534-52-1)	X		X	<0.024	<0.005587812	.	.	.	.	1	PPM	LB/DAY
2,4-DINITROPHENOL (0051-28-5)	X		X	<0.042	<0.009778671	.	.	.	.	1	PPM	LB/DAY
2-NITROPHENOL (0088-75-5)	X		X	<0.0036	<0.0008381718	.	.	.	.	1	PPM	LB/DAY
4-NITROPHENOL (0100-02-7)	X		X	<0.0024	<0.0005587812	.	.	.	.	1	PPM	LB/DAY
4-CHLORO-3-METHYLPHENOL (0059-50-7)	X		X	<0.0075	<0.0017461913	.	.	.	.	1	PPM	LB/DAY
PENTACHLOROPHENOL (0087-86-5)	X		X	<0.0036	<0.0008381718	.	.	.	.	1	PPM	LB/DAY
PHENOL (0108-95-2)	X		X	<0.0027	<0.0006286288	.	.	.	.	1	PPM	LB/DAY
2,4,6-TRICHLOROPHENOL (0088-06-2)	X		X	<0.0027	<0.0006286288	.	.	.	.	1	PPM	LB/DAY

CONTINUED FROM PAGE V5

EPA I.D. NUMBER= VA0004090 OUTFALL 113

	MARK X TESTING REQUIRED	BELIEVED PRESENT	BELIEVED ABSENT	2. EFFLUENT A. MAXIMUM DAILY VALUE CONCENTRATION	MASS	B. MAXIMUM 30 DAY VALUE CONCENTRATION	MASS	C. LONG TERM AVRG. VALUE CONCENTRATION	MASS	NO. OF ANALYSES	3. UNITS CONCENTRATION	MASS
GCMS FRACTION - BASE/NEUTRAL COMPOUNDS												
ACENAPHTHENE (0083-32-9)	X		X	<0.003	<0.0006984765	.	.	.	.	1	PPM	LB/DAY
ACENAPHTHYLENE (0208-96-8)	X		X	<0.0035	<0.0008148893	.	.	.	.	1	PPM	LB/DAY
ANTHRACENE (0120-12-7)	X		X	<0.0019	<0.0004423684	.	.	.	.	1	PPM	LB/DAY
BENZIDINE (0092-87-5)	X		X	<0.063	<0.0146680065	.	.	.	.	1	PPM	LB/DAY
BENZO(A)ANTHRACENE (0056-55-3)	X		X	<0.0165	<0.0038416208	.	.	.	.	1	PPM	LB/DAY
BENZO(A)PYRENE (0050-32-8)	X		X	<0.0025	<0.0005820638	.	.	.	.	1	PPM	LB/DAY
BENZO(B)FLUORANTHENE (0205-99-2)	X		X	<0.0048	<0.0011175624	.	.	.	.	1	PPM	LB/DAY
BENZO(G H I)PERYLENE (0191-24-2)	X		X	<0.0041	<0.0009545845	.	.	.	.	1	PPM	LB/DAY
BENZO(K)FLUORANTHENE (0207-08-9)	X		X	<0.0025	<0.0005820638	.	.	.	.	1	PPM	LB/DAY
BIS(2-CHLOROETHOXY)METHANE (0111-91-1)	X		X	<0.0053	<0.0012339751	.	.	.	.	1	PPM	LB/DAY
BIS(-2-CHLOROETHYL)ETHER (0111-44-4)	X		X	<0.0057	<0.0013271054	.	.	.	.	1	PPM	LB/DAY
BIS(2-CHLOROISOPROPYL)ETHER (102-60-1)				NOT SAMPLED		NOT SAMPLED		NOT SAMPLED				
BIS(2-ETHYLHEXYL)PHTHALATE (0117-81-7)	X		X	<0.0025	<0.0005820638	.	.	.	.	1	PPM	LB/DAY
4-BROMOPHENYL-PHENYLETHER (0101-55-3)	X		X	<0.003	<0.0006984765	.	.	.	.	1	PPM	LB/DAY
BUTYLBENZYLPHTHALATE (0085-68-7)	X		X	<0.0025	<0.0005820638	.	.	.	.	1	PPM	LB/DAY
2-CHLORONAPTHALENE (0091-58-7)	X		X	<0.0046	<0.0010709973	.	.	.	.	1	PPM	LB/DAY
4-CHLOROPHENYL-PHENYLETHER (7005-72-3)	X		X	<0.0042	<0.0009778671	.	.	.	.	1	PPM	LB/DAY
CHRYSENE (0218-01-9)	X		X	<0.0025	<0.0005820638	.	.	.	.	1	PPM	LB/DAY
DIBENZO(A H)ANTHRANCENE (0053-70-3)	X		X	<0.0025	<0.0005820638	.	.	.	.	1	PPM	LB/DAY
1,2-DICHLOROBENZENE (0095-50-1)	X		X	<0.004	<0.000931302	.	.	.	.	1	PPM	LB/DAY
1,3-DICHLOROBENZENE (0541-73-1)	X		X	<0.0031	<0.0007217591	.	.	.	.	1	PPM	LB/DAY

CONTINUED FROM PAGE V6

EPA I.D. NUMBER= VA0004090 OUTFALL 113

	MARK X TESTING REQUIRED	BELIEVED PRESENT	BELIEVED ABSENT	2. EFFLUENT A. MAXIMUM DAILY VALUE CONCENTRATION	A. MASS	B. MAXIMUM 30 DAY VALUE CONCENTRATION	B. MASS	C. LONG TERM AVRG. VALUE CONCENTRATION	C. MASS	NO. OF ANALYSES	3. UNITS CONCENTRATION	MASS
GCMS FRACTION - BASE/NEUTRAL COMP.(CONT)												
1,4-DICHLOROBENZENE (0106-46-7)	X		X	<0.0044	<0.0010244322	.	.	.	.	1	PPM	LB/DAY
3,3PR-DICHLOROBENZIDINE (0091-94-1)	X		X	<0.0078	<0.0018160389	.	.	.	.	1	PPM	LB/DAY
DIETHYLPHTHALATE (0084-66-2)	X		X	<0.0074	<0.0017229087	.	.	.	.	1	PPM	LB/DAY
DIMETHYL PHTHALATE (0131-11-3)	X		X	<0.0075	<0.0017461913	.	.	.	.	1	PPM	LB/DAY
DI-N-BUTYLPHTHALATE (0084-74-2)	X		X	<0.0064	<0.0014900832	.	.	.	.	1	PPM	LB/DAY
2,4-DINITROTOLUENE (0121-14-2)	X		X	<0.0057	<0.0013271054	.	.	.	.	1	PPM	LB/DAY
2,6-DINITROTOLUENE (0606-20-2)	X		X	<0.0034	<0.0007916067	.	.	.	.	1	PPM	LB/DAY
DI-N-OCTYLPHTHALATE (0117-84-0)	X		X	<0.0025	<0.0005820638	.	.	.	.	1	PPM	LB/DAY
1,2-DIPHENYLHYDRAZINE (0122-66-7)	X		X	<0.0088	<0.0020488644	.	.	.	.	1	PPM	LB/DAY
FLUORANTHENE (0206-44-0)	X		X	<0.0022	<0.0005122161	.	.	.	.	1	PPM	LB/DAY
FLUORENE (0086-73-7)	X		X	<0.0022	<0.0005122161	.	.	.	.	1	PPM	LB/DAY
HEXACHLOROBENZENE (0118-74-1)	X		X	<0.0031	<0.0007217591	.	.	.	.	1	PPM	LB/DAY
HEXACHLOROBUTADIENE (0087-68-3)	X		X	<0.0018	<0.0004190859	.	.	.	.	1	PPM	LB/DAY
HEXACHLOROCYCLOPENTADIENE (0077-47-4)	X		X	<0.02	<0.00465651	.	.	.	.	1	PPM	LB/DAY
HEXACHLOROETHANE (0067-72-1)	X		X	<0.0024	<0.0005587812	.	.	.	.	1	PPM	LB/DAY
INDENO(1,2,3-CD)PYRENE (0193-39-5)	X		X	<0.0037	<0.0008614544	.	.	.	.	1	PPM	LB/DAY
ISOPHORONE (0078-59-1)	X		X	<0.0051	<0.00118741	.	.	.	.	1	PPM	LB/DAY
NAPHTHALENE (0091-20-3)	X		X	<0.0038	<0.0008847369	.	.	.	.	1	PPM	LB/DAY
NITROBENZENE (0098-95-3)	X		X	<0.0042	<0.0009778671	.	.	.	.	1	PPM	LB/DAY
N,NITROSODIMETHYLAMINE (0062-75-9)	X		X	<0.0062	<0.0014435181	.	.	.	.	1	PPM	LB/DAY
N-NITROSO-DI-N-PROPYLAMINE (0621-64-7)	X		X	<0.0036	<0.0008381718	.	.	.	.	1	PPM	LB/DAY

CONTINUED FROM PAGE V7

EPA I.D. NUMBER= VA0004090 OUTFALL 113

	MARK X TESTING REQUIRED	BELIEVED PRESENT	BELIEVED ABSENT	2. EFFLUENT A. MAXIMUM DAILY VALUE CONCENTRATION	A. MASS	B. MAXIMUM 30 DAY VALUE CONCENTRATION	B. MASS	C. LONG TERM AVRG. VALUE CONCENTRATION	C. MASS	NO. OF ANALYSES	3. UNITS CONCENTRATION	MASS
GCMS FRACTION - BASE/NEUTRAL COMP (CONT)												
N-NITROSODIPHENYLAMINE (0086-30-6)	X		X	<0.0027	<0.0006286288	.	.	.	.	1	PPM	LB/DAY
PHENANTHRENE (0085-01-8)	X		X	<0.0054	<0.0012572577	.	.	.	.	1	PPM	LB/DAY
PYRENE (0129-00-0)	X		X	<0.0038	<0.0008847369	.	.	.	.	1	PPM	LB/DAY
1,2,4-TRICHLORBENZENE (0120-82-1)	X		X	<0.0079	<0.0018393215	.	.	.	.	1	PPM	LB/DAY
GCMS FRACTION - PESTICIDES												
ALDRIN (0309-00-2)			X	<0.0019	<0.0004423684	.	.	.	.	1	PPM	LB/DAY
ALPHA BHC (0319-84-6)			X	<0.0031	<0.0007217591	.	.	.	.	1	PPM	LB/DAY
BETA BHC (0319-85-7)			X	<0.0042	<0.0009778671	.	.	.	.	1	PPM	LB/DAY
GAMMA BHC (0058-89-9)			X	<0.0022	<0.0005122161	.	.	.	.	1	PPM	LB/DAY
DELTA BHC (0319-86-8)			X	<0.0052	<0.0012106926	.	.	.	.	1	PPM	LB/DAY
CHLORDANE (0057-74-9)			X	<0.01	<0.002328255	.	.	.	.	1	PPM	LB/DAY
4,4PR-DDT (0050-29-3)			X	<0.0051	<0.00118741	.	.	.	.	1	PPM	LB/DAY
4,4PR-DDE (0072-55-9)			X	<0.0056	<0.0013038228	.	.	.	.	1	PPM	LB/DAY
4,4PR-DDD (0072-54-8)			X	<0.0041	<0.0009545845	.	.	.	.	1	PPM	LB/DAY
DIELDRIN (0060-57-1)			X	<0.0044	<0.0010244322	.	.	.	.	1	PPM	LB/DAY
ALPHA-ENDOSULFAN (0115-29-7)			X	<0.0617	<0.0143653334	.	.	.	.	1	PPM	LB/DAY
BETA-ENDOSULFAN (0115-29-7)			X	<0.0803	<0.0186958877	.	.	.	.	1	PPM	LB/DAY
ENDOSULFAN SULFATE (1031-07-8)			X	<0.0056	<0.0013038228	.	.	.	.	1	PPM	LB/DAY
ENDRIN (0072-20-8)			X	<0.0056	<0.0013038228	.	.	.	.	1	PPM	LB/DAY
ENDRIN ALDEHYDE (7421-93-4)			X	<0.065	<0.0151336575	.	.	.	.	1	PPM	LB/DAY
HEPTACHLOR (0076-44-8)			X	<0.0043	<0.0010011496	.	.	.	.	1	PPM	LB/DAY

CONTINUED FROM PAGE V8

EPA I.D. NUMBER= VA0004090 OUTFALL 113

	MARK X TESTING REQUIRED	BELIEVED PRESENT	BELIEVED ABSENT	2. EFFLUENT A. MAXIMUM DAILY VALUE CONCENTRATION	A. MASS	B. MAXIMUM 30 DAY VALUE CONCENTRATION	B. MASS	C. LONG TERM AVRG. VALUE CONCENTRATION	C. MASS	NO. OF ANALYSES	3. UNITS CONCENTRATION	MASS
GCMS FRACTION - PESTICIDES (CONTINUED)												
HEPTACHLOR EPOXIDE (1025-57-3)	____	____	__X__	<0.0022	<0.0005122161	.	.	.	.	1	PPM	LB/DAY
PCB 1242 (53469219)	____	____	__X__	<0.05	<0.011641275	.	.	.	.	1	PPM	LB/DAY
PCB 1254 (11097691)	____	____	__X__	<0.036	<0.008381718	.	.	.	.	1	PPM	LB/DAY
PCB 1221 (11104282)	____	____	__X__	<0.03	<0.006984765	.	.	.	.	1	PPM	LB/DAY
PCB 1232 (11141165)	____	____	__X__	<0.05	<0.011641275	.	.	.	.	1	PPM	LB/DAY
PCB 1248 (12672296)	____	____	__X__	<0.05	<0.011641275	.	.	.	.	1	PPM	LB/DAY
PCB 1260 (11096825)	____	____	__X__	<0.05	<0.011641275	.	.	.	.	1	PPM	LB/DAY
PCB 1016 (12674112)	____	____	__X__	<0.05	<0.011641275	.	.	.	.	1	PPM	LB/DAY
TOXAPHENE (8001-35-2)	____	____	__X__	<0.05	<0.011641275	.	.	.	.	1	PPM	LB/DAY

EPA I.D. NUMBER= VA0004090

OUTFALL 114

V. INTAKE AND EFFLUENT CHARACTERISTICS (CONTINUED FROM PAGE 3 OF FORM 2C)

PART A- YOU MUST PROVIDE THE RESULTS OF AT LEAST ONE ANALYSIS FOR EVERY POLLUTANT IN THIS TABLE. COMPLETE ONE TABLE FOR EACH OUTFALL. SEE INSTRUCTIONS FOR ADDITIONAL DETAILS

POLLUTANT	2. EFFLUENT A. MAXIMUM DAILY VALUE CONCENTRATION	A. MAXIMUM DAILY VALUE MASS	B. MAXIMUM 30 DAY VALUE CONCENTRATION	B. MAXIMUM 30 DAY VALUE MASS	C. LONG TERM AVRG. VALUE CONCENTRATION	C. LONG TERM AVRG. VALUE MASS	NO. OF ANALYSES	3. UNITS CONCENTRATION	3. UNITS MASS
BIOCHEMICAL OXYGEN DEMAND	5.7	0.00475665	.	.	.	.	1	PPM	LB/DAY
CHEMICAL OXYGEN DEMAND	10	0.008345	.	.	.	.	1	PPM	LB/DAY
TOTAL ORGANIC CARBON	8.4	0.0070098	.	.	.	.	1	PPM	LB/DAY
TOTAL SUSPENDED SOLIDS	.	.	<4	<0.0143	<1.66	<0.0091	5	PPM	LB/DAY
AMMONIA,TOTAL	0.12	0.00010014	.	.	.	.	1	PPM	LB/DAY
FLOW	.	.	0.0171	.	0.00993333	.	3	MGD	.
TEMPERATURE (SUMMER)	25	.	.	.	.	.	1	DEGREES C	.
PH	.	.	9.58 (MIN)	10.02 (MAX)	N/A	N/A	5	STD. UNITS	.

PART B.

	MARK X BELIEVED PRESENT	MARK X BELIEVED ABSENT	2. EFFLUENT A. MAXIMUM DAILY VALUE CONCENTRATION	A. MAXIMUM DAILY VALUE MASS	B. MAXIMUM 30 DAY VALUE CONCENTRATION	B. MAXIMUM 30 DAY VALUE MASS	C. LONG TERM AVRG. VALUE CONCENTRATION	C. LONG TERM AVRG. VALUE MASS	NO. OF ANALYSES	3. UNITS CONCENTRATION	3. UNITS MASS
BROMIDE,TOTAL (24959-67-6)	____	____	<0.2	<0.0001669	.	.	.	.	1	PPM	LB/DAY
CHLORINE, TOTAL RESIDUAL	____	__X__	NOT SAMPLED		NOT SAMPLED						

CAS=. SITE=114 MONTH=8 YEAR=2000 PARAMTR=COLOR FLOW=0.0001 _FREQ_=1 SAMPLES=. MAXDAYLD=N/A MAXDAYCN=10 LTALOAD=. LTACONC=. MAX30LD=. MAX30CN=. ORDER=13 UNITSM=. UNITS=NTU INTAKEN INTAKEC= INTAKEMS= PAGE=V1 GROUP=POLLUTANT FIRST.SITE=0 LAST.SITE=0 FIRST.PAGE=0 LAST.PAGE=0 FIRST.GROUP=0 LAST.GROUP=0 _I_=. CHECK=0.2001669 I=. FILLIT= _ERROR_=0 _N_=1018

COLOR	____	____	10	N/A	.	.	.	.	1	NTU	.
FECAL COLIFORM	____	__X__	NOT SAMPLED		NOT SAMPLED						
FLUORIDE (16984-48-8)	____	____	0.127	0.0001059815	.	.	.	.	1	PPM	LB/DAY
NITRATE + NITRITE	____	____	<0.01	<8.345E-6	.	.	.	.	1	PPM	LB/DAY

ITEM V-B CONTINUED
PART C.

EPA I.D. NUMBER= VA0004090 OUTFALL 114

1. POLLUTANT	MARK X BELIEVED PRESENT	MARK X BELIEVED ABSENT	2. EFFLUENT A. MAXIMUM DAILY VALUE CONCENTRATION	A. MAXIMUM DAILY VALUE MASS	B. MAXIMUM 30 DAY VALUE CONCENTRATION	B. MAXIMUM 30 DAY VALUE MASS	C. LONG TERM AVRG. VALUE CONCENTRATION	C. LONG TERM AVRG. VALUE MASS	NO. OF ANALYSES	3. UNITS CONCENTRATION	3. UNITS MASS
POLLUTANT											
NITROGEN, TOTAL ORG. AS N	____	____	<0.01	<8.345E-6	.	.	.	.	1	PPM	LB/DAY
OIL & GREASE	____	____	.	.	<5	<0.7135	<5	<0.3922	5	PPM	LB/DAY
PHOSPHORUS (AS P), TOTAL (7723-14-0)	____	____	<0.01	<8.345E-6	.	.	.	.	1	PPM	LB/DAY
J. RADIOACTIVITY											
ALPHA, TOTAL	____	____	<0.4	.	.	.	.	.	1	PPM	LB/DAY
BETA, TOTAL	____	____	<0.8	.	.	.	.	.	1	PPM	LB/DAY
SULFATE (AS SO4)	____	____	<0.5	<0.00041725	.	.	.	.	1	PPM	LB/DAY
SULFIDE (AS S)	____	____	0.01	8.345E-6	.	.	.	.	1	PPM	LB/DAY
SURFACTANTS	____	____	<0.025	<0.0000208625	.	.	.	.	1	PPM	LB/DAY
ALUMINUM,TOTAL (7429-90-5)	____	____	<0.2	<0.0001669	.	.	.	.	1	PPM	LB/DAY
BARIUM,TOTAL (7440-39-3)	____	____	<0.003	<2.5035E-6	.	.	.	.	1	PPM	LB/DAY
BORON,TOTAL (7440-42-8)	____	____	<0.02	<0.00001669	.	.	.	.	1	PPM	LB/DAY
COBALT,TOTAL (7440-48-4)	____	____	<0.003	<2.5035E-6	.	.	.	.	1	PPM	LB/DAY
IRON,TOTAL (7439-89-6)	____	____	0.06	0.00005007	.	.	.	.	1	PPM	LB/DAY
MAGNESIUM,TOTAL (7439-95-4)	____	____	<0.01	<8.345E-6	.	.	.	.	1	PPM	LB/DAY
MOLYBDENUM,TOTAL (7439-98-7)	____	____	<0.001	<8.345E-7	.	.	.	.	1	PPM	LB/DAY
MANGANESE,TOTAL (7439-96-5)	____	____	<0.02	<0.00001669	.	.	.	.	1	PPM	LB/DAY
TIN,TOTAL (7440-31-5)	____	____	<0.005	<4.1725E-6	.	.	.	.	1	PPM	LB/DAY
TITANIUM,TOTAL (7440-32-6)	____	____	<0.01	<8.345E-6	.	.	.	.	1	PPM	LB/DAY

CONTINUED FROM PAGE V2

EPA I.D. NUMBER= VA0004090 OUTFALL 114

1. POLLUTANT	MARK X TESTING REQUIRED	BELIEVED PRESENT	BELIEVED ABSENT	2. EFFLUENT A. MAXIMUM DAILY VALUE CONCENTRATION	A. MAXIMUM DAILY VALUE MASS	B. MAXIMUM 30 DAY VALUE CONCENTRATION	B. MAXIMUM 30 DAY VALUE MASS	C. LONG TERM AVRG. VALUE CONCENTRATION	C. LONG TERM AVRG. VALUE MASS	NO. OF ANALYSES	3. UNITS CONCENTRATION	3. UNITS MASS
METALS, CYANIDE, AND TOTAL PHENOLS												
POLLUTANT												
ANTIMONY,TOTAL (7440-36-0)	X			0.002	1.669E-6	.	.	.	.	1	PPM	LB/DAY
ARSENIC,TOTAL (7440-38-2)	X			<0.003	<2.5035E-6	.	.	.	.	1	PPM	LB/DAY
BERYLLIUM,TOTAL (7440-41-7)	X			<0.0002	<1.669E-7	.	.	.	.	1	PPM	LB/DAY
CADMIUM,TOTAL (7440-43-9)	X			<0.0003	<2.5035E-7	.	.	.	.	1	PPM	LB/DAY
CHROMIUM,TOTAL (7440-47-3)	X			<0.001	<8.345E-7	.	.	.	.	1	PPM	LB/DAY
COPPER,TOTAL (7440-50-8)	X			0.001	8.345E-7	.	.	.	.	1	PPM	LB/DAY
LEAD,TOTAL (7439-92-1)	X			<0.001	<8.345E-7	.	.	.	.	1	PPM	LB/DAY
MERCURY,TOTAL (7439-97-6)	X			<0.0002	<1.669E-7	.	.	.	.	1	PPM	LB/DAY
NICKEL,TOTAL (7440-02-0)	X			<0.005	<4.1725E-6	.	.	.	.	1	PPM	LB/DAY
SELENIUM,TOTAL (7782-49-2)	X			<0.003	<2.5035E-6	.	.	.	.	1	PPM	LB/DAY
SILVER,TOTAL (7440-22-4)	X			<0.0001	<8.345E-8	.	.	.	.	1	PPM	LB/DAY
THALLIUM,TOTAL (7440-28-0)	X			<0.002	<1.669E-6	.	.	.	.	1	PPM	LB/DAY
ZINC,TOTAL (7440-66-6)	X			0.025	0.0000208625	.	.	.	.	1	PPM	LB/DAY
CYANIDE , TOTAL (0057-12-5)	X			<0.01	<8.345E-6	.	.	.	.	1	PPM	LB/DAY
PHENOLS , TOTAL	X			0.02	0.00001669	.	.	.	.	1	PPM	LB/DAY

CONTINUED FROM PAGE V3

EPA I.D. NUMBER= VA0004090 OUTFALL 114

	MARK X TESTING REQUIRED	BELIEVED PRESENT	BELIEVED ABSENT	2. EFFLUENT A. MAXIMUM DAILY VALUE CONCENTRATION	A. MAXIMUM DAILY VALUE MASS	B. MAXIMUM 30 DAY VALUE CONCENTRATION	B. MAXIMUM 30 DAY VALUE MASS	C. LONG TERM AVRG. VALUE CONCENTRATION	C. LONG TERM AVRG. VALUE MASS	NO. OF ANALYSES	3. UNITS CONCENTRATION	3. UNITS MASS
GCMS FRACTION - VOLATILE COMPOUNDS												
67663 (0067-66-3)	__X__	____	__X__	6	0.005007	.	.	.	.	1	PPM	LB/DAY

EPA I.D. NUMBER= VA0004090

V. INTAKE AND EFFLUENT CHARACTERISTICS (CONTINUED FROM PAGE 3 OF FORM 2C)

OUTFALL 115

PART A- YOU MUST PROVIDE THE RESULTS OF AT LEAST ONE ANALYSIS FOR EVERY POLLUTANT IN THIS TABLE. COMPLETE ONE TABLE FOR EACH OUTFALL. SEE INSTRUCTIONS FOR ADDITIONAL DETAILS

	2. EFFLUENT							3. UNITS	
	A. MAXIMUM DAILY VALUE		B. MAXIMUM 30 DAY VALUE		C. LONG TERM AVRG. VALUE				
POLLUTANT	CONCENTRATION	MASS	CONCENTRATION	MASS	CONCENTRATION	MASS	NO. OF ANALYSES	CONCENTRATION	MASS
TOTAL SUSPENDED SOLIDS	.	.	<13.9	<3.1203	<5.1	<1.0976	3	PPM	LB/DAY
FLOW	.	.	0.0429	.	0.02746667	.	3	MGD	.
PH	.	.	8.11 (MIN)	10.2 (MAX)	N/A	N/A	3	STD. UNITS	.

PART B.

	MARK X		2. EFFLUENT						3. UNITS	
	BELIEVED PRESENT	BELIEVED ABSENT	A. MAXIMUM DAILY VALUE		B. MAXIMUM 30 DAY VALUE		C. LONG TERM AVRG. VALUE			
			CONCENTRATION	MASS	CONCENTRATION	MASS	CONCENTRATION	MASS	NO. OF ANALYSES	CONCENTRATION	MASS

ITEM V-B CONTINUED
PART C.

EPA I.D. NUMBER= VA0004090 OUTFALL 115

1. POLLUTANT	MARK X BELIEVED PRESENT	MARK X BELIEVED ABSENT	2. EFFLUENT A. MAXIMUM DAILY VALUE CONCENTRATION	A. MAXIMUM DAILY VALUE MASS	B. MAXIMUM 30 DAY VALUE CONCENTRATION	B. MAXIMUM 30 DAY VALUE MASS	C. LONG TERM AVRG. VALUE CONCENTRATION	C. LONG TERM AVRG. VALUE MASS	NO. OF ANALYSES	3. UNITS CONCENTRATION	3. UNITS MASS
POLLUTANT											
OIL & GREASE	____	____	.	.	<6.7	<1.79	<5.5667	<1.2733	3	PPM	LB/DAY

EPA I.D. NUMBER= VA0004090

V. INTAKE AND EFFLUENT CHARACTERISTICS (CONTINUED FROM PAGE 3 OF FORM 2C)

OUTFALL 116

PART A- YOU MUST PROVIDE THE RESULTS OF AT LEAST ONE ANALYSIS FOR EVERY POLLUTANT IN THIS TABLE. COMPLETE ONE TABLE FOR EACH OUTFALL. SEE INSTRUCTIONS FOR ADDITIONAL DETAILS

	2. EFFLUENT							3. UNITS	
	A. MAXIMUM DAILY VALUE		B. MAXIMUM 30 DAY VALUE		C. LONG TERM AVRG. VALUE				
POLLUTANT	CONCENTRATION	MASS	CONCENTRATION	MASS	CONCENTRATION	MASS	NO. OF ANALYSES	CONCENTRATION	MASS
FLOW	2.0265	.	.	.	.	.	1	MGD	.
PH	7.71 (MIN)	7.71 (MAX)	.	.	N/A	N/A	1	STD. UNITS	.

PART B.

MARK X		2. EFFLUENT						3. UNITS	
BELIEVED PRESENT	BELIEVED ABSENT	A. MAXIMUM DAILY VALUE		B. MAXIMUM 30 DAY VALUE		C. LONG TERM AVRG. VALUE			
		CONCENTRATION	MASS	CONCENTRATION	MASS	CONCENTRATION	MASS	NO. OF ANALYSES	CONCENTRATION	MASS

ITEM V-B CONTINUED
PART C.

EPA I.D. NUMBER= VA0004090 OUTFALL 116

1. POLLUTANT	MARK X BELIEVED PRESENT	MARK X BELIEVED ABSENT	2. EFFLUENT A. MAXIMUM DAILY VALUE CONCENTRATION	A. MAXIMUM DAILY VALUE MASS	B. MAXIMUM 30 DAY VALUE CONCENTRATION	B. MAXIMUM 30 DAY VALUE MASS	C. LONG TERM AVRG. VALUE CONCENTRATION	C. LONG TERM AVRG. VALUE MASS	NO. OF ANALYSES	3. UNITS CONCENTRATION	3. UNITS MASS
POLLUTANT											
OIL & GREASE	____	____	<5	<84.5557125	.	.	.	.	1	PPM	LB/DAY

EPA I.D. NUMBER= VA0004090 OUTFALL 117

V. INTAKE AND EFFLUENT CHARACTERISTICS (CONTINUED FROM PAGE 3 OF FORM 2C)

PART A- YOU MUST PROVIDE THE RESULTS OF AT LEAST ONE ANALYSIS FOR EVERY POLLUTANT IN THIS TABLE. COMPLETE ONE TABLE FOR EACH OUTFALL. SEE INSTRUCTIONS FOR ADDITIONAL DETAILS

POLLUTANT	2. EFFLUENT A. MAXIMUM DAILY VALUE CONCENTRATION	A. MAXIMUM DAILY VALUE MASS	B. MAXIMUM 30 DAY VALUE CONCENTRATION	B. MAXIMUM 30 DAY VALUE MASS	C. LONG TERM AVRG. VALUE CONCENTRATION	C. LONG TERM AVRG. VALUE MASS	NO. OF ANALYSES	3. UNITS CONCENTRATION	3. UNITS MASS
FLOW	1.8	.	.	.	.	.	1	MGD	.
PH	7 (MIN)	7 (MAX)	.	.	N/A	N/A	1	STD. UNITS	.

PART B.

MARK X BELIEVED PRESENT	MARK X BELIEVED ABSENT	2. EFFLUENT A. MAXIMUM DAILY VALUE CONCENTRATION	A. MAXIMUM DAILY VALUE MASS	B. MAXIMUM 30 DAY VALUE CONCENTRATION	B. MAXIMUM 30 DAY VALUE MASS	C. LONG TERM AVRG. VALUE CONCENTRATION	C. LONG TERM AVRG. VALUE MASS	NO. OF ANALYSES	3. UNITS CONCENTRATION	3. UNITS MASS

ITEM V-B CONTINUED
PART C.

EPA I.D. NUMBER= VA0004090 OUTFALL 117

1. POLLUTANT	MARK X BELIEVED PRESENT	MARK X BELIEVED ABSENT	2. EFFLUENT A. MAXIMUM DAILY VALUE CONCENTRATION	A. MAXIMUM DAILY VALUE MASS	B. MAXIMUM 30 DAY VALUE CONCENTRATION	B. MAXIMUM 30 DAY VALUE MASS	C. LONG TERM AVRG. VALUE CONCENTRATION	C. LONG TERM AVRG. VALUE MASS	NO. OF ANALYSES	3. UNITS CONCENTRATION	3. UNITS MASS
POLLUTANT											
OIL & GREASE	____	____	<5	<75.105	.	.	.	.	1	PPM	LB/DAY

EPA I.D. NUMBER= VA0004090

OUTFALL 118

V. INTAKE AND EFFLUENT CHARACTERISTICS (CONTINUED FROM PAGE 3 OF FORM 2C)

PART A- YOU MUST PROVIDE THE RESULTS OF AT LEAST ONE ANALYSIS FOR EVERY POLLUTANT IN THIS TABLE. COMPLETE ONE TABLE FOR EACH OUTFALL. SEE INSTRUCTIONS FOR ADDITIONAL DETAILS

POLLUTANT	2. EFFLUENT A. MAXIMUM DAILY VALUE CONCENTRATION	A. MAXIMUM DAILY VALUE MASS	B. MAXIMUM 30 DAY VALUE CONCENTRATION	B. MAXIMUM 30 DAY VALUE MASS	C. LONG TERM AVRG. VALUE CONCENTRATION	C. LONG TERM AVRG. VALUE MASS	NO. OF ANALYSES	3. UNITS CONCENTRATION	3. UNITS MASS
BIOCHEMICAL OXYGEN DEMAND	3.36	0.00280392	.	.	.	.	1	PPM	LB/DAY
CHEMICAL OXYGEN DEMAND	<5	<0.0041725	.	.	.	.	1	PPM	LB/DAY
TOTAL ORGANIC CARBON	6.4	0.0053408	.	.	.	.	1	PPM	LB/DAY
TOTAL SUSPENDED SOLIDS	.	.	<4	<0.7511	<1.55	<0.1638	6	PPM	LB/DAY
AMMONIA,TOTAL	0.27	0.000225315	.	.	.	.	1	PPM	LB/DAY
FLOW	.	.	0.09	.	0.07202	.	5	MGD	.
TEMPERATURE (SUMMER)	25	.	.	.	.	.	1	DEGREES C	.
PH	.	.	6.2 (MIN)	9.05 (MAX)	N/A	N/A	6	STD. UNITS	.

PART B.

	MARK X BELIEVED PRESENT	MARK X BELIEVED ABSENT	2. EFFLUENT A. MAXIMUM DAILY VALUE CONCENTRATION	A. MAXIMUM DAILY VALUE MASS	B. MAXIMUM 30 DAY VALUE CONCENTRATION	B. MAXIMUM 30 DAY VALUE MASS	C. LONG TERM AVRG. VALUE CONCENTRATION	C. LONG TERM AVRG. VALUE MASS	NO. OF ANALYSES	3. UNITS CONCENTRATION	3. UNITS MASS
BROMIDE,TOTAL (24959-67-6)	____	____	<0.2	<0.0001669	.	.	.	.	1	PPM	LB/DAY
CHLORINE, TOTAL RESIDUAL	____	__X__	NOT SAMPLED		NOT SAMPLED						
FLUORIDE (16984-48-8)	____	____	0.237	0.0001977765	.	.	.	.	1	PPM	LB/DAY
NITRATE + NITRITE	____	____	<0.01	<8.345E-6	.	.	.	.	1	PPM	LB/DAY

ITEM V-B CONTINUED
PART C.

EPA I.D. NUMBER= VA0004090 OUTFALL 118

1. POLLUTANT	MARK X BELIEVED PRESENT	MARK X BELIEVED ABSENT	2. EFFLUENT A. MAXIMUM DAILY VALUE CONCENTRATION	A. MAXIMUM DAILY VALUE MASS	B. MAXIMUM 30 DAY VALUE CONCENTRATION	B. MAXIMUM 30 DAY VALUE MASS	C. LONG TERM AVRG. VALUE CONCENTRATION	C. LONG TERM AVRG. VALUE MASS	NO. OF ANALYSES	3. UNITS CONCENTRATION	3. UNITS MASS
POLLUTANT									1	PPM	LB/DAY
NITROGEN, TOTAL ORG. AS N	___	___	3.11	0.002595295	.	.	.	.	6	PPM	LB/DAY
OIL & GREASE	___	___	.	.	<5	<3.7552	<5	<2.5049	1	PPM	LB/DAY
PHOSPHORUS (AS P), TOTAL (7723-14-0)	___	___	<0.01	<8.345E-6	.	.	.	.			
J. RADIOACTIVITY									1	PPM	LB/DAY
ALPHA, TOTAL	___	___	<0.3	.	.	.	.	.	1	PPM	LB/DAY
BETA, TOTAL	___	___	<0.6	.	.	.	.	.	1	PPM	LB/DAY
RADIUM,TOTAL	___	___	<0.6	<0.0005007	.	.	.	.	1	PPM	LB/DAY
RADIUM 226 , TOTAL	___	___	0.2	0.0001669	.	.	.	.	1	PPM	LB/DAY
SULFATE (AS SO4)	___	___	<0.5	<0.00041725	.	.	.	.	1	PPM	LB/DAY
SULFIDE (AS S)	___	___	0.01	8.345E-6	.	.	.	.	1	PPM	LB/DAY
SURFACTANTS	___	___	<0.025	<0.0000208625	.	.	.	.	1	PPM	LB/DAY
ALUMINUM,TOTAL (7429-90-5)	___	___	<0.2	<0.0001669	.	.	.	.	1	PPM	LB/DAY
BARIUM,TOTAL (7440-39-3)	___	___	<0.003	<2.5035E-6	.	.	.	.	1	PPM	LB/DAY
BORON,TOTAL (7440-42-8)	___	___	<0.02	<0.00001669	.	.	.	.	1	PPM	LB/DAY
COBALT,TOTAL (7440-48-4)	___	___	<0.003	<2.5035E-6	.	.	.	.	1	PPM	LB/DAY
IRON,TOTAL (7439-89-6)	___	___	<0.05	<0.000041725	.	.	.	.	1	PPM	LB/DAY
MAGNESIUM,TOTAL (7439-95-4)	___	___	<0.01	<8.345E-6	.	.	.	.	1	PPM	LB/DAY
MOLYBDENUM,TOTAL (7439-98-7)	___	___	<0.001	<8.345E-7	.	.	.	.	1	PPM	LB/DAY
MANGANESE,TOTAL (7439-96-5)	___	___	<0.02	<0.00001669	.	.	.	.	1	PPM	LB/DAY
TIN,TOTAL (7440-31-5)	___	___	<0.005	<4.1725E-6	.	.	.	.	1	PPM	LB/DAY
TITANIUM,TOTAL (7440-32-6)	___	___	<0.01	<8.345E-6	.	.	.	.	1	PPM	LB/DAY

CONTINUED FROM PAGE V2

EPA I.D. NUMBER= VA0004090 OUTFALL 118

1. POLLUTANT	MARK X TESTING REQUIRED	BELIEVED PRESENT	BELIEVED ABSENT	2. EFFLUENT A. MAXIMUM DAILY VALUE CONCENTRATION	A. MAXIMUM DAILY VALUE MASS	B. MAXIMUM 30 DAY VALUE CONCENTRATION	B. MAXIMUM 30 DAY VALUE MASS	C. LONG TERM AVRG. VALUE CONCENTRATION	C. LONG TERM AVRG. VALUE MASS	NO. OF ANALYSES	3. UNITS CONCENTRATION	3. UNITS MASS
METALS, CYANIDE, AND TOTAL PHENOLS												
POLLUTANT												
ANTIMONY,TOTAL (7440-36-0)	X			<0.002	<1.669E-6	.	.	.	.	1	PPM	LB/DAY
ARSENIC,TOTAL (7440-38-2)	X			<0.003	<2.5035E-6	.	.	.	.	1	PPM	LB/DAY
BERYLLIUM,TOTAL (7440-41-7)	X			<0.0002	<1.669E-7	.	.	.	.	1	PPM	LB/DAY
CADMIUM,TOTAL (7440-43-9)	X			<0.0003	<2.5035E-7	.	.	.	.	1	PPM	LB/DAY
CHROMIUM,TOTAL (7440-47-3)	X			<0.001	<8.345E-7	.	.	.	.	1	PPM	LB/DAY
COPPER,TOTAL (7440-50-8)	X			0.002	1.669E-6	.	.	.	.	1	PPM	LB/DAY
LEAD,TOTAL (7439-92-1)	X			<0.001	<8.345E-7	.	.	.	.	1	PPM	LB/DAY
MERCURY,TOTAL (7439-97-6)	X			<0.0002	<1.669E-7	.	.	.	.	1	PPM	LB/DAY
NICKEL,TOTAL (7440-02-0)	X			<0.005	<4.1725E-6	.	.	.	.	1	PPM	LB/DAY
SELENIUM,TOTAL (7782-49-2)	X			<0.003	<2.5035E-6	.	.	.	.	1	PPM	LB/DAY
SILVER,TOTAL (7440-22-4)	X			0.0004	3.338E-7	.	.	.	.	1	PPM	LB/DAY
THALLIUM,TOTAL (7440-28-0)	X			<0.002	<1.669E-6	.	.	.	.	1	PPM	LB/DAY
ZINC,TOTAL (7440-66-6)	X			0.033	0.0000275385	.	.	.	.	1	PPM	LB/DAY
CYANIDE , TOTAL (0057-12-5)	X			<0.01	<8.345E-6	.	.	.	.	1	PPM	LB/DAY
PHENOLS , TOTAL	X			<0.01	<8.345E-6	.	.	.	.	1	PPM	LB/DAY

CONTINUED FROM PAGE V3

EPA I.D. NUMBER= VA0004090 OUTFALL 118

	MARK X TESTING REQUIRED	BELIEVED PRESENT	BELIEVED ABSENT	2. EFFLUENT A. MAXIMUM DAILY VALUE CONCENTRATION	A. MASS	B. MAXIMUM 30 DAY VALUE CONCENTRATION	B. MASS	C. LONG TERM AVRG. VALUE CONCENTRATION	C. MASS	NO. OF ANALYSES	3. UNITS CONCENTRATION	MASS
GCMS FRACTION - VOLATILE COMPOUNDS												
ACROLEIN (0107-02-8)	X		X	<0.0408	<0.0000340476	.	.	.	.	1	PPM	LB/DAY
ACRYLONITRILE (0107-13-1)	X		X	<0.0015	<1.25175E-6	.	.	.	.	1	PPM	LB/DAY
BENZENE (0071-43-2)	X		X	<0.0044	<3.6718E-6	.	.	.	.	1	PPM	LB/DAY
BIS (CHLOROMETHYL) ETHER (542-88-1)				NOT SAMPLED		NOT SAMPLED		NOT SAMPLED				
BROMOFORM (0075-25-2)	X		X	<0.0047	<3.92215E-6	.	.	.	.	1	PPM	LB/DAY
CARBON TETRACHLORIDE (0056-23-5)	X		X	<0.0028	<2.3366E-6	.	.	.	.	1	PPM	LB/DAY
CHLOROBENZENE (0108-90-7)	X		X	<0.006	<5.007E-6	.	.	.	.	1	PPM	LB/DAY
DIBROMOCHLOROMETHANE (0124-48-1)	X		X	<0.0031	<2.58695E-6	.	.	.	.	1	PPM	LB/DAY
CHLOROETHANE (0075-00-3)	X		X	<0.0011	<9.1795E-7	.	.	.	.	1	PPM	LB/DAY
2-CHLOROETHYLVINYL ETHER (0110-75-8)	X		X	<0.0012	<1.0014E-6	.	.	.	.	1	PPM	LB/DAY
CHLOROFORM (0067-66-3)	X		X	<0.0016	<1.3352E-6	.	.	.	.	1	PPM	LB/DAY
BROMODICHLOROMETHANE (0075-27-4)	X		X	<0.0022	<1.8359E-6	.	.	.	.	1	PPM	LB/DAY
1,1-DICHLOROETHANE (0075-34-3)	X		X	<0.0047	<3.92215E-6	.	.	.	.	1	PPM	LB/DAY
1,2-DICHLOROETHANE (0107-06-2)	X		X	<0.0028	<2.3366E-6	.	.	.	.	1	PPM	LB/DAY
1,1-DICHLOROETHENE (0075-35-4)	X		X	<0.0028	<2.3366E-6	.	.	.	.	1	PPM	LB/DAY
1,2-DICHLOROPROPANE (0078-87-5)	X		X	<0.006	<5.007E-6	.	.	.	.	1	PPM	LB/DAY
TRANS-1,3-DICHLOROPROPENE (10061026)	X		X	<0.0009	<7.5105E-7	.	.	.	.	1	PPM	LB/DAY
ETHYL BENZENE (0100-41-4)	X		X	<0.0072	<6.0084E-6	.	.	.	.	1	PPM	LB/DAY
BROMOMETHANE (0074-83-9)	X		X	<0.0014	<1.1683E-6	.	.	.	.	1	PPM	LB/DAY
CHLOROMETHANE (0074-87-3)	X		X	<0.0011	<9.1795E-7	.	.	.	.	1	PPM	LB/DAY

CONTINUED FROM PAGE V4

EPA I.D. NUMBER= VA0004090 OUTFALL 118

	MARK X TESTING REQUIRED	BELIEVED PRESENT	BELIEVED ABSENT	2. EFFLUENT A. MAXIMUM DAILY VALUE CONCENTRATION	A. MASS	B. MAXIMUM 30 DAY VALUE CONCENTRATION	B. MASS	C. LONG TERM AVRG. VALUE CONCENTRATION	C. MASS	NO. OF ANALYSES	3. UNITS CONCENTRATION	MASS
GCMS FRACTION - VOLATILE COMPOUNDS (CONT												
METHYLENE CHLORIDE (0075-09-2)	X		X	<0.0028	<2.3366E-6	.	.	.	.	1	PPM	LB/DAY
1,1,2,2-TETRACHLOROETHANE (0079-34-5)	X		X	<0.0069	<5.75805E-6	.	.	.	.	1	PPM	LB/DAY
TETRACHLOROETHENE (0127-18-4)	X		X	<0.0041	<3.42145E-6	.	.	.	.	1	PPM	LB/DAY
TOLUENE (0108-88-3)	X		X	<0.006	<5.007E-6	.	.	.	.	1	PPM	LB/DAY
1 2-TRANS-DICHLOROETHYLENE (0156-60-5)	X		X	<0.0016	<1.3352E-6	.	.	.	.	1	PPM	LB/DAY
1,1,1-TRICHLOROETHANE (0071-55-6)	X		X	<0.0038	<3.1711E-6	.	.	.	.	1	PPM	LB/DAY
1,1,2-TRICHLOROETHANE (0079-00-5)	X		X	<0.005	<4.1725E-6	.	.	.	.	1	PPM	LB/DAY
TRICHLOROETHENE (0079-01-6)	X		X	<0.0019	<1.58555E-6	.	.	.	.	1	PPM	LB/DAY
TRICHLOROFLUOROMETHANE (75-69-4)				NOT SAMPLED		NOT SAMPLED		NOT SAMPLED				
VINYL CHLORIDE (0075-01-4)	X		X	<0.0018	<1.5021E-6	.	.	.	.	1	PPM	LB/DAY
GCMS FRACTION - ACID COMPOUNDS												
2-CHLOROPHENOL (0095-57-8)	X		X	<0.0033	<2.75385E-6	.	.	.	.	1	PPM	LB/DAY
2,4-DICHLOROPHENOL (0120-83-2)	X		X	<0.0056	<4.6732E-6	.	.	.	.	1	PPM	LB/DAY
2,4-DIMETHYLPHENOL (0105-67-9)	X		X	<0.0052	<4.3394E-6	.	.	.	.	1	PPM	LB/DAY
4,6-DINITRO-2-METHYLPHENOL (0534-52-1)	X		X	<0.024	<0.000020028	.	.	.	.	1	PPM	LB/DAY
2,4-DINITROPHENOL (0051-28-5)	X		X	<0.042	<0.000035049	.	.	.	.	1	PPM	LB/DAY
2-NITROPHENOL (0088-75-5)	X		X	<0.0036	<3.0042E-6	.	.	.	.	1	PPM	LB/DAY
4-NITROPHENOL (0100-02-7)	X		X	<0.0024	<2.0028E-6	.	.	.	.	1	PPM	LB/DAY
4-CHLORO-3-METHYLPHENOL (0059-50-7)	X		X	<0.0075	<6.25875E-6	.	.	.	.	1	PPM	LB/DAY
PENTACHLOROPHENOL (0087-86-5)	X		X	<0.0036	<3.0042E-6	.	.	.	.	1	PPM	LB/DAY
PHENOL (0108-95-2)	X		X	<0.0027	<2.25315E-6	.	.	.	.	1	PPM	LB/DAY
2,4,6-TRICHLOROPHENOL (0088-06-2)	X		X	<0.0027	<2.25315E-6	.	.	.	.	1	PPM	LB/DAY

CONTINUED FROM PAGE V5

EPA I.D. NUMBER= VA0004090 OUTFALL 118

	MARK X TESTING REQUIRED	BELIEVED PRESENT	BELIEVED ABSENT	2. EFFLUENT A. MAXIMUM DAILY VALUE CONCENTRATION	A. MASS	B. MAXIMUM 30 DAY VALUE CONCENTRATION	B. MASS	C. LONG TERM AVRG. VALUE CONCENTRATION	C. MASS	3. UNITS NO. OF ANALYSES	CONCENTRATION	MASS
GCMS FRACTION - BASE/NEUTRAL COMPOUNDS												
ACENAPHTHENE (0083-32-9)	X		X	<0.003	<2.5035E-6	.	.	.	.	1	PPM	LB/DAY
ACENAPHTHYLENE (0208-96-8)	X		X	<0.0035	<2.92075E-6	.	.	.	.	1	PPM	LB/DAY
ANTHRACENE (0120-12-7)	X		X	<0.0019	<1.58555E-6	.	.	.	.	1	PPM	LB/DAY
BENZIDINE (0092-87-5)	X		X	<0.063	<0.0000525735	.	.	.	.	1	PPM	LB/DAY
BENZO(A)ANTHRACENE (0056-55-3)	X		X	<0.0165	<0.0000137693	.	.	.	.	1	PPM	LB/DAY
BENZO(A)PYRENE (0050-32-8)	X		X	<0.0025	<2.08625E-6	.	.	.	.	1	PPM	LB/DAY
BENZO(B)FLUORANTHENE (0205-99-2)	X		X	<0.0048	<4.0056E-6	.	.	.	.	1	PPM	LB/DAY
BENZO(G H I)PERYLENE (0191-24-2)	X		X	<0.0041	<3.42145E-6	.	.	.	.	1	PPM	LB/DAY
BENZO(K)FLUORANTHENE (0207-08-9)	X		X	<0.0025	<2.08625E-6	.	.	.	.	1	PPM	LB/DAY
BIS(2-CHLOROETHOXY)METHANE (0111-91-1)	X		X	<0.0053	<4.42285E-6	.	.	.	.	1	PPM	LB/DAY
BIS(-2-CHLOROETHYL)ETHER (0111-44-4)	X		X	<0.0057	<4.75665E-6	.	.	.	.	1	PPM	LB/DAY
BIS(2-CHLOROISOPROPYL)ETHER (102-60-1)				NOT SAMPLED		NOT SAMPLED		NOT SAMPLED				
BIS(2-ETHYLHEXYL)PHTHALATE (0117-81-7)	X		X	<0.0025	<2.08625E-6	.	.	.	.	1	PPM	LB/DAY
4-BROMOPHENYL-PHENYLETHER (0101-55-3)	X		X	<0.003	<2.5035E-6	.	.	.	.	1	PPM	LB/DAY
BUTYLBENZYLPHTHALATE (0085-68-7)	X		X	<0.0025	<2.08625E-6	.	.	.	.	1	PPM	LB/DAY
2-CHLORONAPTHALENE (0091-58-7)	X		X	<0.0046	<3.8387E-6	.	.	.	.	1	PPM	LB/DAY
4-CHLOROPHENYL-PHENYLETHER (7005-72-3)	X		X	<0.0042	<3.5049E-6	.	.	.	.	1	PPM	LB/DAY
CHRYSENE (0218-01-9)	X		X	<0.0025	<2.08625E-6	.	.	.	.	1	PPM	LB/DAY
DIBENZO(A H)ANTHRANCENE (0053-70-3)	X		X	<0.0025	<2.08625E-6	.	.	.	.	1	PPM	LB/DAY
1,2-DICHLOROBENZENE (0095-50-1)	X		X	<0.004	<3.338E-6	.	.	.	.	1	PPM	LB/DAY
1,3-DICHLOROBENZENE (0541-73-1)	X		X	<0.0031	<2.58695E-6	.	.	.	.	1	PPM	LB/DAY

CONTINUED FROM PAGE V6

EPA I.D. NUMBER= VA0004090 OUTFALL 118

	MARK X TESTING REQUIRED	BELIEVED PRESENT	BELIEVED ABSENT	2. EFFLUENT A. MAXIMUM DAILY VALUE CONCENTRATION	A. MASS	B. MAXIMUM 30 DAY VALUE CONCENTRATION	B. MASS	C. LONG TERM AVRG. VALUE CONCENTRATION	C. MASS	NO. OF ANALYSES	3. UNITS CONCENTRATION	MASS
GCMS FRACTION - BASE/NEUTRAL COMP.(CONT)												
1,4-DICHLOROBENZENE (0106-46-7)	X		X	<0.0044	<3.6718E-6	.	.	.	.	1	PPM	LB/DAY
3,3PR-DICHLOROBENZIDINE (0091-94-1)	X		X	<0.0078	<6.5091E-6	.	.	.	.	1	PPM	LB/DAY
DIETHYLPHTHALATE (0084-66-2)	X		X	<0.0074	<6.1753E-6	.	.	.	.	1	PPM	LB/DAY
DIMETHYL PHTHALATE (0131-11-3)	X		X	<0.0075	<6.25875E-6	.	.	.	.	1	PPM	LB/DAY
DI-N-BUTYLPHTHALATE (0084-74-2)	X		X	<0.0064	<5.3408E-6	.	.	.	.	1	PPM	LB/DAY
2,4-DINITROTOLUENE (0121-14-2)	X		X	<0.0057	<4.75665E-6	.	.	.	.	1	PPM	LB/DAY
2,6-DINITROTOLUENE (0606-20-2)	X		X	<0.0034	<2.8373E-6	.	.	.	.	1	PPM	LB/DAY
DI-N-OCTYLPHTHALATE (0117-84-0)	X		X	<0.0025	<2.08625E-6	.	.	.	.	1	PPM	LB/DAY
1,2-DIPHENYLHYDRAZINE (0122-66-7)	X		X	<0.0088	<7.3436E-6	.	.	.	.	1	PPM	LB/DAY
FLUORANTHENE (0206-44-0)	X		X	<0.0022	<1.8359E-6	.	.	.	.	1	PPM	LB/DAY
FLUORENE (0086-73-7)	X		X	<0.0022	<1.8359E-6	.	.	.	.	1	PPM	LB/DAY
HEXACHLOROBENZENE (0118-74-1)	X		X	<0.0031	<2.58695E-6	.	.	.	.	1	PPM	LB/DAY
HEXACHLOROBUTADIENE (0087-68-3)	X		X	<0.0018	<1.5021E-6	.	.	.	.	1	PPM	LB/DAY
HEXACHLOROCYCLOPENTADIENE (0077-47-4)	X		X	<0.02	<0.00001669	.	.	.	.	1	PPM	LB/DAY
HEXACHLOROETHANE (0067-72-1)	X		X	<0.0024	<2.0028E-6	.	.	.	.	1	PPM	LB/DAY
INDENO(1,2,3-CD)PYRENE (0193-39-5)	X		X	<0.0037	<3.08765E-6	.	.	.	.	1	PPM	LB/DAY
ISOPHORONE (0078-59-1)	X		X	<0.0051	<4.25595E-6	.	.	.	.	1	PPM	LB/DAY
NAPHTHALENE (0091-20-3)	X		X	<0.0038	<3.1711E-6	.	.	.	.	1	PPM	LB/DAY
NITROBENZENE (0098-95-3)	X		X	<0.0042	<3.5049E-6	.	.	.	.	1	PPM	LB/DAY
N,NITROSODIMETHYLAMINE (0062-75-9)	X		X	<0.0062	<5.1739E-6	.	.	.	.	1	PPM	LB/DAY
N-NITROSO-DI-N-PROPYLAMINE (0621-64-7)	X		X	<0.0036	<3.0042E-6	.	.	.	.	1	PPM	LB/DAY

CONTINUED FROM PAGE V7

EPA I.D. NUMBER= VA0004090 OUTFALL 118

	MARK X TESTING REQUIRED	BELIEVED PRESENT	BELIEVED ABSENT	2. EFFLUENT A. MAXIMUM DAILY VALUE CONCENTRATION	A. MASS	B. MAXIMUM 30 DAY VALUE CONCENTRATION	B. MASS	C. LONG TERM AVRG. VALUE CONCENTRATION	C. MASS	NO. OF ANALYSES	3. UNITS CONCENTRATION	MASS
GCMS FRACTION - BASE/NEUTRAL COMP (CONT)												
N-NITROSODIPHENYLAMINE (0086-30-6)	X		X	<0.0027	<2.25315E-6	.	.	.	.	1	PPM	LB/DAY
PHENANTHRENE (0085-01-8)	X		X	<0.0054	<4.5063E-6	.	.	.	.	1	PPM	LB/DAY
PYRENE (0129-00-0)	X		X	<0.0038	<3.1711E-6	.	.	.	.	1	PPM	LB/DAY
1,2,4-TRICHLORBENZENE (0120-82-1)	X		X	<0.0079	<6.59255E-6	.	.	.	.	1	PPM	LB/DAY
GCMS FRACTION - PESTICIDES												
ALDRIN (0309-00-2)			X	<0.0019	<1.58555E-6	.	.	.	.	1	PPM	LB/DAY
ALPHA BHC (0319-84-6)			X	<0.0031	<2.58695E-6	.	.	.	.	1	PPM	LB/DAY
BETA BHC (0319-85-7)			X	<0.0042	<3.5049E-6	.	.	.	.	1	PPM	LB/DAY
GAMMA BHC (0058-89-9)			X	<0.0022	<1.8359E-6	.	.	.	.	1	PPM	LB/DAY
DELTA BHC (0319-86-8)			X	<0.0052	<4.3394E-6	.	.	.	.	1	PPM	LB/DAY
CHLORDANE (0057-74-9)			X	<0.01	<8.345E-6	.	.	.	.	1	PPM	LB/DAY
4,4PR-DDT (0050-29-3)			X	<0.0051	<4.25595E-6	.	.	.	.	1	PPM	LB/DAY
4,4PR-DDE (0072-55-9)			X	<0.0056	<4.6732E-6	.	.	.	.	1	PPM	LB/DAY
4,4PR-DDD (0072-54-8)			X	<0.0041	<3.42145E-6	.	.	.	.	1	PPM	LB/DAY
DIELDRIN (0060-57-1)			X	<0.0044	<3.6718E-6	.	.	.	.	1	PPM	LB/DAY
ALPHA-ENDOSULFAN (0115-29-7)			X	<0.0617	<0.0000514887	.	.	.	.	1	PPM	LB/DAY
BETA-ENDOSULFAN (0115-29-7)			X	<0.0803	<0.0000670104	.	.	.	.	1	PPM	LB/DAY
ENDOSULFAN SULFATE (1031-07-8)			X	<0.0056	<4.6732E-6	.	.	.	.	1	PPM	LB/DAY
ENDRIN (0072-20-8)			X	<0.0056	<4.6732E-6	.	.	.	.	1	PPM	LB/DAY
ENDRIN ALDEHYDE (7421-93-4)			X	<0.065	<0.0000542425	.	.	.	.	1	PPM	LB/DAY
HEPTACHLOR (0076-44-8)			X	<0.0043	<3.58835E-6	.	.	.	.	1	PPM	LB/DAY

CONTINUED FROM PAGE V8

EPA I.D. NUMBER= VA0004090 OUTFALL 118

	MARK X TESTING REQUIRED	BELIEVED PRESENT	BELIEVED ABSENT	2. EFFLUENT A. MAXIMUM DAILY VALUE CONCENTRATION	A. MASS	B. MAXIMUM 30 DAY VALUE CONCENTRATION	B. MASS	C. LONG TERM AVRG. VALUE CONCENTRATION	C. MASS	NO. OF ANALYSES	3. UNITS CONCENTRATION	MASS
GCMS FRACTION - PESTICIDES (CONTINUED)												
HEPTACHLOR EPOXIDE (1025-57-3)	____	____	__X__	<0.0022	<1.8359E-6	.	.	.	.	1	PPM	LB/DAY
PCB 1242 (53469219)	____	____	__X__	<0.05	<0.000041725	.	.	.	.	1	PPM	LB/DAY
PCB 1254 (11097691)	____	____	__X__	<0.036	<0.000030042	.	.	.	.	1	PPM	LB/DAY
PCB 1221 (11104282)	____	____	__X__	<0.03	<0.000025035	.	.	.	.	1	PPM	LB/DAY
PCB 1232 (11141165)	____	____	__X__	<0.05	<0.000041725	.	.	.	.	1	PPM	LB/DAY
PCB 1248 (12672296)	____	____	__X__	<0.05	<0.000041725	.	.	.	.	1	PPM	LB/DAY
PCB 1260 (11096825)	____	____	__X__	<0.05	<0.000041725	.	.	.	.	1	PPM	LB/DAY
PCB 1016 (12674112)	____	____	__X__	<0.05	<0.000041725	.	.	.	.	1	PPM	LB/DAY
TOXAPHENE (8001-35-2)	____	____	__X__	<0.05	<0.000041725	.	.	.	.	1	PPM	LB/DAY

EPA I.D. NUMBER= VA0004090

OUTFALL 119

V. INTAKE AND EFFLUENT CHARACTERISTICS (CONTINUED FROM PAGE 3 OF FORM 2C)

PART A- YOU MUST PROVIDE THE RESULTS OF AT LEAST ONE ANALYSIS FOR EVERY POLLUTANT IN THIS TABLE. COMPLETE ONE TABLE FOR EACH OUTFALL. SEE INSTRUCTIONS FOR ADDITIONAL DETAILS

	2. EFFLUENT							3. UNITS	
	A. MAXIMUM DAILY VALUE		B. MAXIMUM 30 DAY VALUE		C. LONG TERM AVRG. VALUE				
POLLUTANT	CONCENTRATION	MASS	CONCENTRATION	MASS	CONCENTRATION	MASS	NO. OF ANALYSES	CONCENTRATION	MASS
TOTAL SUSPENDED SOLIDS	.	.	<0.1	<0.0751	<0.1	<0.0751	2	PPM	LB/DAY
FLOW	.	.	0.09	.	0.09	.	2	MGD	.
PH	.	.	7.28 (MIN)	7.59 (MAX)	N/A	N/A	2	STD. UNITS	.

PART B.

	MARK X		2. EFFLUENT						3. UNITS	
			A. MAXIMUM DAILY VALUE		B. MAXIMUM 30 DAY VALUE		C. LONG TERM AVRG. VALUE			
	BELIEVED PRESENT	BELIEVED ABSENT	CONCENTRATION	MASS	CONCENTRATION	MASS	CONCENTRATION	MASS	NO. OF ANALYSES	CONCENTRATION	MASS

ITEM V-B CONTINUED
PART C.

EPA I.D. NUMBER= VA0004090 OUTFALL 119

1. POLLUTANT	MARK X BELIEVED PRESENT	MARK X BELIEVED ABSENT	2. EFFLUENT A. MAXIMUM DAILY VALUE CONCENTRATION	A. MAXIMUM DAILY VALUE MASS	B. MAXIMUM 30 DAY VALUE CONCENTRATION	B. MAXIMUM 30 DAY VALUE MASS	C. LONG TERM AVRG. VALUE CONCENTRATION	C. LONG TERM AVRG. VALUE MASS	NO. OF ANALYSES	3. UNITS CONCENTRATION	3. UNITS MASS
POLLUTANT											
OIL & GREASE	____	____	.	.	<5	<3.7552	<5	<3.7552	2	PPM	LB/DAY

EPA I.D. NUMBER= VA0004090

OUTFALL 120

V. INTAKE AND EFFLUENT CHARACTERISTICS (CONTINUED FROM PAGE 3 OF FORM 2C)

PART A- YOU MUST PROVIDE THE RESULTS OF AT LEAST ONE ANALYSIS FOR EVERY POLLUTANT IN THIS TABLE. COMPLETE ONE TABLE FOR EACH OUTFALL. SEE INSTRUCTIONS FOR ADDITIONAL DETAILS

	2. EFFLUENT							3. UNITS	
	A. MAXIMUM DAILY VALUE		B. MAXIMUM 30 DAY VALUE		C. LONG TERM AVRG. VALUE				
POLLUTANT	CONCENTRATION	MASS	CONCENTRATION	MASS	CONCENTRATION	MASS	NO. OF ANALYSES	CONCENTRATION	MASS
BIOCHEMICAL OXYGEN DEMAND	<2	<0.63422	.	.	.	.	1	PPM	LB/DAY
CHEMICAL OXYGEN DEMAND	<5	<1.58555	.	.	.	.	1	PPM	LB/DAY
TOTAL ORGANIC CARBON	5.2	1.648972	.	.	.	.	1	PPM	LB/DAY
TOTAL SUSPENDED SOLIDS	.	.	<2.3	<0.7294	<2.3	<0.7294	2	PPM	LB/DAY
AMMONIA,TOTAL	0.18	0.0570798	.	.	.	.	1	PPM	LB/DAY
FLOW	0.038	.	.	.	.	.	1	MGD	.
TEMPERATURE (SUMMER)	26	.	.	.	.	.	1	DEGREES C	.
PH	.	.	5.05 (MIN)	8.1 (MAX)	N/A	N/A	2	STD. UNITS	.

PART B.

	MARK X		2. EFFLUENT					3. UNITS	
			A. MAXIMUM DAILY VALUE		B. MAXIMUM 30 DAY VALUE		C. LONG TERM AVRG. VALUE		
	BELIEVED PRESENT	BELIEVED ABSENT	CONCENTRATION	MASS	CONCENTRATION	MASS	CONCENTRATION	MASS	NO. OF ANALYSES	CONCENTRATION	MASS
BROMIDE,TOTAL (24959-67-6)	____	____	<0.2	<0.063422	.	.	.	.	1	PPM	LB/DAY
CHLORINE, TOTAL RESIDUAL	____	__X__	NOT SAMPLED		NOT SAMPLED						
COLOR	____	____	60	N/A	.	.	.	.	1	NTU	.
FECAL COLIFORM	____	__X__	NOT SAMPLED		NOT SAMPLED						
FLUORIDE (16984-48-8)	____	____	1.691	0.53623301	.	.	.	.	1	PPM	LB/DAY
NITRATE + NITRITE	____	____	0.01	0.0031711	.	.	.	.	1	PPM	LB/DAY

CAS=. SITE=120 MONTH=8 YEAR=2000 PARAMTR=COLOR FLOW=0.038 _FREQ_=1 SAMPLES=. MAXDAYLD=N/A MAXDAYCN=60 LTALOAD=. LTACONC=. MAX30LD=. MAX30CN=. ORDER=13 UNITSM=. UNITS=NTU INTAKEN=

INTAKEC= INTAKEMS= PAGE=V1 GROUP=POLLUTANT FIRST.SITE=0 LAST.SITE=0 FIRST.PAGE=0 LAST.PAGE=0 FIRST.GROUP=0 LAST.GROUP=0 _I_=. CHECK=0.263422 I=. FILLIT= _ERROR_=0 _N_=1233

ITEM V-B CONTINUED
PART C.

EPA I.D. NUMBER= VA0004090 OUTFALL 120

1. POLLUTANT	MARK X BELIEVED PRESENT	MARK X BELIEVED ABSENT	2. EFFLUENT A. MAXIMUM DAILY VALUE CONCENTRATION	A. MAXIMUM DAILY VALUE MASS	B. MAXIMUM 30 DAY VALUE CONCENTRATION	B. MAXIMUM 30 DAY VALUE MASS	C. LONG TERM AVRG. VALUE CONCENTRATION	C. LONG TERM AVRG. VALUE MASS	NO. OF ANALYSES	3. UNITS CONCENTRATION	3. UNITS MASS
POLLUTANT											
NITROGEN, TOTAL ORG. AS N	____	____	<0.01	<0.0031711	.	.	.	.	1	PPM	LB/DAY
OIL & GREASE	____	____	.	.	<5	<1.5855	<5	<1.5855	2	PPM	LB/DAY
PHOSPHORUS (AS P), TOTAL (7723-14-0)	____	____	0.01	0.0031711	.	.	.	.	1	PPM	LB/DAY
J. RADIOACTIVITY **********											
ALPHA, TOTAL	____	____	<0.3	.	.	.	.	.	1	PPM	LB/DAY
BETA, TOTAL	____	____	<0.7	.	.	.	.	.	1	PPM	LB/DAY
RADIUM,TOTAL	____	____	<0.5	<0.158555	.	.	.	.	1	PPM	LB/DAY
RADIUM 226 , TOTAL	____	____	0.2	0.063422	.	.	.	.	1	PPM	LB/DAY
SULFATE (AS SO4)	____	____	1.82	0.5771402	.	.	.	.	1	PPM	LB/DAY
SULFIDE (AS S)	____	____	0.01	0.0031711	.	.	.	.	1	PPM	LB/DAY
SURFACTANTS	____	____	<0.025	<0.00792775	.	.	.	.	1	PPM	LB/DAY
ALUMINUM,TOTAL (7429-90-5)	____	____	<0.2	<0.063422	.	.	.	.	1	PPM	LB/DAY
BARIUM,TOTAL (7440-39-3)	____	____	<0.003	<0.00095133	.	.	.	.	1	PPM	LB/DAY
BORON,TOTAL (7440-42-8)	____	____	<0.02	<0.0063422	.	.	.	.	1	PPM	LB/DAY
COBALT,TOTAL (7440-48-4)	____	____	<0.003	<0.00095133	.	.	.	.	1	PPM	LB/DAY
IRON,TOTAL (7439-89-6)	____	____	0.56	0.1775816	.	.	.	.	1	PPM	LB/DAY
MAGNESIUM,TOTAL (7439-95-4)	____	____	<0.01	<0.0031711	.	.	.	.	1	PPM	LB/DAY
MOLYBDENUM,TOTAL (7439-98-7)	____	____	<0.001	<0.00031711	.	.	.	.	1	PPM	LB/DAY
MANGANESE,TOTAL (7439-96-5)	____	____	<0.02	<0.0063422	.	.	.	.	1	PPM	LB/DAY
TIN,TOTAL (7440-31-5)	____	____	<0.005	<0.00158555	.	.	.	.	1	PPM	LB/DAY
TITANIUM,TOTAL (7440-32-6)	____	____	<0.01	<0.0031711	.	.	.	.	1	PPM	LB/DAY

CONTINUED FROM PAGE V2

EPA I.D. NUMBER= VA0004090 OUTFALL 120

1. POLLUTANT	MARK X TESTING REQUIRED	BELIEVED PRESENT	BELIEVED ABSENT	2. EFFLUENT A. MAXIMUM DAILY VALUE CONCENTRATION	A. MAXIMUM DAILY VALUE MASS	B. MAXIMUM 30 DAY VALUE CONCENTRATION	B. MAXIMUM 30 DAY VALUE MASS	C. LONG TERM AVRG. VALUE CONCENTRATION	C. LONG TERM AVRG. VALUE MASS	NO. OF ANALYSES	3. UNITS CONCENTRATION	3. UNITS MASS
METALS, CYANIDE, AND TOTAL PHENOLS												
POLLUTANT												
ANTIMONY,TOTAL (7440-36-0)	X			0.002	0.00063422	.	.	.	.	1	PPM	LB/DAY
ARSENIC,TOTAL (7440-38-2)	X			<0.003	<0.00095133	.	.	.	.	1	PPM	LB/DAY
BERYLLIUM,TOTAL (7440-41-7)	X			<0.0002	<0.000063422	.	.	.	.	1	PPM	LB/DAY
CADMIUM,TOTAL (7440-43-9)	X			<0.0003	<0.000095133	.	.	.	.	1	PPM	LB/DAY
CHROMIUM,TOTAL (7440-47-3)	X			0.001	0.00031711	.	.	.	.	1	PPM	LB/DAY
COPPER,TOTAL (7440-50-8)	X			0.017	0.00539087	.	.	.	.	1	PPM	LB/DAY
LEAD,TOTAL (7439-92-1)	X			0.003	0.00095133	.	.	.	.	1	PPM	LB/DAY
MERCURY,TOTAL (7439-97-6)	X			<0.0002	<0.000063422	.	.	.	.	1	PPM	LB/DAY
NICKEL,TOTAL (7440-02-0)	X			<0.005	<0.00158555	.	.	.	.	1	PPM	LB/DAY
SELENIUM,TOTAL (7782-49-2)	X			<0.003	<0.00095133	.	.	.	.	1	PPM	LB/DAY
SILVER,TOTAL (7440-22-4)	X			0.0004	0.000126844	.	.	.	.	1	PPM	LB/DAY
THALLIUM,TOTAL (7440-28-0)	X			<0.002	<0.00063422	.	.	.	.	1	PPM	LB/DAY
ZINC,TOTAL (7440-66-6)	X			0.01	0.0031711	.	.	.	.	1	PPM	LB/DAY
CYANIDE , TOTAL (0057-12-5)	X			<0.01	<0.0031711	.	.	.	.	1	PPM	LB/DAY
PHENOLS , TOTAL	X			<0.01	<0.0031711	.	.	.	.	1	PPM	LB/DAY

CONTINUED FROM PAGE V3

EPA I.D. NUMBER= VA0004090 OUTFALL 120

	MARK X TESTING REQUIRED	BELIEVED PRESENT	BELIEVED ABSENT	2. EFFLUENT A. MAXIMUM DAILY VALUE CONCENTRATION	A. MASS	B. MAXIMUM 30 DAY VALUE CONCENTRATION	B. MASS	C. LONG TERM AVRG. VALUE CONCENTRATION	C. MASS	NO. OF ANALYSES	3. UNITS CONCENTRATION	MASS
GCMS FRACTION - VOLATILE COMPOUNDS												
ACROLEIN (0107-02-8)	X		X	<0.0408	<0.012938088	.	.	.	.	1	PPM	LB/DAY
ACRYLONITRILE (0107-13-1)	X		X	<0.0015	<0.000475665	.	.	.	.	1	PPM	LB/DAY
BENZENE (0071-43-2)	X		X	<0.0044	<0.001395284	.	.	.	.	1	PPM	LB/DAY
BIS (CHLOROMETHYL) ETHER (542-88-1)				NOT SAMPLED		NOT SAMPLED		NOT SAMPLED				
BROMOFORM (0075-25-2)	X		X	<0.0047	<0.001490417	.	.	.	.	1	PPM	LB/DAY
CARBON TETRACHLORIDE (0056-23-5)	X		X	<0.0028	<0.000887908	.	.	.	.	1	PPM	LB/DAY
CHLOROBENZENE (0108-90-7)	X		X	<0.006	<0.00190266	.	.	.	.	1	PPM	LB/DAY
DIBROMOCHLOROMETHANE (0124-48-1)	X		X	<0.0031	<0.000983041	.	.	.	.	1	PPM	LB/DAY
CHLOROETHANE (0075-00-3)	X		X	<0.0011	<0.000348821	.	.	.	.	1	PPM	LB/DAY
2-CHLOROETHYLVINYL ETHER (0110-75-8)	X		X	<0.0012	<0.000380532	.	.	.	.	1	PPM	LB/DAY
CHLOROFORM (0067-66-3)	X		X	<0.0016	<0.000507376	.	.	.	.	1	PPM	LB/DAY
BROMODICHLOROMETHANE (0075-27-4)	X		X	<0.0022	<0.000697642	.	.	.	.	1	PPM	LB/DAY
1,1-DICHLOROETHANE (0075-34-3)	X		X	<0.0047	<0.001490417	.	.	.	.	1	PPM	LB/DAY
1,2-DICHLOROETHANE (0107-06-2)	X		X	<0.0028	<0.000887908	.	.	.	.	1	PPM	LB/DAY
1,1-DICHLOROETHENE (0075-35-4)	X		X	<0.0028	<0.000887908	.	.	.	.	1	PPM	LB/DAY
1,2-DICHLOROPROPANE (0078-87-5)	X		X	<0.006	<0.00190266	.	.	.	.	1	PPM	LB/DAY
TRANS-1,3-DICHLOROPROPENE (10061026)	X		X	<0.0009	<0.000285399	.	.	.	.	1	PPM	LB/DAY
ETHYL BENZENE (0100-41-4)	X		X	<0.0072	<0.002283192	.	.	.	.	1	PPM	LB/DAY
BROMOMETHANE (0074-83-9)	X		X	<0.0014	<0.000443954	.	.	.	.	1	PPM	LB/DAY
CHLOROMETHANE (0074-87-3)	X		X	<0.0011	<0.000348821	.	.	.	.	1	PPM	LB/DAY

CONTINUED FROM PAGE V4

EPA I.D. NUMBER= VA0004090 OUTFALL 120

	MARK X TESTING REQUIRED	BELIEVED PRESENT	BELIEVED ABSENT	2. EFFLUENT A. MAXIMUM DAILY VALUE CONCENTRATION	A. MASS	B. MAXIMUM 30 DAY VALUE CONCENTRATION	B. MASS	C. LONG TERM AVRG. VALUE CONCENTRATION	C. MASS	NO. OF ANALYSES	3. UNITS CONCENTRATION	MASS
GCMS FRACTION - VOLATILE COMPOUNDS (CONT												
METHYLENE CHLORIDE (0075-09-2)	X		X	<0.0028	<0.000887908	.	.	.	.	1	PPM	LB/DAY
1,1,2,2-TETRACHLOROETHANE (0079-34-5)	X		X	<0.0069	<0.002188059	.	.	.	.	1	PPM	LB/DAY
TETRACHLOROETHENE (0127-18-4)	X		X	<0.0041	<0.001300151	.	.	.	.	1	PPM	LB/DAY
TOLUENE (0108-88-3)	X		X	<0.006	<0.00190266	.	.	.	.	1	PPM	LB/DAY
1 2-TRANS-DICHLOROETHYLENE (0156-60-5)	X		X	<0.0016	<0.000507376	.	.	.	.	1	PPM	LB/DAY
1,1,1-TRICHLOROETHANE (0071-55-6)	X		X	<0.0038	<0.001205018	.	.	.	.	1	PPM	LB/DAY
1,1,2-TRICHLOROETHANE (0079-00-5)	X		X	<0.005	<0.00158555	.	.	.	.	1	PPM	LB/DAY
TRICHLOROETHENE (0079-01-6)	X		X	<0.0019	<0.000602509	.	.	.	.	1	PPM	LB/DAY
TRICHLOROFLUOROMETHANE (75-69-4)				NOT SAMPLED		NOT SAMPLED		NOT SAMPLED				
VINYL CHLORIDE (0075-01-4)	X		X	<0.0018	<0.000570798	.	.	.	.	1	PPM	LB/DAY
GCMS FRACTION - ACID COMPOUNDS												
2-CHLOROPHENOL (0095-57-8)	X		X	<0.0033	<0.001046463	.	.	.	.	1	PPM	LB/DAY
2,4-DICHLOROPHENOL (0120-83-2)	X		X	<0.0056	<0.001775816	.	.	.	.	1	PPM	LB/DAY
2,4-DIMETHYLPHENOL (0105-67-9)	X		X	<0.0052	<0.001648972	.	.	.	.	1	PPM	LB/DAY
4,6-DINITRO-2-METHYLPHENOL (0534-52-1)	X		X	<0.024	<0.00761064	.	.	.	.	1	PPM	LB/DAY
2,4-DINITROPHENOL (0051-28-5)	X		X	<0.042	<0.01331862	.	.	.	.	1	PPM	LB/DAY
2-NITROPHENOL (0088-75-5)	X		X	<0.0036	<0.001141596	.	.	.	.	1	PPM	LB/DAY
4-NITROPHENOL (0100-02-7)	X		X	<0.0024	<0.000761064	.	.	.	.	1	PPM	LB/DAY
4-CHLORO-3-METHYLPHENOL (0059-50-7)	X		X	<0.0075	<0.002378325	.	.	.	.	1	PPM	LB/DAY
PENTACHLOROPHENOL (0087-86-5)	X		X	<0.0036	<0.001141596	.	.	.	.	1	PPM	LB/DAY
PHENOL (0108-95-2)	X		X	<0.0027	<0.000856197	.	.	.	.	1	PPM	LB/DAY
2,4,6-TRICHLOROPHENOL (0088-06-2)	X		X	<0.0027	<0.000856197	.	.	.	.	1	PPM	LB/DAY

CONTINUED FROM PAGE V5

EPA I.D. NUMBER= VA0004090 OUTFALL 120

	MARK X TESTING REQUIRED	BELIEVED PRESENT	BELIEVED ABSENT	2. EFFLUENT A. MAXIMUM DAILY VALUE CONCENTRATION	A. MASS	B. MAXIMUM 30 DAY VALUE CONCENTRATION	B. MASS	C. LONG TERM AVRG. VALUE CONCENTRATION	C. MASS	NO. OF ANALYSES	3. UNITS CONCENTRATION	MASS
GCMS FRACTION - BASE/NEUTRAL COMPOUNDS												
ACENAPHTHENE (0083-32-9)	X		X	<0.003	<0.00095133	.	.	.	.	1	PPM	LB/DAY
ACENAPHTHYLENE (0208-96-8)	X		X	<0.0035	<0.001109885	.	.	.	.	1	PPM	LB/DAY
ANTHRACENE (0120-12-7)	X		X	<0.0019	<0.000602509	.	.	.	.	1	PPM	LB/DAY
BENZIDINE (0092-87-5)	X		X	<0.063	<0.01997793	.	.	.	.	1	PPM	LB/DAY
BENZO(A)ANTHRACENE (0056-55-3)	X		X	<0.0165	<0.005232315	.	.	.	.	1	PPM	LB/DAY
BENZO(A)PYRENE (0050-32-8)	X		X	<0.0025	<0.000792775	.	.	.	.	1	PPM	LB/DAY
BENZO(B)FLUORANTHENE (0205-99-2)	X		X	<0.0048	<0.001522128	.	.	.	.	1	PPM	LB/DAY
BENZO(G H I)PERYLENE (0191-24-2)	X		X	<0.0041	<0.001300151	.	.	.	.	1	PPM	LB/DAY
BENZO(K)FLUORANTHENE (0207-08-9)	X		X	<0.0025	<0.000792775	.	.	.	.	1	PPM	LB/DAY
BIS(2-CHLOROETHOXY)METHANE (0111-91-1)	X		X	<0.0053	<0.001680683	.	.	.	.	1	PPM	LB/DAY
BIS(-2-CHLOROETHYL)ETHER (0111-44-4)	X		X	<0.0057	<0.001807527	.	.	.	.	1	PPM	LB/DAY
BIS(2-CHLOROISOPROPYL)ETHER (102-60-1)				NOT SAMPLED		NOT SAMPLED		NOT SAMPLED				
BIS(2-ETHYLHEXYL)PHTHALATE (0117-81-7)	X		X	<0.0025	<0.000792775	.	.	.	.	1	PPM	LB/DAY
4-BROMOPHENYL-PHENYLETHER (0101-55-3)	X		X	<0.003	<0.00095133	.	.	.	.	1	PPM	LB/DAY
BUTYLBENZYLPHTHALATE (0085-68-7)	X		X	<0.0025	<0.000792775	.	.	.	.	1	PPM	LB/DAY
2-CHLORONAPTHALENE (0091-58-7)	X		X	<0.0046	<0.001458706	.	.	.	.	1	PPM	LB/DAY
4-CHLOROPHENYL-PHENYLETHER (7005-72-3)	X		X	<0.0042	<0.001331862	.	.	.	.	1	PPM	LB/DAY
CHRYSENE (0218-01-9)	X		X	<0.0025	<0.000792775	.	.	.	.	1	PPM	LB/DAY
DIBENZO(A H)ANTHRANCENE (0053-70-3)	X		X	<0.0025	<0.000792775	.	.	.	.	1	PPM	LB/DAY
1,2-DICHLOROBENZENE (0095-50-1)	X		X	<0.004	<0.00126844	.	.	.	.	1	PPM	LB/DAY
1,3-DICHLOROBENZENE (0541-73-1)	X		X	<0.0031	<0.000983041	.	.	.	.	1	PPM	LB/DAY

CONTINUED FROM PAGE V6

EPA I.D. NUMBER= VA0004090 OUTFALL 120

	MARK X TESTING REQUIRED	BELIEVED PRESENT	BELIEVED ABSENT	2. EFFLUENT A. MAXIMUM DAILY VALUE CONCENTRATION	A. MASS	B. MAXIMUM 30 DAY VALUE CONCENTRATION	B. MASS	C. LONG TERM AVRG. VALUE CONCENTRATION	C. MASS	NO. OF ANALYSES	3. UNITS CONCENTRATION	MASS
GCMS FRACTION - BASE/NEUTRAL COMP.(CONT)												
1,4-DICHLOROBENZENE (0106-46-7)	X		X	<0.0044	<0.001395284	.	.	.	.	1	PPM	LB/DAY
3,3PR-DICHLOROBENZIDINE (0091-94-1)	X		X	<0.0078	<0.002473458	.	.	.	.	1	PPM	LB/DAY
DIETHYLPHTHALATE (0084-66-2)	X		X	<0.0074	<0.002346614	.	.	.	.	1	PPM	LB/DAY
DIMETHYL PHTHALATE (0131-11-3)	X		X	<0.0075	<0.002378325	.	.	.	.	1	PPM	LB/DAY
DI-N-BUTYLPHTHALATE (0084-74-2)	X		X	<0.0064	<0.002029504	.	.	.	.	1	PPM	LB/DAY
2,4-DINITROTOLUENE (0121-14-2)	X		X	<0.0057	<0.001807527	.	.	.	.	1	PPM	LB/DAY
2,6-DINITROTOLUENE (0606-20-2)	X		X	<0.0034	<0.001078174	.	.	.	.	1	PPM	LB/DAY
DI-N-OCTYLPHTHALATE (0117-84-0)	X		X	<0.0025	<0.000792775	.	.	.	.	1	PPM	LB/DAY
1,2-DIPHENYLHYDRAZINE (0122-66-7)	X		X	<0.0088	<0.002790568	.	.	.	.	1	PPM	LB/DAY
FLUORANTHENE (0206-44-0)	X		X	<0.0022	<0.000697642	.	.	.	.	1	PPM	LB/DAY
FLUORENE (0086-73-7)	X		X	<0.0022	<0.000697642	.	.	.	.	1	PPM	LB/DAY
HEXACHLOROBENZENE (0118-74-1)	X		X	<0.0031	<0.000983041	.	.	.	.	1	PPM	LB/DAY
HEXACHLOROBUTADIENE (0087-68-3)	X		X	<0.0018	<0.000570798	.	.	.	.	1	PPM	LB/DAY
HEXACHLOROCYCLOPENTADIENE (0077-47-4)	X		X	<0.02	<0.0063422	.	.	.	.	1	PPM	LB/DAY
HEXACHLOROETHANE (0067-72-1)	X		X	<0.0024	<0.000761064	.	.	.	.	1	PPM	LB/DAY
INDENO(1,2,3-CD)PYRENE (0193-39-5)	X		X	<0.0037	<0.001173307	.	.	.	.	1	PPM	LB/DAY
ISOPHORONE (0078-59-1)	X		X	<0.0051	<0.001617261	.	.	.	.	1	PPM	LB/DAY
NAPHTHALENE (0091-20-3)	X		X	<0.0038	<0.001205018	.	.	.	.	1	PPM	LB/DAY
NITROBENZENE (0098-95-3)	X		X	<0.0042	<0.001331862	.	.	.	.	1	PPM	LB/DAY
N,NITROSODIMETHYLAMINE (0062-75-9)	X		X	<0.0062	<0.001966082	.	.	.	.	1	PPM	LB/DAY
N-NITROSO-DI-N-PROPYLAMINE (0621-64-7)	X		X	<0.0036	<0.001141596	.	.	.	.	1	PPM	LB/DAY

CONTINUED FROM PAGE V7

EPA I.D. NUMBER= VA0004090 OUTFALL 120

	MARK X TESTING REQUIRED	BELIEVED PRESENT	BELIEVED ABSENT	2. EFFLUENT A. MAXIMUM DAILY VALUE CONCENTRATION	A. MASS	B. MAXIMUM 30 DAY VALUE CONCENTRATION	B. MASS	C. LONG TERM AVRG. VALUE CONCENTRATION	C. MASS	NO. OF ANALYSES	3. UNITS CONCENTRATION	MASS
GCMS FRACTION - BASE/NEUTRAL COMP (CONT)												
N-NITROSODIPHENYLAMINE (0086-30-6)	X		X	<0.0027	<0.000856197	.	.	.	.	1	PPM	LB/DAY
PHENANTHRENE (0085-01-8)	X		X	<0.0054	<0.001712394	.	.	.	.	1	PPM	LB/DAY
PYRENE (0129-00-0)	X		X	<0.0038	<0.001205018	.	.	.	.	1	PPM	LB/DAY
1,2,4-TRICHLORBENZENE (0120-82-1)	X		X	<0.0079	<0.002505169	.	.	.	.	1	PPM	LB/DAY
GCMS FRACTION - PESTICIDES												
ALDRIN (0309-00-2)			X	<0.0019	<0.000602509	.	.	.	.	1	PPM	LB/DAY
ALPHA BHC (0319-84-6)			X	<0.0031	<0.000983041	.	.	.	.	1	PPM	LB/DAY
BETA BHC (0319-85-7)			X	<0.0042	<0.001331862	.	.	.	.	1	PPM	LB/DAY
GAMMA BHC (0058-89-9)			X	<0.0022	<0.000697642	.	.	.	.	1	PPM	LB/DAY
DELTA BHC (0319-86-8)			X	<0.0052	<0.001648972	.	.	.	.	1	PPM	LB/DAY
CHLORDANE (0057-74-9)			X	<0.01	<0.0031711	.	.	.	.	1	PPM	LB/DAY
4,4PR-DDT (0050-29-3)			X	<0.0051	<0.001617261	.	.	.	.	1	PPM	LB/DAY
4,4PR-DDE (0072-55-9)			X	<0.0056	<0.001775816	.	.	.	.	1	PPM	LB/DAY
4,4PR-DDD (0072-54-8)			X	<0.0041	<0.001300151	.	.	.	.	1	PPM	LB/DAY
DIELDRIN (0060-57-1)			X	<0.0044	<0.001395284	.	.	.	.	1	PPM	LB/DAY
ALPHA-ENDOSULFAN (0115-29-7)			X	<0.0617	<0.019565687	.	.	.	.	1	PPM	LB/DAY
BETA-ENDOSULFAN (0115-29-7)			X	<0.0803	<0.025463933	.	.	.	.	1	PPM	LB/DAY
ENDOSULFAN SULFATE (1031-07-8)			X	<0.0056	<0.001775816	.	.	.	.	1	PPM	LB/DAY
ENDRIN (0072-20-8)			X	<0.0056	<0.001775816	.	.	.	.	1	PPM	LB/DAY
ENDRIN ALDEHYDE (7421-93-4)			X	<0.065	<0.02061215	.	.	.	.	1	PPM	LB/DAY
HEPTACHLOR (0076-44-8)			X	<0.0043	<0.001363573	.	.	.	.	1	PPM	LB/DAY

CONTINUED FROM PAGE V8

EPA I.D. NUMBER= VA0004090 OUTFALL 120

	MARK X TESTING REQUIRED	BELIEVED PRESENT	BELIEVED ABSENT	2. EFFLUENT A. MAXIMUM DAILY VALUE CONCENTRATION	A. MAXIMUM DAILY VALUE MASS	B. MAXIMUM 30 DAY VALUE CONCENTRATION	B. MAXIMUM 30 DAY VALUE MASS	C. LONG TERM AVRG. VALUE CONCENTRATION	C. LONG TERM AVRG. VALUE MASS	NO. OF ANALYSES	3. UNITS CONCENTRATION	3. UNITS MASS
GCMS FRACTION - PESTICIDES (CONTINUED)												
HEPTACHLOR EPOXIDE (1025-57-3)	____	____	__X__	<0.0022	<0.000697642	.	.	.	.	1	PPM	LB/DAY
PCB 1242 (53469219)	____	____	__X__	<0.05	<0.0158555	.	.	.	.	1	PPM	LB/DAY
PCB 1254 (11097691)	____	____	__X__	<0.036	<0.01141596	.	.	.	.	1	PPM	LB/DAY
PCB 1221 (11104282)	____	____	__X__	<0.03	<0.0095133	.	.	.	.	1	PPM	LB/DAY
PCB 1232 (11141165)	____	____	__X__	<0.05	<0.0158555	.	.	.	.	1	PPM	LB/DAY
PCB 1248 (12672296)	____	____	__X__	<0.05	<0.0158555	.	.	.	.	1	PPM	LB/DAY
PCB 1260 (11096825)	____	____	__X__	<0.05	<0.0158555	.	.	.	.	1	PPM	LB/DAY
PCB 1016 (12674112)	____	____	__X__	<0.05	<0.0158555	.	.	.	.	1	PPM	LB/DAY
TOXAPHENE (8001-35-2)	____	____	__X__	<0.05	<0.0158555	.	.	.	.	1	PPM	LB/DAY

EPA I.D. NUMBER= VA0004090

V. INTAKE AND EFFLUENT CHARACTERISTICS (CONTINUED FROM PAGE 3 OF FORM 2C) OUTFALL 121

PART A- YOU MUST PROVIDE THE RESULTS OF AT LEAST ONE ANALYSIS FOR EVERY POLLUTANT IN THIS TABLE. COMPLETE ONE TABLE FOR EACH OUTFALL. SEE INSTRUCTIONS FOR ADDITIONAL DETAILS

	2. EFFLUENT							3. UNITS	
	A. MAXIMUM DAILY VALUE		B. MAXIMUM 30 DAY VALUE		C. LONG TERM AVRG. VALUE				
POLLUTANT	CONCENTRATION	MASS	CONCENTRATION	MASS	CONCENTRATION	MASS	NO. OF ANALYSES	CONCENTRATION	MASS
TOTAL SUSPENDED SOLIDS	.	.	0.8	0.2537	0.5	0.1586	2	PPM	LB/DAY
FLOW	.	.	0.038	.	0.038	.	2	MGD	.
PH	.	.	7.02 (MIN)	8.59 (MAX)	N/A	N/A	2	STD. UNITS	.

PART B.

MARK X			2. EFFLUENT					3. UNITS	
BELIEVED PRESENT	BELIEVED ABSENT		A. MAXIMUM DAILY VALUE		B. MAXIMUM 30 DAY VALUE		C. LONG TERM AVRG. VALUE		
			CONCENTRATION	MASS	CONCENTRATION	MASS	CONCENTRATION	MASS	NO. OF ANALYSES	CONCENTRATION	MASS

ITEM V-B CONTINUED
PART C.

EPA I.D. NUMBER= VA0004090 OUTFALL 121

1. POLLUTANT	MARK X BELIEVED PRESENT	MARK X BELIEVED ABSENT	2. EFFLUENT A. MAXIMUM DAILY VALUE CONCENTRATION	A. MAXIMUM DAILY VALUE MASS	B. MAXIMUM 30 DAY VALUE CONCENTRATION	B. MAXIMUM 30 DAY VALUE MASS	C. LONG TERM AVRG. VALUE CONCENTRATION	C. LONG TERM AVRG. VALUE MASS	NO. OF ANALYSES	3. UNITS CONCENTRATION	3. UNITS MASS
POLLUTANT											
OIL & GREASE	____	____	.	.	<6.6	<2.0929	<5.8	<1.8392	2	PPM	LB/DAY

THIS PAGE IS AN OVERSIZED DRAWING OR FIGURE,

THAT CAN BE VIEWED AT THE RECORD TITLED: HOG ISLAND QUADRANGLE VIRGINIA 7.5 MINUTE SERIES (TOPOGRAPHIC) WITHIN THIS PACKAGE...OR, BY SEARCHING USING THE DOCUMENT/REPORT NUMBER: NONE

NOTE: Because of this page's large file size, it may be more convenient to copy the file to a local drive and use the Imaging (Wang) viewer, which can be accessed from the Programs/Accessories menu.

THIS PAGE IS AN OVERSIZED DRAWING OR FIGURE,

THAT CAN BE VIEWED AT THE RECORD TITLED:

DWG. NO. S-2646-3-C-001 SITE DRAINAGE MAP ENVIRONMENTAL COMPLIANCE SURRY POWER STATION

WITHIN THIS PACKAGE...OR, BY SEARCHING USING THE DOCUMENT/REPORT DWG. NO. S-2646-3-C-001

NOTE: Because of this page's large file size, it may be more convenient to copy the file to a local drive and use the Imaging (Wang) viewer, which can be accessed from the Programs/Accessories menu.

THIS PAGE IS AN OVERSIZED DRAWING OR FIGURE,

THAT CAN BE VIEWED AT THE RECORD TITLED:

DWG. NO. S-2646-3-C-002 STATION DRAINAGE MAP ENVIRONMENTAL COMPLIANCE SURRY POWER STATION

WITHIN THIS PACKAGE...OR, BY SEARCHING USING THE DOCUMENT/REPORT DWG. NO. S-2646-3-C-002

NOTE: Because of this page's large file size, it may be more convenient to copy the file to a local drive and use the Imaging (Wang) viewer, which can be accessed from the Programs/Accessories menu.