UNITED STATES
NUCLEAR REGULATORY COMMISSION
WASHINGTON, D.C. 20555-0001

April 5, 2001

MEMORANDUM TO: Michael R. Johnson, Chief
Performance Assessment Section
Inspection Program Branch
Division of inspection Program Management
Office of Nuclear Reactor Regulation

FROM: August K. Spector, Communication Task Lead
Inspection Program Branch
Division of Inspection Program Management
Office of Nuclear Reactor Regulation

SUBJECT: REACTOR OVERSIGHT PROCESS SUMMARY OF PUBLIC MEETING HELD ON April 4, 2001

On April 4, 2001a public meeting was held at the NRC Headquarters, Two White Flint North, Rockville, MD to discuss and review the initial implementation of the revised reactor oversight process. An agenda, attendance list, and information exchanged at the meeting are attached.

Attachments:

1. List of Participants
2. Agenda
3. Physical Protection Cornerstone Significance Determination Process Flow Chart (Draft)
4. Unit Shutdowns and Power Reductions per 7,000 critical hours (Draft)
5. General guidance applicable to all graphs for industry level trending
6. Proposed substitute language for NEI 99-02
7. Frequently Asked Questions, Log. 15, 16, 17, 18, 19, 20
8. Regulatory Assessment Performance Indicator Guideline (NEI 99-02 Revision 1) (Draft)

April 5, 2001

MEMORANDUM TO: Michael R. Johnson, Chief
Performance Assessment Section
Inspection Program Branch
Division of inspection Program Management
Office of Nuclear Reactor Regulation

FROM: August K. Spector, Communication Task Lead
Inspection Program Branch
Division of Inspection Program Management
Office of Nuclear Reactor Regulation

SUBJECT: REACTOR OVERSIGHT PROCESS SUMMARY OF PUBLIC MEETING HELD ON April 4, 2001

On April 4, 2001a public meeting was held at the NRC Headquarters, Two White Flint North, Rockville, MD to discuss and review the initial implementation of the revised reactor oversight process. An agenda, attendance list, and information exchanged at the meeting are attached.

Attachments:

1. List of Participants
2. Agenda
3. Physical Protection Cornerstone Significance Determination Process Flow Chart (Draft)
4. Unit Shutdowns and Power Reductions per 7,000 critical hours (Draft)
5. General guidance applicable to all graphs for industry level trending
6. Proposed substitute language for NEI 99-02
7. Frequently Asked Questions, Log. 15, 16, 17, 18, 19, 20
8. Regulatory Assessment Performance Indicator Guideline (NEI 99-02 Revision 1) (Draft)

DISTRIBUTION:
NRC File Center IIPB r/f PUBLIC

Accession # Template
To receive a copy of this document, indicate in the box: "C" = Copy without enclosures "E" = Copy with enclosures "N" = No copy

OFC:	DIPM/IIPB		DIPM/IIPB			
NAME:	ASpector		A. Madison			
DATE:	4/5 /01		4/5/01			

OFFICIAL RECORD COPY

NRC Public Meeting
Reactor Oversight Process
List of Participants
April 4, 2001

S. Ferrel, TVA
D. Hickman, NRC.
A. Madison, NRC
M. Johnson, NRC
T. Boyce, NRC
D. Raleigh, Scientech
D. Olsen, Dominion
M. Taylor, Exelon
S. Floyd, NEI
Wade Warren, SNC
T. Houghton, NEI
S. Morris, NRC
R. Ritzman, PSEG
W. Dean, NRC
J. Weil, McGraw Hill
J. Sumpter, NPPD
J. Enkeball, NEI
J. Thompson, NRC
J. Jacobson, NRC
J. Tappert, NRC
P. Loftus, COMED
D. R. Robinson, Nebraska Public Power
William Dean, NRC

Attachment 1

Agenda
April 4, 2001
Public Meeting

1. Discussion of Physical Protection Significance Determination Process.
2. Discussion of Initiating Event Performance Indicator pilot activity.
3. Discussion of Pilot Testing Replacement for Unplanned Power Changes performance indicator
4. Discussion of removal of t/2 for surveillance failure in Unavailability Performance Indicator
5. Discussion of reporting Reactor Core Insolation Cooling (RICI) system in the Safety System Functional Failure performance indicator.
6. Discussion and update on industry trends
7. Discussion of coordination of reporting requirements
8. Discussion of Problem Identification and Review Inspection activities
9. Discussion of Lessons Learned Workshop issues
10. Update on revision 1 to NEI 99-02
11. Review and approval of Frequently Ask Questions.

Attachment 2

Attachment 3

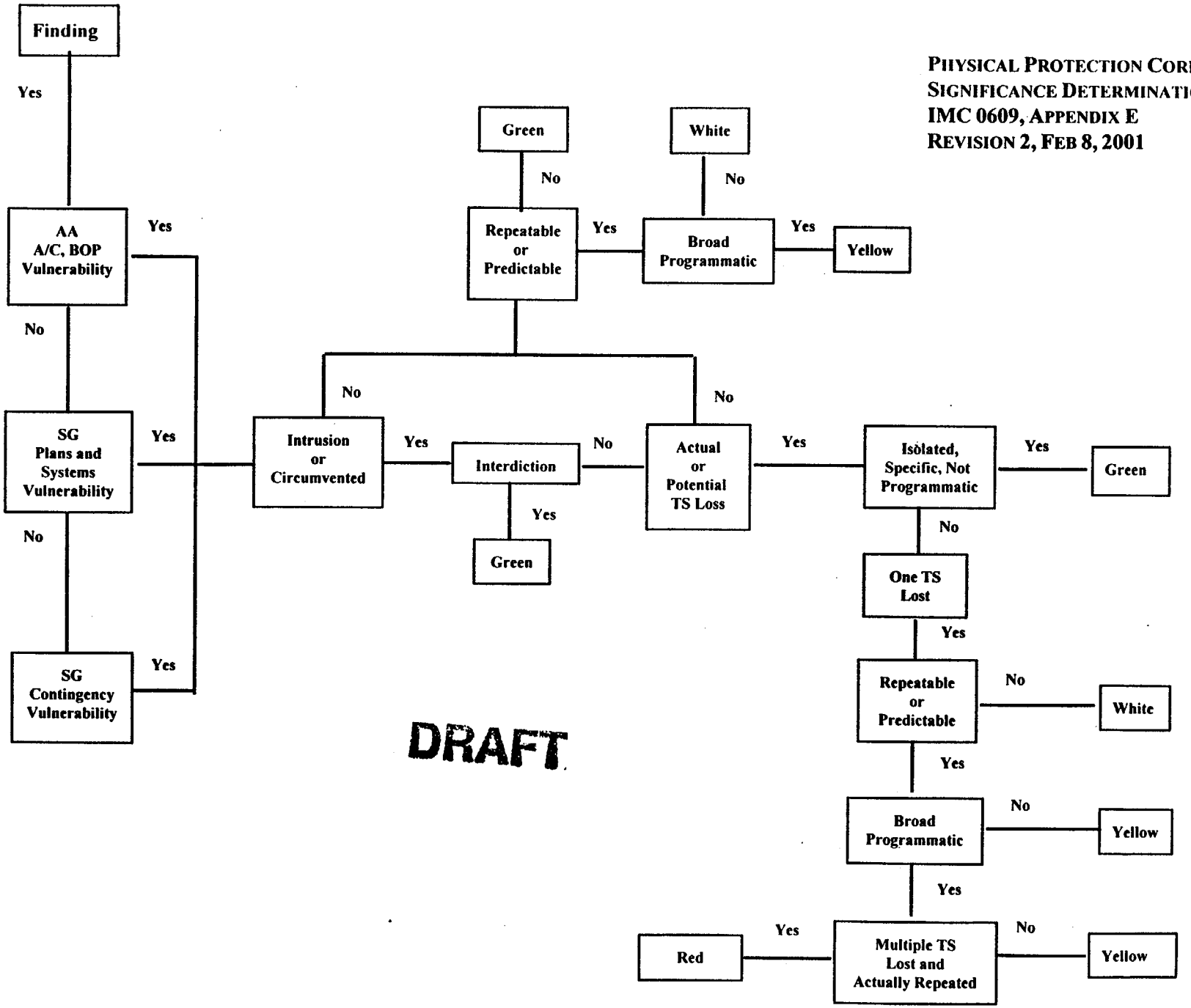

DRAFT

DRAFT

UNIT POWER REDUCTIONS PER 7,000 CRITICAL HOURS

Purpose

This indicator monitors the number of unit power reductions of greater than 20 percent of full power due to administrative control problems; personnel errors; maintenance problems; design, construction, installation, or fabrication problems; or equipment failures. It may provide leading indication of risk-significant events but is itself not risk-significant. The indicator is calculated per 7,000 critical hours to monitor the number of plant power changes for a typical year of operation.

Indicator Definition

The number of unit power reductions of greater than 20 percent of full power due to administrative control problems; personnel errors; maintenance problems; design, construction, installation, or fabrication problems; or equipment failures during the previous four quarters per 7,000 critical hours.

Data Reporting Elements

The following data are reported for each reactor unit:

- the number of unit power reductions of greater than 20 percent of full power due to administrative control problems; personnel errors; maintenance problems; design, construction, installation, or fabrication problems; or equipment failures in the previous quarter
- the number of critical hours in the previous quarter

Calculation

The indicator is determined using the values for the previous four quarters as follows:

$$\text{value} = \frac{\text{(number of unit power reductions in the previous 4 qtrs)}}{\text{(number of critical hours in the previous 4 qtrs)}} \times 7{,}000 \text{ hrs}$$

Clarifying Notes

7,000 hours is used because it represents one year of reactor operation at about an 80% availability factor.

2,400 critical hours is the minimum number of critical hours in four consecutive quarters for which an indicator value is calculated. Rate indicators can produce misleadingly high values when the denominator is small; for critical hours under 2,400, a single shutdown can produce a value that crosses the green-white threshold. Therefore, the displayed value will be N/A. All data elements must nevertheless be reported.

Administrative control problems comprise management, supervisory, and procedural deficiencies. Examples include poor planning, lack of or breakdown in supervisory control, inadequate coordination, poor communications, inadequate procedures, and ineffective corrective actions.

Attachment 4

Personnel errors are errors of omission or commission by licensed reactor operators, non-licensed plant staff, and contract personnel.

Maintenance problems are deficiencies in the full range of activities necessary to maintain plant equipment operating as originally installed, including maintenance, testing, surveillance, calibration, chemistry, and radiation protection. Such deficiencies generally lead to inadequate upkeep or repair of plant equipment or systems or inadequate programs to monitor equipment and plant performance as necessary to prevent failures. This category also include failures of mechanical equipment for which a cause cannot be specifically identified.

Design, construction, installation, or fabrication problems are deficiencies in the listed activities that are not typically classified as an individual personnel error.

Equipment failures are random failures of electronic piece parts or failures due to environmental conditions such as lightning, high winds, etc.

Unit power reductions that are not counted are (1) those that are scheduled prior to startup of a new fuel cycle following a refueling outage (i.e., mid-cycle maintenance outages and the next refueling outage); (2) those that are directed by the load dispatcher under normal operating conditions due to load demand and economic reasons or for grid stability or nuclear plant safety concerns arising from external events outside the control of the nuclear unit; (3) anticipatory unit shutdowns or power reductions due to external events, such as hurricanes, tornadoes, or range fires, that threaten the safety of the nuclear unit or its transmission lines; (4) certain proceduralized unit shutdowns or power reductions in response to known environmental problems, such as accumulation of marine debris or biological contaminants in certain seasons (each situation is different and should be identified to the NRC for a determination as to whether it should be counted); (5) those that are included in the unplanned scram indicator; (6) unit shutdowns or power reductions that are a necessary part of normal plant operations, such as those conducted to perform surveillance testing or rod pattern changes in BWRs, unless they also include activities to address design, construction, fabrication, or installation, errors; equipment problems; or personnel, procedural, or supervisory errors; and (7) end-of-cycle coastdown.

Unit shutdowns and power reductions that are counted are all those not excluded by the above paragraph.

The intent of this indicator is to count all power reductions that are due to licensee performance issues and to exclude those that are a part of normal plant power production.

General guidance applicable to all graphs for industry level trending

1. Graphs should be organized by cornerstone. Each cornerstone should be on a separate web page. There will be multiple graphs for each cornerstone.
2. Within each cornerstone, there will be long term graphs (>4 years) with annual data by FY, and there will be short term graphs (<4 years). These should be separated into long term and short term on the web site.
3. For most of the ROP PIs, long term graphs will be developed later since there is no data to support long term trends. For scrams and SSFFs, INEEL will be contracted to develop long term graphs derived from other data beyond that submitted as part of the ROP. These data and graphs are planned to be supplied in MS Excel, but can be supplied in a variety of formats as needed.

General guidance for short term graphs for ROP PIs

4. There will be short term graphs showing 4 years of data by quarter (16 quarters). Start at Q1 1998 for display purposes for all PIs, but display only those quarters where there is data for over 80 plants.
5. Graphs should be bar charts, with best values at the bottom and worst value at the top
6. Values should be placed on top of the bars; no tables with data are required
7. No best fit trendlines are required for the short term graphs. In the future, we may consider putting the max, median, and min values on a sliding scale for each bar on the chart, or in a table below each chart.
8. Add a link below each graph for specific explanations/comments similar to the current format for the plant-specific PIs. There should be a separate link from the graph to a separate document that gives more detailed explanation for each graph (Tom Boyce will supply this).
9. No titles are required on the x axis or y axis since the overall title of the graph is self-explanatory.
10. Max scale for the y-axis should be set at the green-white threshold for the plant-specific PIs. If this is not possible, use judgement and pick easy numbers like 5,10, .5,.10, etc.
11. If a plant has no data, that plant should not be counted in the denominator.

Calculation guidance for each PI (23 charts total-includes 1 on hold):

<u>Initiating Events Cornerstone</u> (3 charts)
Scrams: Raw counts of scrams by QTR/total industry critical hours x7000 hours
Scrams with LOHR: Raw counts of scrams with LOHR by QTR/# plants
Unplanned Power Changes: Raw counts of unplanned power changes by QTR/total industry critical hours x7000 hours

<u>Mitigating Systems Cornerstone</u> (10 charts)
SSFF: Raw counts by QTR/#plants with complete data
SSU (applies to all 4 systems):
Numerator: Raw count by QTR of unavailable hours (all 3 data elements)/#required hours by QTR
Denominator: #plants with complete data

<u>Barrier Integrity</u> (2 charts)
Sum of all plant % of T.S. activity each QTR (max of 3 months in each QTR)/#plants with data
Sum of all plant % of T.S. leakage each QTR (max of 3 months in each QTR)/#plants with data

Attachment 5

Emergency Protection (3 charts)
ERO Drill Performance: sum of all plant #classifications/sum of all plant #classification opportunities x100 by QTR: (add all plant-specific numerators and divide by total for all denominators, then multiply x100)(don't divide by #plants)
ERO Drill Participation: sum of all plant #key ERO members participating/sum of all plant #key ERO members x100 by QTR: (add all plant-specific numerators and divide by total for all denominators, then multiply x100)(don't divide by #plants)
ANS: sum of all plant # successful tests/sum of all plant #tests x100 by QTR: (add all plant-specific numerators and divide by total for all denominators, then multiply x100)(don't divide by #plants)

Occupational Radiation Safety (1 chart)
OR: raw count by QTR of 3 data elements/#plants

Public Radiation Exposure (1 chart)
PRS: raw count by QTR/#plants

Physical Protection (3 charts)
PASEPI: 3 step calculation:(Note: This chart is on hold because the PI definition is changing. Below is supplied to document the current thinking)

(1) Raw counts of CCTV compensatory hours by quarter/raw count of total #cameras (Ask Don for # cameras)
(2) Raw count of IDS compensatory hours by QTR/raw count of total #IDS zones (Ask Don for #IDS zones)
(3) Industry PI = [(1) + (2)]/2

Personnel Screening Program: raw count of #failures to report by QTR/#plants
Physical Protection FFD: raw count of #failures to report by QTR/#plants

4/3/01—Proposed substitute Language for NEI 99-02—(**Bold underlined**)

Page 139: Compensatory posting: (beginning with the second bullet)

- Postings of IDS segments for false alarms in excess of security program limits would be counted in the PI. **In the absence of a false alarm limit in the security program, qualified individuals can disposition the condition.**
- Some postings are the result of non-equipment failures, which may be the result of test/maintenance conditions. For example, in a situation where a part of the IDS is taken out-of-service to check a condition for **false alarms (not in excess of security program false alarm limits) no compensatory hours would be counted.** (Deleted sentence) If the equipment is determined to have malfunctioned, it is not operable and maintenance/repair is required, the hours would count.
- (Same)
- (Same)
- (New bullet) **Pan-Tilt-Zoom (PTZ) cameras are not routinely used as a CCTV for perimeter assessment and therefore do not count for the PI unless the site would be required to expend compensatory man-hours if the PTZ became inoperable.**
- (Same)

Page 140:

- (First bullet) In a situation where security personnel are already in place at continuously manned remote location security booths around the perimeter of the site and there is a need to provide compensatory coverage for the loss of IDS equipment, security persons already in these booths can fulfill this function. **If they are used to perform the compensatory function, the hours are included in the PI. All persons required to provide compensation are counted. If more persons are assigned than required, only the required compensatory man-hours would be counted.**
- (Same)
- Same with typo corrected in last line:...would result **in**

Page 152: Clarifying notes: (second paragraph)
Only reports of significant programmatic failures of the implemented regulatory requirements are included in the PIs for access authorization or fitness-for-duty.

Attachment 6

FAQ Log 15				
Temp No.	**PI**	**Question/Response**	**Status**	**Plant/ Co.**
15.12	MS01 MS02 MS03 MS04	**Question:** 1. Should support system unavailability be counted in the monitored safety system unavailability PI if analysis or engineering judgement has determined that the support system can be restored to available status such that the monitored system remains available to perform its intended safety function? 2. Do the criteria for determining availability described in NEI 99-02, Revision 0, page 26 lines 31-40 apply to this situation? **Licensee Proposed Response:** 1. No. During both testing and non-testing situations, the criteria described in NEI 99-02, Revision 0, page 33, lines 7-9 should apply, "In these cases, analysis or sound engineering judgment may be used to determine the effect of support system unavailability on the monitored system." If the analysis or engineering judgment determines that the unavailability of the support system does not impair the ability of the monitored system to perform its intended safety function, then the support system unavailability should not be counted in the monitored system PI. For example, if engineering analysis determines that the unavailability of a ventilation support system for the emergency diesel generator does not adversely impact the availability of the emergency diesel generator to perform its intended function, the unavailability of the support system would not be counted in the emergency diesel generator PI. The engineering analysis must evaluate such things as; the length of time between an event and the time the ventilation system is required to be available to support the safety function of the emergency diesel generator, the complexity the actions required by plant operators to restore the availability of the ventilation system, and the probability of success for the restoration actions. Restoration actions should be contained in a written procedure and must not require diagnosis or repair. The engineering analysis must provide a high degree of assurance that the unavailability of the ventilation support system does not impact the ability of the emergency diesel generator to perform its safety function. This treatment is consistent with maintenance rule and PRA. 2. No. In NEI 99-02, Revision 0, page 26, lines 31-40, criteria for exclusion of planned unavailability for testing activities of monitored systems are described. The criteria established in this section describe required actions or barriers which must be in place during *testing* so that unavailability of the monitored system is not counted in the monitored system PI.	Introduced 10/31 12/5/00 – NEI, Licensee proposed response added. 3/2/01 – Discussed. FAQ to be discussed as part of SSU focus group.	ComEd

Attachment 7

FAQ Log 16				
Temp No.	**PI**	**Question/Response**	**Status**	**Plant/ Co.**
16.1	IE01	**Question:** **Response:**	WITHDRAWN	
16.2	MS03	**Question:** The Nuclear Service Water (NSW) system provides assured suction supply to the Auxiliary Feedwater (AFW) system under certain accident scenarios. During a postulated seismic event concurrent with a loss of offsite power (LOOP), the normal non-safety related, non-seismic condensate suction sources are assumed to be unavailable. Flow testing is performed under the plant's Generic Letter 89-13 program to assure adequate flow. The alignment used in this testing renders this flowpath unavailable to fulfill its assured supply function. However, the normal condensate source remains available. Recently a reactor trip occurred during the performance of this testing. The testing was terminated, but due to resource limitations during event recovery, the normal operating alignment was not restored. Therefore, the assured AFW supply remained unavailable for an extended period. However, during the event, the AFW system started automatically on a valid autostart signal (2/4 lo-lo SG level in 1/4 SGs, loss of both main feedwater pumps) and continued to operate for a period of two days to maintain steam generator levels drawing suction from the normal condensate supply. Previously, whenever the assured supply has been unavailable, whether for testing or other alignments, the entire AFW system has been deemed unavailable based on a hypothetical design basis event scenario. However, the real world event described above results in the dichotomy of calling a system unavailable because its assured supply is unavailable while it was in fact fulfilling its design basis function. Under the NEI 99-02 guidelines, how should unavailability be addressed in conditions where the assured supply is unavailable with the normal supply available? **Response:** The purpose of the safety system unavailability indictor is to monitor the readiness of important safety systems to perform their safety functions in response to off-normal events or accidents. Since the assumed suction supply to the AFW system is credited for off-normal events or accidents, the unavailable time should be counted unless the system could have been promptly restored by a dedicated operator stationed for that purpose during the testing	Introduced 12/6 2/5/01 – Response added by NEI. **3/2/01 – Tentative Approval.**	Catawba

FAQ Log 16

Temp No.	PI	Question/Response	Status	Plant/ Co.
16.3	MS01 MS02 MS03 MS04	**Question:** Concerning removal of fault unavailable hours NEI 99-02 states: "Fault exposure hours associated with a single item may be removed after 4 quarters have elapsed from discovery…" In the case we are considering, the hours were discovered in the third calendar quarter. When do the four elapsed quarters begin? At the start of the fourth calendar quarter? and end at the conclusion of next year's third quarter? If the period of calculation of the indicator value was only four calendar quarters beginning the quarter after they occurred, and the fault unavailable hours are reported in the quarter in which they occurred, what's the point in removing them after they are no longer a factor in the calculation of the indicator? "Fault exposure hours are removed by submitting a change report that provides a revision to the reported hours for the affected quarter(s). The change report should include a comment to document this action." **Response:** The fault exposure hours should be reported for third quarter data and may be removed with the submittal of the next year's third quarter data provided the criteria for removing fault exposure hours are met. All safety system unavailability performance indicators calculate train unavailability for 12 quarters. Therefore, the situation you describe would not exist.	Introduced 12/6 2/5/01 – NEI response added. **3/2/01 – Tentative Approval.**	IP2
16.4	BI01	**Question:** NRC Performance Indicator BI-01 monitors the integrity of the fuel cladding. We are required to report the maximum monthly RCS activity in micro-Curies per gram dose equivalent Iodine-131 and express it as a percentage of the technical specification limit. FAQ 226 asks if licensees with limits more restrictive than the technical specification limit should use the more restrictive limit or the TS limit. The FAQ answer states that the licensee should use the most restrictive regulatory limit unless it is "insufficient to assure plant safety." If administrative controls are imposed "... to ensure that TS limits are met and to ensure the public health and safety, that limit should be used for this PI." Vermont Yankee has a Basis for Maintaining Operation (BMO) that is in effect that limits the Reactor Coolant System to 0.05 uCi/gm I-131 dose equivalent. This BMO, 98-36, entitled "Effect of Main steam Tunnel and Turbine Building HELBs on the HVAC Rooms," is concerned with Control Room habitability and the regulatory dose limits to the operators. It states that there is no concern with increased radiological dose to the public from the VY HELB off-site dose analyses in FSAR Section 14.6. FAQ 226 mentions the concern for both assuring plant safety and public health and safety as the intent for the more restrictive administrative controls that may be in effect. NRC Administrative Letter 98-10, which is mentioned in the answer to this FAQ, states in the Discussion that the concern is the safe operation of the facility. Our question is this: "Is Vermont Yankee required to use the lower administrative limit imposed by the BMO (0.05 uCi/gm I-131 dose equivalent) even though public health and safety is not compromised if this limit is exceeded?" **Response:** No. The intent is when administrative limits are required to ensure 10 CFR Part 100 limits are not exceeded.	Introduced 12/6 2/5/01 – NEI response added. **3/2/01 – Tentative Approval.**	VY

FAQ Log 16

Temp No.	PI	Question/Response	Status	Plant/ Co.
16.5	MS03	**Question:** **Appendix D** NEI 99-02 states (p 26) that Planned Unavailable Hours include "…testing, unless the test configuration is automatically overridden by a valid starting signal, or the function can be promptly restored either by an operator in the control room or by a dedicated operator stationed locally for that purpose." Also,(p 40) The control room operator must be "…an operator independent of other control room operator immediate actions that may also be required. Therefore, an individual must be 'dedicated.'" Ginna Station's Standby Aux Feedwater Pumps do not have an auto-start signal; they are required to be manually started by an operator (not a "dedicated" operator) within 10 minutes. Should this be counted as unavailable time? **Licensee Proposed Response:** Ginna Station should be allowed to use their Tech Spec requirements (manually started within 10 minutes) as guidance for counting Planned Unavailable Hours for the SDAFW pumps during testing, i.e. if the Standby Aux Feedwater Pumps are available by Tech Spec, the PI should not count them as not available.	Introduced 12/6 Discussed. Need to confirm compliance with NUREG 0737	Ginna
16.6	MS01 MS02 MS03 MS04	**Question:** NOTE: This is similar to FAQ Log 15, Temp No. 15.4 NEI 99-02 states (p 26) "Restoration actions must be contained in a written procedure, must be uncomplicated (a single action or a few simple actions), and must not require diagnosis or repair. Credit for a dedicated local operator can be taken only if (s)he is positioned at the proper location throughout the duration of the test for the purpose of restoration of the train should a valid demand occur." Ginna Station Results and Test personnel are qualified to perform valve lineups and are in the control room and/or stationed locally during testing. Do the R&T personnel with the written test procedure meet the guidance of NEI 99-02 for being able to restore equipment to service when needed and thus not counting the testing time as planned unavailable hours? **Licensee Proposed Response:** Yes, provided the plant personnel are qualified and designated to perform the restoration function and are not performing any restoration steps for which they are not qualified. Ginna Station considers the restoration steps of the test procedures to be the "written procedure" for the required "restoration actions". The qualified R&T personnel (rather than a dedicated operator) with the test procedures allow Ginna Station to take credit for restoration actions that are virtually certain to be successful during accident conditions while performing tests and thus this time should not count towards Planned Unavailable Hours.	Introduced 12/6 Discussed. Need more information on qualification of R&T tech and actions required **3/2/01 – Response revision. Tentative Approval as revised.**	Ginna
16.11	MS02 MS04	**Question:** At our ocean plant we periodically recirculate the water in our intake structure causing the temperature to rise in order to control marine growth. This process is carried out over a six hour period in which the temperature is raised slowly in order to chase fish toward the fish elevator so they can be removed from the intake and thus minimize the consequential fish kill. Temperature is then reduced and tunnels reversed to start the actual heat treat. Actual time with warm water in the intake is less than half of the evolution. A dedicated operator is stationed for the evolution, and by procedure at any point, can back out and restore normal intake temperatures by pushing a single button to reposition a single circulating water gate. The gate is large and may take several minutes to reposition and clear the intake of the warm water, but a single button with a dedicated operator, in close communication with the control room initiates the gate closure. During this evolution, one train of service water, a support system for HPSI and RHR, is aligned to the opposite unit intake and remains fully Operable in accordance with the Technical Specifications. The second train is aligned to participate in the heat treat, and while functional, has water beyond the temperature required to perform its design function. This design function of the support system is restored with normal intake temperatures by the dedicated operator realigning the gate with a single button if needed. Gate operation is tested before the start of the evolution and restoration actions are virtually certain. The ability of the safety systems HPSI and RHR to actuate and start is not impaired by these evolutions. Does the time required to perform these evolutions on a support system need to be counted as unavailability for HPSI and RHR?	Introduced 12/6 12/6 Discussed. HOLD needs more clarity in the question 2/5/01 – need to know design basis	San Onofre

FAQ Log 16

Temp No.	PI	Question/Response	Status	Plant/ Co.
		Licensee Proposed Response: No. As described in the question, the ability of safety systems HPSI and RHR to actuate and start is not impaired by these evolutions. There are no unavailable hours.		
16.13	MS04	**Question:** **Appendix D** NEI 99-02 Revision 0 requires the Residual Heat Removal (RHR) system to satisfy two separate functions: • The ability to take a suction from the containment sump, cool the fluid, and inject at low pressure into the RCS • The ability of the RHR system to remove decay heat from the reactor during a normal unit shutdown for refueling or maintenance These functions are completed by the Emergency Core Cooling System on most Westinghouse PWR designs. South Texas Project has a unique design for these functions completed by two separate systems with a shared common heat exchanger. How should unavailability be counted for South Texas Project?. **Response:** Due to the unique design South Texas project, unavailability will be determined as follows: • In plant Modes 1, 2, 3, and 4 South Texas Project will count the unavailability of the Low Head Safety Injection Pump and the flowpath through it's associated RHR Heat Exchanger as the hours to count for the RHR performance indicator. This equipment and flowpath satisfies the requirement to "take a suction from the containment sump, cool the fluid, and inject at low pressure into the RCS". The RHR pump does not contribute to the performance of this safety function since it can not take suction on the containment sump. • In plant Modes 4, 5, and 6 South Texas Project will count the unavailability hours of the RHR Pump and the flowpath through it's associated RHR Heat Exchanger as the hours to count for the RHR performance indicator. This equipment and flowpath satisfies the requirement to "remove decay heat from the reactor during a normal unit shutdown for refueling or maintenance". The RHR loop is required to be isolated from the Reactor Coolant System in Modes 1, 2, and 3 due to the system design. This requirement prevents the system from performing its intended cooling function until plant pressure and temperature are lowered to a value consistent with the system design. Overlap times when both functions/systems are required will be adjusted to eliminate double counting the same time periods. This position is consistent with the direction published in Frequently Asked Question #149.	Introduced 12/6 12/6 Discussed. HOLD needs detailed discussion w/ STP 1/8/01 NEI response revision. 3/1/01 – Sentence added to response. STP request for review completion. **3/2/01 – Tentative Approval as revised.**	South Texas

FAQ Log 16

Temp No.	PI	Question/Response	Status	Plant/ Co.
16.14	MS03	**Question:** **Appendix D Question** Davis-Besse has an independent motor-driven feedwater pump (MDFP) that is separate from the two trains of turbine-driven auxiliary feedwater pumps. The piping for the MDFP (when in the auxiliary feedwater mode) is separate from the auxiliary feedwater system up to the steam generator containment isolation valves. The MDFP is not part of the original plant design, as it was added in 1985 following our loss-of-feedwater event to provide "a diverse means of supplying auxiliary feedwater to the steam generators, thus improving the reliability and availability of the auxiliary feedwater system" (quote from the DB Updated Safety Analysis Report). The resolution to FAQ 182 was that Palo Verde should count the unavailability hours for their startup feedwater pump. However, since the DB MDFP (like the Palo Verde startup feedwater pump) is manually initiated, DB has not been reporting unavailability hours for the MDFP due to the exception stated on page 69 of NEI 99-02 Revision 0. The DB MDFP is non-safety related, non-seismic, and is not Class 1E powered or automatically connected to the emergency diesel generators. Based upon discussions with Palo Verde, their startup feedwater pump is Class 1E powered and automatically connected to an EDG. The DB MDFP is required by the Technical Specifications to be operable in modes 1 - 3. However, the Tech Specs do not require the MDFP to be aligned in the auxiliary feedwater mode when below 40 percent power. (The MDFP is used in the main feedwater mode as a startup feedwater pump when less than 40% power). The DB auxiliary feedwater system is designed to automatically feed only an intact steam generator in the event of a steam or feedwater line break. Manual action must be taken to isolate the MDFP from a faulted steam generator. The MDFP is included in the plant PRA, and is classified as high risk-significant for Davis-Besse Per the DB Tech Specs, the MDFP and both trains of turbine-driven auxiliary feedwater pumps are required in Modes 1-3. The MDFP does not fit the NEI definition of either an "installed spare" or a "redundant extra train" per NEI 99-02, Rev. 0, pages 30 - 31. Should the Davis-Besse MDFP be reported as a third train of Auxiliary Feedwater, even though it is manually initiated? (Note: this FAQ is similar to FAQs 205 and 206 submitted by Crystal River regarding the auxiliary feedwater system) **Response:**	Introduced 12/6	Davis-Besse

FAQ Log 17				
Temp No.	**PI**	**Question/Response**	**Status**	**Plant/ Co.**
17.2	PP01	**Question:** For sites that do not use CCTV for primary assessment of the perimeter IDS, how is the Indicator Value for the Protected Area Security Equipment Performance Index calculated? **NRC Response:** For sites that do not use CCTV for primary assessment, as stated in their approved security plan, use only the IDS Unavailability index for the Indicator Value. The Indicator value will be the IDS Unavailability Index divided by one for sites where these conditions exist. The exclusion of the CCTV index from the performance indicator calculation should be indicated by reporting a CCTV normalization factor of zero and zero CCTV compensatory hours for each affected unit. ~~**Alternate Response**~~ ~~Option 1 No change.~~ ~~Option 2 For sites that do not use CCTV for primary assessment, as stated in their approved security plan, use only a weighted IDS Unavailability index for the Indicator Value. The Indicator value will be the IDS Unavailability Index divided by 3/2 for sites where the conditions exist.~~ ~~Option 3 For those sites, the PI will be treated as a unique design. The sites should continue to report compensatory hours and normalization factor, but no indicator value will be calculated.~~	Introduced 1/10 1/10/2001 – Tentative Approval – NRC action to confirm acceptability with C. See 2/7/01 – NEI proposed alternate responses. 3/2/01 – Discussed.	NRC

Temp No.	PI	Question/Response	Status	Plant/ Co.
18.1	MS01 MS02 MS03 MS04	**Question:** Should surveillance testing of the safety system auto actuation system (e.g. Solid State Protection System testing, Engineered Safety Feature testing, Logic System Functional Testing) be considered as unavailable time for all the affected safety systems? During certain surveillance testing an entire train of safety systems may have the automatic feature inhibited. For auto actuation system testing that affects only a single safety system (e.g. RHR), unavailability reporting must be determined utilizing theguidance for prompt dedicated operator action(s). However, for autoactuation system testing that impacts more than one safety system (e.g. may inhibit an entire train of safety systems), unavailable time is not required to be considered during those specific portions of the test provided the trains' functions can be restored by the emergency operating procedures.This exception to reporting unavailability is allowed because of the potential unintended consequences on multiple safety systems that could result by utilizing prompt operator actions to restore the auto actuation system.	Introduced 2/8 3/2/01 – Discussed. To be discussed by SSU focus group and NEI task force.	Southern
18.2	MS01 MS02 MS03 MS04	**Question:** When reporting safety system unavailable time there are periodic (such as weekly) evolutions that although they may not be simple actions to restore a safety system, they result in the safety system being unavailable for no more than several minutes. Is this level of tracking unavailable time required?	Introduced 2/8 3/2/01 – Discussed. To be discussed by SSU focus group and NEI task force.	Southern
18.3	MS04	**Question:** **Licensee Proposed Response:**	WITHDRAWN	Calvert Cliffs
18.4	MS04	**Question:** **Response:**	WITHDRAWN	Calvert Cliffs
18.5	IE02	**Question:** Should the reactor trip described in the scenario below be included as a "Scram with Loss of Normal Heat Removal?" A very heavy rainfall caused the turbine building gutters to overflow and water entered the interior of the turbine building. Water subsequently leaked onto the main feedwater pump B area and affected the pump speed control circuitry. Feedwater pump B speed increased and feedwater pump A speed decreased to compensate. Shortly thereafter feedwater pump B speed decreased and feedwater pump A increased. The control room operators placed the feedwater pump turbine master speed controller in manual in an attempt to recover from the transient. This action stabilized pump speed. The transient caused the digital feedwater control system to place the feedwater regulating valves in manual control. Levels in steam generators B, C, and D began to rise. A hi-hi steam generator level (P-14) occurred in steam generator B. The P-14 signal tripped both main feedwater pumps, generated a feedwater isolation signal, and tripped the main turbine. The reactor tripped upon turbine trip. Main feedwater pumps tripped on the P-14 signal as part of the plant design. Feedwater pump B had malfunctioned; however, feedwater pump A remained available. Auxiliary feedwater system automatic starts occurred for motor driven pumps A and B as well as the turbine driven auxiliary feedwater pump (all of these responses were as designed). **Response:** No, because the MFW system was readily restorable to perform its post trip cooldown function	Introduced 2/8 **3/2/01 – Tentative Approval**	Catawba

Temp No.	PI	Question/Response	Status	Plant/ Co.
18.6	IE03	**Question:** An unscheduled power reduction was commenced to clean main condensed water boxes. This decision was a result of indications of condenser fouling. Concurrent with this condition was the plant entry into Abnormal Operating Procedure "High Winds, Hurricanes, and Tornadoes" due to sustained winds of > 60 MPH. This resulted in rough Lake Ontario conditions. The lake agitation created high levels of suspended crud (silt) which was drawn into the Circ. Water System (evidenced by Condenser fouling indications). In response to the safety concerns arising from the external events, and minimize the impact of these events on plant operational conditions, a power reduction was taken to clean and restore normal condenser operation. Actual power change was not predictable 72 hours in advance. The anticipatory power reduction was intended to reduce the impact of external events (high winds creating unsettled lake conditions resulting in silt intrusion) on plant operational conditions. Should this downpower be included as a unplanned power change? **Response:**	Introduced 2/8 Need more information	FitzPatrick

Temp No.	PI	Question/Response	Status	Plant/ Co.
19.1	IE03	**Question:** If a plant chooses to correct a deficiency less than 72 hours following discovery (a steam leak or other condition) and reduces plant power to limit radiation exposure (ALARA) and this reduction ~~in power (>20%)~~ is <u>not</u> required by the license bases would this reduction be counted? **Response:**	Introduced 3/1	River Bend
19.2	MS01 MS02 MS03 MS04	**Question:** Page 4 of NEI 99-02 states: "The guidance provided in Revision 0 to NEI 99-02 is to be applied on a forward fit basis...", however there is also a provision to reset fault exposure hours (page 29) that requires 4 quarters have elapsed since discovery. If reset of fault exposure is applied to historical data submitted under the "best effort" collection method (i.e. grandfathered data previously collected under INPO 98-005 guidelines), does this constitute a backfit of the NEI 99-02 guidance? Additionally, if the reset of fault exposure hours does constitute a backfit, would the station then be required to revise all of the historical data to conform with all 99-02 requirements? **Response:**	Introduced 3/1	Susquehanna

Temp No.	PI	Question/Response	Status	Plant/ Co.
19.3	MS04	**Question:** **(Potential Appendix D question – Question being reworded)** Analysis has shown that when RHR is operated in the Suppression Pool Cooling (SPC) Mode, the potential for a waterhammer in the RHR piping exists for design basis accident conditions of LOCA with simultaneous LOOP. SPC is used during normal plant operation to control suppression pool temperature within Tech Spec requirements, and for quarterly Tech Spec surveillance testing. We do not enter an LCO when SPC mode is used for routine suppression pool temperature control or surveillance testing because the frequency of operation is minimal, and total run time is limited under administrative controls. If the specified design basis accident scenario occurs while the RHR system is in SPC mode, there is a potential for collateral equipment damage that could subsequently affect the ability of the system to perform the safety function. If the time RHR is run in SPC mode must be counted as unavailability, then our station RHR system indicator will be forever white due to the number of hours of normal SPC run time (approximately 300 hours per year). This would tend to mask any other problems, which would not be visible until the indicator turned yellow at 5.0%. Should our station count unavailability for the time when RHR is operated in SPC mode for temperature control or surveillance testing? **Response:**	Introduced 3/1	Susquehanna
19.4	IE03	**Question:** The hydrogen cooler for the main generator began leaking at an increased rate above normal IP-3 historical trends but well within limits requiring a shutdown and with limited potential with that rate to cause gas binding in the hydrogen cooler heat exchanger that could result in a high delta temperature trip of the generator. For the degraded condition which has been seen in the past and repaired, an action plan was developed, work packages prepared, materials procured, a monitoring program established and an administrative limit established at which a decision would be taken to correct the condition including heat exchanger replacement. Approximately December 15, 2000, there was a step increase in the hydrogen leak rate although still below the administrative limit but approaching it. Because of the upcoming holidays, management decided adequate resources may not be available if the leak were to increase further so it was decided to shut the plant down and replace the hydrogen cooler heat exchangers. This decision and the subsequent necessary actions was less than the 72 hour criteria of the guidance in NEI-99-02 (12/15 - 12/18). IP-3's concluded based on the NEI-99-02 guidance for PI IE03, specifically at FAQ # 6 that the event and IP-3's preparation met that criterion so the shutdown was not counted Does this event count? **Response:**	Introduced 3/1	IP3

Temp No.	PI	Question/Response	Status	Plant/ Co.
19.5	MS01	**Question:** NEI 99-02, Revision 0, page 48, line 1 (Clarifying Notes) states: "When determining fault exposure hours for the failure of an EDG to load-run following a successful start, the last successful operation or test is the previous successful load-run (not just a successful start). To be considered a successful load-run operation or test, an EDG load-run attempt must have followed a successful start and satisfied one of the following criteria: ☐ a load run of any duration that resulted from a real (e.g., not a test) manual or automatic start signal ☐ a load-run test that successfully satisfied the plant's load and duration test specifications ☐ other operation (e.g., special tests) in which the emergency diesel generator was run for at least one hour with at least 50% of design load When an EDG fails to satisfy the 12/18/24- month 24-hour duration surveillance test, the faulted hours are computed based on the last known satisfactory load test of the diesel generator as defined in the three bullets above." This may be in conflict, however, with the following sentence, which states: "For example, if the EDG is shutdown during a surveillance test because of a failure that would prevent the EDG from satisfying the surveillance criteria, the fault exposure unavailable hours would be computed based upon the time of the last surveillance test that would have exposed the discovered fault." If a 24-hour duration surveillance test revealed a failure due to a cause that pre-existed during the entire 12/18/24 month operating cycle, then it is not clear whether fault exposure should be calculated based on the guidance in the three listed criteria, or the three listed criteria are totally disregarded if the failure was not revealed until the 24-hour duration surveillance test. This is particularly unclear for a condition that could have been revealed during any test (e.g., any monthly 1-hour load-run surveillance), but actually happened during the 24-hour duration surveillance test. **Licensee Proposed Response:** The three listed criteria are correct and appropriate for determining fault exposure unavailable hours. The 24-hour duration surveillance test is a performance test. There is no regulatory basis (unless discussed in an individual plant's FSAR) that an EDG be capable of functioning for 24 continuous hours. Nor is there any risk informed basis that an EDG must be capable of functioning for 24 continuous hours, as a loss of an offsite electric power system would probably be restored within the one-hour period (82% probability for Palo Verde during power operation) discussed in the three listed criteria and EDGs are typically redundant equipment.	Introduced 3/1 3/2/01 – Discussed. NEI action to revise to clarify question and proposed response.	APSC
19.6	MS01 MS02 MS03 MS04	**Question:** **(Potential Appendix D Question)** **Response:**	Introduced 3/1 QUESTION BEING REVISED	Prairie Island

Temp No.	PI	Question/Response	Status	Plant/ Co.
20.1	MS04	**Question:** QUESTION WITHDRAWN **Licensee Proposed Response:**		
20.2	BI02	**Question:** The definition for the Reactor Coolant System (RCS) Leakage performance indicator is "The maximum RCS Identified Leakage in gallons per minute each month per the technical specification limit and expressed as a percentage of the technical specification limit." Cook Nuclear Plant Unit 1 and 2 report Identified Leakage since the Technical Specifications have a limit for Identified Leakage with no limit for Total Leakage. Plant procedures for RCS leakage calculation requires RCS leakage into collection tanks to be counted as Unidentified Leakage due to non-RCS sources directed to the collection tanks. All calculated leakage is considered Unidentified until the leakage reaches an administrative limit at which point an evaluation is performed to identify the leakage and calculate the leak rate. Consequently, Identified Leakage is unchanged until the administrative limit is reached. This does not allow for trending allowed RCS Leakage. The procedural requirements will remain in place until plant modifications can be made to remove the non-RCS sources from the drain collection tanks. What alternative method should be used to trend allowed RCS leakage for the Barrier Integrity Cornerstone? **Licensee Proposed Response:** Report the maximum RCS Total Leakage calculated in gallons per minute each month per the plant procedures instead of the calculated Identified Leakage. This value will be compared to and expressed as a percentage of the combined Technical Specification Limits for Identified and Unidentified Leakage. This reporting is considered acceptable to provide consistency in reporting for plants with the described plant configuration.		Cook
20.3	MS04	**Question:** FAQ for Mitigating System MS04 concerning CE Designed NSSS systems. "Alternative historical data correction method to convert 2 trains to 4 trains." Calvert Cliffs, Fort Calhoun, Millstone 2, Pallisades, Palo Verde, San Onofre, St. Lucie, and Waterford 3 In FAQ # 172, approved on May 2, 2000 for use by CE plants, two methods for changing historical data from an initial 2 train report to a revised 4 train report were outlined. Specifically, the change report methodology was to perform one of the following changes to historical data: **1. Maintain Train 1 and Train 2 historical data as is. For Train 3 and 4, repeat Train 1 and Train 2 data.** **2. Recalculate and revise all historical data using this guidance.** For CE plants incorporating method 1, a non-performance related degradation in the PI calculation for Trains 3 and 4 (and the overall PI) was subsequently observed. This degradation occurred due to a decrease in the required hours in the denominator as the historical data was replaced by typically zero (0) or low required hours reported in the revised data (post Jan. 2000) in combination with artificially high unavailability hours in the numerator (due to the doubling of non-shutdown cooling related unavailability hours from the historical data). As a result, PI values would generally degrade over time regardless of performance until the historical data drops from the PI calculation. In some cases, plants projected a fall below the GREEN/WHITE threshold in 2002, even if perfect performance was used in the projection.		CE Plants

Temp No.	PI	Question/Response	Status	Plant/ Co.
		Licensee Proposed Response: To address the calculation anomaly in the determination of the RHR PI, a third alternative is suggested for the estimation of Train 3 and Train 4 data: **3) Maintain Train 1 and Train 2 historical data as is. For Train 3 and Train 4, estimate the number of unavailable hours and required hours for the historical data period.** If changes to historical data are made, then provide comments with the change report to identify the manner in which the historical data has been revised. **(If accepted, the text of FAQ 172 would be revised and reissued as a new FAQ, replacing FAQ 172)**		
20.4	PP01	**Question:** Scheduled Equipment Upgrade During a recent NRC Security Inspection (IP 71130.03), NRC Contractors were able to defeat the Intrusion Detection System (IDS) in several areas, by using assisted jumps. An engineering evaluation was issued and formal Modification/ upgrade action was initiated that directed the installation of additional razor wire to prohibit attempts to circumvent the IDS system without being detected. Is a physical modification to a protected area boundary, that is designed to prohibit the defeat of a Intrusion Detection System (IDS) component considered to be a system/ component modification or upgrade as stated in the Clarifying Notes to NEI 99-02 under Scheduled Equipment Upgrade (and as augmented by FAQ 259)? **Response:** Yes. A physical modification to a protected area boundary is considered to be a system/ component modification or upgrade that deters or prohibits the defeat of the IDS system components.	Introduced 4/3	[redacted]
20.5		**Question** **APPENDIX D** Calvert Cliffs monitors the Safety System Unavailability Performance Indicator for PWR RHR using the guidance in NEI 99-02 provided for Combustion Engineering (CE) designed plants. When a unit is in Mode 6 and with water level in the Refueling Pool, at 23 feet or more above the top of the irradiated fuel assemblies seated in the reactor vessel, the Technical Specifications only require one Shutdown Cooling (SDC) loop to be operable and in operation. Unlike most of the other CE designed plants, at Calvert Cliffs, the two SDC loops on each unit have a common suction piping line. As a result, to permit required local leak rate testing and other maintenance activities on this common suction line, both trains of SDC would be taken out-of-service. Recognizing this plant specific design feature, the Technical Specifications specifically allow this required testing and maintenance to be performed without entering the action statements while the plant is in this particular condition. While the SDC trains are unavailable, decay heat is removed by natural convection to the volume of water in the Refueling Pool. Calvert Cliffs Technical Specifications Bases indicates that "a minimum refueling water level of 23 feet above the irradiated fuel assemblies seated in the reactor vessel provides an adequate available heat sink." In this situation, should unavailable hours be counted against the SDC loop given the plant design at Calvert Cliffs?	Introduced 4/3	Calvert Cliffs

Temp No.	PI	Question/Response	Status	Plant/ Co.
		Response: It is appropriate to not count unavailable hours for the above-described situation at Calvert Cliffs. Removing the SDC suction headers from service for the circumstances specifically allowed by the applicable Technical Specification is a reflection of plant design rather than an indication of adequate component or train maintenance practices. Unavailable hours would be counted while operating in accordance with this applicable Technical Specification if a situation occurred that required entering the action statement.		

NEI 99-02 Revision 1 (DRAFT)

Regulatory Assessment Performance Indicator Guideline

NUCLEAR ENERGY INSTITUTE

April 2001

Attachment 8

SUITE 400 1776 I STREET, NW WASHINGTON, DC 20006-3708 202.739.8000 www.nei.org

NEI 99-02 Revision 1

Nuclear Energy Institute

Regulatory Assessment Performance Indicator Guideline

April 2001

Nuclear Energy Institute, 1776 I Street N.W., Suite 400, Washington D.C. (202.739.8000)

ACKNOWLEDGMENTS

This guidance document, Regulatory Assessment Performance Indicator Guideline, NEI 99-02, was developed by the NEI Safety Performance Assessment Task Force in conjunction with the NRC staff. We appreciate the direct participation of the many utilities, INPO and the NRC who contributed to the development of the guidance.

NOTICE

EXECUTIVE SUMMARY

The Nuclear Regulatory Commission has~~is~~ revised~~ing~~ its regulatory oversight processes of inspection, assessment and enforcement for commercial nuclear power plants. The new processes rely primarily on two inputs: Performance Indicators and NRC Inspection Findings. The purpose of this manual is to provide the guidance necessary for power reactor licensees to collect and report the data elements that will be used to compute the Performance Indicators.

An overview of the complete oversight process is provided in NUREG 1649, "~~New NRC~~ Reactor ~~Inspection and~~ Oversight Process~~gram~~." More detail is provided in SECY 99-007, "Recommendations for Reactor Oversight Process Improvements," as amended in SECY 99-007A and SECY 00-049 "Results of the Revised Reactor Oversight Process Pilot Program."

This revision is effective for data collection as of July 1, 2001.

[This page intentionally left blank.]

Summary of Changes to NEI 99-02
Revision 0 to Revision 1

Page	Change
Throughout	Incorporated NRC approved FAQs into the text, primarily in the Clarifying Notes sections
Throughout	Deleted FAQ sections
3	Clarified guidance for correcting previously submitted performance indicator data
5	Removed section on applicability of NEI 99-02 Revision 0
6	Revised discussion of Frequently Asked Questions
14	Clarifies meaning of "normal heat removal path"
28-29	Provided more detailed discussion of restoration of equipment during testing
29-31	Provided more detailed discussion of treatment of Planned Overhaul Maintenance
33	Added provision to take credit for operator action to recover from an equipment malfunction or operating error
36-37	Revised discussion of treatment of RHR system while in shutdown
53	Clarifies that system function depends on plant's accident analysis
81-82	Revised definition of SSFF to be consistent with rule change to 10CFR50.72 and 50.73 and NUREG 1022 Rev 2
123	Clarified answer to FAQ 131 to include instances not covered in that FAQ
E-1	Added appendix identifying where FAQs were incorporated in text

TABLE OF CONTENTS

APPENDICES

1 INTRODUCTION

This guideline describes the data and calculations for each performance indicator in the Nuclear Regulatory Commission's (NRC) power reactor licensee assessment process. The guideline also describes the licensee quarterly indicator reports that are to be submitted to the NRC for use in its licensee assessment process.

This guideline provides the definitions and guidance for the purposes of reporting performance indicator data. No other documents should be used for definitions or guidance unless specifically referenced in this document. This guideline should not be used for purposes other than collection and reporting of performance indicator data in the NRC licensee assessment process.

Background

In 1998 and 1999, the NRC conducted a series of public meetings to develop a more objective process for assessing a licensee's regulatory and safety performance. The new process uses risk-informed insights to focus on those matters that are of safety significance. The objective is to monitor performance in three broad areas – reactor safety (avoiding accidents and reducing the consequences of accidents if they occur); radiation safety for plant workers and the public during routine operations; and protection of the plant against sabotage or other security threats.

The three broad areas are divided into cornerstones: initiating events, mitigating systems, barrier integrity, emergency preparedness, public radiation safety, occupational radiation safety and physical protection. Performance indicators are used to assess licensee performance in each cornerstone. The NRC will use a risk-informed baseline inspection process to supplement and complement the performance indicator(s). This guideline focuses on the performance indicator segment of the assessment process.

The thresholds for each performance indicator provide objective indication of the need to modify NRC inspection resources or to take other regulatory actions based on licensee performance. Table 1 provides a summary of the performance indicators and their associated thresholds.

The overall objectives of the process are to:

- improve the objectivity of the oversight processes so that subjective decisions and judgment are not central process features,
- improve the scrutability of the NRC assessment process so that NRC actions have a clear tie to licensee performance, and
- risk-inform the regulatory assessment process so that NRC and licensee resources are focused on those aspects of performance having the greatest impact on safe plant operation.

In identifying those aspects of licensee performance that are important to the NRC's mission, adequate protection of public health and safety, the NRC set high level performance goals for regulatory oversight. These goals are:

- maintain a low frequency of events that could lead to a nuclear reactor accident;
- zero significant radiation exposures resulting from civilian nuclear reactors;
- no increase in the number of offsite releases of radioactive material from civilian nuclear reactors that exceed 10 CFR Part 20 limits; and
- no substantiated breakdown of physical protection that significantly weakens protection against radiological sabotage, theft, or diversion of special nuclear materials.

These performance goals are represented in the new assessment framework as the strategic performance areas of Reactor Safety, Radiation Safety, and Safeguards.

Figure 1.0 provides a graphical representation of the licensee assessment process.

General Reporting Guidance

At quarterly intervals, each licensee will submit to the NRC the performance assessment data described in this guideline. The data is submitted electronically to the NRC by the 21st calendar day of the month following the end of the reporting quarter. If a submittal date falls on a Saturday, Sunday, or federal holiday, the next federal working day becomes the official due date (in accordance with 10 CFR 50.4). The format and examples of the data provided in each subsection show the complete data record for an indicator, and provide a chart of the indicator. These are provided for illustrative purposes only. Each licensee only sends to the NRC the data set from the previous quarter, as defined in each *Data Reporting Elements* subsection (See Appendix B) along with any changes to previously submitted data.

The reporting of performance indicators is a separate and distinct function from other NRC reporting requirements. Licensees will continue to submit other regulatory reports as required by regulations; such as, 10 CFR 50.72 and 10 CFR 50.73.

Performance indicator reports are submitted to the NRC for each power reactor unit. Some indicators are based on station parameters. In these cases the station value is reported for each power reactor unit at the station.

Issues regarding interpretation or implementation of NEI 99-02 guidance may occur during ~~initial~~ implementation. Licensees are encouraged to resolve these issues with the Region. In those instances where the NRC staff and the Licensee are unable to reach resolution, the issue should be escalated to appropriate industry and NRC management using the FAQ process. In the interim period until the issue is resolved, the Licensee is encouraged to maintain open communication with the NRC. Issues involving enforcement are not included in this process.

Guidance for Correcting Previously Submitted Performance Indicator Data

In instances where data errors or a newly identified faulted condition are determined to have occurred in a previous reporting period, previously submitted indicator data are amended only to the extent necessary to correctly calculate the indicator(s) for the current reporting period.[1] This amended information is submitted using a "change report" following the guidance provided on the NEI performance indicator website (PIWeb) in the "edit" mode. For performance indicators with a long data evaluation period, e.g., 12 quarters, and depending on which reporting period the data error affects, the amended data may go back into the historical data period. The values of previous reporting periods are revised, as appropriate, when the amended data is used by the NRC to recalculate the affected performance indicator. The current report should reflect the new information, as discussed in the detailed sections of this document. In these cases, the quarterly data report should include a comment to indicate that the indicator values for past reporting periods are different than previously reported. If an LER was required and the number is available at the time of the report, the LER reference is noted.

If a performance indicator data reporting error is discovered, an amended "mid-quarter" report does not need to be submitted if both the previously reported and amended performance indicator values are within the "green" performance indicator band. In these instances, corrected data should be included in the next quarterly report along with a brief description of the reason for the change(s). If a performance indicator data error is discovered that causes a threshold to be crossed, a "mid-quarter" report should be submitted as soon as practical following discovery of the error.

In January 2000, all licensees submitted "historical performance indicator data" to support the start of the revised regulatory oversight process. This data was used by the NRC to validate performance indicator thresholds and to develop licensee inspection schedules for the revised process. The January submittal represented a "best effort" to collect and report historical data. Safety system unavailability data reported as part of the WANO performance indicators was allowed to be used without modification. A supplemental review of the WANO data to ensure it met applicable NEI 99-02 guidance was not required for the January historical data submittal. Errors in the historical data submission for any performance indicator, found subsequent to January 2000, do not require correction except as described above.

~~In instances where a newly identified faulted condition is determined to have occurred in a previous reporting period, previously submitted indicator data are amended only to the extent necessary to correctly calculate the indicators for the current reporting period. The current report should reflect the new information, as discussed in the detailed sections of this document. In these cases, the quarterly data report should include a comment to indicate that the indicator values for past reporting periods are different than previously reported. If available at the time of the report, the LER reference is noted.~~

[1] Changes to data collection rules or practices required by the current revision of this document will not be applied retroactively to previously submitted data. Previously submitted data will not require correction or amendment provided it was collected and reported consistent with the NEI 99-02 revision and FAQ guidance in effect at the time of submittal.

Comment Fields

The quarterly report allows comments to be included with performance indicator data. A general comment field is provided for comments pertinent to the quarterly submittal that are not specific to an individual performance indicator. A separate comment field is provided for each performance indicator. Comments included in the report should be brief and understandable by the general public. Comments provided as part of the quarterly report will be included along with performance indicator data as part of the NRC Public Web site on the oversight program. If multiple PI comments are received by NRC that are applicable to the same unit/PI/quarter, the NRC Public Web site will display all applicable comments for the quarter in the order received (e.g., If a comment for the current quarter is received via quarterly report and a comment for the same PI is received via a change report, then both comments will be displayed on the Web site. For General Comments, the NRC Public Web site will display only the latest "general" comment received for the current quarter (e.g., A "general" comment received via a change report will replace any "general" comment provided via a previously submitted quarterly report.)

Comments should be generally limited to instances as directed in this guideline. These instances include:

- Exceedance of a threshold (Comment should include a brief explanation and should be repeated in subsequent quarterly reports as necessary to address the threshold exceedance)
- Revision to previously submitted data (Comment should include a brief characterization of the change, should identify affected time periods and should identify whether the change affects the "color" of the indicator.)
- Identification of a design deficiency affecting safety system unavailability (See Safety System Unavailability discussion on fault exposure unavailable hours)
- Resetting of fault exposure hours (See Safety System Unavailability discussion on resetting fault exposure hours)
- Unavailability of data for quarterly report (Examples include unavailability of RCS Activity data for one or more months due to plant conditions that do not require RCS activity to be calculated.)

In specific circumstances, some plants, because of unique design characteristics, may typically appear in the "increased regulatory response band," as shown in Table 1. In such cases the unique condition and the resulting impact on the specific indicator should be explained in the associated comment field. Additional guidance is provided under the appropriate indicator sections.

The quarterly data reports are submitted to the NRC under 10 CFR 50.4 requirements. The quarterly reports are to be submitted in electronic form only. Separate submittal of a paper copy is not requested. Licensees should apply standard commercial quality practices to provide reasonable assurance that the quarterly data submittals are correct. Licensees should plan to retain the data consistent with the historical data requirements for each performance indicator. For example, data associated with the barrier cornerstone should be retained for 12 months, data for safety system unavailability should be retained for 12 quarters.

The criterion for reporting is based on the time the failure or deficiency is identified, with the exception of the Safety System Functional Failure indicator, which is based on the Report Date of the LER. In some cases the time of failure is immediately known, in other cases there may be a

time-lapse while calculations are performed to determine whether a deficiency exists, and in some instances the time of occurrence is not known and has to be estimated. Additional clarification is provided in specific indicator sections.

~~Applicability of NEI 99-02 Revision 0~~

~~The guidance provided in Revision 0 to NEI 99-02 is to be applied on a forward fit basis and should be utilized in the preparation and submittal of performance indicator data for 2nd quarter 2000 and beyond. Guidance contained in NEI 99-02 Draft Revision D or NEI 99-02 Revision 0 should be utilized for 1st quarter 2000 data. Performance indicator data submitted prior to the issuance of Revision 0 of this guideline (i.e., data collected and submitted using guidance in a previous version of NEI 99-02) may be revised and resubmitted to reflect current guidance if desired. However, revisions of previously submitted data that are the result of changes to guidance alone, are not required. Performance indicator data collections and submittals that supported the January 2000 data submittal were performed as a "best effort" to collect and report historical data. The guidance contained in Draft Revision D of NEI 99-02, relative to the "best effort" collection and reporting of historical data, continues to apply to the data submitted in January 2000.~~

Numerical Reporting Criteria

Final calculations are rounded up or down to the same number of significant figures as shown in Table 1. Where required, percentages are reported and noted as: 9.0%, 25%.

Submittal of Performance Indicator Data

Performance indicator data should be submitted as a delimited text file (data stream) for each unit, attached to an email addressed to pidata@nrc.gov. The structure and format of the delimited text files is discussed in Appendix B. The email message can include report files containing PI data for the quarter (quarterly reports) for all units at a site and can also include any report file(s) providing changes to previously submitted data (change reports). The title/subject of the email should indicate the unit(s) for which data is included, the applicable quarter, and whether the attachment includes quarterly report(s) (QR), change report(s) (CR) or both. The recommended format of the email message title line is "<Plant Name(s)>-<quarter/year>-PI Data Elements (QR and/or CR)" (e.g., "Salem Units 1 and 2 – 1Q2000 – PI Data Elements (QR)"). Licensees should not submit hard copies of the PI data submittal (with the possible exception of a back up if the email system is unavailable).

The NRC will send return emails with the licensee's submittal attached to confirm and authenticate receipt of the proper data, generally within 2 business days. The licensee is responsible for ensuring that the submitted data is received without corruption by comparing the response file with the original file. Any problems with the data transmittal should be identified in an email to pidata@nrc.gov within 4 business days of the original data transmittal.

Additional guidance on the collection of performance indicator data and the creation of quarterly reports and change reports is provided at the NEI performance indicator website (PIWeb).

The reports made to the NRC under the new regulatory assessment process are in addition to the standard reporting requirements prescribed by NRC regulations.

Frequently Asked Questions

Frequently Asked Questions (FAQ) and responses regarding interpretations of this guideline ~~are provided within the FAQ subsections of this guideline for FAQs specific to a performance indicator and as part of Appendix C for FAQs that are not specific to a particular performance indicator. FAQs that receive NRC approval between guideline revisions~~ will be posted on the NRC Website (www.nrc.gov/NRR/OVERSIGHT/ASSESS/index.html). ~~The FAQs provided in this guideline as well as~~ FAQs posted on the NRC Website represent NRC approved interpretations of performance indicator guidance and should be treated as an ~~adjunct~~ extension of NEI 99-02.

The NRC Website will identify the date of original posting for FAQs and responses. Unless otherwise directed in an FAQ response, FAQs are to be applied to the data submittal for the quarter in which the FAQ was posted and beyond. For example, an FAQ with a posting date of 3/31/2000 would apply to 1st quarter 2000 PI data, submitted in April 2000 and subsequent data submittals. However, an FAQ with a posting date of 4/1/2000 would apply on a forward fit basis to 2nd quarter 2000 PI data submitted in July 2000. Licensees are encouraged to check the NRC Web site frequently, particularly at the end of the reporting period, for FAQs that may have applicability for their sites.

Questions on this guideline may be submitted by email to pihelp@nei.org. The email should include "FAQ" as part of the subject line. The emails should also provide the question and a proposed answer as well as the name and phone number of a contact person. The proposed question and answer will be reviewed by NEI staff and will be discussed with NRC staff at a public meeting. Once approved by NRC, the accepted response will be posted on the NRC Website and incorporated into the text of this guideline when the next revision is issued (no more frequently than once per quarter).

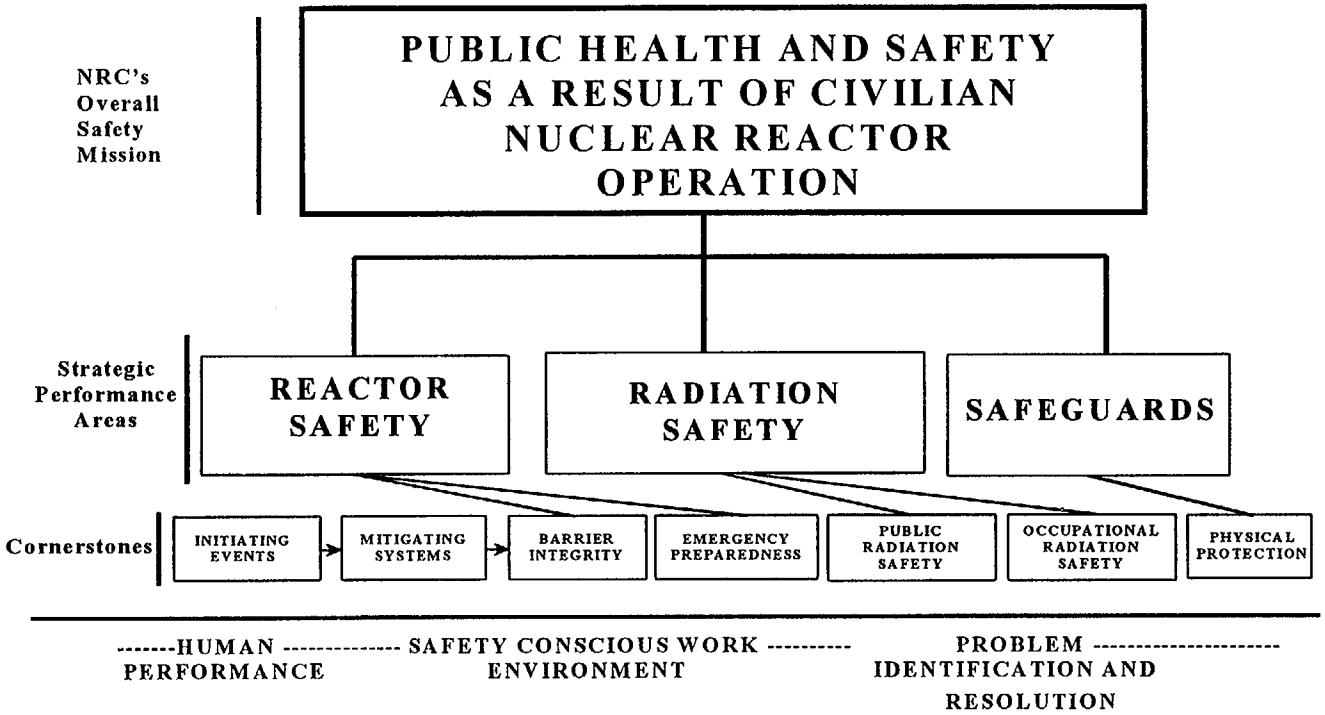

Figure 1 - Regulatory Oversight Framework

Table 1 – PERFORMANCE INDICATORS					
Cornerstone	**Indicator**		**Thresholds (see Note 1)**		
			Increased Regulatory Response Band	**Required Regulatory Response Band**	**Unacceptable Performance Band**
Initiating Events	Unplanned Scrams per 7000 Critical Hours (automatic and manual scrams during the previous four quarters)		>3.0	>6.0	>25.0
	Scrams with a Loss of Normal Heat Removal (over the previous 12 quarters)		>2.0	>10.0	>20.0
	Unplanned Power Changes per 7000 Critical Hours (over previous four quarters)		>6.0	N/A	N/A
Mitigating Systems	Safety System Unavailability (SSU) (average of previous 12 quarters)	**All Plants**			
		≤2EDG	>2.5%	>5.0%	>10.0%
		>2EDG	>2.5%	>10.0%	>20.0%
		Hydro Emerg. Power	TBD	TBD	TBD
		BWRs			
		HPCI	>4.0%	>12.0%	>50.0%
		HPCS	>1.5%	>4.0%	>20.0%
		RCIC	>4.0%	>12.0%	>50.0%
		RHR	>1.5%	>5.0%	>10.0%
		PWRs			
		HPSI	>1.5%	>5.0%	>10.0%
		AFW	>2.0%	>6.0%	>12.0%
		RHR	>1.5%	>5.0%	>10.0%
	Safety System Functional Failures (over previous four quarters)	BWRs	>6.0	N/A	N/A
		PWRs	>5.0	N/A	N/A

Note 1: Thresholds that are specific to a site or unit will be provided in Appendix D when identified.

Table 1 - PERFORMANCE INDICATORS Cont'd

Cornerstone	Indicator	Thresholds (see Note 1)		
		Increased Regulatory Response Band	Required Regulatory Response Band	Unacceptable Performance Band
Barriers Fuel Cladding	Reactor Coolant System (RCS) Specific Activity (maximum monthly values, percent of Tech. Spec limit, during previous four quarters)	>50.0%	>100.0%	N/A
Reactor Coolant System	RCS Identified Leak Rate (maximum monthly values, percent f Tech. Spec. limit, during previous four quarters)	>50.0%	>100.0%	N/A
Emergency Preparedness	Drill/Exercise Performance (over previous eight quarters)	<90.0%	<70.0%	N/A
	ERO Drill Participation (percentage of Key ERO personnel that have participated in a drill or exercise in the previous eight quarters)	<80.0%	<60.0%	N/A
	Alert and Notification System Reliability (percentage reliability during previous four quarters)	<94.0%	<90.0%	N/A
Occupational Radiation Safety	Occupational Exposure Control Effectiveness (occurrences during previous 4 quarters)	>2	>5	N/A
Public Radiation Safety	RETS/ODCM Radiological Effluent Occurrence (occurrences during previous four quarters)	>1	>3	N/A
Physical Protection	Protected Area Security Equipment Performance Index (over a four quarter period)	>0.080	N/A	N/A
	Personnel Screening Program Performance (reportable events during the previous four quarters)	>2	>5	N/A
	Fitness-for-Duty (FFD)/Personnel Reliability Program Performance (reportable events during the previous four quarters)	>2	>5	N/A

Note 1: Thresholds that are specific to a site or unit will be provided in Appendix D when identified.

2 PERFORMANCE INDICATORS

2.1 INITIATING EVENTS CORNERSTONE

The objective of this cornerstone is to limit the frequency of those events that upset plant stability and challenge critical safety functions, during shutdown[2] as well as power operations. If not properly mitigated, and if multiple barriers are breached, a reactor accident could result which may compromise the public health and safety. Licensees can reduce the likelihood of a reactor accident by maintaining a low frequency of these initiating events. Such events include reactor scrams due to turbine trips, loss of feedwater, loss of off-site power, and other significant reactor transients.

The indicators for this cornerstone are reported and calculated per reactor unit.

There are three indicators in this cornerstone:

- Unplanned (automatic and manual) scrams per 7,000 critical hours
- Scrams with a loss of normal heat removal per 12 quarters
- Unplanned Power Changes per 7,000 critical hours

UNPLANNED SCRAMS PER 7,000 CRITICAL HOURS

Purpose

This indicator monitors the number of unplanned scrams. It measures the rate of scrams per year of operation at power and provides an indication of initiating event frequency.

Indicator Definition

The number of unplanned scrams during the previous four quarters, both manual and automatic, while critical per 7,000 hours[3].

Data Reporting Elements

The following data is reported for each reactor unit:

- the number of unplanned automatic and manual scrams while critical in the previous quarter
- the number of hours of critical operation in the previous quarter

Calculation

The indicator is determined using the values for the previous four quarters as follows:

[2]Shutdown indicators are being developed and will be included in later revisions.

[3] The transient rate is calculated per 7,000 critical hours because that value is representative of the critical hours of operation in a year for a typical plant.

$$\text{value} = \frac{(\text{total unplanned scrams while critical in the previous 4 qtrs}) \times 7{,}000 \text{ hrs}}{(\text{total number of hours critical in the previous 4 qtrs})}$$

Definition of Terms

Scram means the shutdown of the reactor by the rapid addition of negative reactivity by any means, e.g., insertion of control rods, boron, use of diverse scram switch, or opening reactor trip breakers.

Unplanned scram means that the scram was not an intentional part of a planned evolution or test as directed by a normal operating or test procedure. This includes scrams that occurred during the execution of procedures or evolutions in which there was a high chance of a scram occurring but the scram was neither planned nor intended.

Criticality, for the purposes of this indicator, typically exists when a licensed reactor operator declares the reactor critical. There may be instances where a transient initiates from a subcritical condition and is terminated by a scram after the reactor is critical—this condition would count as a scram.

Clarifying Notes

The value of 7,000 hours is used because it represents one year of reactor operation at an 80.0% capacity factor.

If there are fewer than 2,400 critical hours in the previous four quarters the indicator value is computed as N/A because rate indicators can produce misleadingly high values when the denominator is small. The data elements (unplanned scrams and critical hours) are still reported.

Dropped rods, single rod scrams, or half scrams are not considered reactor scrams.

Anticipatory plant shutdowns intended to reduce the impact of external events, such as tornadoes or range fires threatening offsite power transmission lines, are excluded.

Examples of the types of scrams that **are included**:

- Scrams that resulted from unplanned transients, equipment failures, spurious signals, human error, or those directed by abnormal, emergency, or annunciator response procedures.
- A scram that is initiated to avoid exceeding a technical specification action statement time limit.
- A scram that occurs during the execution of a procedure or evolution in which there is a high likelihood of a scram occurring but the scram was neither planned nor intended.

Examples of scrams that **are not** included:

- Scrams that are planned to occur as part of a test (e.g., a reactor protection system actuation test), or scrams that are part of a normal planned operation or evolution.

- Reactor protection system actuation signals that occur while the reactor is sub-critical.

- Scrams that occur as part of the normal sequence of a planned shutdown and scram signals that occur while the reactor is shut down.

- Plant shutdown to comply with technical specification LCOs, if conducted in accordance with normal shutdown procedures which include a manual scram to complete the shutdown.

~~Frequently Asked Questions~~

~~ID~~ ~~Question~~

~~5~~ ~~The Clarifying Notes for the Unplanned Scrams per 7000hrs P1 state that scrams that are included are: scrams "that resulted from unplanned transients...." and a "scram that is initiated to avoid exceeding a technical specification action statement time limit." and, scrams that are not included are "scrams that are part of a normal planned operation or evolution" and, scrams "that occur as part of the normal sequence of a planned shutdown...." If a licensee enters an LCO requiring the plant to be in Mode 2 within 7 hours, applies a standing operational procedure for assuring the LCO is met, and a manual scram is executed in accordance with that procedure, is this event counted as an unplanned scram?~~

~~Response~~

~~If the plant shutdown to comply with the Technical Specification LCO, was conducted in accordance with the normal plant shutdown procedure, which includes a manual scram to complete the shutdown, the scram would not be counted as an unplanned scram. However, the power reduction would be counted as an unplanned transient (assuming the shutdown resulted in a power change greater than 20%) However, if the actions to meet the Technical Specification LCO required a manual scram outside of the normal plant shutdown procedure, then the scram would be counted as an unplanned scram.~~

~~ID~~ ~~Question~~

~~159~~ ~~With the Unit in Operational Condition 2 (Startup) a shutdown was ordered due to an insufficient number of operable Intermediate Range Monitors (IRM). The reactor was critical at 0% power. "B" and "D" IRM detectors failed, and a plant shutdown was ordered. The manual scram was inserted in accordance with the normal shutdown procedure. Should this count as an unplanned reactor scram?~~

~~Response~~

~~No. If part of a normal shutdown, (plant was following normal shut down procedure) the scram would not count.~~

Data Example

Unplanned Scrams per 7,000 Critical Hours									
	2Q/97	3Q/97	4Q/97	1Q/98	2Q/98	3Q/98	4Q/98	Prev. Qtr	
# of Scrams critical in qtr	1	0	0	1	1	1	2	2	
Total Scrams over 4 qtrs				2	2	3	5	6	
# of Hrs Critical in qtr	1500	1000	2160	2136	2160	2136	2136	1751	
Total Hrs Critical in 4 qtrs				6796	7456	8592	8568	8183	
					2Q/98	3Q/98	4Q/98	Prev. Q	
Indicator value					1.9	2.4	4.1	5.1	

Thresholds	
Green	≤3.0
White	>3.0
Yellow	>6.0
Red	>25.0

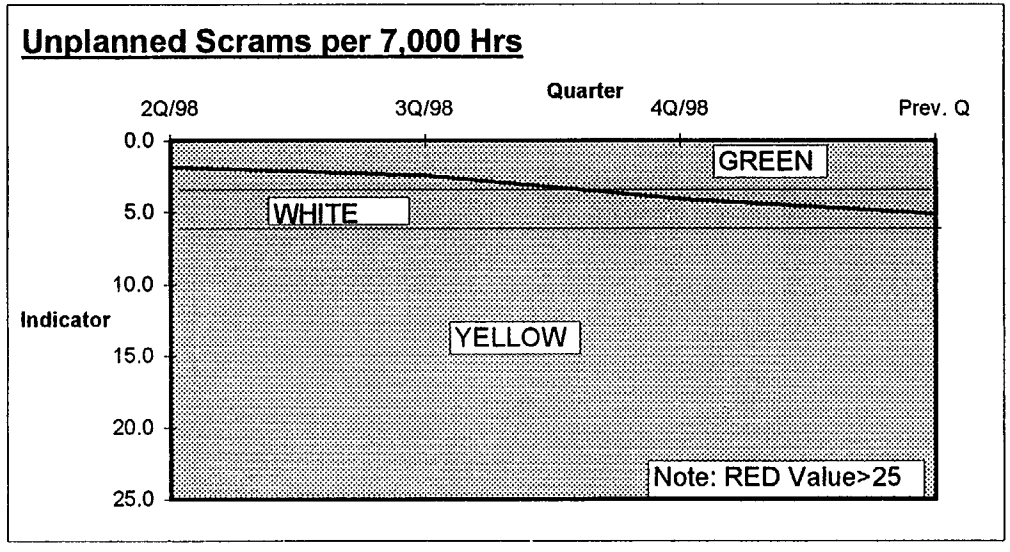

SCRAMS WITH A LOSS OF NORMAL HEAT REMOVAL

Purpose

This indicator monitors that subset of unplanned and planned automatic and manual scrams that necessitate the use of mitigating systems and are therefore more risk-significant than uncomplicated scrams.

Indicator Definition

The number of unplanned and planned scrams while critical, both manual and automatic, during the previous 12 quarters that also involved a loss of the normal heat removal path through the main condenser prior to establishing reactor conditions that allow use of the plant's normal long term heat removal systems.

Data Reporting Elements

The following data is reported for each reactor unit:

- the number of planned and unplanned automatic and manual scrams while critical in the previous quarter in which the normal heat removal path through the main condenser was lost prior to establishing reactor conditions that allow use of the plant's normal long term heat removal systems

Calculation

The indicator is determined using the values reported for the previous 12 quarters as follows:

value = total scrams while critical in the previous 12 quarters in which the normal heat removal path through the main condenser was lost prior to establishing reactor conditions that allow use of the plant's normal long term heat removal systems.

Definition of Terms

Normal heat removal path: For purposes of this performance indicator, the path used for heat removal from the reactor during normal plant operations. It is the same for all plants – the path from the main condenser through the main feedwater system, steam generators (or reactor vessel), the main steam isolation valves, and back to the main condenser.

Loss of the normal heat removal path: when any of the following conditions have occurred and cannot be easily recovered from the control room without the need for diagnosis or repair to restore the normal heat removal path~~decay heat cannot be removed through the main condenser when any of the following conditions occur~~:

- complete loss of all main feedwater
- insufficient ~~loss of~~ main condenser vacuum to remove decay heat
- complete closure of at least one main steam isolation valves in each main steam line

- failure ~~loss~~ of turbine bypass ~~capability~~ capacity that results in insufficient bypass capability remaining to maintain reactor temperature and pressure

Scram means the shutdown of the reactor by the rapid addition of negative reactivity by any means, e.g., insertion of control rods, boron, use of diverse scram switch, or opening reactor trip breakers.

Criticality, for the purposes of this indicator, typically exists when a licensed reactor operator declares the reactor critical. There may be instances where a transient initiates from a subcritical condition and is terminated by a scram after the reactor is critical—this condition would count as a scram.

Clarifying Notes

Intentional operator actions to control the reactor water level or cooldown rate, such as securing main feedwater or closing the MSIVs, are not counted in this indicator, as long as the normal heat removal path can be easily recovered from the control room without the need for diagnosis or repair to restore the normal heat removal path. Once reaching stable plant conditions following a scram, the shutdown of main feedwater pumps in accordance with operating procedures would not count in this indicator.

Design features to limit the reactor water level, steam generator water level, or cooldown rate, such as closing the main feedwater valves on a reactor scram, are not counted in this indicator, as long as the normal heat removal path can be easily recovered from the control room -without the need for diagnosis or repair to restore the normal heat removal path. Once reaching stable plant conditions following a scram, the shutdown of main feedwater pumps in accordance with operating procedures would not count in this indicator.

Events in which the normal heat removal path through the main condenser is not available and is not easily recoverable from the control room without the need for diagnosis or repair to restore the normal heat removal path are counted in this indicator.

Partial losses of condenser vacuum in which sufficient capability remains to remove decay heat are not counted in this indicator.

This indicator includes planned and unplanned scrams. Unplanned scrams counted for this indicator are also counted for the *Unplanned Scrams per 7000 Critical Hours* indicator.

Scrams with loss of normal heat removal at low power within the capability of the PORVs are not counted if the main condenser has not yet been placed in service, or has been removed from service.

Momentary operations of PORVs or safety relief valves are not counted as part of this indicator.

~~Frequently Asked Questions~~

~~ID~~ ~~Question~~

4 ~~The NEI 99-02 instructions for Scrams With Loss of Normal Heat Removal (LONHR) equate LONHR with "loss of main feedwater." At some plants the feedwater pumps trip on high reactor water level, which normally occurs on most scrams. To prevent the feedwater pumps from tripping on a scram, the operator has to quickly take manual control of level. Since the operators often have more important concerns during a scram (e.g., trying to figure out what happened, verifying all the rods are in, etc.) they have been instructed (correctly) to let the pumps trip. When this occurs steam continues to flow to the condenser and make up to the reactor is accomplished using other means (e.g., CRD pumps). Does this count as a hit against the LONHR indicator?~~

~~Response~~

~~In this instance, because the system actions and operator response for this plant are normal expected actions following a scram, this would not count against the LONHR indicator.~~

~~ID~~ ~~Question~~

~~65~~ ~~Scrams with a Loss of Normal Heat Removal~~

~~Does the Scrams with a Loss of Normal Heat Removal PI include main condenser perturbations that result in scrams. For example, if a scram occurs due to a partial or total loss of main feedwater and then, as expected, main feedwater is isolated as part of the plant design following the scram, does this count as a Scram with a Loss of Normal Heat Removal. Similarly, do scrams that occur due to a partial loss of condenser vacuum affect this PI.~~

~~Response~~

~~The PI is monitoring the use of alternate means of decay heat removal following a scram. Therefore, the described feedwater scenario would not be included in the PI. Similarly, a partial loss of condenser vacuum that results in a scram yet provides adequate decay heat removal following the scram would not be included in the PI.~~

~~ID~~ ~~Question~~

~~142~~ ~~Under the "Scram with Loss of Normal Heat Removal" performance indicator in NEI 99-02 Draft D, the Definition of Terms states that a "loss of normal heat removal path" has occurred whenever any of the following conditions occur:~~

~~loss of main feedwater~~
~~loss of main condenser vacuum~~
~~closure of main steam isolation valves~~
~~loss of turbine bypass capability~~

~~The purpose of the indicator is to count scrams that require the use of mitigating systems, however, instances that meet the above criteria in a literal sense could occur without the necessity of using mitigating systems.~~

~~For example, a short term loss of main feedwater injection capability due to pump trip on high reactor water level post scram is a common BWR event. Under these conditions, there is ample time to restart the main feed pumps before addition of water to the vessel via HPCI or RCIC is required.~~

~~A second example would be a case where the turbine bypass valves (also commonly called steam dump valves) themselves are unavailable, but sufficient steam flow path to the main condenser exists via alternate paths (such as steam line drains, feed pump turbine exhausts, etc.) such that no mitigating systems are called upon.~~

~~Response~~

~~If an alternate heat removal system is put into use, it counts toward the performance indicator.~~

Data Examples

Scrams with Loss of Normal Heat Removal

	3Q/95	4Q/95	1Q/96	2Q/96	3Q/96	4Q/96	1Q/97	2Q/97	3Q/97	4Q/97	1Q/98	2Q/98	3Q/98	4Q/98	Prev. Qrtr
# of Scrams with loss of Normal	0	1	0	0	0	0	0	0	0	0	0	0	0	0	0
Heat Sink in previous quarter															
Total Scrams over 12 qtrs												1	1	0	0
												2Q/98	3Q/98	4Q/98	Prev. Q
Indicator value												1	1	0	0

Thresholds	
Green	≤2.0
White	>2.0
Yellow	>10.0
Red	>20.0

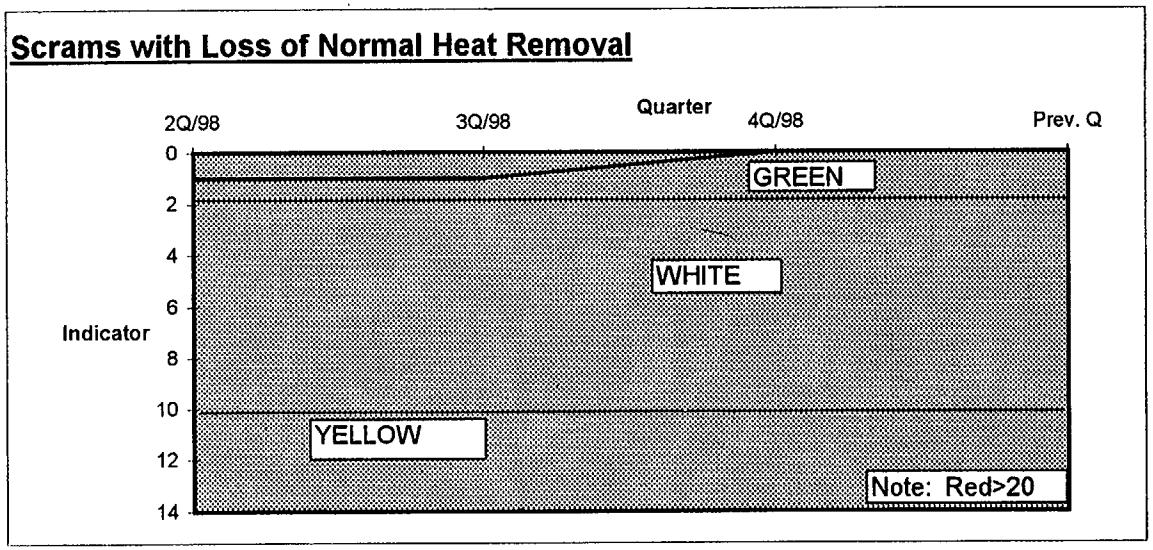

UNPLANNED POWER CHANGES PER 7,000 CRITICAL HOURS

Purpose

This indicator monitors the number of unplanned power changes (excluding scrams) that could have, under other plant conditions, challenged safety functions. It may provide leading indication of risk-significant events but is not itself risk-significant. The indicator measures the number of plant power changes for a typical year of operation at power.

Indicator Definition

The number of unplanned changes in reactor power of greater than 20% of full-power, per 7,000 hours of critical operation excluding manual and automatic scrams.

Data Reporting Elements

The following data is reported for each reactor unit:

- the number of unplanned power changes, excluding scrams, during the previous quarter
- the number of hours of critical operation in the previous quarter

Calculation

The indicator is determined using the values reported for the previous four quarters as follows:

$$\text{value} = \frac{\text{(total number of unplanned power changes over the previous 4 qtrs)}}{\text{total number of hours critical during the previous 4 qtrs}} \times 7{,}000 \text{ hrs}$$

Definition of Terms

Unplanned changes in reactor power are changes in reactor power that are initiated less than 72 hours following the discovery of an off-normal condition, and that result in, or require a change in power level of greater than 20% of full power to resolve. Unplanned changes in reactor power also include uncontrolled excursions of greater than 20% of full ~~in reactor~~ power that occur in response to changes in reactor or plant conditions and are not an expected part of a planned evolution or test.

Clarifying Notes

If there are fewer than 2,400 critical hours in the previous four quarters the indicator value is computed as N/A because rate indicators can produce misleadingly high values when the denominator is small. The data elements (unplanned power changes and critical hours) are still reported.

The 72 hour period between discovery of an off-normal condition and the corresponding change in power level is based on the typical time to assess the plant condition, and prepare, review, and approve the necessary work orders, procedures, and necessary safety reviews, to effect a repair. The key element to be used in determining whether a power change should be counted as part of this indicator is the 72 hour period and not the extent of the planning that is performed between the discovery of the condition and initiation of the power change.

In developing a plan to conduct a power reduction, additional contingency power reductions may be incorporated. These additional power reductions are not counted if they are implemented to address the initial condition.

Equipment problems encountered during a planned power reduction greater than 20% that alone may have required a power reduction of 20% or more to repair are not counted as part of this indicator if they are repaired during the planned power reduction. However, if during the implementation of a planned power reduction, power is reduced by more than 20% of full power beyond the planned reduction, then an unplanned power change has occurred.

Unplanned power changes and shutdowns include those conducted in response to equipment failures or personnel errors and those conducted to perform maintenance. They do not include automatic or manual scrams or load-follow power changes.

Apparent power changes that are determined to be caused by instrumentation problems are not included.

~~Examples of~~Unplanned power changes ~~are~~include runbacks and power oscillations greater than 20% of full power.

Anticipatory power reductions intended to reduce the impact of external events such as hurricanes or range fires threatening offsite power transmission lines, and power changes requested by the system load dispatchers, are excluded.

Anticipated power changes greater than 20% in response to expected problems (such as accumulation of marine debris and biological contaminants in certain seasons) which are proceduralized but cannot be predicted greater than 72 hours in advance may not need to be counted if they are not reactive to the sudden discovery of off-normal conditions. The circumstances of each situation are different and should be identified to the NRC in a FAQ so that a determination can be made concerning whether the power change should be counted.

Power changes to make rod pattern adjustments are excluded.

Power changes directed by the load dispatcher under normal operating conditions due to load demand and economic reasons, and for grid stability or nuclear plant safety concerns arising from external events outside the control of the nuclear unit are not included in this indicator. However, power reductions due to equipment failures that are under the control of the nuclear unit are included in this indicator.

Licensees should use the power indication that is used to control the plant to determine if a change of greater than 20% of full power has occurred.

This indicator captures changes in reactor power that are initiated following the discovery of an off-normal condition. If a condition is identified that is slowly degrading and the licensee prepares plans to reduce power when the condition reaches a predefined limit, and 72 hours have elapsed since the condition was first identified, the power change does not count. If, however, the condition suddenly degrades beyond the predefined limits and requires rapid response, this situation would count.

Off-normal conditions that begin with one or more power reductions and end with an unplanned reactor trip are counted in the unplanned reactor scram indicator only. If an off-normal condition occurs above 20% power, and the plant is shutdown by a planned reactor trip using normal operating procedures, only an unplanned power change is counted.

~~Frequently Asked Questions~~

~~ID~~ ~~Question~~

~~1~~ ~~Preplanned Contingency Power Changes~~

~~If a reduction from 100% to 70% is planned, and an additional 25% must occur if the situation is worse than expected, can a licensee preplan (at the time of preplanning the 30% reduction) a "second contingency step planning" for the additional 25%.~~

~~Response~~

~~The 72-hour planning period is used as a mark to indicate that necessary planning has occurred to address the proposed power change. This planning may include contingency power changes that would not be counted toward the performance indicator.~~

~~ID~~ ~~Question~~

~~2~~ ~~Overshoot of Planned Power Reduction~~

~~If a licensee plans to reduce from 100% to 85% (15% reduction) but due to equipment malfunction (boron dilution) overshoots and reduces to 70%. Since 15% was already planned, is the overall transient considered (100-70) = 30% and counted as a "hit"), or is it only for transients beyond that planned (85-70 = 15% and not counted as a "hit")?~~

~~Response~~

~~The Unplanned Power Changes Performance Indicator addresses changes in reactor power that are not an expected part of a planned evolution or test. In the proposed example, the unplanned portion of the power evolution resulted in a 15% change in power and would not count toward the performance indicator.~~

~~ID~~ ~~Question~~

~~3~~ ~~Does the 20% power change rule apply to an uncontrolled excursion or are any uncontrolled excursions counted? Our specific example is: Unit 1 experienced an uncontrolled power excursion from 100% to 100.3% due to a high level feed water heater dump valve failure.~~

~~Response~~

~~The performance indicator counts any unplanned changes in reactor power greater than 20% of full power. In your example, the excursion does not exceed 20% and would thus not be counted under this performance indicator.~~

1

~~ID~~ ~~Question~~

6 ~~Relative to power reductions greater than 20%, the difference between planned versus unplanned maintenance seems to be the 72-hour timeframe. In that context, we may have a situation whereby a main steam relief valve tailpipe temperature sensor is indicating a leak. The temperature is monitored and plans are made for repairs. Because the valve is located inside primary containment (inerted with nitrogen for fire protection reasons) a range of contingencies is prepared, including the replacement of the relief valve. The monitoring continues (days/weeks beyond 72 hours from problem identification) until an administratively established limit for tailpipe temperature is achieved — at which time a plant shutdown is initiated (power reduction greater than 20%). Would this reduction be counted as an unplanned power reduction greater than 20%? A similar situation could exist for reactor coolant leakage monitoring. We have two types of leakage — equipment leakage (identified) and floor leakage (unidentified) inside primary containment. The leakage is monitored twice per shift. At some point, indications suggest that a recirculation pump (inside containment) seal is degrading. The indications are flow to the seal and an increase in floor leakage (unidentified). Past experience and the indications conclude the floor leakage is due to recirculation pump seal degradation. Plans are made to replace or repair the seal if administratively established limits are met or exceeded (not Tech Spec). This would require a plant shutdown. The indications are monitored. The indications continue (days/weeks beyond 72 hours from problem identification) until the administrative limit is achieved. A plant shutdown (power reduction greater than 20%). Would this be counted as an unplanned power reduction greater than 20%?~~

~~Response~~

~~The cases described would not be counted in the unplanned power changes indicator. In both of the cases described, the time period between discovery of an off-normal condition (i.e., main steam relief valve leakage and possible recirculation pump seal degradation) exceeded 72 hours. This allowed for assessment of plant conditions, preparation and review in anticipation of an orderly power reduction and shutdown.~~

2

3

~~ID~~ ~~Question~~

~~156~~ ~~For a situation where an unplanned runback (greater than 20%) is properly terminated by a trip (since the runback was unable to reduce power rapidly enough), should the event be counted as both an Unplanned Power Change and an Unplanned Scram?~~

~~Response~~

~~No.~~

4

~~ID~~ ~~Question~~

~~157~~ ~~Power was reduced on three consecutive days for condenser cleaning, in accordance with established contingency plans for zebra mussel fouling of the main condenser. Should these power reductions count as unplanned power changes, since the 72-hour planning window discussed in NEI 99-02 was not met for each individual reduction?~~

~~Response~~

~~See response for FAQ 158~~

~~1 Question~~

~~1 Power changes (reductions) in excess of 20%, while not routinely initiated, are not uncommon during summer hot weather conditions when conducting the standard condenser backwashing evolution for our once though, salt water cooled plant. While it is known that backwashing will be performed multiple times a week during warm weather months (and less frequently during colder months), the specific timing of any individual backwash is not predictable 72 hours in advance as the accumulation of marine debris and the growth rate of biological contaminants drives the actual initiation of each evolution. The main condenser system was specifically designed to allow periodic cleaning by backwash which is procedurally controlled to assure sufficient vacuum is maintained. It is sometimes necessary, due to high inlet temperatures, to reduce power more than 20% to meet procedural requirements during the backwash evolution. Similarly, load reductions during very hot weather are sometimes necessary if condenser discharge temperatures approach our NPDES Permit limit. Actual initiation of a power change is not predictable 72 hours in advance as actions are not taken until temperatures actually reach predefined levels. Would power changes in excess of 20% driven by either of these causes be counted for this indicator?~~

~~Response~~

~~No. If they were anticipated and planned evolutions and not reactive to the sudden discovery of off normal conditions they would not count. The circumstances of each situation are different and should be identified to the NRC so that a determination can be made concerning whether a power change is counted.~~

Data Example

Unplanned Power Changes per 7,000 Critical Hours

	2Q/97	3Q/97	4Q/97	1Q/98	2Q/98	3Q/98	4Q/98	Prev. Qtr
# of Power Changes in previous qtr	1	0	0	1	2	2	1	3
Total Power Changes in previous 4 qtrs	1	1	1	2	3	5	6	8
# of Hrs Critical in qrtr	1500	1000	2160	2136	2160	2136	2136	1751
Total Hrs Critical in previous 4 qtrs				6796	7456	8592	8568	8183
					2Q/98	3Q/98	4Q/98	Prev. Q
Indicator value					2.8	4.1	4.9	6.8

Thresholds	
Green	≤6.0
White	>6.0
Yellow	N/A
Red	N/A

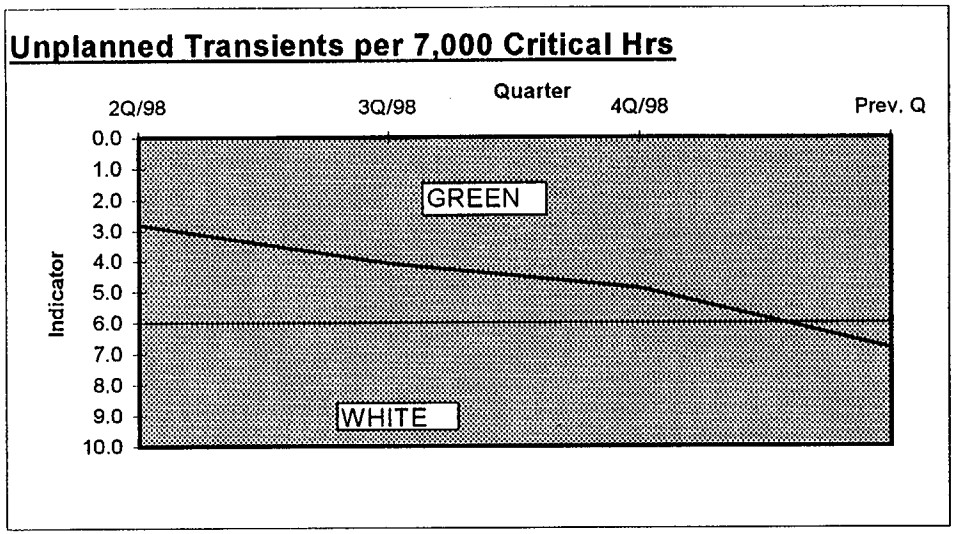

2.2 MITIGATING SYSTEMS CORNERSTONE

This section defines the performance indicators used to monitor the performance of key selected systems that are designed to mitigate the effects of initiating events, and describes their calculational methods.

The definitions and guidance contained in this section, while similar to guidance developed in support of INPO/WANO indicators and the Maintenance Rule, are unique to the regulatory oversight program. Differences in definitions and guidance in most instances are deliberate and are necessary to meet the unique requirements of the regulatory oversight program.

While safety systems are generally thought of as those that are designed to mitigate design basis accidents, not all mitigating systems have the same risk importance. PRAs have shown that risk is often influenced not only by front-line mitigating systems, but also by support systems and equipment. Such systems and equipment, both safety- and non-safety related, have been considered in selecting the performance indicators for this cornerstone. Not all aspects of licensee performance can be monitored by performance indicators, and risk-informed baseline inspections are used to supplement these indicators.

SAFETY SYSTEM UNAVAILABILITY

Purpose

The purpose of the safety system unavailability indicator is to monitor the readiness of important safety systems to perform their safety functions in response to off-normal events or accidents.

Indicator Definition

The average of the individual train unavailabilities in the system. Train unavailability is the ratio of the hours the train is unavailable to the number of hours the train is required to be able to perform its intended safety function.

The performance indicator is calculated separately for each of the following four systems for each reactor type.

BWRs

- high pressure injection systems -- (high pressure coolant injection, high pressure core spray, feedwater coolant injection)
- heat removal systems - (reactor core isolation cooling)
- residual heat removal system
- emergency AC power system

PWRs

- high pressure safety injection system
- auxiliary feedwater system
- emergency AC power system
- residual heat removal system

Data Reporting Elements

The following elements are reported for each train for the previous quarter:

- planned unavailable hours,
- unplanned unavailable hours,
- fault exposure unavailable hours, and
- hours the train was required to be available for service.
- number of trains in the system

Sources for identifying unavailable hours can be obtained from system failure records, control room logs, event reports, maintenance work orders, etc. Preventive maintenance and surveillance test procedures may be helpful in determining if activities performed using these procedures cause systems or trains to be unavailable. These procedures may also assist in identifying the frequency of such maintenance and test activities.

Calculation

The system unavailability is determined for each reporting quarter as follows:

Train unavailability during previous 12 quarters:

$$\frac{\text{(planned unavailable hrs)} + \text{(unplanned unavailable hrs)} + \text{(fault exposure unavailable hrs)}}{\text{(hours train required during the previous 12 quarters)}}$$

System unavailability is the sum of the train unavailabilities divided by the number of system trains.

The indicator for each of the monitored systems is the average system unavailability over the previous 12 quarters.

For some multi-unit stations the calculation for the emergency diesel generator value could be affected by a "swing" emergency diesel generator for either unit or other units. (See Emergency AC Power section for further details.)

Definition of Terms

Planned unavailable hours: These hours include time the train was out of service for maintenance, testing, equipment modification, or any other time equipment is electively removed from service and the activity is planned in advance.

Unplanned unavailable hours: These hours include corrective maintenance time or elapsed time between the discovery and the restoration to service of an equipment failure or human error that makes the train unavailable (such as a misalignment).

Fault exposure unavailable hours: These ~~are estimated~~ hours that a train was in an undetected, failed condition. (This item is explained in more detail in the Clarifying Notes.)

Hours required are the number of hours a monitored safety system is required to be available to satisfactorily perform its intended safety function.

A train consists of a group of components that together provide the monitored functions of the system and as explained in the enclosures for specific reactor types. Fulfilling the design basis of the system may require one or more trains of a system to operate simultaneously. The number of trains in a system is determined as follows:

- for systems that primarily pump fluids, the number of trains is equal to the number of parallel pumps or the number of flow paths in the flow system (e.g., number of auxiliary feedwater pumps). The preferred method is to use the number of pumps. For a system that contains an installed spare pump, the number of trains would equal the number of flow paths in the system.

- for systems that provide cooling of fluids, the number of trains is determined by the number of parallel heat exchangers, or the number of parallel pumps, whichever is fewer.

- emergency AC power system: the number of class 1E emergency (diesel, gas turbine, or hydroelectric) generators at the station that are installed to power shutdown loads in the event of a loss of off-site power -- This includes the diesel generator dedicated to the BWR HPCS system.

Off normal events or accidents: These are events specified in a plant's design and licensing bases. Typically these events are specified in a plant's safety analysis report, however other events/analysis should be considered (e.g. Appendix R analysis).

Note: Additional guidance for specific systems is provided later in this section.

Clarifying Notes

The systems have been selected for this indicator based on their importance in preventing reactor core damage or extended plant outage. The selected systems include the principal systems needed for maintaining reactor coolant inventory following a loss of coolant, for decay heat removal following a reactor trip or loss of main feedwater, and for providing emergency AC power following a loss of plant off-site power.

Except as specifically stated in the indicator definition and reporting guidance, no attempt is made to monitor or give credit in the indicator results for the presence of other systems at a given plant that add diversity to the mitigation or prevention of accidents. For example, no credit is given for additional power sources that add to the reliability of the electrical grid supplying a plant because the purpose of the indicator is to monitor the effectiveness of the plant's response once the grid is lost.

Some components in a system may be common to more than one train, in which case the effect of the performance (unavailable hours) of a common component is included in all affected trains.

Unavailable hours for a multi-function system should be counted only during those times when any function monitored by this indicator is required to be available.

Trains are generally considered to be available during periodic system or equipment realignments to swap components or flow paths as part of normal operations.

It is possible for a train to be considered operable yet unavailable per the guidance in this section. The purpose of this indicator is to monitor the readiness of important safety systems to perform their safety function in response to off-normal events or accidents.

Planned Unavailable Hours

Planned unavailable hours are hours that a train is not available for service for an activity that is planned in advance. The beginning and ending times of planned unavailable hours are known.[4] Causes of planned unavailable hours include, but are not limited to, the following:

- preventive maintenance, corrective maintenance on non-failed trains, or inspection requiring a train to be mechanically and/or electrically removed from service

- planned support system unavailability causing a train of a monitored system to be unavailable (e.g., AC or DC power, instrument air, service water, component cooling water, or room cooling)

- testing, unless the test configuration is automatically overridden by a valid starting signal, or the function can be promptly restored either by an operator in the control room or by a dedicated operator[5] stationed locally for that purpose. Restoration actions must be

[4]Accumulation of unavailable hours ends when the train is returned to a normal standby alignment. However, if a subsequent test (e.g., post-maintenance test) shows the train not to be capable of performing its safety function, the time between the return to normal standby alignment and the unsuccessful test is reclassified as unavailable hours.

contained in a written procedure, must be uncomplicated (*a single action or a few simple actions*), and must not require diagnosis or repair. Credit for a dedicated local operator can be taken only if (s)he is positioned at the proper location throughout the duration of the test for the purpose of restoration of the train should a valid demand occur. The intent of this paragraph is to allow licensees to take credit for restoration actions that are virtually certain to be successful (i.e., probability nearly equal to 1) during accident conditions.

The individual performing the restoration function can be the person conducting the test and must be in communication with the control room. Credit can also be taken for an operator in the main control room provided s(he) is in close proximity to restore the equipment when needed. Normal staffing for the test may satisfy the requirement for a dedicated operator, depending on work assignments. In all cases, the staffing must be considered in advance and an operator identified to take the appropriate prompt response for the testing configuration independent of other control room actions that may be required.

Under stressful chaotic conditions otherwise simple multiple actions may not be accomplished with the virtual certainty called for by the guidance (e.g., lift test leads and land wires; or clearing tags). In addition, some manual operations of systems designed to operate automatically, such as manually controlling HPCI turbine to establish and control injection flow are not virtually certain to be successful.

- any modification that requires the train to be mechanically and/or electrically removed from service.

If a maintenance activity goes beyond the originally scheduled time frame, the additional hours can be considered planned unavailable hours except when due to detection of a new failed component that would prevent the train from performing its intended safety function.

Planned unavailable hours are included because portions of a system are unavailable during these planned activities when the system should be available to perform its intended safety function.

Note: It is recognized that such planned activities can have a net beneficial effect in terms of reducing unplanned unavailability and fault exposure unavailable hours (as discussed further below). If planned activities are well managed and effective, fault exposure unavailable hours and unplanned unavailable hours are minimized.

Treatment of Planned Overhaul Maintenance

Plants that perform on-line planned overhaul maintenance (i.e., within approved Technical Specification Allowed Outage Time) do not have to include planned overhaul hours in the unavailable hours for this performance indicator under the conditions noted below. ~~Non-overhaul~~

[5] Operator in this circumstance refers to any plant personnel qualified and designated to perform the restoration function.

~~planned maintenance hours and all unplanned maintenance hours would be reported as part of this indicator. This exception provides equity in data reporting by acknowledging that plants that do not have a sufficient Allowed Outage Time to perform overhaul maintenance on-line do not report maintenance and overhaul hours performed off-line.~~ Overhaul maintenance comprises those activities that are undertaken voluntarily and performed in accordance with an established preventive maintenance program to improve equipment reliability and availability. Overhauls include disassembly and reassembly of major components and may include replacement of parts as necessary, cleaning, adjustment, and lubrication as necessary. Typical major components are: diesel engine or generator, pumps, pump motor or turbine driver, or heat exchangers.

Any AOT sufficient to accommodate the overhaul hours may be considered. However, to qualify for the exemption of unavailable hours, licensees must have in place a quantitative risk assessment. This assessment must demonstrate that the planned configuration meets either the requirements for a risk-informed TS change described in Regulatory Guide 1.177, or the requirements for normal work controls described in NUMARC 93-01, Section 11.3.7.2. Otherwise the unavailable hours must be counted. The Safety System Unavailability indicator excludes maintenance-out-of-service hours on a train that is not required to be operable per technical specifications (TS). This normally occurs during reactor shutdowns. Online maintenance hours for systems that do not have installed spare trains would normally be included in the indicator. However, some licensees have been granted extensions of certain TS allowed outage times (AOTs) to perform online maintenance activities that have, in the past, been performed while shut down.

The criteria of Regulatory Guide 1.177 include demonstration that the change has only a small quantitative impact on plant risk (less than 5x10-7 incremental conditional core damage probability). It is appropriate and equitable, for licensees who have demonstrated that the increased risk to the plant is small, to exclude unavailable hours for those activities for which the extended AOTs were granted. However, in keeping with the NRC's increased emphasis on risk-informed regulation, it is not appropriate to exclude unavailable hours for licensees who have not demonstrated that the increase in risk is small. In addition, 10 CFR 50.65(a)(4), requires licensees to assess and manage the increase in risk that may result from proposed maintenance activities. Guidance on a quantitative approach to assess the risk impact of maintenance activities is contained in the latest revision of Section 11.3.7.2 of NUMARC 93-01. That section allows the use of normal work controls for plant configurations in which the incremental core damage probability is less than 10^{-6}. Licensees must demonstrate that their proposed action complies with either the requirements for a risk-informed TS change or the requirements for normal work controls described in NUMARC 93-01.

The planned overhaul maintenance may be applied once per train per operating cycle. The work may be done in two segments provided that the total time to perform the overhaul does not exceed one AOT period.

If additional time is needed to repair equipment problems discovered during the planned overhaul that would prevent the fulfillment of a safety function, the additional hours would be non-overhaul hours and/or potential fault exposure hours, and would count toward the indicator.

Other activities may be performed with the planned overhaul activity as long as the outage duration is bounded by overhaul activities. If the overhaul activities are complete, and the outage

continues due to non-overhaul activities, the additional hours would be non-overhaul hours and would count toward the indicator.

Major rebuild tasks necessitated by an unexpected component failure that would prevent the fulfillment of a safety function cannot be counted as overhaul maintenance.

This overhaul exemption does not normally apply to support systems except under unique plant-specific situations on a case-by-case basis. The circumstances of each situation are different and should be identified to the NRC so that a determination can be made. Factors to be taken into consideration for an exemption for support systems include (a) the results of a quantitative risk assessment, (b) the expected improvement in plant performance as a result of the overhaul activity, and (c) the net change in risk as a result of the overhaul activity.

Unplanned Unavailable Hours

Unplanned unavailable hours are the hours that a train is not available for service for an activity that was not planned in advance. The beginning and ending times of unplanned unavailable hours are known. Causes of unplanned unavailable hours include, but are not limited to, the following:

- corrective maintenance time following detection of a failed component that prevented the train from performing its intended safety function. (The time between failure and detection is counted as fault exposure unavailable hours, as discussed below.)

- unplanned support system unavailability causing a train of a monitored system to be unavailable (e.g., AC or DC power, instrument air, service water, component cooling water, or room cooling)

- human errors leading to train unavailability (e.g., valve or breaker mispositioning-- only the time to restore would be reported as unplanned unavailable hours-- the time between the mispositioning and discovery would be counted as fault exposure unavailable hours as discussed below)

Fault Exposure Unavailable Hours

~~The concept of f~~Fault exposure unavailable hours ~~reflects an estimate of the amount of~~ are the time that a train spends in an undetected, failed condition. Three situations involving fault exposure unavailable hours can occur.

1. The failure's time of occurrence and its time of discovery are known. Examples of this type of failure include events external to the equipment (e.g., a lightning strike, some mispositioning by operators, or damage caused during test or maintenance activities) that caused the train failure at a known time. For these cases, the fault exposure unavailable hours are the lapsed time between the occurrence of a failure and its time of discovery.

   For instances where the time of occurrence is determined to have occurred more than three years ago (12 quarters) faulted hours are only computed back for a maximum of 12 quarters.

   For design deficiencies that occurred in a previous reporting period, fault exposure hours are

not reported. However, unplanned unavailable hours are counted from the time of discovery. The indicator report is annotated to identify the presence of an old design error, and the inspection process will assess the significance of the deficiency.

The absence or inadequacy of a periodic inspection or test of a train monitored by this indicator that results in a long-standing unavailability of that train is considered, for purposes of this indicator, to be an old design issue that is not counted in the indicator.

2. Only the time of the failure's discovery is known with certainty. The intent of the use of the term "with certainty" is to ensure that an appropriate analysis and review to determine the time of failure is completed, documented in the corrective action program, and reviewed by management. The use of component failure analysis, circuit analysis, or event investigations are acceptable. Engineering judgment may be used in conjunction with analytical techniques to determine the time of failure. It is improper to assume that the failure occurred at the time of discovery for these failures because the assumption ignores what could be significant unavailable time prior to their discovery. Fault exposure unavailable hours for this case must be estimated. The value used to estimate the fault exposure unavailable hours for this case is: one half the time since the last successful test or operation that proved the system was capable of performing its safety function. However, the time reported is never greater than three years (12 quarters). For example, if the last successful surveillance test was 24 months ago, then the time reported would be 8760 hours (12 months). If the time since the last test was 74 months, the time reported would be 26,280 hours (36 months).

   The unavailable hours can be amended in a future report if further analysis identifies the time of failure or determines that the affected train would have been capable of performing its safety function during the worst case event for which the train is required.

   If a failure is identified when a train is not required to be available, fault exposure hours are estimated by counting from the date of the failure back to one-half the time since the last successful operation and including only those hours during that period when the train was required to be available.

   Note: For design deficiencies, faulted hours are not counted. However, unplanned hours are counted from the time of discovery. In these cases, the quarterly indicator report is annotated to identify the presence of a~~n~~ ~~ancient~~ design error, and the inspection process will assess the significance of the deficiency.

3. The failure is annunciated when it occurs. For this case, there are no fault exposure unavailable hours because the time of failure is the time of discovery. These failures include the following:

   - failure of a continuously operated component, such as the trip of an operating feedwater pump that is also used to fulfill a monitored system function, such as feedwater coolant injection in some BWRs,

   - failure of a component while in standby that is annunciated in the control room, such as failure of control power circuitry for a monitored system,

When a failed or mispositioned component that results in the loss of train function is discovered during an inspection or by incidental observation (without being tested), fault exposure unavailable hours are still reported.

~~Malfunctions or operating errors that do not prevent a train from being restored to normal operation within 10 minutes, from the control room, and that do not require corrective maintenance, or a significant problem diagnosis, are not counted as failures.~~

Operator actions to recover from an equipment malfunction or an operating error can be credited if the function can be promptly restored from the control room by a qualified operator taking an uncomplicated action (a single action or a few simple actions) without diagnosis or repair (i.e., the restoration actions are virtually certain to be successful during accident conditions). Note that under stressful, chaotic conditions, otherwise simple multiple actions may not be accomplished with the virtual certainty called for by the guidance (e.g., lift test leads and land wires). In addition, some manual operations of systems designed to operate automatically, such as manually controlling HPCI turbine to establish and control injection flow, are not virtually certain to be successful.

Small oil, water or steam leaks that would not preclude safe operation of the component during an operational demand and would not prevent a train from satisfying its safety function are not counted.

A train is available if it is capable of performing its safety function. For example, if a normally open valve is found failed in the open position, and this is the position required for the train to perform its function, fault exposure unavailable hours would not be counted for the time the valve was in a failed state. However, unplanned unavailable hours would be counted for the repair of the valve, if the repair required the valve to be closed or the line containing the valve to be isolated, and this degraded the full capacity or redundancy of the system.

Fault exposure unavailable hours are not counted for a failure to meet design or technical specifications, if engineering analysis determines the train was capable of performing its safety function during an operational event. For example, if an emergency generator fails to reach rated speed and voltage in the precise time required by technical specifications, the generator is not considered unavailable if the test demonstrated that it would start, load, and run as required in an emergency.

Reporting Fault Exposure Time

The fault exposure unavailable hours associated with a component failure may include unavailable hours covering several reporting periods (e.g., several quarters). The fault exposure unavailable hours should be assigned to the appropriate reporting periods. For example, if a failure is discovered on the 10th day of a quarter and the estimated number of unavailable hours is 300 hours, then 240 hours should be counted for the current quarter and 60 unavailable hours should be counted for the previous quarter. Note: This will require an update of the previous quarter's data. Remove the double count by removing the planned and unplanned hours which overlap with the fault exposure hours. Put an explanation in the comment field. If you later remove the fault exposure hours, restore the hours which had been removed.

Removing (Resetting) Fault Exposure Hours

Fault exposure hours associated with a single item may be removed after 4 quarters have elapsed from discovery, provided the following criteria are met:

1. The fault exposure hours associated with the item are greater than or equal to 336 hours and the green-white threshold has been exceeded.
2. Corrective actions associated with the item to preclude recurrence of the condition have been completed by the licensee, and
3. Supplemental inspection activities by the NRC have been completed and any resulting open items related to the condition causing the fault exposure have been closed out in an inspection report.

Fault exposure hours are removed by submitting a change report that provides a revision to the reported hours for the affected quarter(s). The change report should include a comment to document this action.

Hours Train Required

The term "hours train required" is associated with the hours a train is required to be available to satisfactorily perform its safety function~~, if required~~. Unavailable hours are counted only for periods when a train is required to be available for service.

The default values identified below are typical; however, differences may exist in the number of trains required during different modes of operation. The calculational methodology accommodates differences in required train hours in these cases. The default value in the denominator can be used to simplify data collection. However, the numerator must include all unavailable hours during periods that the train is required regardless of the default value.

- Emergency AC power system. This value is estimated by the number of hours in the reporting period, because emergency generators are normally expected to be available for service during both plant operation and shutdown.

- Residual Heat Removal System. This value is estimated by the number of hours in the reporting period, because the residual heat removal system is required to be available for decay heat removal at all times.

- All other systems. This value is estimated by the number of critical hours during the reporting period, because these systems are usually required to be in service only while the reactor is critical, and for short periods during startup or shutdown. In some cases this value is already provided as part of the calculation, as in unplanned automatic scrams per 7,000 hours critical data.

Component Failures

Unavailable hours (planned, unplanned, and fault exposure) are not reported for the failure of certain ancillary components unless the safety function of a principal component (e.g., pump, valve, emergency generator) is affected in a manner that prevents the train from performing its

intended safety function. Such ancillary components include equipment associated with control, protection, and actuation functions; power supplies; lubricating subsystems; etc. For example, if there are three pressure switches arranged in a two-out-of-three logic provide low suction pressure protection for a PWR auxiliary feedwater pump, and one becomes defective, unavailable hours would not be counted because the single failure would not affect operability of the pump.

Installed Spares and Redundant Maintenance Trains

Some power plants have safety systems with extra trains ~~of components~~ to allow preventive maintenance to be carried out with the unit at power without violating the single failure criterion (when applied to the remaining trains). That is, one of the remaining trains may fail, but the system can still achieve its safety function as required by the design basis safety analysis. Such systems are characterized by a large number of trains (usually a minimum of four, but often more). To be a maintenance train, a train must not be required in the design basis safety analysis for the system to perform its safety function.

An "installed spare" is a component (or set of components) that is used as a replacement for other equipment to allow for the removal of equipment from service for preventive or corrective maintenance without violating the single failure criterion. To be an "installed spare," a component must not be required in the design basis safety analysis for the system to perform its safety function.

The following examples will help illustrate the system requirements in order to benefit from this provision:

- A system containing three 50% (flow rate and/or cooling capacity) trains would not meet the requirement since full design flow rate would not be available with one train in maintenance and one train failed (single failure criterion).

- A system with four 50% trains or three 100% trains may meet the criterion, assuming the system design flow rate and cooling requirements can be met during a design basis accident anywhere within the reactor coolant or secondary system boundaries, including unfavorable locations of LOCAs and feedwater line breaks. This statement is not intended to set new design criteria, but rather, to define the level of system redundancy required if reporting of unavailable hours on a redundant train is to be avoided.

Unavailable hours for an installed spare are counted only if the installed spare becomes unavailable while serving as replacement for another component. This includes planned and unplanned unavailable hours, and fault exposure unavailable hours. The appropriate way to estimate fault exposure hours is to count from the date of failure back to one half the time since the last successful operation and include only those hours during that period when the equipment was required to be available.

Planned unavailable hours (e.g., preventive maintenance) and unplanned unavailable hours (e.g., corrective maintenance) are not counted for a component when that component has been replaced by an installed spare.

In some designs, specific systems have a complete spare train, allowing the total replacement of one train for on-line maintenance, or increased system availability. Systems that have such extra trains generally must meet design bases requirements with one train in maintenance and a single failure of another train.

Trains that are required as backup in case of equipment failure to allow the system to meet redundancy requirements or the single failure criterion (e.g., swing components that automatically align to different trains or units) are not installed spares.

Fault exposure unavailable hours associated with failures are counted, even if the failed train/component is replaced by an installed spare while it is being repaired. For example: a pump in a high pressure safety injection system (that has an installed spare pump) fails its quarterly surveillance test. Unavailable hours reported for this failure would include the time needed to substitute the installed spare pump for the failed pump (unplanned unavailable hours), plus half the time since the last successful surveillance that demonstrated the train/system was capable of performing its safety function, or 36 months whichever is the shortest period.

In systems where there are installed spare components or trains, unavailable hours for the spare component or train are only counted against the replaced component or train. For example, if a system has an installed spare train that is valved into the system, any unavailable hours are counted against the replaced train, not the spare train. Thus, in a three train system that has one installed spare train, the number of trains in the safety system unavailability equation is two. The system unavailability is the sum of the unavailable hours divided by two.

Systems Required to be in Service at All Times

The Emergency AC power system and the residual heat removal RHR system are normally required to be in service at all times. However, planned and unplanned unavailable hours are not reported under certain conditions. The specific conditions for the emergency diesel generator are described in the Emergency Diesel Generator Section. For RHR systems, when the reactor is shutdown with fuel in the vessel, those systems or portions of systems that provide shutdown cooling can be removed from service without incurring planned or unplanned unavailable hours under the following conditions~~are as follows~~:

—RHR trains may be removed from service provided an NRC approved alternate method of decay heat removal is verified to be available for each RHR train removed from service. The intent is that at all times there will be two methods of decay heat removal available, at least one of which is a forced means of heat removal. ~~When the reactor is shutdown, those systems or portions of systems that provide shutdown cooling can be removed from service without incurring planned or unplanned unavailable hours under the following conditions:~~

- ~~* Those portions of the shutdown cooling system associated with one heat exchanger flow path can be taken out of service without incurring planned or unplanned unavailable hours provided the other heat exchanger flow path is available (including at least one pump) and an alternate, NRC approved means of removing core decay heat is available. The alternate means of decay heat removal need not be safety related, but must have been determined to be capable of handling the decay heat load.~~

- When the reactor is defueled or ~~With fuel still in the vessel, when~~ the decay heat load is so low that forced recirculation for cooling purposes, even on an intermittent basis, is no longer required (ambient losses are enough to offset the decay heat load), any train providing shutdown cooling may be removed from service without incurring planned or unplanned unavailable hours.

- ~~When the reactor is defueled, any trains providing shutdown cooling may be removed from service without incurring planned or unplanned unavailable hours~~.

- When the bulk reactor coolant temperature is less than 200 F, those trains or portions of trains whose sole function is to provide suppression pool cooling (BWR) may be removed from service without incurring planned or unplanned unavailable hours.

- When portions of a single train provide both the shutdown cooling and the suppression pool cooling function, the most limiting set of reportability requirements should be used (i.e. unavailable hours and required hours are reported whenever at least one function is required.)

Fault exposure unavailable hours are always counted, even when portions of the system are removed from service as described above.

When the plant is operating, selected components that help provide the shutdown cooling function of the RHR system are normally de-energized or racked out. This does not constitute an unavailable condition for the trains that provide shutdown cooling, unless the de-energized components cannot be placed back into service before the minimum time that the shutdown cooling function would be needed (typically the time required for a plant to complete a rapid cooldown, within maximum established plant cooldown limits, from normal operating conditions).

Support System Unavailability

If the unavailability of a support system causes a train to be unavailable, then the hours the support system was unavailable are counted against the train as ~~either~~ planned, ~~or~~ unplanned, or fault exposure -unavailable hours. Support systems are defined as any system required for the safety system to remain available for service. (The technical specification criteria for determining operability may not apply when determining train unavailability. In these cases, analysis or sound engineering judgment may be used to determine the effect of support system unavailability on the monitored system.)

If the unavailability of a single support system causes a train in more than one of the monitored systems to be unavailable, the hours the support system was unavailable are counted against the affected train in each system. For example, a train outage of 3 hours in a PWR service water system caused the emergency generator, the RHR heat exchanger, the HPSI pump, and the AFW pump associated with that train to be unavailable also. In this case, 3 hours of unavailability would be reported for the associated train in each of the four systems.

If a support system is dedicated to a system and is normally in standby status, it should be included as part of the monitored system scope. In those cases, fault exposure unavailable hours

caused by a failure in the standby support system that results in a loss of a train function should be reported because of the effect on the monitored system. By contrast, failures of continuously-operating support systems do not contribute to fault exposure unavailable hours in the monitored systems they support.

Unavailable hours are also reported for the unavailability of support systems that maintain required environmental conditions in rooms in which monitored safety system components are located, if the absence of those conditions is determined to have rendered a train unavailable for service at a time it was required to be available.

In some instances, unavailability of a monitored system that is caused by unavailability of a support system used for cooling need not be reported if cooling water from another source can be substituted. Limitations on the source of the cooling water are as follows:

- for monitored fluid systems with components cooled by a support system, where both the monitored and the support system pumps are powered by a class lE (i.e., safety grade or an equivalent) electric power source, cooling water supplied by a pump powered by a normal (non class lE--i.e., non-safety grade) electric power source may be substituted for cooling water supplied by a class lE electric power source, provided that redundancy requirements to accommodate single failure criteria for electric power and cooling water are met. Specifically, unavailable hours must be reported when both trains of a monitored system are being cooled by water provided by a single cooling water pump or by cooling water pumps powered by a single class lE power (safety grade) source.

- for emergency generators, cooling water provided by a pump powered by another class lE (safety grade) power source can be substituted, provided a pump is available that will maintain electrical redundancy requirements such that a single failure cannot cause a loss of both emergency generators.

Emergency AC power is not considered to be a support system. Unavailability of a train because of loss of AC power is counted when both the normal AC power supply and the emergency AC power supply are not available.

~~Frequently Asked Questions~~

~~1D Question~~

~~1.1 How do you report Fault Exposure unavailability hours when ongoing failure analysis or root cause analysis may identify a specific time of occurrence for the failure? Do you report the unavailability time and fault exposure hours immediately upon discovery or can you report unavailability immediately and defer reporting potential fault exposure hours until completion of the failure analysis.~~

~~Response~~

~~If the time of failure is not known with certainty, then the fault exposure hours should be reported as one half the time since the last successful test or operation that proved the system was capable of performing its safety function. The unavailability hours can be amended in a future report if further analysis identifies the time of failure or determines that the affected train would have been capable of performing its safety function during an operational event.~~

~~ID~~ ~~Question~~

~~12~~ ~~Was it intended or anticipated when developing the guidance that SSCs could be considered operable, yet unavailable? Our plant has performed an Operability Determination that justifies maintaining the SI system operable when an SI flow transmitter is out of service for calibration (Restoration is uncomplicated and can be completed well before the transmitter function is needed). However, under NEI 99-02 guidance the out of service time would be counted under planned unavailability.~~

~~Response~~

~~It is possible for an SSC to be considered operable yet unavailable per guidance in NEI 99-02. The purpose of the safety system unavailability indicator is to monitor the readiness of important safety systems to perform their safety functions in response to off normal events or accidents. System unavailability due to testing is included in this indicator except when the testing configuration is automatically overridden or the function can be immediately restored. NEI 99-02 provides further guidance. The specifics of your situation should be assessed against this guidance to determine if the calibration time is counted.~~

~~ID~~ ~~Question~~

~~13~~ ~~Is it intended that the operator used in the definition of planned unavailability be a licensed operator or can the restoration actions be accomplished by other qualified plant personnel (e.g., I&C technician)~~

~~Response~~

~~Qualified plant personnel, provided there is a means of communication with the Control Room, can perform the restoration actions.~~

~~ID~~ ~~Question~~

~~14~~ ~~In the guidance for planned unavailable hours it says that restoration actions must be contained in a written procedure, must be uncomplicated (a single action or a few simple actions) and must not require diagnosis or repair. Is it acceptable to have a procedure action call for restoration of the transmitter if directed by the control room (when normal transmitter restoration is a skill of craft evolution), or would detailed procedure steps be required (i.e., lift test leads, land wire, etc.). Also, is it intended that for an activity to be uncomplicated, it must involve a single action, or is the definition of uncomplicated dependent on the specific circumstances (e.g., the amount of time available for restoration, the difficulty of the actions regardless of number, etc.).~~

~~Response~~

~~As stated in the guideline, credit is allowed for restoration actions that are virtually certain to be successful (i.e., probability nearly equal to 1) during accident conditions. Under stressful, chaotic conditions, otherwise simple, multiple actions may not be accomplished with the virtual certainty called for by the guidance (e.g., lift test leads, land wires).~~

~~ID~~ ~~Question~~

~~15~~ ~~The Safety System Unavailability Performance Indicator requests data be provided for the following functions: 1) high pressure injection systems, 2) heat removal systems, 3) residual heat removal systems, and 4) emergency AC power systems. The monitored functions for the RHR system are: Removal of heat from the suppression, and Removal of decay heat from the reactor core during a normal unit shutdown (e.g., for refueling or servicing). Our plant does not have an RHR system. The~~

~~identified functions are performed by the Low-Pressure Coolant Injection/Containment Cooling Service Water system and the Shutdown Cooling system. What should be reported for this indicator?~~

~~**Response**~~

~~It is acknowledged that unique plant configurations can affect performance indicator reporting. The circumstances of each occurrence should be identified as early as possible to the NRC so that a determination can be made as to whether alternate data reporting can be used in place of the data called for in the guidance.~~

~~ID~~	~~Question~~
~~17~~	~~Can both RHR Shutdown Cooling subsystems be removed from service without incurring Planned or Unplanned Unavailable Hours provided an alternate method of decay heat removal is verified to be available for each RHR Shutdown Cooling subsystem required to be Operable for the Mitigating Systems / Safety Systems Performance Indicator?~~

~~**Response**~~

~~Approved alternate methods for decay heat removal during shutdown cooling may be considered Installed Spares provided the components are not required in the design basis safety analysis for the system to perform its safety function. NEI 99-02 provides additional guidance on Installed Spares and Redundant Maintenance Trains. Unavailability hours for installed spares are to be counted if the installed spare becomes unavailable while serving as a replacement and the hours the installed spare is relied upon will also be included in the calculation's required hours.~~

~~ID~~	~~Question~~
~~18~~	~~The Nuclear Service Water (NSW) assured suction supply to Auxiliary Feedwater (AFW) was recently determined to be sufficiently occluded with MIC build up to be unable to fulfill its function under certain accident scenarios. During a postulated seismic event concurrent with a loss of offsite power (LOOP), the normal seismic condensate suction sources would be assumed to be unavailable. Because of the pressure drop associated with the MIC occlusion, it would be possible to induce a negative pressure at the AFW suction, potentially drawing air into the suction from the postulated secondary side line break. The MIC build up has since been cleared, and flow testing of the NSW supply is now performed. The NSW piping had not been flow tested as part of the plant's GL 89-13 program until after discovery of this condition, so the fault exposure time of this condition is indeterminate. Under the NEI 99-02 guidelines, how should the fault exposure hours for this condition be addressed?~~

~~**Response**~~

~~First, an assessment needs to be performed to determine the impact of the MIC build up on capability of the AFW system to perform its safety functions under all design basis conditions. If the MIC buildup is severe enough to prevent fulfillment of the AFW safety function under design basis accident conditions, then the following guidance would apply. The absence of periodic inspection or testing of portions of a system that is relied upon during design basis accident conditions, would be considered a design deficiency. For design deficiencies that occurred in a previous reporting period, fault exposure hours are not reported. However, unplanned unavailable hours are counted from the time of discovery. The indicator report is annotated to identify the presence of the design deficiency, and the inspection process will assess the significance of the deficiency.~~

~~ID~~	~~Question~~
~~19~~	~~If a maintenance activity goes beyond the originally scheduled time frame due to delays in work or additional work items are found during the course of a planned system maintenance outage, are the~~

~~additional unavailable hours considered planned?~~

~~**Response**~~
~~Yes, unless you detect a new failed component that prevented the train from performing its intended safety function.~~

~~**ID**~~ ~~**Question**~~
~~20~~ ~~Do you have to count unavailability time for when test return lines used for surveillance testing are out of service? NEI 99-02 states, This capability is monitored for the injection and recirculation phases of the high pressure system response to an accident condition. Does the term "recirculation" refer to the HPCI system taking water from its suppression pool suction, injecting that water into the vessel, and having that water leak from the vessel through the break back to the suppression pool (as opposed to taking the water from the CST and injecting it)? Or is it intended to refer to the system alignment where the test return valve is open and HPCI is taking water from the CST or suppression pool and putting the water back to the CST or suppression pool without injecting it into the vessel?~~
~~**Response**~~
~~The test return line is not required for availability of the HPCI/RCIC system. The test return line can be out of service without counting HPCI/RCIC as unavailable. The term "recirculation" in this context refers to the recirculation of the water from the suppression pool, into the vessel through the injection line, and back to the suppression pool through the leak.~~

~~**ID**~~ ~~**Question**~~
~~21~~ ~~If a lead run failure occurs during the time that the EDG is not required to be operable by Tech Specs, is this counted as fault exposure if corrective measures are implemented prior to conditions requiring that same EDG to be made operable? This happens in shutdown conditions whereby one EDG at a time could be electively removed from service.~~

~~**Response**~~
~~Fault exposure hours do not need to be counted when an EDG is not required to be operable. When a failure occurs on equipment that is not required to be operable, if the most recent successful test and recovery/correction of the failure are all made inside the window where the equipment is not required available, no faulted hours are recorded. If the most recent successful test occurred when the EDG was required to be operable and discovery/correction of the failure are made during a period when the EDG is not required to be operable, faulted hours are recorded on equipment for that portion of the time that the EDG was required to be operable. No fault exposure hours are recorded for times when the EDG is not required.~~

~~**ID**~~ ~~**Question**~~
~~70~~ ~~Planned Activities~~
~~Is there guidance as to how many hours in advance the activities must be planned to be considered "Planned Unavailable hours"? If not, do we establish our own time limit?~~

~~**Response**~~
~~The footnote was removed because it did not apply to this indicator. The guidance for this indicator defines "planned unavailable hours" and "unplanned unavailable hours." The intent is that if equipment is "electively" removed from service it is considered planned maintenance, independent of the number of hours it was planned ahead.~~

~~ID~~ ~~Question~~

~~71~~ ~~RHR Unavailable Hours~~

~~In regards to the NRC PWR Residual Heat Removal (RHR) Performance Indicator, at our plant the Low Pressure Safety Injection (LPSI) pumps do not contribute to the post accident recirculation function (they receive an auto shutdown signal on a Recirculation signal). Given that, if a LPSI pump or header is taken OOS for maintenance while the unit is at power, should unavailable hours be counted against the train since its only function (normal S/D cooling) is not needed in this mode and there is an extended period of time before the plant would be in condition to begin normal S/D cooling?~~

~~Response~~

~~If your tech specs do not require your LPSI pumps while at power, then the hours do not count as unavailable for the PI. Make a best faith effort to provide the data and state your assumptions in the comment field.~~

1

2

~~ID~~ ~~Question~~

~~73~~ ~~Planned Unavailable Hours~~

~~NEI 99-02, Section 2.2, Mitigating Systems Cornerstone, Safety System Unavailability, Clarifying Notes, under Planned Unavailable Hours: There is a discussion of one cause of planned unavailable hours as testing, unless the testing configuration is automatically overridden by a valid starting signal or the function can be promptly restored, either by an operator in the control room or by a dedicated operator stationed locally for that purpose. Restoration actions must be contained in a written procedure, must be uncomplicated (a single action or a few simple actions), and must not require diagnosis or repair. Credit for a dedicated operator can be taken only if (s)he is positioned at the proper location throughout the duration of the test for the purpose of restoration of the train should a valid demand occur. A clarification question is: Can we credit an operator in the main control room if the operator is not positioned directly over the piece of equipment, but is in close vicinity to it and can respond to start the equipment? Another clarification question is: As stated above, restoration actions must be uncomplicated. If a field operator with communication to the Main Control Room is available to restore a piece of equipment that has been tagged Out of Service (OOS), can we credit the action of lifting the OOS as "uncomplicated", or is it to be regarded as more complex since it will involve more than a single action?~~

~~Response~~

~~The answer to the first question is yes. The second question is very situation specific, but most likely the answer would be no, because clearing tags for OOS equipment would be complicated and not meet the restoration criteria.~~

3

~~ID~~ ~~Question~~

~~74~~ ~~Hours Train Required~~

~~NEI 99-02, Section 2.2, Mitigating Systems Cornerstone, Safety System Unavailability, Clarifying Notes, under Hours Train Required: For all other systems (e.g. Aux Feed and HPSI), this value is estimated by the number of critical hours during the reporting period, because these systems are usually required to be in service only while the reactor is critical and for short periods during startup or shutdown. As I read this statement, we are to estimate by counting critical hours and are not required to count time in lower modes, even if that equipment is required to be operable per Tech Specs in the lower modes, correct?~~

~~Response~~

~~The default value in the denominator can be used to simplify data collection. However, the numerator must include all unavailable hours that the train is required, regardless of the default value.~~

1
2

~~ID~~ ~~Question~~

~~86~~ ~~Off-normal events or accidents~~

~~In NEI 99-02, it states, "The purpose of the safety system unavailability indicator is to monitor the readiness of important safety systems to perform their safety functions in response to off-normal events or accidents." NEI 99-02 also states, "Hours required are the number of hours a monitored safety system is required to be available to satisfactorily perform its intended safety function." Does the phrase "perform their safety functions in response to off normal events or accidents" refer only to credited accidents in the UFSAR, or is it intended to include events such as an Appendix R event?~~

~~Response~~

~~Yes. "Off-normal events or accidents" are as specified in your design and licensing bases, therefore, UFSAR and Appendix R events should be considered.~~

3

~~ID~~ ~~Question~~

~~87~~ ~~Unavailability and Fault Exposure Hours~~

~~Should unavailability and fault exposure hours be counted for items that do not affect the automatic start and load of the Emergency Diesel Generators (EDG), but do affect the ability to manually start them?~~

~~Response~~

~~This is a plant specific question which must be answered based on safety function of the manual start feature. Make a best faith effort (which could include discussion with your resident) to determine the answer and document your decision.~~

4

~~ID~~ ~~Question~~

~~88~~ ~~Certainty~~

~~If a failure occurs and the time of discovery is known and the time of failure can be estimated with an appropriate level of investigation, analysis and engineering judgment, should the fault exposure unavailability hours be determined using this information or does "Only the time of the failure's discovery is known with certainty," imply that the time of failure must be known with certainty (and can not be determined through analysis, reviews, or engineering estimates)?~~

~~Response~~

~~The intent of the use of the term "with certainty" is to ensure an appropriate analysis and review is completed to determine the time of failure. The use of component failure analysis, circuit analysis, engineering judgement, or event investigations are acceptable provided these approaches are documented in your corrective action program and reviewed by management.~~

5
6

~~ID~~ ~~Question~~

~~145~~ ~~During refueling outages usually after reload, we conduct 4160 VAC electrical safeguards train bus outages with fuel in the core, but with the Refueling Cavity flooded (greater than 20 feet). As a result, 1 train of RHR cannot be used. Our plant shutdown safety assessment counts the refueling cavity flooded to > 20 feet and the upper internals removed as equivalent to one RHR train. Must we count the 2nd train of RHR as being unavailable when the refueling cavity is flooded?~~

~~Response~~

~~If the PWR method described is an NRC approved alternate method (e.g., alternate method allowed by Technical Specifications) of removing core decay heat, then the RHR unavailability time for the~~

~~first train would not be counted. If the second train is not required by Technical Specifications, then its unavailable hours would not count.~~

~~ID~~ ~~Question~~

~~146~~ ~~In most plants, the RHR system performs the containment heat removal function (ECCS) and the shutdown cooling (SDC) function using common equipment. There are subsets of RHR equipment which are specific to only one of the functions such as the SDC suction valves from the RCS. Technical specifications generally do not require operability of the SDC function during power operation and activities affecting equipment specific only to SDC function are not tracked as LCOs. Should we monitor SDC specific equipment and report unavailability hours for the SDC function during periods when SDC is not required by technical specifications or monitor only what is required by Tech Specs that are mode specific?~~

~~Response~~

~~Reporting of unavailability hours for a multi-function system should be counted only during the time the particular affected function is required by technical specifications. For RHR, unavailability hours for containment heat removal are counted only when containment cooling is required by tech specs and SDC hours are counted only when the SDC function is required by tech specs. The two are added together to derive the total hours of RHR unavailability to be reported. Overlap times when both functions are required can be adjusted to eliminate double counting the same incident.~~

~~ID~~ ~~Question~~

~~147~~ ~~NEI 99-02 states that Planned Unavailable Hours include testing, unless the configuration is automatically overridden by a valid starting signal or the function can be promptly restored, either by an operator in the control room or by a dedicated operator stationed locally for that purpose. If credit is taken for an operator in the control room, must it be a "dedicated" control room operator or can prompt operator actions be conducted by the same operator who would then perform the configuration restoration?~~

~~Response~~

~~Yes, a dedicated operator is required. The intent is that the configuration be restored promptly by an operator independent of other control room operator immediate actions that may also be required. Therefore, an individual must be "dedicated." Normal control room staffing may satisfy this purpose depending on work assignments during the configuration. However, in all cases the staffing consideration must be made in advance and purposely include the dedicated immediate response for the testing configuration.~~

~~ID~~ ~~Question~~

~~148~~ ~~NEI 99-02, section 2.2, under "Systems Required to be in Service at All Times", states with fuel still in the reactor vessel, when decay heat is so low that forced flow for cooling purposes, even on an intermittent basis, is no longer required (ambient losses are enough to offset the decay heat load), component planned or unplanned unavailable hours are not reportable.~~
~~According to our Tech Specs Bases 3.9.7, "...At reactor coolant temperatures < 150°F, natural circulation alone is adequate to provide the required decay heat removal capability while maintaining adequate margin to the reactor coolant temperature (212°F) at which a mode change would occur." However, without stating a given starting temperature the parenthetical clarification may be thermodynamically meaningless. The Tech Spec bases provide that starting temperature, i.e., "less~~

~~than 150°F". Beginning from any initial temperature < 150°F, reactor coolant temperature may initially increase but only to some equilibrium (which will be less than 212°F). After equilibrium, ambient losses will offset decay heat load.~~
~~Therefore, planning a common SDC suction window outage (complete loss of RHR) when ambient heat loss's were enough to offset decay heat (reactor loaded, fuel pool gates open, fuel pool cooling in service to keep temps below 150F) has been a past practice.~~
~~Is this what is meant by the parenthetical condition "ambient losses are enough to offset the decay heat load?"~~

~~**Response**~~
~~No. If the spent fuel pool cooling system is required to maintain reactor coolant temperatures less than 150 degrees F then ambient losses are not sufficient to offset the decay heat load. Therefore, unavailable hours for the RHR system would be counted.~~

~~ID~~	~~Question~~
~~149~~	~~NEI document 99-02 requires monitoring PWR RHR Systems for the following functions:~~

- ~~the ability of the RHR system to take a suction from the containment sump, cool the fluid, and inject at low pressure into the RCS, and~~
- ~~the ability of the RHR system to remove decay heat from the reactor during a normal shutdown for refueling or maintenance.~~

~~On Millstone Unit 3, there is a separate system that performs each of the functions. The shutdown cooling/decay heat removal function is monitored by RHS and post accident recirculation function is monitored by RSS. For Millstone Unit 3 removing RHS (which is required for function 2), during Mode 1 does not affect the ability to meet the post accident recirculation function and therefore does not result in any unavailability for post accident recirculation (function 1). NEI 99-02 states that the required hours for residual heat removal is estimated by number of hours in the reporting period since the residual heat removal system is required to be available at all times. Please clarify the mode requirements for the two separate functions and specifically address the following question: Is the system which provides the shutdown cooling function (function 2) required to be monitored for unavailability in all modes even if removing it has no impact on the post accident recirculation function?~~

~~**Response**~~
~~Reporting of unavailability hours for multi-system should be counted only during the time the particular affected function is required by technical specifications.~~
~~The two systems are added together to derive the total hours of RHR unavailability to be reported. Overlap times when both functions/systems are required can be adjusted to eliminate double counting the same incident.~~

~~ID~~	~~Question~~
~~150~~	~~Prior to performing surveillance testing, a Diesel Generator may be placed in an unavailable condition to allow for moisture checks. This may require opening all cylinder petcocks (test valves) and engaging the engine barring device. WANO guidance allows for not reporting unavailable hours provided the testing configuration can be quickly overridden within a few minutes by the control room or having operators stationed locally for that specific purpose. Does this condition require reporting unavailable hours to the NRC?~~

~~**Response**~~
~~Yes. The situation described is more complex than the few simple operator actions that current guidance allows to be excluded.~~

~~ID~~	~~Question~~
~~151~~	~~Section 2.2, Mitigating Systems Cornerstone, Safety System Unavailability, Clarifying Notes, Hours Train Required states the Emergency AC power system value is estimated by the number of hours in the reporting period because emergency generators are normally expected to be available for service during both plant operations and shutdown. Considering only one train of Emergency AC power systems may be required in certain operational modes (e.g. when defueled), should actual required hours be determine for each train in place of using the default period hours? In certain operational modes it appears inconsistent to use period hours for hours required, yet not report the unavailable hours if a train is removed from service and Technical Specifications are still satisfied.~~ ~~Response~~ ~~For the situation described it is acceptable to report the default value that is period hours.~~

~~ID~~	~~Question~~
~~152~~	~~Support systems (service water, component cooling, electrical) at our plant for HPSI and RHR each contain 100% redundant equipment. On a periodic basis, these systems and equipment are realigned to swap components, flow paths or alignments as part of normal operation. The evolutions are frequently performed, by procedure with the operator in close contact with the control room and dedicated to the evolutions. The evolutions can be stopped, backed out and the systems restored to the original configuration at any point of the procedure. The ability of safety systems HPSI and RHR to actuate and start is not impaired by these evolutions. Restoration actions are virtually certain to be successful. Does the time to perform these evolutions on a support system need to be counted as unavailability for HPSI and RHR?~~ ~~Response~~ ~~No. As described in the question, the ability of safety systems HPSI and RHR to actuate and start is not impaired by these evolutions. There are no unavailable hours.~~

~~ID~~	~~Question~~
~~153~~	~~The 99-02 mitigating system guidance and FAQ's indicate that unless we can "promptly" recover the system, we must count it as unavailable. Is this correct as applied to the RHR Unavailability PI?~~ ~~Our position for the RHR suppression pool cooling/shutdown cooling PI for INPO reporting has been that up to a 5 hour recoverability time is appropriate in contrast to the 99-02 criteria of "promptly". We understand it's appropriateness for HPCI, RCIC and the diesels since they are expected to automatically and "immediately" respond to a plant event. Use of this 99-02 criteria will have implications for our work management practices. Use of this criterion makes no sense for a system that does not have to respond automatically to an event.~~ ~~Response~~ ~~Yes. However, the unavailable hours are not counted provided an NRC approved alternative method of removing decay heat is available.~~

~~ID~~	~~Question~~
~~154~~	~~When accounting for Fault Exposure Hours during a current quarter it is discovered that the Fault Exposure Hours (T/2) would also have been accrued in the previous quarter (overlapped with~~

~~previous quarter). Does the previously submitted quarterly data need to be revised to reflect the Fault Exposure Hours that were assumed to occur in the previous quarter?~~

~~**Response**~~

~~The fault exposure unavailable hours associated with a component failure may include unavailable hours covering several reporting periods (e.g., several quarters). In this case, the fault exposure unavailable hours should be assigned to the appropriate reporting periods. For example, if a failure is discovered on the 10th day of a quarter and the estimated number of unavailable hours is 300 hours, then 240 hours should be counted for the current quarter and 60 unavailable hours should be counted for the previous quarter. Note: This will require an update of the previous quarter's data.~~

~~D~~ ~~**Question**~~

~~155~~ ~~If a plant has two, 100% capacity, NRC approved, alternate shutdown cooling trains in operation during a refueling outage, may the plant take credit for these two trains and take both trains of the residual heat removal system out of service at the same time without incurring unavailability?~~

~~**Response**~~

~~Yes, provided that both alternate means of heat removal are capable of performing the heat removal function when placed in service simultaneously.~~

Data Example

	A	B	C	D	E	F	G	H	I	J	K	L	M	N	O	P	Q	R
1	Safety System Unavailability ((SSU), AC Emergency Power, 'UNIT ONE																	
2																		
3	*Train 1 A*	2Q/95	3Q/95	4Q/95	1Q/96	2Q/96	3Q/96	4Q/96	1Q/97	2Q/97	3Q/97	4Q/97	1Q/98	2Q/98	3Q/98	4Q/98	Prev. Qrtr	
4	Planned Unavailable Hours	5	0	5	0	128	0	0	0	0	0	128	0	0	0	0	10	
5	Unplanned Unavailable Hours	0	0	0	48	0	5	0	0	36	0	12	0	0	24	0	48	
6	Fault Exposure Unavailable	0	0	5	32	0	504	0	0	336	0	36	0	0	24	0	128	
7	Hours Unavailable (quarter)	5	0	10	80	128	509	0	0	372	0	176	0	0	48	0	186	
8	Total Hours Unavailable												1280	1275	1323	1313	1419	
9	Hours Train Required for Service	2160	2184	2208	2208	2160	2184	2208	2208	2160	2184	1104	2208	2160	2184	2208	2208	
10	Total Hrs Train Req'd for Service												25176	25176	25176	25176	25176	
11	Train Unavailability												0.050842	0.050643	0.05255	0.052153	0.056363	
12																		
13																		
14	*Train S (Swing EDG)*	2Q/95	3Q/95	4Q/95	1Q/96	2Q/96	3Q/96	4Q/96	1Q/97	2Q/97	3Q/97	4Q/97	1Q/98	2Q/98	3Q/98	4Q/98	Prev. Qrtr	
15	Planned Unavailable Hours	0	16	6	0	0	0	4	0	0	0	128	0	4	0	4	0	
16	Unplanned Unavailable Hours	11	0	0	0	56	11	0	1	0	0	12	0	0	1	0	0	
17	Fault Exposure Unavailable	0	60	0	0	0	70	148	0	65	0	131	3	0	0	19	0	
18	Hours Unavailable (quarter)	11	76	6	0	56	81	152	1	65	0	271	3	4	1	23	0	
19	Total Hours Unavailable												722	715	640	657	657	
20	Hours Train Required for Service	2160	2184	2208	2208	2160	2184	2208	2208	2160	2184	1104	2208	2160	2184	2208	2208	
21	Total Hrs Train Req'd for Service												25176	25176	25176	25176	25176	
22	Train Unavailability												0.028678	0.0284	0.025421	0.026096	0.026096	
23																		
24																		
25	For EDG system, two unit, one dedicated, one swing EDG																	
26	Quarter												1Q/98	2Q/98	3Q/98	4Q/98	Prev. Qrtr	
27	System unavailability												4.0%	4.0%	3.9%	3.9%	4.1%	
28																		
29																		

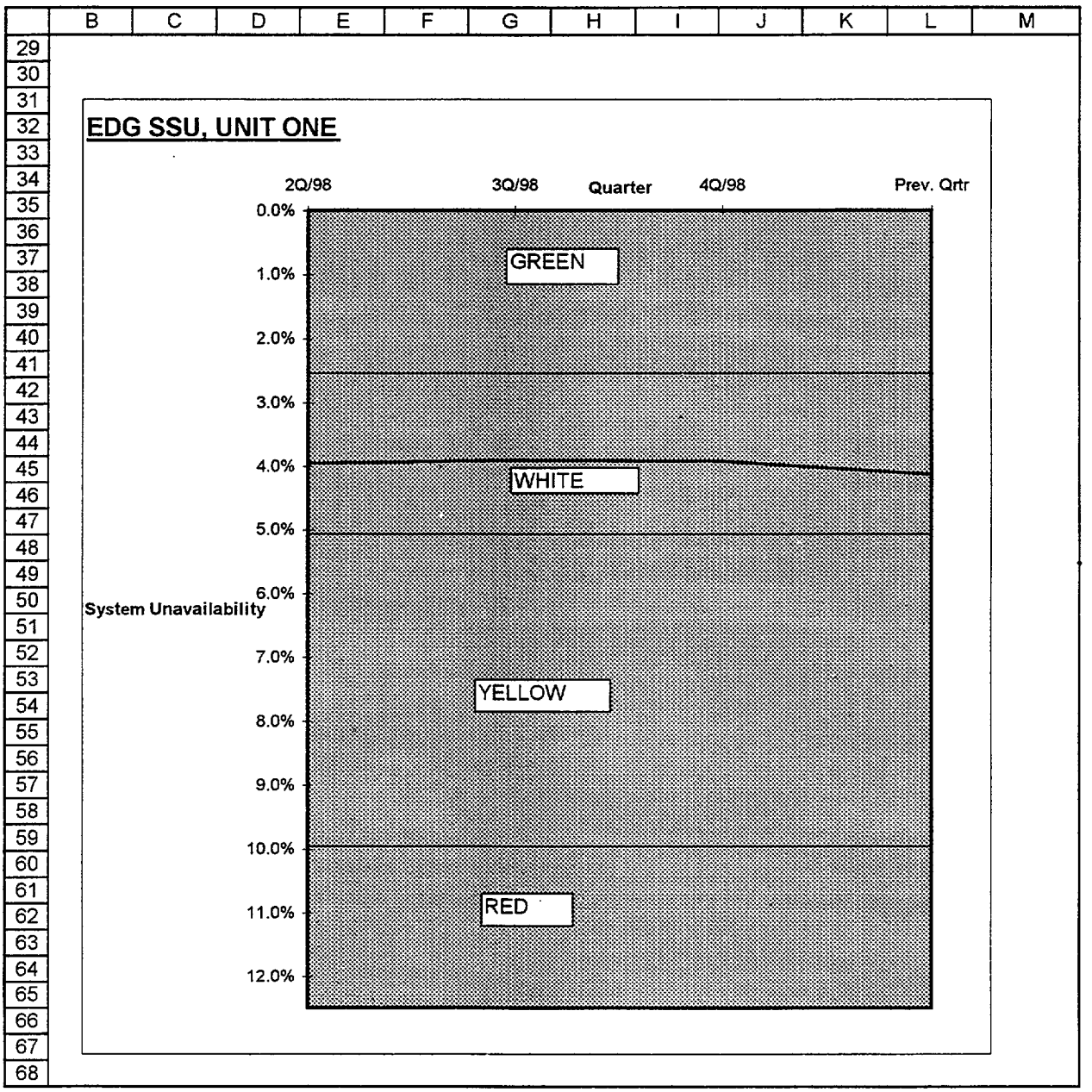
EDG SSU, UNIT ONE
2Q/98
3Q/98
Quarter
4Q/98
Prev. Qrtr
0.0%
1.0%
2.0%
3.0%
4.0%
5.0%
6.0%
7.0%
8.0%
9.0%
10.0%
11.0%
12.0%
System Unavailability
GREEN
WHITE
YELLOW
RED

ADDITIONAL GUIDANCE FOR SPECIFIC SYSTEMS

Emergency AC Power Systems

Definition and Scope

This section provides additional guidance for reporting performance of the emergency AC power system. The emergency AC power system is typically comprised of two or more independent emergency generators that provide AC power to class 1E buses following a loss of off-site power. The emergency generator dedicated to providing AC power to the high pressure core spray system in BWRs is also within the scope of emergency AC power.

The function monitored for the indicator is:

- The ability of the emergency generators to provide AC power to the class lE buses upon a loss of off-site power.

Most emergency generator trains include dedicated subsystems such as air start, lube oil, fuel oil, cooling water, etc. Support systems can include service water, DC power, and room cooling. Generally, unavailable hours are counted if a failure or unavailability of a dedicated subsystem or a support subsystem prevents the emergency generator from performing its function. Some examples are discussed in the clarifying notes for this attachment.

The electrical circuit breaker(s) that connect(s) an emergency generator to the class lE buses that are normally served by that emergency generator are considered to be part of the emergency generator train.

Emergency generators that are not safety grade, or that serve a backup role only (e.g., an alternate AC power source), are not required to be included in the performance reporting.

Train Determination

The system unavailability is calculated on a per unit basis using the train unavailability value for each emergency diesel generator (EDG) that provides emergency AC power to that unit. The number of emergency AC power system trains for a unit is equal to the number of class 1E emergency generators that are available to power safe-shutdown loads in the event of a loss of off-site power for that unit. There are three typical configurations for EDGs at a multi-unit station:

1. EDGs dedicated to only one unit.
2. One or more EDGs are available to "swing" to either unit
3. All EDGs can supply all units

For configuration 1, the number of trains for a unit is equal to the number of EDGs dedicated to the unit. For configuration 2, the number of trains for a unit is equal to the number of dedicated EDGs for that unit plus the number of "swing" EDGs available to that unit (i.e., The "swing" EDGs are included in the train count for each unit). For configuration 3, the number of trains is equal to the number of EDGs.

Clarifying Notes

Emergency diesel generators that are dedicated to the High Pressure Core Spray (HPCS) in some BWRs should be included as a train in the Emergency AC Power calculation.

When a unit(s) is shutdown, ~~one~~ emergency AC power trains ~~at a time~~ may be removed from service in accordance with the plant's technical specifications without incurring planned or unplanned unavailable hours. ~~under the following conditions~~

~~For a single or multi-unit station with all units shut down, one emergency generator (EDG) at a time may be electively removed from service without reporting planned and unplanned unavailable hours providing that at least one functional EDG is available to supply emergency loads.~~

~~For a multi-unit station with one unit shut down and all other units operating, one EDG at a time may be electively removed from service without reporting planned and unplanned unavailable hours providing that both of the following criteria are satisfied:~~

~~the EDG removed from service is associated primarily with a unit that is shut down.~~

- ~~removal of the EDG from service has little effect on the safety of the operating units (i.e., required emergency loads for each operating unit can be met, even when accounting for the single failure of an operable EDG), and there is still an operable emergency generator available to the shutdown unit.~~

Fault exposure unavailable hours are not counted for failures of an EDG to start or load-run if the failure can be definitely attributed to reasons listed in the General Clarifying Notes for Safety System Unavailability, or to any of the following:

- spurious operation of a trip that would be bypassed in the loss of offsite power emergency operating mode (e.g., high cooling water temperature trip that erroneously tripped an EDG although cooling water temperature was normal).

- malfunction of equipment that is not required to operate during the loss of offsite power emergency operating mode (e.g., circuitry used to synchronize the EDG with off-site power sources, but not required when off-site power is lost)

- a failure to start because a redundant portion of the starting system was intentionally disabled for test purposes, if followed by a successful start with the starting system in its normal alignment

When determining fault exposure unavailable hours for a failure of an EDG to load-run following a successful start, the last successful operation or test is the previous successful load-run (not just a successful start). To be considered a successful load-run operation or test, an EDG load-run attempt must have followed a successful start and satisfied one of the following criteria:

- a load-run of any duration that resulted from a real (e.g., not a test) manual or automatic start signal

- a load-run test that successfully satisfied the plant's load and duration test specifications

- other operation (e.g., special tests) in which the emergency generator was run for at least one hour with at least 50 percent of design load.

When an EDG fails to satisfy the 12/18/24-month 24-hour duration surveillance test, the faulted hours are computed based on the last known satisfactory load test of the diesel generator as defined in the three bullets above. For example, if the EDG is shut down during a surveillance test because of a failure that would prevent the EDG from satisfying the surveillance criteria, the fault exposure unavailable hours would be computed based upon the time of the last surveillance test that would have exposed the discovered fault.

The emergency diesel generators are not considered to be available during the following portions of periodic surveillance tests unless the requirement that recovery be virtually certain during accident conditions can be satisfied:

- Load-run testing
- Fire Protection "puff" testing
- Barring

BWR High Pressure Injection Systems

(High Pressure Coolant Injection, High Pressure Core Spray, and Feedwater Coolant Injection)

Definition and Scope

This section provides additional guidance for reporting the performance of three BWR systems used primarily for maintaining reactor coolant inventory at high pressures: the high pressure coolant injection (HPCI), high pressure core spray (HPCS), and feedwater coolant injection (FWCI) systems. Plants should monitor either the HPCI, HPCS, or FWCI system, depending on which is installed. These systems function at high pressure to maintain reactor coolant inventory and to remove decay heat following a small-break Loss of Coolant Accident (LOCA) event or a loss of main feedwater event.

The function monitored for the indicator is:

- The ability of the monitored system to take suction ~~from the condensate storage tank or~~ from the suppression pool (and from the condensate storage tank, if credited in the plant's accident analysis) and inject at rated pressure and flow into the reactor vessel.

This capability is monitored for the injection and recirculation phases of the high pressure system response to an accident condition.

Figures 2.1, 2.2, and 2.3 show generic schematics for the HPCI, HPCS, and FWCI systems, respectively. These schematics indicate the components for which train unavailable hours normally are monitored. Plant-specific design differences may require other components to be included.

Train Determination

The HPCI system is considered a single-train system. The booster pump and other small pumps shown in Figure 2.1 are ancillary components not used in determining the number of trains. The effect of these pumps on HPCI performance is included in the system unavailability indicator to the extent their failure detracts from the ability of the system to perform its monitored function. The HPCI turbine, governor, and associated valves and piping for steam supply and exhaust are in the scope of the HPCI system. Valves in the feedwater line are not considered within the scope of the HPCI system.

The HPCS system is also considered a single-train system. Unavailability is monitored for the components shown in Figure 2.2. The HPCS diesel generator is considered to be part of the emergency AC power system.

For the feedwater injection system, the number of trains is determined by the number of main feedwater pumps that can be used at one time in this operating mode (typically one). Figure 2.3 illustrates a typical FWCI system.

Clarifying Notes

The HPCS system typically includes a "water leg" pump to prevent water hammer in the HPCS piping to the reactor vessel. The "water leg" pump and valves in the "water leg" pump flow path are ancillary components and are not directly included in the scope of the HPCS system for the performance indicator.

For the feedwater coolant injection system, condensate and feedwater booster pumps are not used to determine the number of trains.

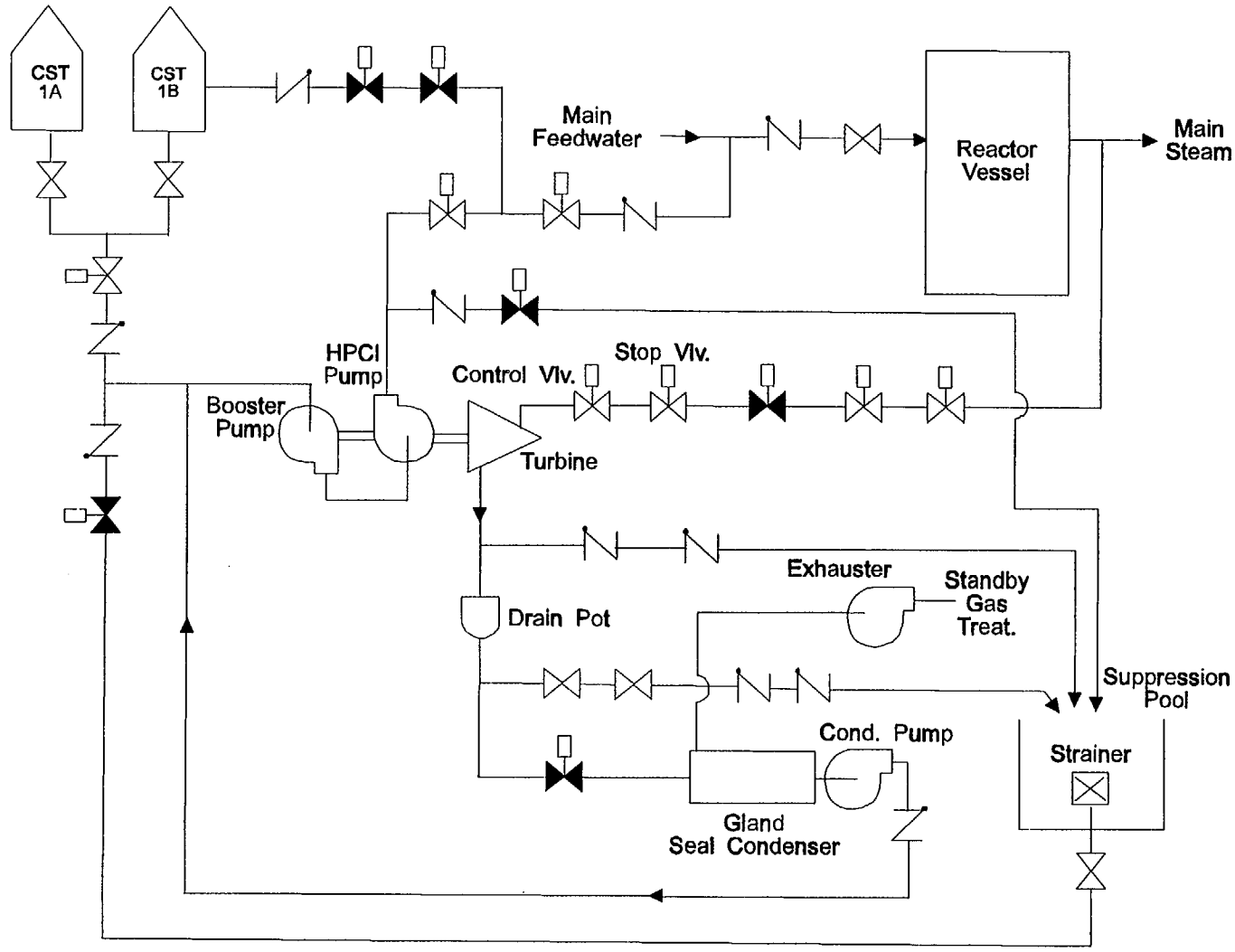

Figure 2.1
High Pressure Coolant Injection System
(Example of Reporting Scope)

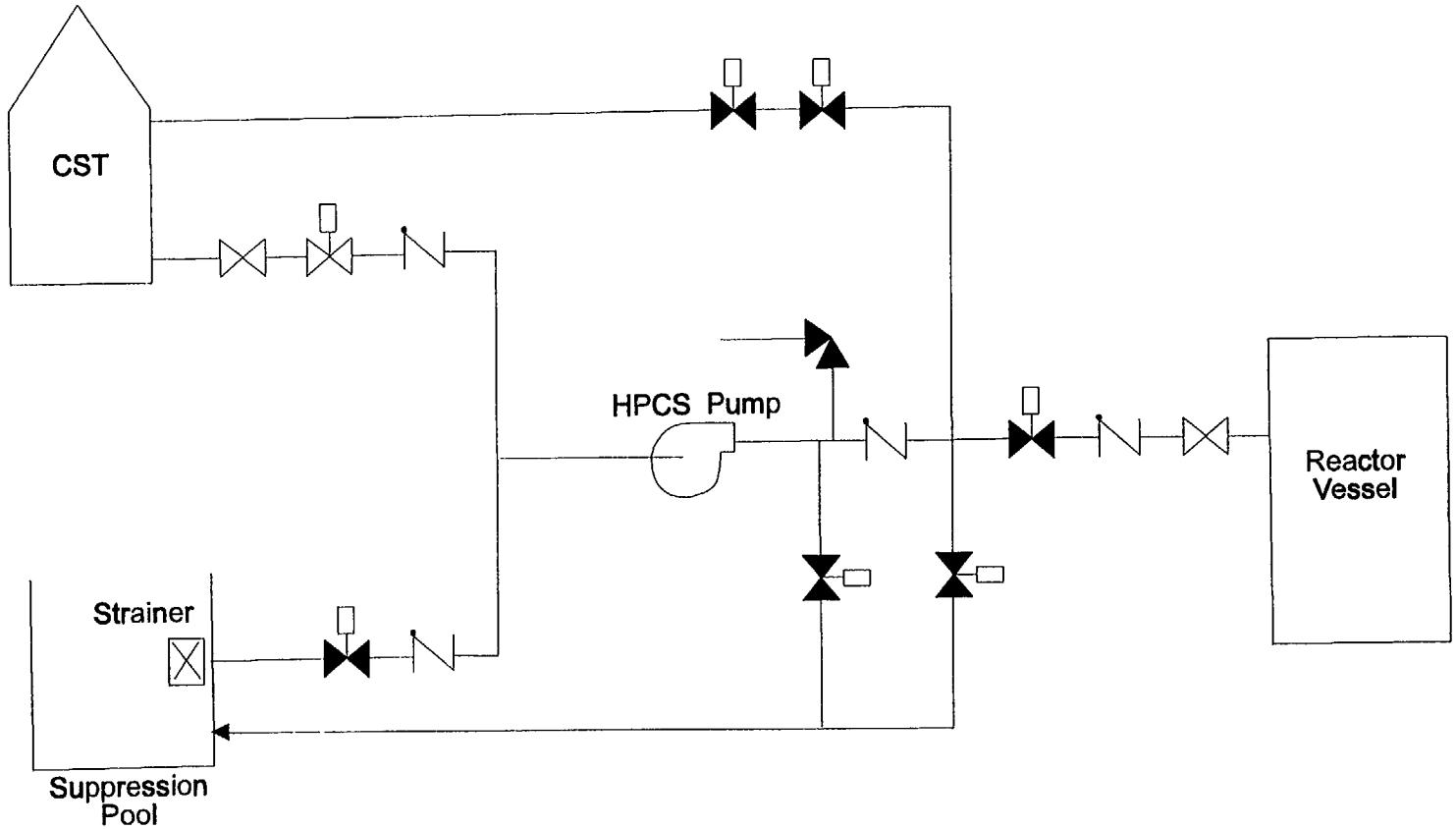

Figure 2.2
High Pressure Core Spray System
(Example of Reporting Scope)

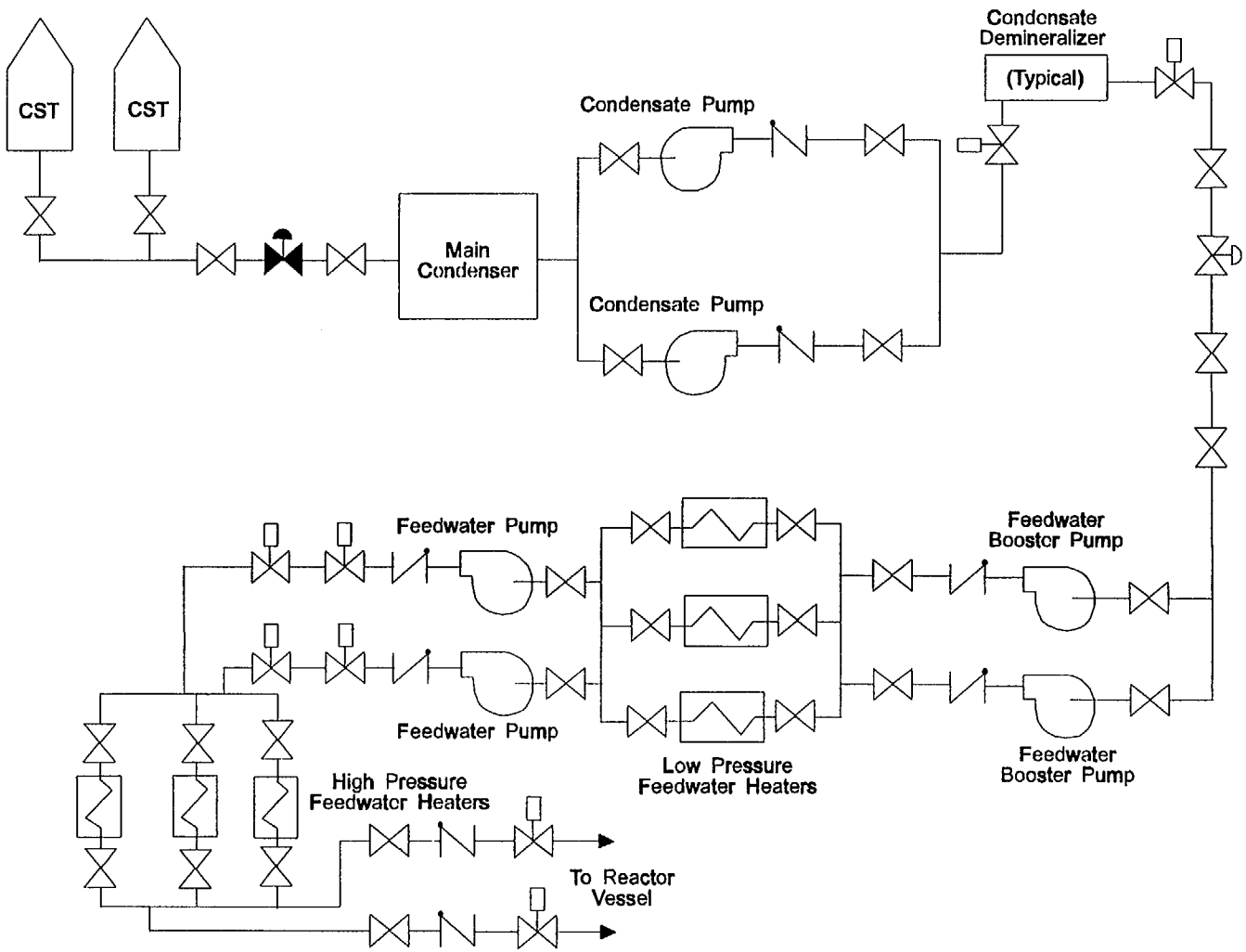

Figure 2.3
Feedwater Coolant Injection System
(Example of Reporting Scope)

BWR Heat Removal Systems

(Reactor Core Isolation Cooling)

Definition and Scope

This section provides additional guidance for reporting the performance of a BWR system that is used primarily for decay heat removal at high pressure: reactor core isolation cooling (RCIC) system. This system functions at high pressure to remove decay heat following a loss of main feedwater event. The RCIC system also functions to maintain reactor coolant inventory following a very small LOCA event.

The function monitored for the indicator, is:

- the ability of the RCIC system to cool the reactor vessel core and provide makeup water by taking a suction from either the condensate storage tank or the suppression pool and injecting at rated pressure and flow into the reactor vessel

Figures 3.1 shows a generic schematic for the RCIC system. This schematic indicates the components for which train unavailability is monitored. Plant-specific design differences may require other components to be included.

Train Determination

The RCIC system is considered a single-train system. The condensate and vacuum pumps shown in Figure 3.1 are ancillary components not used in determining the number of trains. The effect of these pumps on RCIC performance is included in the system unavailability indicator to the extent that a component failure results in an inability of the system to perform its monitored function. The RCIC turbine, governor, and associated valves and piping for steam supply and exhaust are in the scope of the RCIC system. Valves in the feedwater line are not considered within the scope of the RCIC system.

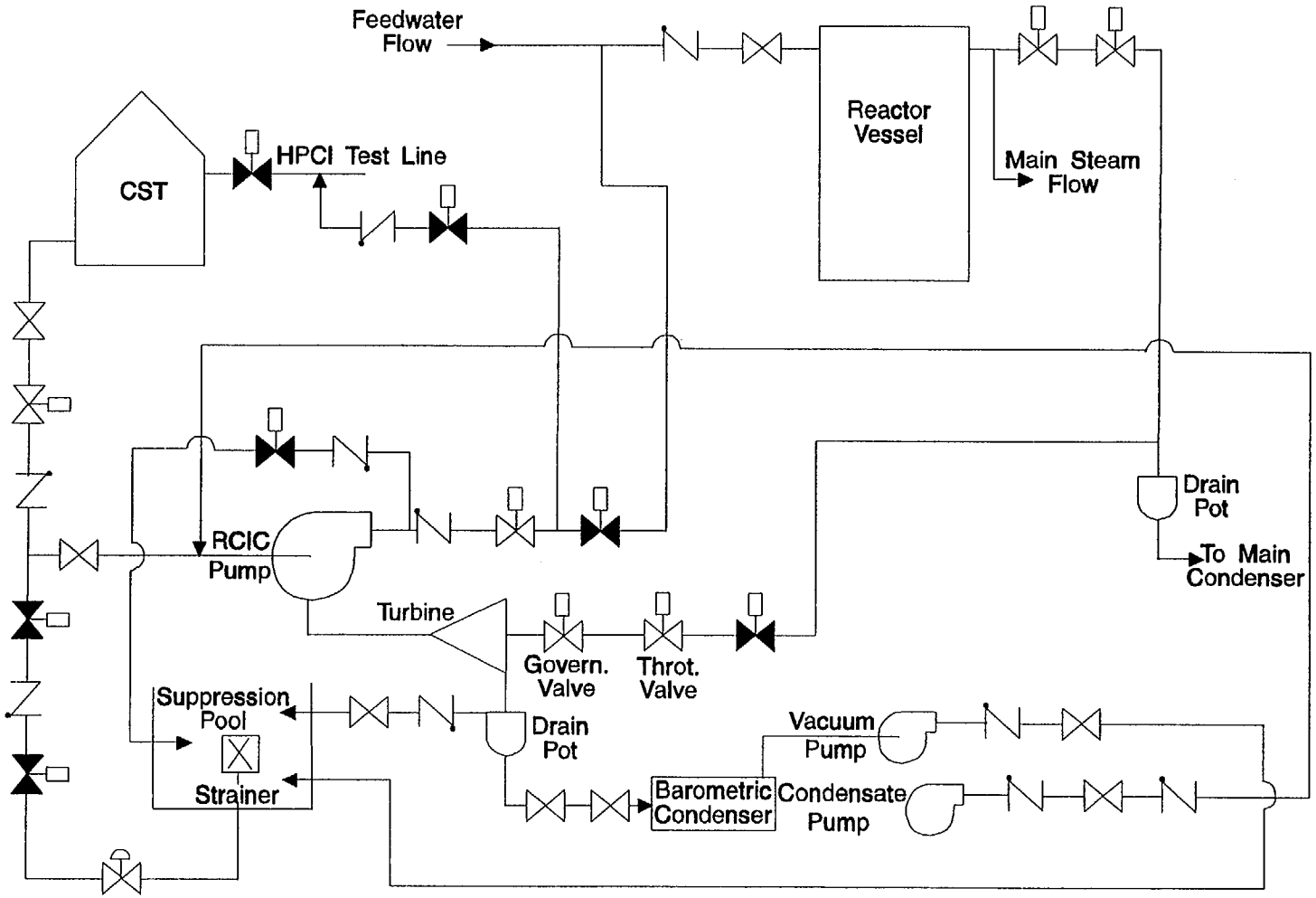

Figure 3.1
Reactor Core Isolation Cooling System
(Example of Reporting Scope)

BWR Residual Heat Removal Systems

Definition and Scope

This section provides additional guidance for reporting the performance of the BWR residual heat removal (RHR) system for the suppression pool cooling and shutdown cooling modes. The attachment also includes guidance for reporting performance of other systems used to remove heat to outside containment under low pressure conditions at early BWRs where two separate systems provide these functions with unique designs. The suppression pool cooling function is used whenever the suppression pool (or torus) water temperature exceeds or is expected to exceed a high-temperature setpoint (for example, following most relief valve openings or during some post-accident recoveries). The shutdown cooling function is used following any transient requiring normal long-term heat removal from the reactor vessel.

The functions monitored for the indicator are:

- the ability of the RHR system to remove heat from the suppression pool so that pool temperatures do not exceed plant design limits, and

- the ability of the RHR system to remove decay heat from the reactor core during a normal unit shutdown (e.g., for refueling or for servicing).

Figures 4.1 and 4.2 show generic schematics with the RHR system in the suppression pool cooling and shutdown cooling modes, respectively. Two variations of basic RHR system design are shown in Figures 4.3 and 4.4. These are included to illustrate reporting for systems with redundant and series components, respectively. The figures indicate the components for which train unavailability is monitored. Plant-specific design differences may require other components to be included.

Train Determination

The number of trains in the RHR system is determined by the number of parallel RHR heat exchangers capable of performing suppression pool cooling or shutdown cooling. The following discussion demonstrates train determination for various generic system designs.

Figures 4.1 and 4.2 illustrate a common RHR system that incorporates four pumps and two heat exchangers arranged so that each heat exchanger can be supplied by one of two pumps. This is a two-train RHR system.

Some trains have two heat exchangers in series, as shown in Figure 4.3. The system depicted in Figure 4.3 is also a two-train RHR system.

Figure 4.4 shows an arrangement with four parallel sets of a pump and a heat exchanger combination. This system is a four-train RHR system.

Other Systems: For some early BWRs, separate systems are used to remove heat to outside the containment under low pressure conditions. Depending on the particular design, one or more of the following systems may be used: shutdown cooling, containment spray, or RHR (torus cooling function). For example, a unit using a shutdown cooling system (with three heat exchangers)and a containment spray system (with two heat exchangers) would monitor each system separately for the safety system unavailability indicators. All components required for each safety system to perform its heat removal function should be included in the scope. The number of trains is determined by the number of heat exchangers in the systems that perform the heat removal function under low pressure conditions (five trains in this example).

Clarifying Notes

The low pressure coolant injection (LPCI), steam cooling, and containment spray modes of RHR operation are not monitored.

Some components are used to provide more than one function of RHR. If a component cannot perform as designed, rendering its associated train incapable of meeting one or both of the monitored functions, then the train is considered to be failed. Unavailable hours (if the train was required to be available for service) would be reported as a result of the component failure.

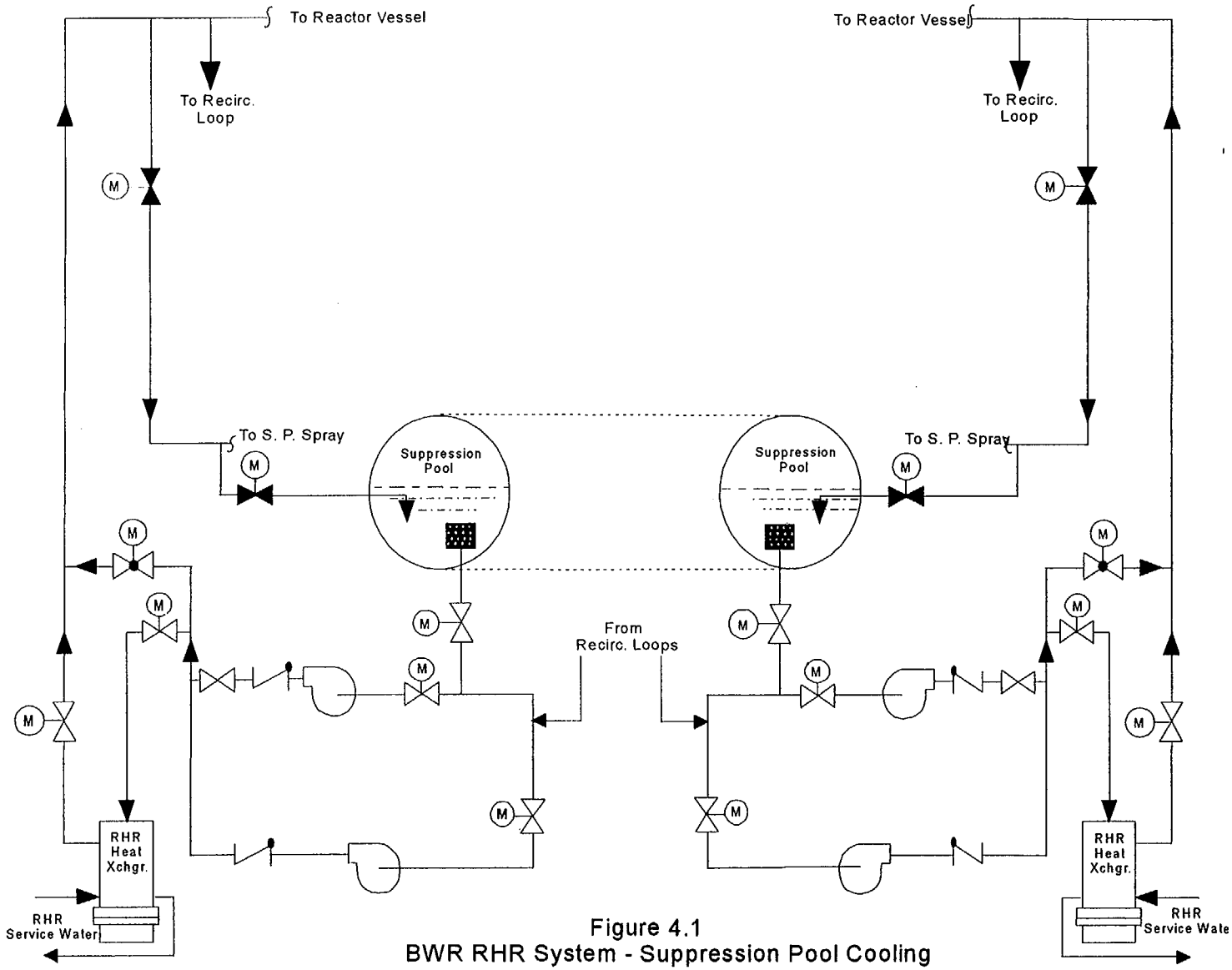

Figure 4.1
BWR RHR System - Suppression Pool Cooling

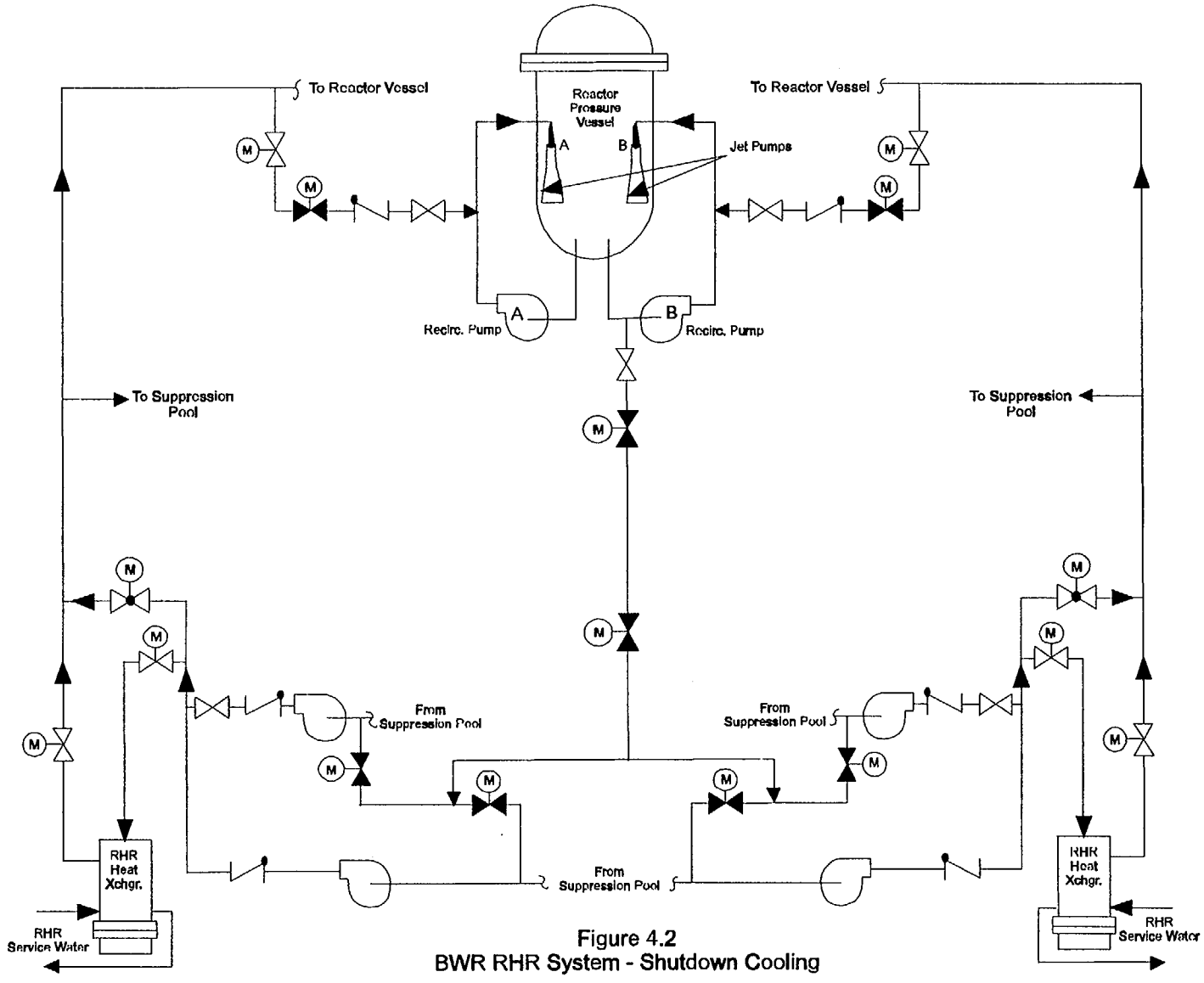

Figure 4.2
BWR RHR System - Shutdown Cooling

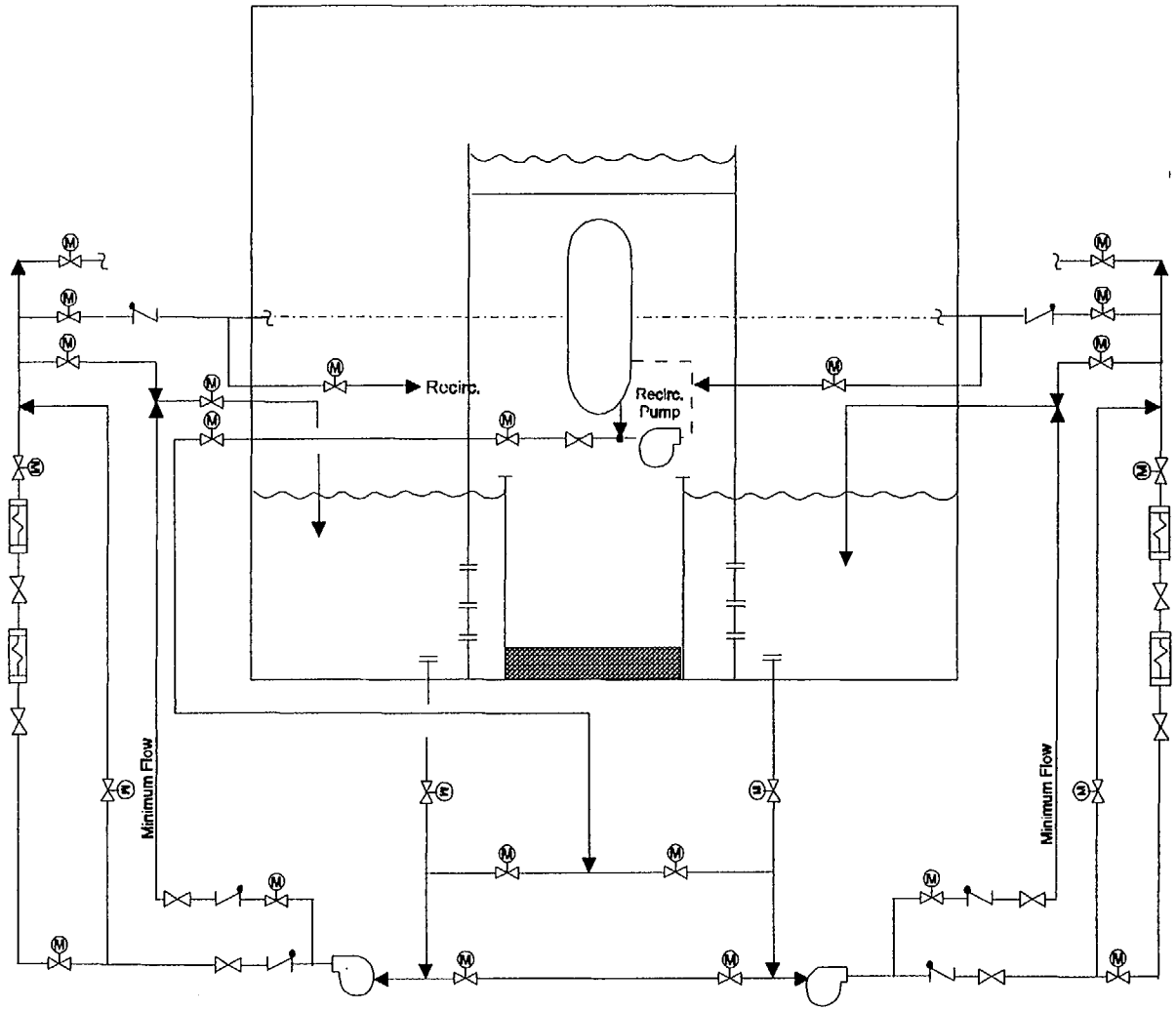

Figure 4.3
Two-Train BWR RHR System
(Example of Reporting Scope)

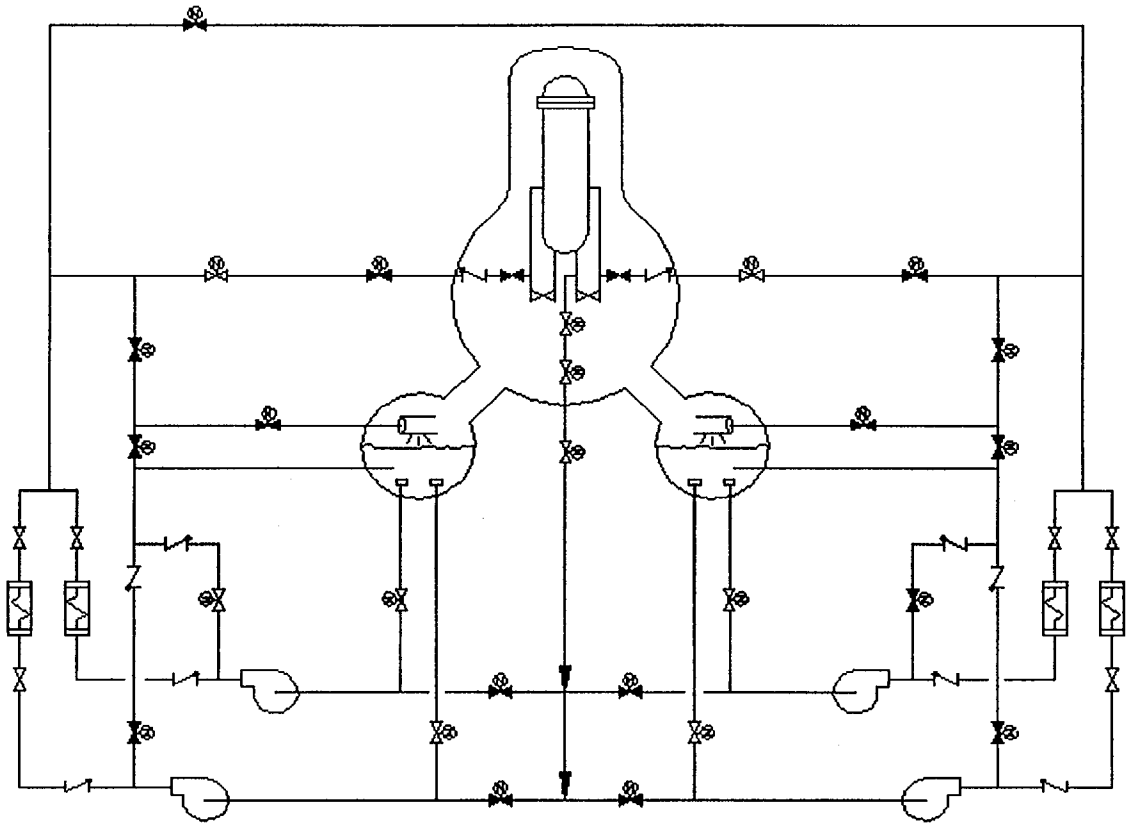

Figure 4.4 - 4 Train BWR RHR System

PWR High Pressure Safety Injection Systems

Definition and Scope

This section provides additional guidance for reporting the performance of PWR high pressure safety injection (HPSI) systems. These systems are used primarily to maintain reactor coolant inventory at high pressures following a loss of reactor coolant. HPSI system operation following a small-break LOCA involves transferring an initial supply of water from the refueling water storage tank (RWST) to cold leg piping of the reactor coolant system. Once the RWST inventory is depleted, recirculation of water from the reactor building emergency sump is required. Components in the flow paths from each of these water sources to the reactor coolant system piping are included in the scope for the HPSI system. (Because the residual heat removal system has been added to the PWR scope, the isolation valve(s) between the RHR system and the HPSI pump suction is the boundary of the HPSI system. The RHR pumps used for piggyback operation are no longer in HPSI scope.)

There are design differences among HPSI systems that affect the scope of the components to be included for the HPSI system function. For the purpose of the safety system unavailability indicator, and where applicable, the HPSI system includes high head pumps (centrifugal charging pumps/high head safety injection pumps) which discharge at pressures of 2,200-2,500 psig and intermediate head pumps (intermediate head safety injection pumps) which discharge at pressures of 1200-1700 psig, along with associated components in the suction and discharge piping to the reactor coolant system cold-legs or hot-legs.

The function monitored for HPSI is:

- the ability of a HPSI train to take a suction from the primary water source (typically, a borated water tank), or from the containment emergency sump, and inject into the reactor coolant system at rated flow and pressure.

The charging and seal injection functions provided by centrifugal charging pumps in some system designs are not included within the scope of the safety system unavailability indicator reports.

Figures 5.1 through 5.4 show some typical HPSI system configurations for which train functions are monitored. The figures contain variations that are somewhat reactor vendor specific. They also indicate the components for which train unavailability is monitored. Plant-specific design differences may require other components to be included.

Train Determination

In general, the number of HPSI system trains is defined by the number of high head injection paths that provide cold-leg and/or hot-leg injection capability, as applicable. This is necessary to fully account for system redundancy.

Figure 5.1 illustrates a typical HPSI system for Babcock and Wilcox (B&W) reactors. The design features centrifugal pumps used for high pressure injection (about 2,500 psig) and no hot-leg injection path. Recirculation from the containment sump requires operation of pumps in the residual heat removal system. The system in Figure 5.1 is a two-train system, with an installed spare pump (depending on plant-specific design) that can be aligned to either train.

HPSI systems in some older, two-loop Westinghouse plants may be similar to the system represented in Figure 5.1, except that the pumps operate at a lower pressure (about 1600 psig) and there may be a hot-leg injection path in addition to a cold-leg injection path (both are included as a part of the train).

Figure 5.2 is typical of HPSI designs in Combustion Engineering (CE) plants. The design features three centrifugal pumps that operate at intermediate pressure (about 1300 psig) and provide flow to two cold-leg injection paths or two hot-leg injection paths. In most designs, the HPSI pumps take suction directly from the containment sump for recirculation. In these cases, the sump suction valves are included within the scope of the HPSI system. This is a two-train system (two trains of combined cold-leg and hot-leg injection capability). One of the three pumps is typically an installed spare that can be aligned to either train or only to one of the trains (depending on plant-specific design).

A HPSI system typical of those installed in Westinghouse three-loop plants is shown in Figure 5.3. This design features three centrifugal pumps that operate at high pressure (about 2500 psig), a cold-leg injection path through the BIT (with two trains of redundant valves), an alternate cold-leg injection path, and two hot-leg injection paths. One of the pumps is considered an installed spare. Recirculation is provided by taking suction from the RHR pump discharges. A train consists of a pump, the pump suction valves and boron injection tank (BIT) injection line valves electrically associated with the pump, and the associated hot-leg injection path. The alternate cold-leg injection path is required for recirculation, and should be included in the train with which its isolation valve is electrically associated. Thus, Figure 5.3 represents a two-train HPSI system.

Four-loop Westinghouse plants may be represented by Figure 5.4. This design features two centrifugal pumps that operate at high pressure (about 2500 psig), two centrifugal pumps that operate at an intermediate pressure (about 1600 psig), a BIT injection path (with two trains of injection valves), a cold-leg safety injection path, and two hot-leg injection paths. Recirculation is provided by taking suction from the RHR pump discharges. Each of two high pressure trains is comprised of a high pressure centrifugal pump, the pump suction valves and BIT valves that are electrically associated with the pump. Each of two intermediate pressure trains is comprised of the safety injection pump, the suction valves and the hot-leg injection valves electrically associated with the pump. The cold-leg safety injection path can be fed with either safety injection pump, thus it should be associated with both intermediate pressure trains. The HPSI system represented in Figure 5.4 is considered a four-train system for monitoring purposes.

Clarifying Notes

Many plants have charging pumps (typically, positive displacement charging pumps) that are not safety-related, provide a small volume of flow, and do not automatically start on a safety injection signal. These pumps should not be included within the scope of HPSI system for this indicator.

Some HPSI components may be included in the scope of more than one train. For example, cold-leg injection lines may be fed from a common header that is supplied by both HPSI trains. In these cases, the effects of testing or component failures in an injection line should be reported in both trains.

At many plants, recirculation of water from the reactor building sump requires that the high pressure injection pump take suction via the low pressure injection/residual heat removal pumps. For these plants, the low pressure injection/residual heat removal pumps discharge header isolation valve to the HPSI pump suction is included in the scope of HPSI system.

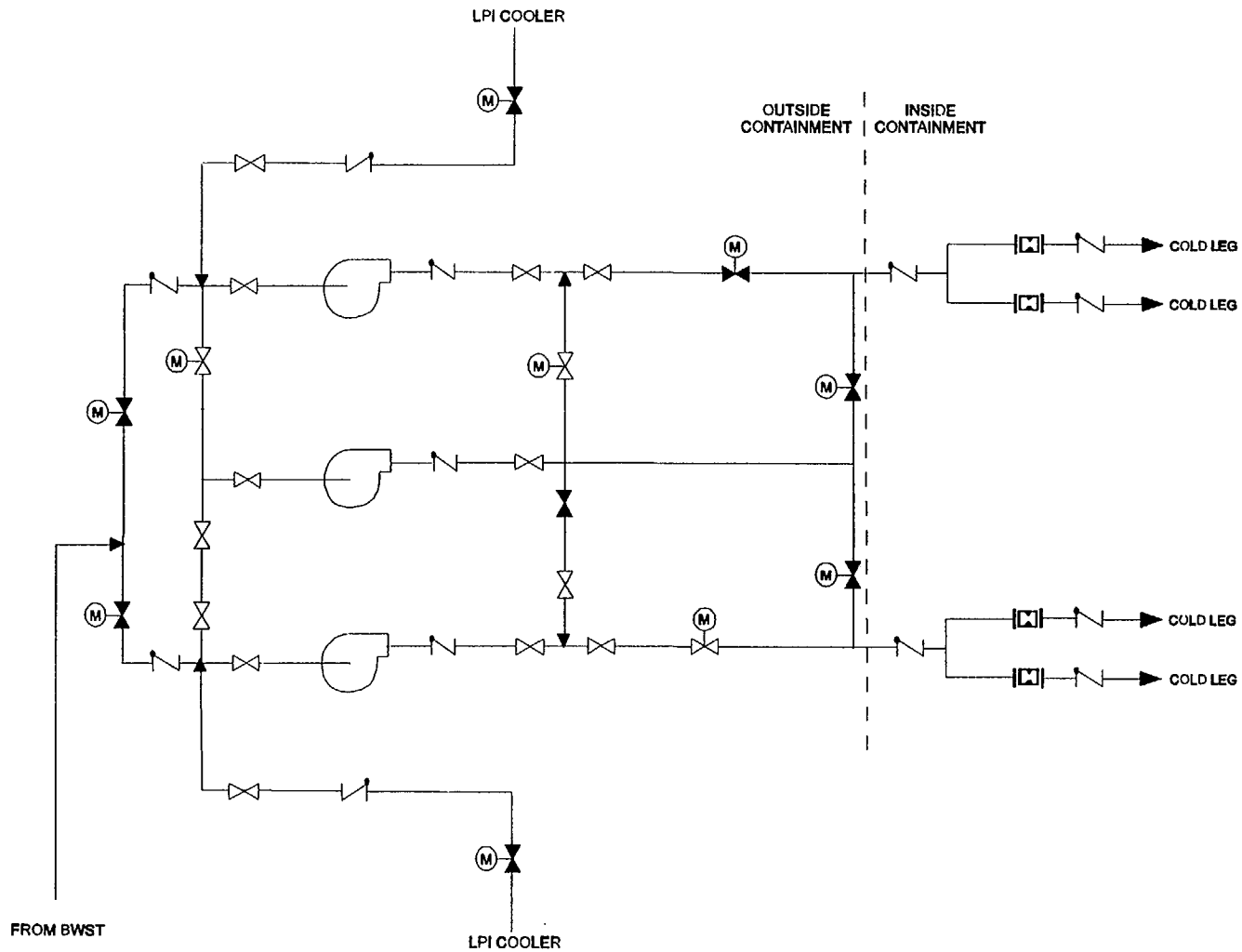

Figure 5.1
High Pressure Safety Injection System
(Example of Reporting Scope)

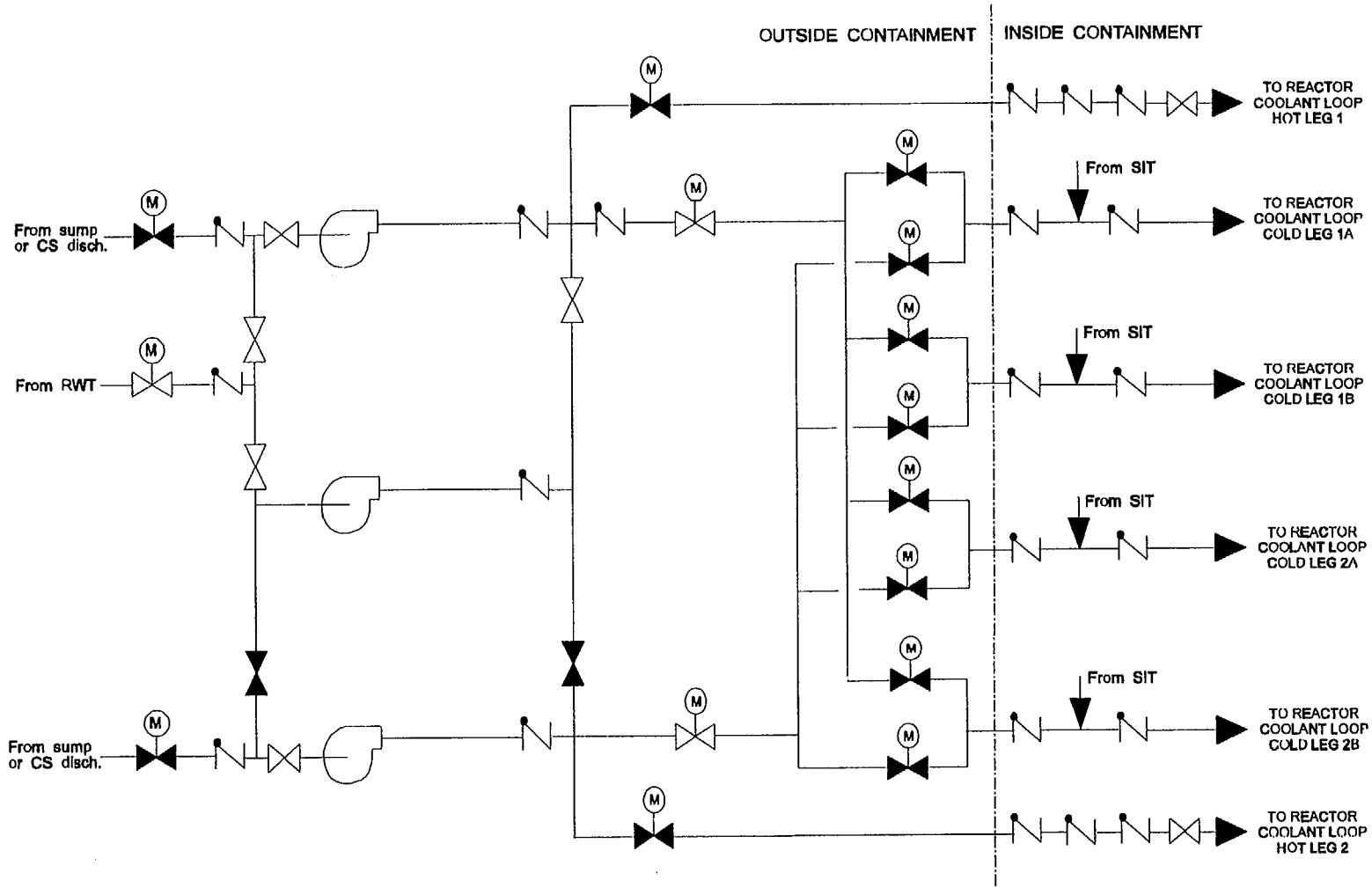

Figure 5.2
High Pressure Safety Injection System
(Example of Reporting Scope)

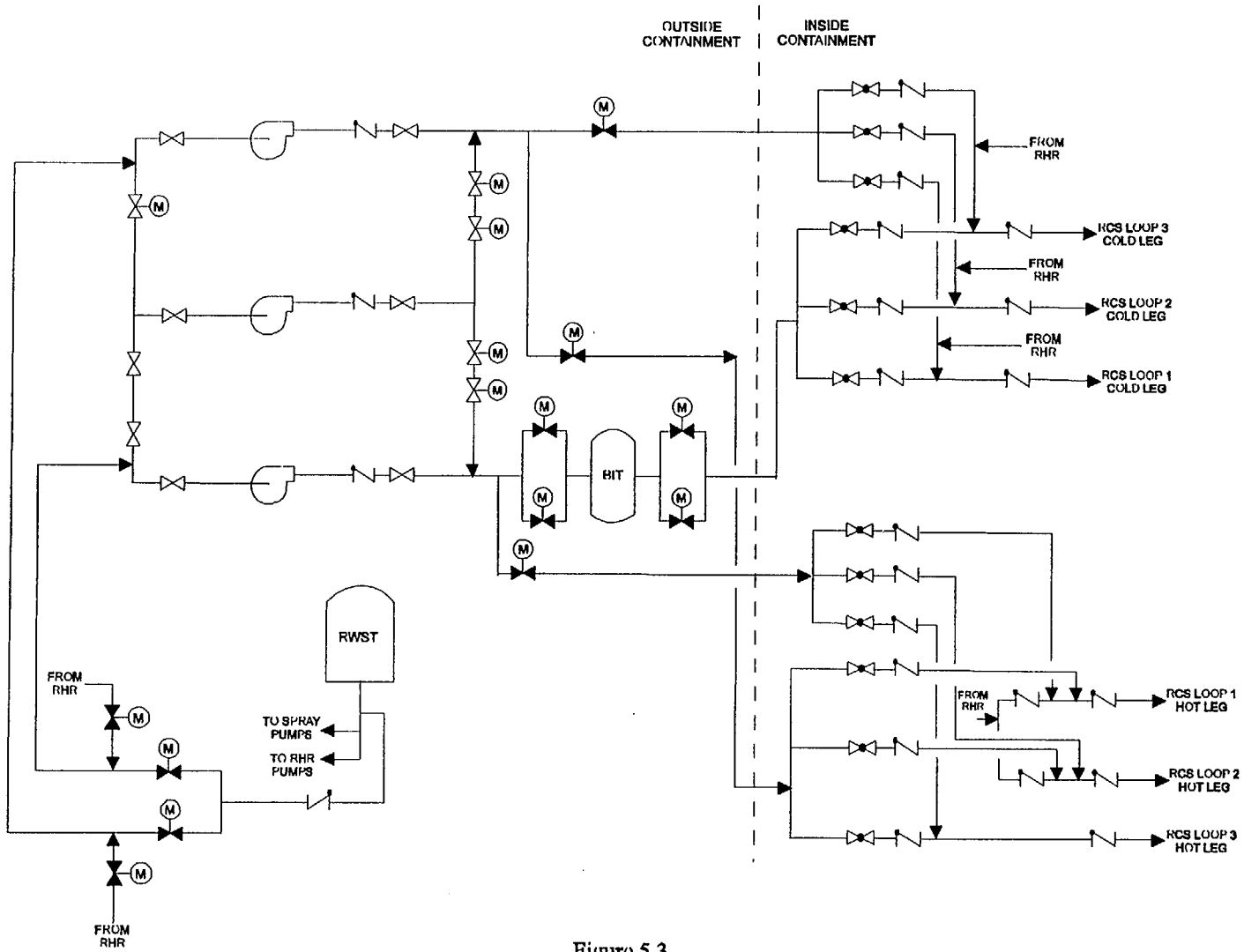

Figure 5.3
High Pressure Safety Injection System
(Example of Reporting Scope)

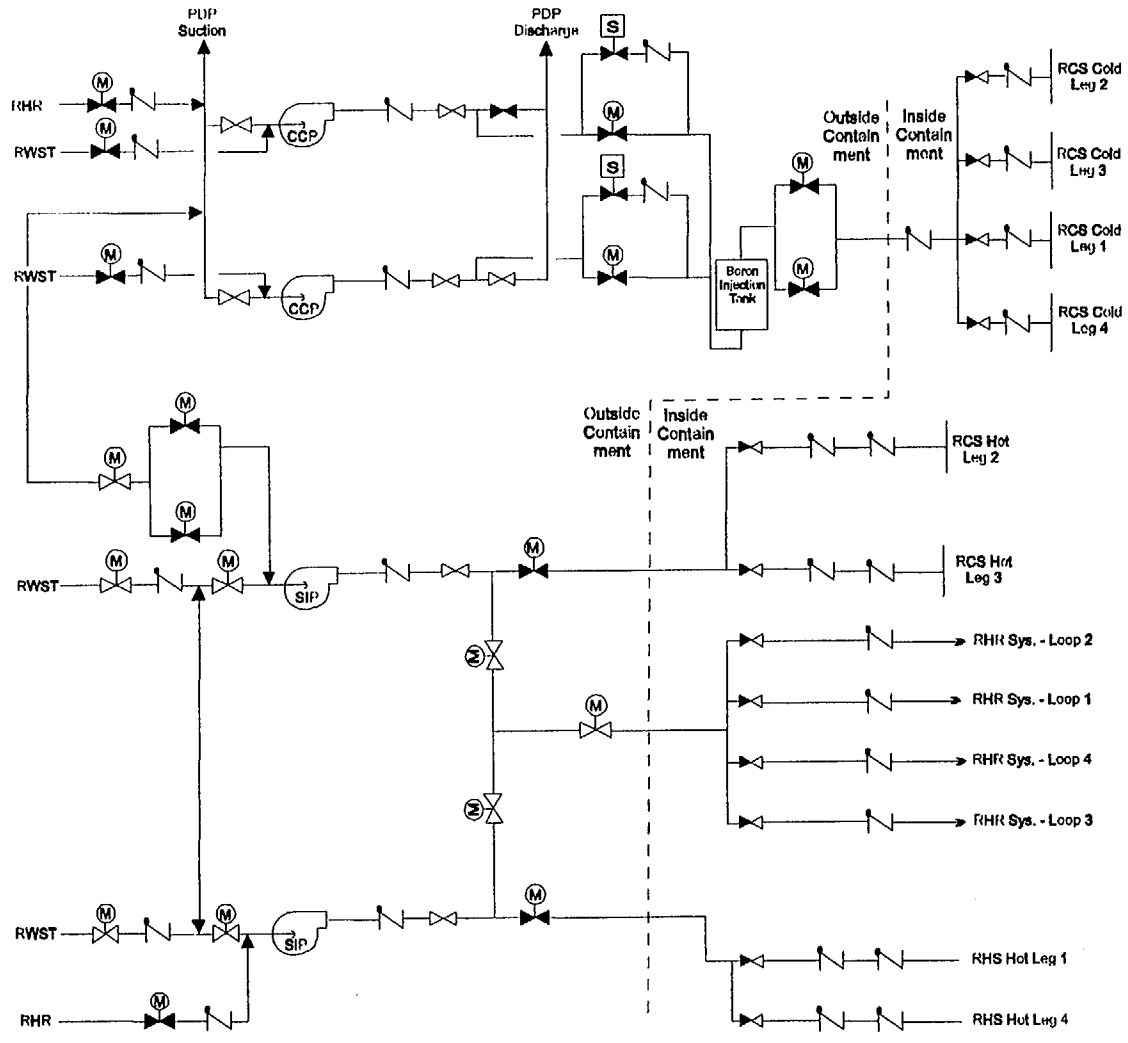

Figure 5.4
High Pressure Safety Injection System
(Example of Reporting Scope)

PWR Auxiliary Feedwater Systems

Definition and Scope

This section provides additional guidance for reporting the performance of PWR auxiliary feedwater (AFW) or emergency feedwater (EFW) systems. The AFW system provides decay heat removal via the steam generators to cool down and depressurize the reactor coolant system following a reactor trip. The AFW system is assumed to be required for an extended period of operation during which the initial supply of water from the condensate storage tank is depleted and water from an alternative water source (e.g., the service water system) is required. Therefore components in the flow paths from both of these water sources are included; however, the alternative water source (e.g., service water system) is not included.

The function monitored for the indicator is:

- the ability of the AFW system to take a suction from the primary water source (typically, the condensate storage tank) or from an emergency source (typically, a lake or river via the service water system) and inject into at least one steam generator at rated flow and pressure.

Some plants have a startup feedwater pump that requires a manual actuation. Startup feedwater pumps are not included in the scope of the AFW system for this indicator.

Figures 6.1 through 6.3 show some typical AFW system configurations, indicating the components for which train unavailability is monitored. Plant-specific design differences may require other components to be included.

Train Determination

The number of trains is determined primarily by the number of parallel pumps in the AFW system, not by the number of injection lines. For example, a system with three AFW pumps is defined as three-train system, whether it feeds two, three, or four injection lines, and regardless of the flow capacity of the pumps.

Figure 6.1 illustrates a three-pump, two-steam generator plant that features redundant flow paths to the steam generators. This system is a three-train system. (If the system had only one motor-driven pump, it would be a two-train system.) The turbine-driven pump train does not share motor-operated isolation valves with the motor-driven pump trains in this design.

Another three-pump, two-steam generator design is shown in Figure 6.2. This is also a three-train system; however, in this design, the isolation and regulating valves in the motor-driven pump trains are also included in the turbine-driven pump train.

A three-pump, four-steam generator design is shown in Figure 6.3. In this design, either motor-driven pump can supply each steam generator through a common header. The turbine-driven pump can supply each steam generator through a separate header. The turbine-driven and motor-

driven pump trains do not share the air-operated regulating valves in this design. This is a three train system. Three-steam generator designs may be arranged similar to Figure 6.3.

Clarifying Notes

Some AFW components, may be included in the scope of more than one train. For example, one set of flow regulating valves and isolation valves in a three-pump, two-steam generator system (as in Figure 6.2) are included in the motor-driven pump train with which they are electrically associated, but they are also included (along with the redundant set of valves) in the turbine-driven pump train. In these instances, the effects of testing or failure of the valves should be reported in both affected trains.

Similarly, when two trains provide flow to a common header, such as in Figure 6.3, the effect of isolation or flow regulating valve failures in paths connected to the header should be considered in both trains.

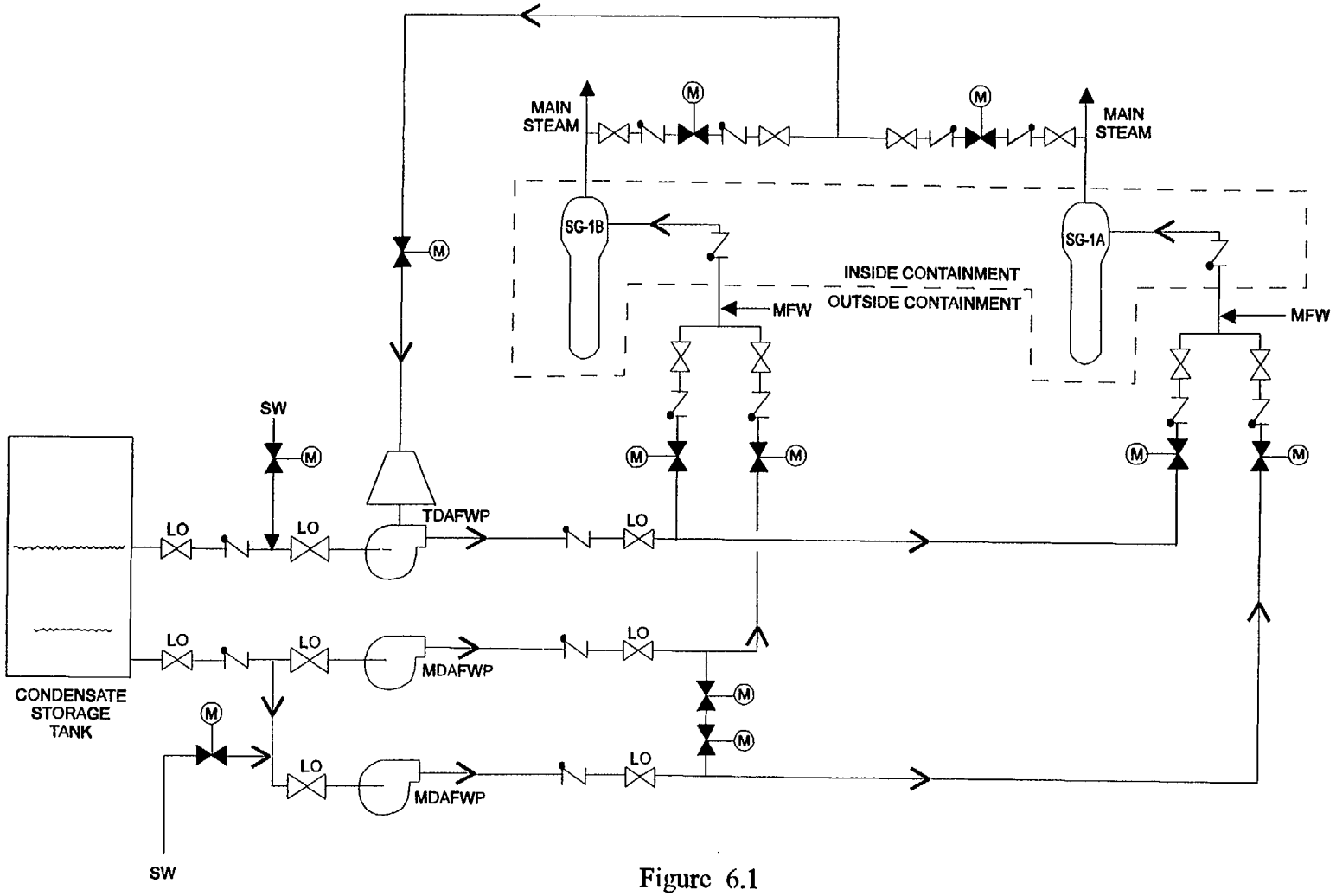

Figure 6.1
Auxiliary Feedwater System
(Example of Reporting Scope)

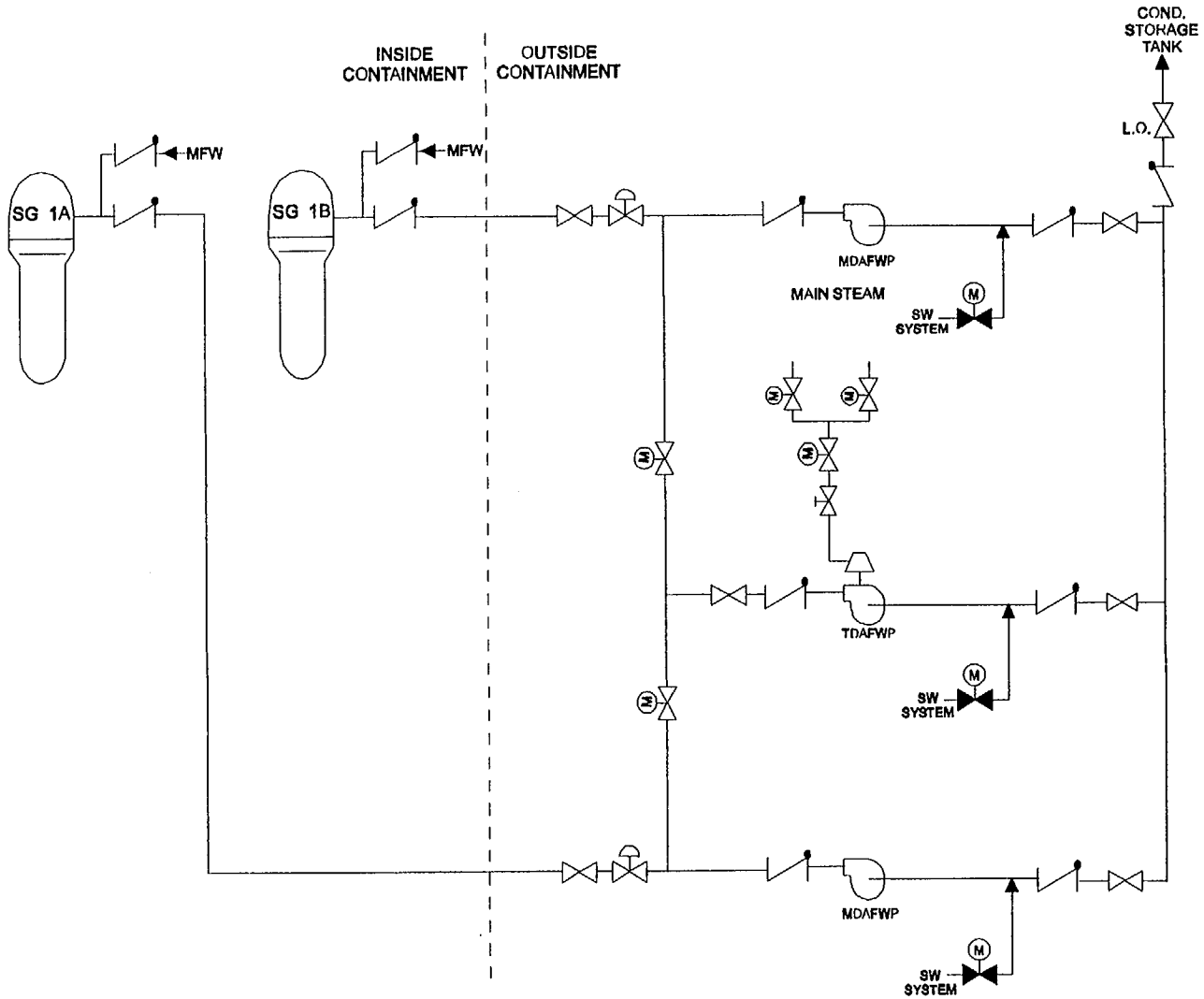

Figure 6.2
Auxiliary Feedwater System
(Example of Reporting Scope)

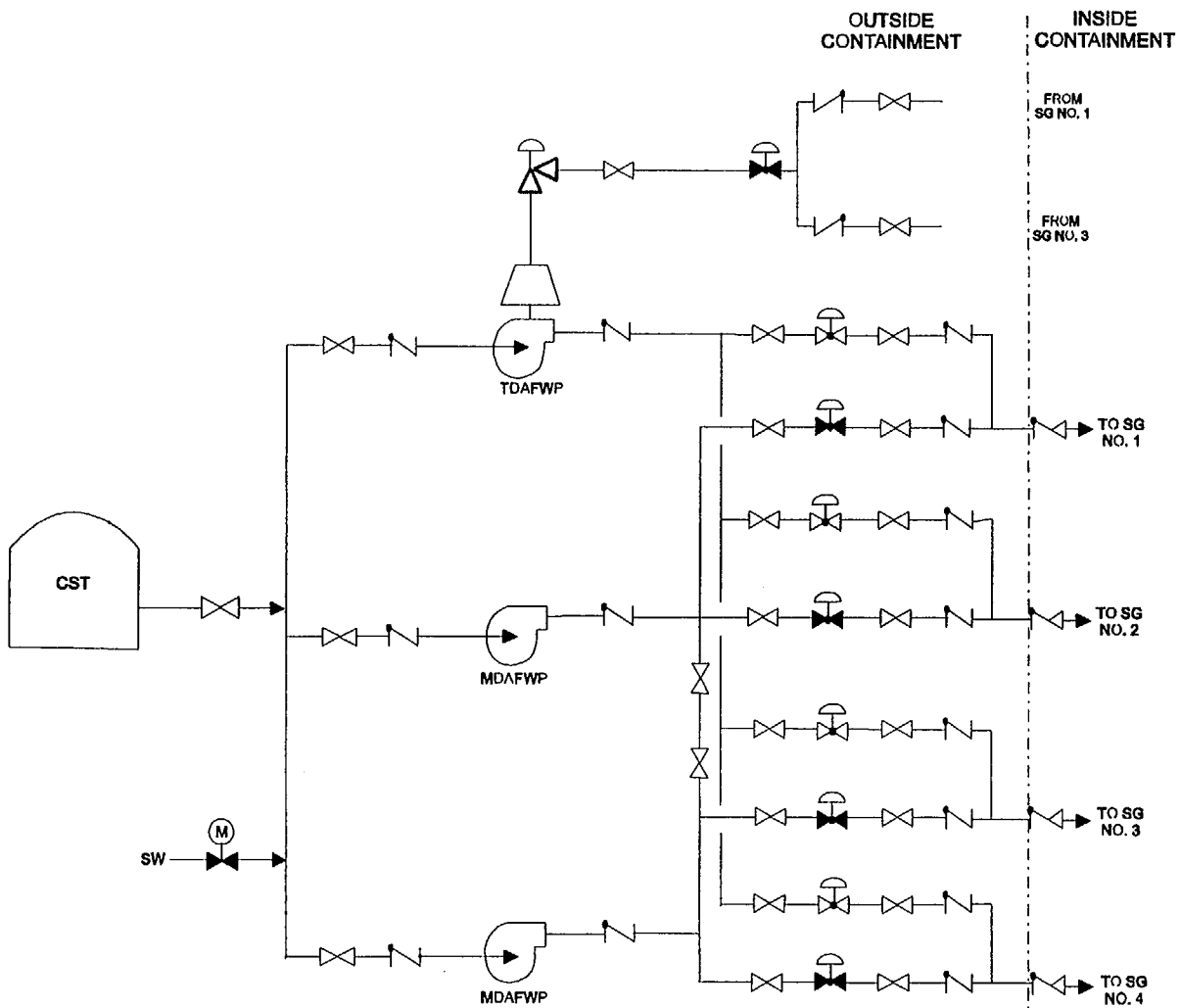

Figure 6.3
Auxiliary Feedwater System
(Example of Reporting Scope)

PWR Residual Heat Removal System

Definition and Scope

This section provides additional guidance for reporting the performance of the PWR residual heat removal (RHR) system for post-accident recirculation and shutdown cooling modes of operation. In the event of a loss of reactor coolant inventory, the post-accident recirculation mode is used to cool and recirculate water from the containment sump following depletion of RWST inventory. The shutdown cooling function is used to remove decay heat from the primary system following any transient requiring normal long-term heat removal from the reactor vessel.

The functions monitored for this indicator are:

- the ability of the RHR system to take a suction from the containment sump, cool the fluid, and inject at low pressure into the RCS, and

- the ability of the RHR system to remove decay heat from the reactor during a normal unit shutdown for refueling or maintenance.

Figures 7.1 and 7.2 show generic schematics with the RHR system in the recirculation and shutdown cooling modes, respectively. The figures indicate the components for which train unavailability is monitored. Plant-specific design differences may require other components to be included.

Train Determination

The number of trains in the RHR system is determined by the number of parallel RHR heat exchangers capable of performing post-accident heat removal or shutdown cooling. The following discussion demonstrates train determination for various generic system designs.

Figure 7.1 and 7.2 illustrate a common RHR system (for post-accident recirculation and shutdown cooling modes) which incorporates two pumps and two heat exchangers arranged so that each heat exchanger can be supplied by one pump. This is a two-train RHR system.

Clarifying Notes

Some components are used to provide more than one function of RHR. If a component cannot perform as designed, rendering its associated train incapable of meeting one or both of the monitored functions, then the train is considered to be failed. Unavailable hours (if the train was required to be available for service) would be reported as a result of the component failure.

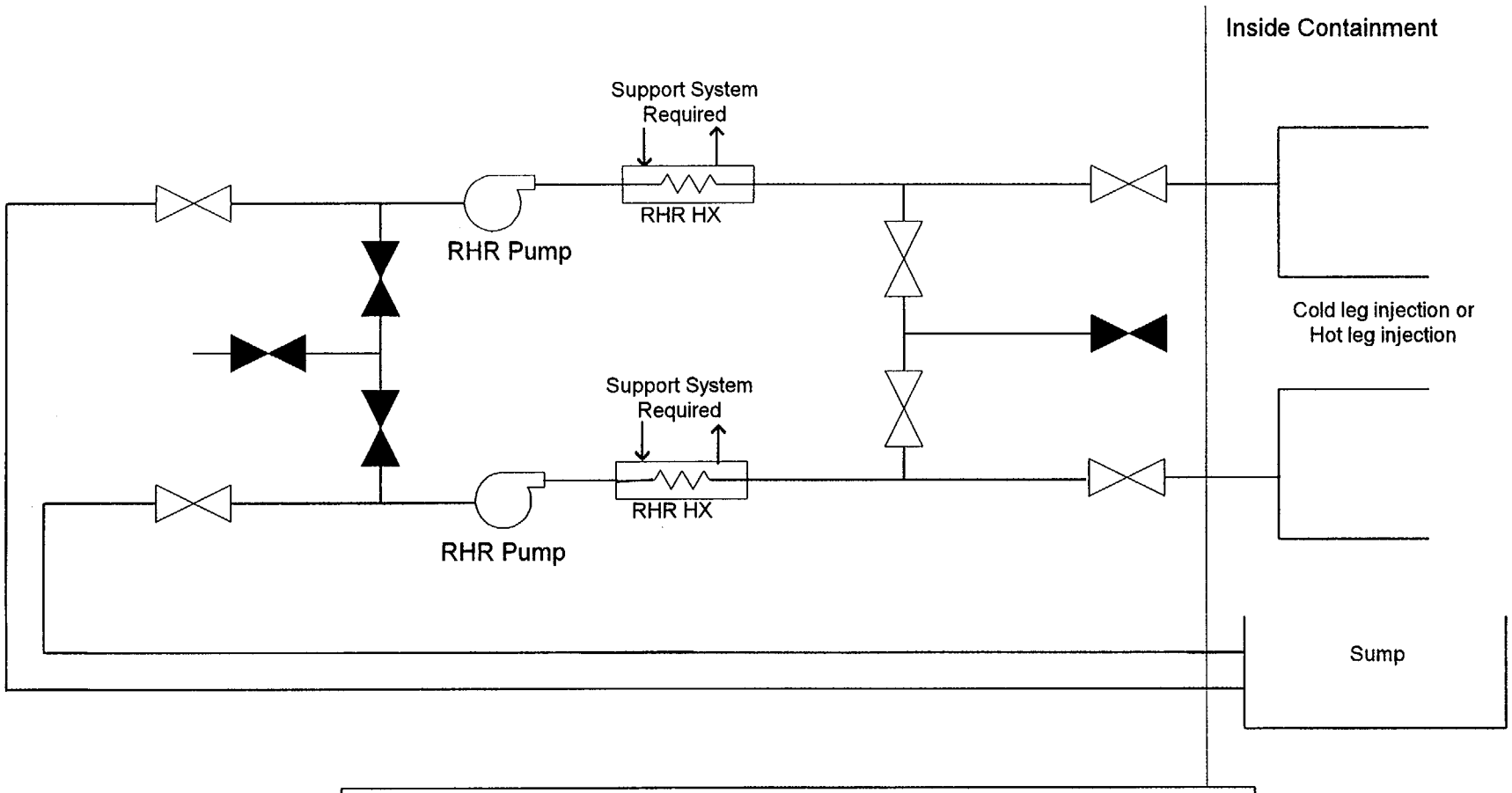

Figure 7.1 – Recirculation Mode – two trains (both source and injection)
Example of reporting Scope, PWR RHR System

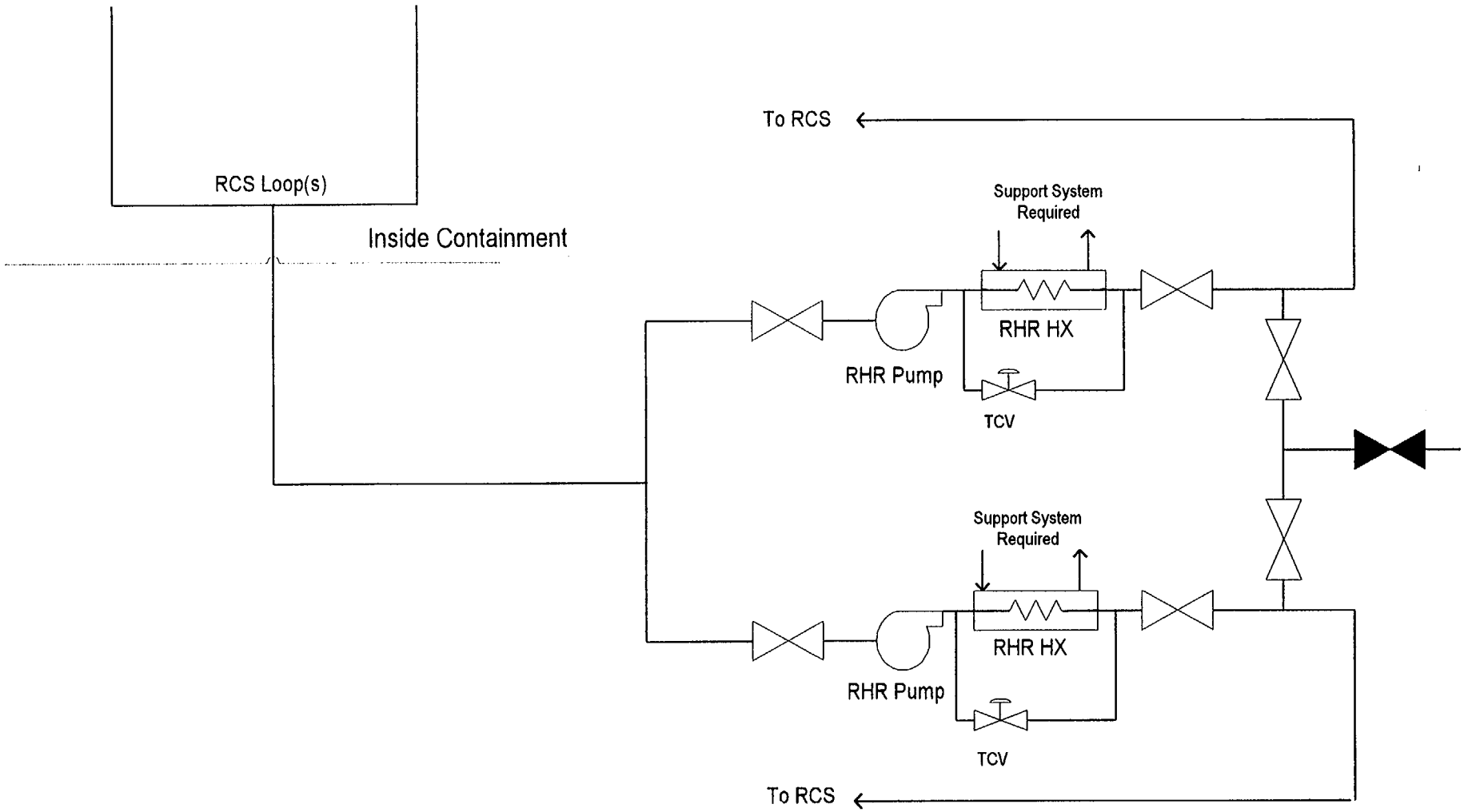

Figure 7.2 Shutdown Cooling Mode
(Example of Reporting Scope, PWR RHR System

SAFETY SYSTEM FUNCTIONAL FAILURES

Purpose

This indicator monitors events or conditions that ~~alone~~ prevented, or could have prevented, the fulfillment of the safety function of structures or systems that are needed to:

(a) Shut down the reactor and maintain it in a safe shutdown condition;
(b) Remove residual heat;
(c) Control the release of radioactive material; or
(d) Mitigate the consequences of an accident.

Indicator Definition

The number of events or conditions that ~~alone~~ prevented, or could have prevented, the fulfillment of the safety function of structures or systems in the previous four quarters.

Data Reporting Elements

The following data is reported for each reactor unit:

- the number of safety system functional failures during the previous quarter

Calculation

unit value = number of safety system functional failures in previous four quarters

Definition of Terms

Safety System Function Failure (SSFF) is any event or condition that ~~alone~~ could have prevented the fulfillment of the safety function of structures or systems that are needed to:

(A) Shut down the reactor and maintain it in a safe shutdown condition;
(B) Remove residual heat;
(C) Control the release of radioactive material; or
(D) Mitigate the consequences of an accident.

The indicator includes a wide variety of events or conditions, ranging from actual failures on demand to potential failures attributable to various causes, including environmental qualification, seismic qualification, human error, design or installation errors, etc. Many SSFFs do not involve actual failures of equipment.

Because the contribution to risk of the structures and systems included in the SSFF varies considerably, and because potential as well as actual failures are included, it is not possible to assign a risk-significance to this indicator. It is intended to be used as a possible precursor to more important equipment problems, until an indicator of safety system performance more directly related to risk can be developed.

Clarifying Notes

The definition of SSFFs is identical to the wording of the current revision to 10 CFR 50.73(a)(2)(v). Because of overlap among various reporting requirements in 10 CFR 50.73, some events or conditions that result in safety system functional failures may be properly reported in accordance with other paragraphs of 10 CFR 50.73, particularly paragraphs (a)(2)(i), (a)(2)(ii), and (a)(2)(vii). An event or condition that meets the requirements for reporting under another paragraph of 10 CFR 50.73 should be evaluated to determine if it also prevented the fulfillment of a safety function. Should this be the case, the requirements of paragraph (a)(2)(v) are also met and the event or condition should be included in the quarterly performance indicator report as an SSFF. The level of judgement for reporting an event or condition under paragraph (a)(2)(v) as an SSFF is a reasonable expectation of preventing the fulfillment of a safety function.

In the past, LERs may not have explicitly identified whether an event or condition was reportable under 10 CFR 50.73(a)(2)(v) (i.e., all pertinent boxes may not have been checked). It is important to ensure that the applicability of 10 CFR 50.73(a)(2)(v) has been explicitly considered for each LER considered for this performance indicator.

NUREG-1022: Unless otherwise specified in this guideline, guidance contained in the latest revision to NUREG-1022, "Event Reporting Guidelines, 10CFR 50.72 and 50.73," that is applicable to reporting under 10 CFR 50.73(a)(2)(v), should be used to assess reportability for this performance indicator.

Planned Evolution for maintenance or surveillance testing: NUREG-1022, Revision ~~1~~ 2, page 56 ~~70~~ states, "The following types of events or conditions generally are not reportable under these criteria:...Removal of a system or part of a system from service as part of a planned evolution for maintenance or surveillance testing..."

The word "planned" is defined as follows:

> "Planned" means the activity is undertaken voluntarily, at the licensee's discretion, and is not required to restore operability or for continued plant operation.

A single event or condition that affects several systems: counts as only one failure.

Multiple occurrences of a system failure: the number of failures to be counted depends upon whether the system was declared operable between occurrences. If the licensee knew that the problem existed, tried to correct it, and considered the system to be operable, but the system was subsequently found to have been inoperable the entire time, multiple failures will be counted whether or not they are reported in the same LER. But if the licensee knew that a potential problem existed and declared the system inoperable, subsequent failures of the system for the same problem would not be counted as long as the system was not declared operable in the interim. Similarly, in situations where the licensee did not realize that a problem existed (and thus could not have intentionally declared the system inoperable or corrected the problem), only one failure is counted.

Additional failures: a failure leading to an evaluation in which additional failures are found is only counted as one failure; new problems found during the evaluation are not counted, even if the

causes or failure modes are different. The intent is to not count additional events when problems are discovered while resolving the original problem.

Engineering analyses: events in which the licensee declared a system inoperable but an engineering analysis later determined that the system was capable of performing its safety function are not counted, even if the system was removed from service to perform the analysis.

Reporting date: the date of the SSFF is the Report Date of the LER.

~~Frequently Asked Questions~~

~~ID~~ ~~Question~~

~~8~~ ~~Does the functional area of Containment Integrity include systems and equipment associated with secondary containment? Specifically, is standby Gas Treatment an included system? If secondary containment is included, do we also include systems like Hi/Lo Volume purge (BWR-6) or Fuel Bldg. Filtration systems for designs that have a separate system for fuel building (a functional equivalent to secondary containment). Would support systems like annulus pressure control be included?~~

~~Response~~

~~Yes, Standby Gas Treatment is included. The reportability guidelines of NUREG-1022 Revision 1, Event Reporting Guidelines, 10 CFR 50.72 and 50.73, should be used. If the situation is reportable per 10CFR50.73 (a)(2)(v) it should be counted as a SSFF. The other systems identified in the question have the potential to be reported under 10 CFR 50.73 (a)(2)(v) and should be evaluated accordingly.~~

~~ID~~ ~~Question~~

~~9~~ ~~Should Appendix R issues be covered by this indicator (SSFF) or is it already covered/better covered by the fire protection inspection procedure.~~

~~Response~~

~~This indicator monitors events or conditions that alone prevented, or could have prevented, the fulfillment of the safety function of structures or systems that are needed to a) shut down the reactor and maintain it in a safe shutdown condition, b) remove residual heat, c) control the release of radioactive material, or d) mitigate the consequences of an accident. Appendix R issues have the potential to affect the safety functions of structures and systems and should be evaluated accordingly. The reportability guidelines of NUREG-1022 Revision 1, should be used. If the situation is reportable per 10CFR50.73 (a)(2)(v) it should be counted as a SSFF.~~

~~ID~~ ~~Question~~

~~10~~ ~~For those cases where a Tech Spec required action places a system in an inoperable status, is it necessary required to call this a SSFF? It seems like it should not be counted as a SSFF because the systems can perform their safety function.~~

~~Response~~

~~If the system, upon receipt of a demand signal, would have functioned, then it would not count as a SSFF. The reportability guidelines of NUREG-1022 Revision 1, Event Reporting Guidelines, 10 CFR 50.72 and 50.73, should be used. If the situation is reportable per 10CFR50.73 (a)(2)(v) it should be counted as a SSFF.~~

~~ID~~	~~Question~~
~~143~~	~~In our plant, RCIC is not a safety system and functionally, it provides high pressure makeup which can also be provided by HPCI. For these reasons, RCIC functional failures (as determined for the maintenance rule) are not reportable under 10CFR50.73 (a)(2)(v). Given the above, would RCIC functional failures ever be reported for NEI 99-02?~~ ~~**Response**~~ ~~No. The intention of NEI 99-02 is to report only those failures meeting the 10CFR50.73(a)(2)(v) reporting criteria as applied to a specific plant.~~

~~ID~~	~~Question~~
~~144~~	~~The guidance on SSFFs regarding reporting of multiple failures could be clearer. Is the intent that if there are multiple failures documented in one LER that each one (failure) be counted by the one report date? So that one report date may be tied to numerous failures?~~ ~~**Response**~~ ~~Each individual SSFF counts.~~

Data Examples

Safety System Functional Failures

Quarter	2Q/98	3Q/98	4Q/98	1Q/98	2Q/98	3Q/98	4Q/98	Prev. Q
SSFF in the previous qtr	1	3	2	1	1	2	0	1
					2Q/98	3Q/98	4Q/98	Prev. Q
Indicator: Number of SSFs over 4 Qtrs					7	6	4	4

Threshold for PWRs	
Green	≤5
White	>5
Yellow	N/A
Red	N/A

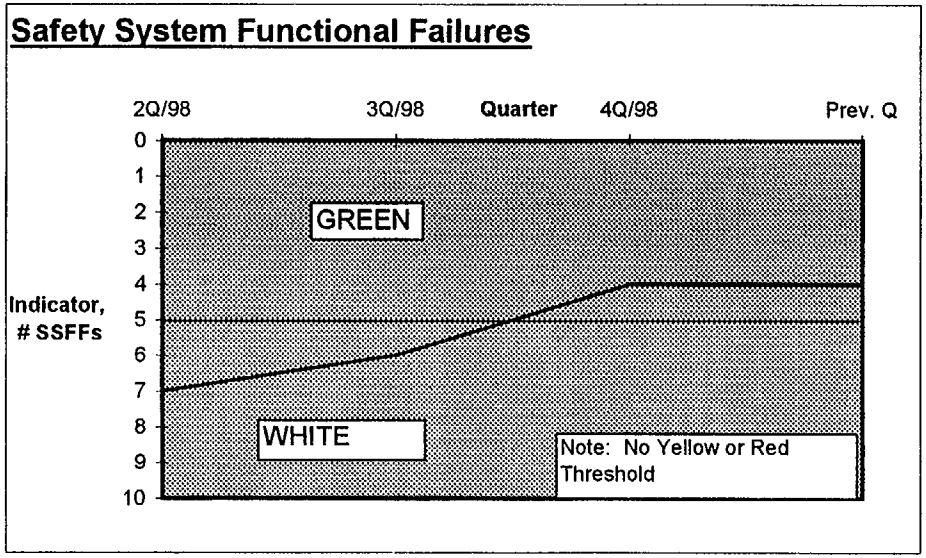

2.3 BARRIER INTEGRITY CORNERSTONE

The purpose of this cornerstone is to provide reasonable assurance that the physical design barriers (fuel cladding, reactor coolant system, and containment) protect the public from radionuclide releases caused by accidents or events. These barriers are an important element in meeting the NRC mission of assuring adequate protection of public health and safety. The performance indicators assist in monitoring the functionality of the fuel cladding and the reactor coolant system. There is currently no performance indicator for the containment barrier. The performance of this barrier is assured through the inspection program.

There are two performance indicators for this cornerstone:

- Reactor Coolant System (RCS) Specific Activity
- RCS Identified Leak Rate

REACTOR COOLANT SYSTEM (RCS) SPECIFIC ACTIVITY

Purpose

This indicator monitors the integrity of the fuel cladding, the first of the three barriers to prevent the release of fission products. It measures the radioactivity in the RCS as an indication of functionality of the cladding.

Indicator Definition

The maximum monthly RCS activity in micro-Curies per gram (μCi/gm) dose equivalent Iodine-131 per the technical specifications, and expressed as a percentage of the technical specification limit. Those plants whose technical specifications are based on micro-curies per gram (μCi/gm total Iodine should use that measurement.

Data Reporting Elements

The following data are reported for each reactor unit:

- maximum calculated RCS activity for each unit, in micro-Curies per gram dose equivalent Iodine-131, as required by technical specifications at steady state power, for each month during the previous quarter (three values are reported).

- Technical Specification limit

Calculation

The indicator is calculated as follows:

$$\text{unit value} = \frac{\text{the maximum monthly value of calculated activity}}{\text{Technical Specification limit}} \times 100$$

Definitions of Terms

(Blank)

Clarifying Notes

This indicator is recorded monthly and reported quarterly.

The indicator is calculated using the same methodology, assumptions and conditions as for the Technical Specification calculation.

Unless otherwise defined by the licensee, steady state is defined as continuous operation for at least three days at a power level that does not vary more than ±5 percent.

This indicator monitors the steady state integrity of the fuel-cladding barrier at power. Transient spikes in RCS Specific Activity following power changes, shutdowns and scrams may not provide a reliable indication of cladding integrity and should not be included in the monthly maximum for this indicator.

Samples taken using technical specification methodology when shutdown are not reported. However, samples taken using the technical specification methodology at steady state power more frequently than required are to be reported.

If in the entire month, plant conditions do not require RCS activity to be calculated, the quarterly report is noted as N/A for that month. (A value of N/A is reported).

Licensees should use the most restrictive regulatory limit (e.g., technical specifications (TS) or license condition). However, if the most restrictive regulatory limit is insufficient to assure plant safety, then NRC Administrative Letter 98-10 applies, which states that imposition of administrative controls is an acceptable short-term corrective action. When an administrative control is in place as temporary measure to ensure that TS limits are met and to ensure public health and safety, that administrative limit should be used for this PI.

~~Frequently Asked Questions~~

~~ID~~	~~Question~~
~~22~~	~~The Reactor Coolant System Specific Activity performance indicator is based upon a measurement of RCS activity in micro Curies per gram dose equivalent Iodine 131. Our plant's measurement and associated technical specification are based upon micro curies per gram total Iodine. What do we report for this performance indicator.~~

~~Response~~
~~RCS activity for this indicator is expressed as a percentage of the technical specification limit. The maximum monthly RCS activity and your technical specification limit should be reported on a common basis. In your case RCS activity and the technical specification limit should be reported in micro-Curies per gram total Iodine.~~

1

~~ID~~ ~~Question~~
~~23~~ ~~Technical Specifications (TS) provide a frequency of reactor coolant sampling and analysis. If sampling and analysis is conducted on a more frequent basis, do you only report the analysis conducted at the TS frequency, or do you consider all the analyzed samples.~~

~~Response~~
~~All analyzed samples obtained during steady state power operation should be considered in reporting the monthly maximum.~~

2

~~ID~~ ~~Question~~
~~24~~ ~~Are RCS sample results determined during shutdowns, using the technical specification methodology, required to be reported even if the plant is in a mode that does not require the sample. Administratively, the plant may be in a plant condition that requires the sample and analysis, although it is not required by Technical Specifications.~~
~~Response~~
~~No.~~

3

~~ID~~ ~~Question~~
~~25~~ ~~PWRs can expect RCS Specific Activity spikes following routine shutdowns. Are these spikes to be counted as the monthly maximum?~~
~~Response~~
~~The indicator definition refers to the Technical Specifications' maximum monthly activity limit. The basis for this indicator is to monitor steady state power operations. Therefore, do not count short periods of non steady state or non power operation because they may not equate to the current condition of the fuel cladding.~~

4

~~ID~~ ~~Question~~
~~72~~ ~~Application of Technical Specification Limit~~
~~Two of the performance indicators for the barrier integrity cornerstone use "technical specification limit" in the calculation. They are RCS specific activity and leakage. There are two situations where a plant could be operating with a more restrictive limit for RCS specific activity and/or RCS leakage than the "technical specification limit". One situation is where the Facility Operating License (FOL) contains a condition that specifies a more restrictive limit. The second situation is where the licensee has administratively implemented a more restrictive limit to maintain operability as described in Generic Letter 91-18. The guidance as currently worded would always use whatever the technical specification limit is and ignore any more restrictive limits. Is that the intent and is that appropriate?~~
~~Response~~
~~The circumstances of each situation are different and should be identified to the NRC so that a determination can be made as to whether alternate data reporting can be used in place of the data called for in the guidance.~~

5

~~ID~~ ~~Question~~

~~84~~ ~~Reporting significant digits~~

~~How many significant digits should be carried for the dose equivalent I-131 maximum value? Although NEI 99-02, has guidance concerning the number of decimal places in the final reported number (percentage of TS limits), it isn't clear how many significant digits to retain in the raw data.~~

~~**Response**~~

~~In general, the data element input forms allow data to be entered to a level of significance that is one significant figure greater than the resulting performance indicator. In some cases the input forms restrict the level of significance even further due to recognized limitations in reporting accuracy (e.g., compensatory hours are limited to two significant figures even though the PI calculation would allow input to four significant figures). In all cases, however, the accuracy of the raw data should be considered.~~

1

Data Examples

Reactor Coolant System Activity (RCSA)

	4/98	5/98	6/98	7/98	8/98	9/98	10/98	11/98	12/98	1/99	2/99	Prev. mth
Indicator, % of T.S. Limit	10	20	5	4	0.5	2	20	50	60	40	30	10
Max Activity µCi/gm I-131 Equivale	0.1	0.2	0.05	0.04	0.005	0.02	0.2	0.5	0.6	0.4	0.3	0.1
T.S Limit	1	1	1	1	1	1	1	1	1	1	1	1
Thresholds	Green	≤ 50% T.S. limit										
	White	> 50% T.S limit										
	Yellow	>100% T.S. limit										

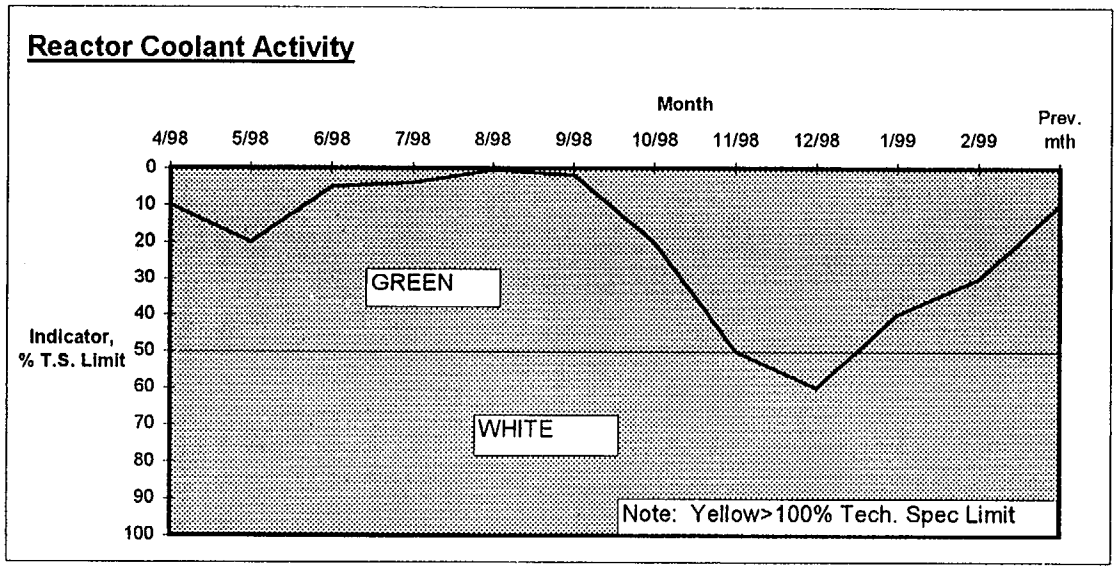

REACTOR COOLANT SYSTEM LEAKAGE

Purpose

This indicator monitors the integrity of the RCS pressure boundary, the second of the three barriers to prevent the release of fission products. It measures RCS Identified Leakage as a percentage of the technical specification allowable Identified Leakage to provide an indication of RCS integrity.

Indicator Definition

The maximum RCS Identified Leakage in gallons per minute each month per the technical specifications and expressed as a percentage of the technical specification limit.

Data Reporting Elements

The following data are required to be reported each quarter:

- The maximum RCS Identified Leakage calculation for each month of the previous quarter (three values).
- Technical Specification limit

Calculation

The unit value for this indicator is calculated as follows:

$$\text{unit value} = \frac{\text{the maximum monthly value of identified leakage}}{\text{Technical Specification limiting value}} \times 100$$

Definition of Terms

RCS Identified Leakage as defined in Technical Specifications.

Clarifying Notes

This indicator is recorded monthly and reported quarterly.

Normal steam generator tube leakage is included in the unit value calculation if required by the plant's Technical Specification definition of RCS identified leakage.

For those plants that do not have a Technical Specification limit on Identified Leakage, substitute RCS Total Leakage in the Data Reporting Elements.

Only ~~All~~ calculations of RCS leakage that are computed in accordance with the calculational methodology requirements of the Technical Specifications are counted in this indicator.

If in the entire month, plant conditions do not require RCS leakage to be calculated, the quarterly report is noted as N/A for that month. (A value of N/A is reported).

1
2 ~~Frequently Asked Questions~~

~~ID~~ ~~Question~~
~~79~~ ~~Use of Total Leakage Value~~
~~We have implemented ITS and have TS definitions for Reactor Coolant leakage. We have a defined limit for "Total Leakage" (25 gpm) and "Un-identified Leakage" (5 gpm). We do not have a specified limit for "Identified Leakage". You can infer directly from our TS limits an identified leakage limit of no more than 20 gpm (25 gpm total minus 5 gpm the amount of leakage we call "unidentified leakage"). Using this approach, the Tech Spec limit for the PI could vary between 25 and 20 gpm depending on the amount of "un-identified leakage" we have. Why can't we use the 20-25 gpm as the limit for the PI as can others who do not have a total leakage TS limit? The best indicator of barrier performance seems to be "Un-identified Leakage" rather than identified leakage. Unidentified is the amount of leakage falling outside designed collection systems. Trending the percentage of "Un-identified Leakage" presents a more clear picture of how well a plant is maintaining their Reactor Coolant system. It is also very well defined. It also seems to meet the SECY objective to be an indication of the "probability of more catastrophic failure potential" as specified in para C.4.5. Why is this PI concerned with identified and not Unidentified leakage?~~

~~Response~~
~~NEI 99-02 states that total leakage will be used for those plants that do not have a Technical Specification limit on Identified Leakage. This is considered acceptable to provide consistency in reporting for those plants. Not all plants track total leakage. Identified leakage was chosen as capturing most of the allowed leakage.~~

3
4

~~ID~~ ~~Question~~
~~135~~ ~~Our Tech Spec requires test/evaluation of primary system leakage 5 times per week. The Tech Spec limits (LCOs) are 1 gpm unidentified and 10 gpm Total. The Reactor Operators perform a daily calculation of RCS leakage based on mass flow differences, which is equivalent to Total leakage from the RCS. The unidentified RCS leak rate is also determined daily based on the daily total but using a weekly calculated Identified leak rate and subtracting it from the daily total leak rate. Based on the NEI 99-02 guideline, we would use the weekly calculated identified leak rate? Is this correct? This leak rate is sometimes calculated more frequently due to increases in leakage during the week. Many times the identified leak rate is zero. We can look at a months worth of calculations (usually 4) and see which one is the highest and report that. Is that the intent of the PI?~~

~~Response~~
~~Report the highest monthly value computed in accordance with the calculational methodology requirements of the Technical Specifications.~~

5
6

1 **Data Examples**

Reactor Coolant System Identified Leakage (RCSL)

	4/98	5/98	6/98	7/98	8/98	9/98	10/98	11/98	12/98	1/99	2/99	Prev. mth
Indicator %T.S. Value	60	40	10	70	50	60	40	30	30	20	20	20
Identified Leakage (gpm)	6	4	1	7	5	6	4	3	3	2	2	2
TS Value (gpm)	10	10	10	10	10	10	10	10	10	10	10	10
Threshold												
Green	≤50% TS limit											
White	>50% TS limit											
Yellow	>100%TS limit											
Data collected monthly, reported quarterly												

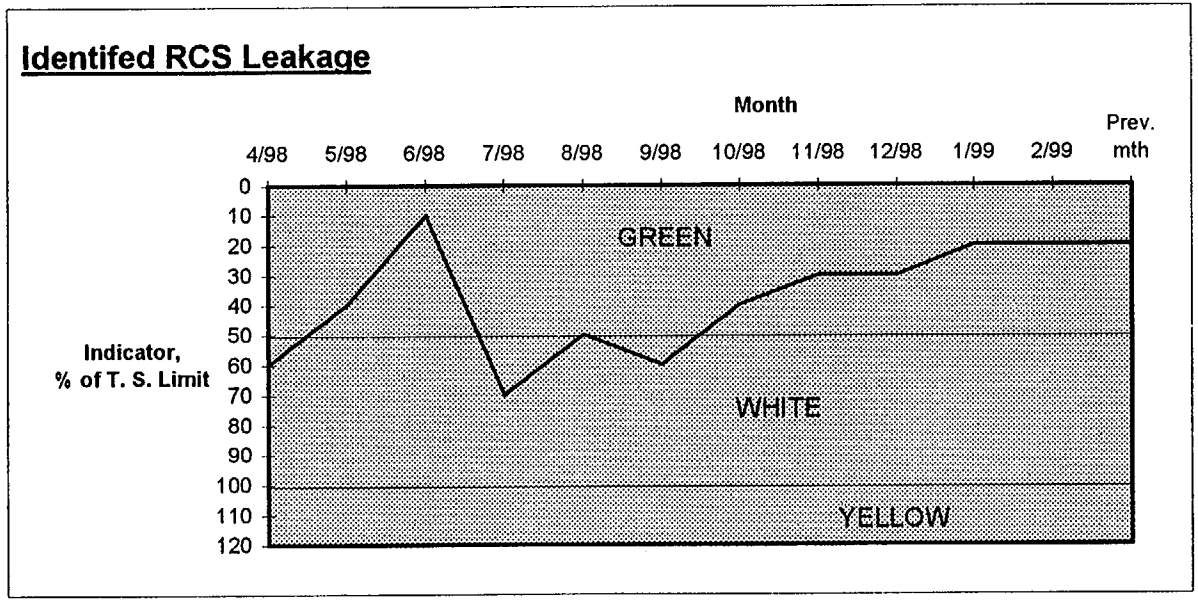

2

2.4 EMERGENCY PREPAREDNESS CORNERSTONE

The objective of this cornerstone is to ensure that the licensee is capable of implementing adequate measures to protect the public health and safety during a radiological emergency. Licensees ~~routinely assess and refine their emergency plans~~maintain this capability through Emergency Response Organization (ERO) participation in drills, exercises, actual events, training, and subsequent problem identification and resolution. ~~Employees are trained to ensure that the plan can be effectively implemented during an emergency. Drill and exercise performance, ERO drill participation and reliability of the alert and notification system contribute to reasonable assurance that the licensee has an effective emergency preparedness program.~~ The Emergency Preparedness performance indicators provide a quantitative indication of the licensee's ability to implement adequate measures to protect the public health and safety. These performance indicators create a licensee response band that allows NRC oversight of Emergency Preparedness programs through a baseline inspection program. These performance indicators measure onsite Emergency Preparedness programs. Offsite programs are evaluated by FEMA.

The protection of public health and safety is assured by a defense in depth philosophy that relies on: safe reactor design and operation, the operation of mitigation features and systems, a multi-layered barrier system to prevent fission product release, and emergency preparedness.

The Emergency Preparedness cornerstone ~~onsite~~ performance indicators ~~monitored by this section~~ are:

- Drill/Exercise performance (DEP),
- Emergency Response Organization Drill Participation (ERO),
- Alert and Notification System Reliability (ANS)

DRILL/EXERCISE PERFORMANCE

Purpose

This indicator monitors timely and accurate licensee performance in drills and exercises when presented with opportunities for classification of emergencies, notification of offsite authorities, and development of protective action recommendations (PARs). It is the ratio, in percent, of timely and accurate performance of those actions to total opportunities.

Indicator Definition

The percentage of all drill, exercise, and actual opportunities that were performed timely and accurately during the previous eight quarters.

Data Reporting Elements

The following data are required to calculate this indicator:

- the number of drill, exercise, and actual event opportunities during the previous quarter.

- the number of drill, exercise, and actual event opportunities performed timely and accurately during the previous quarter.

The indicator is calculated and reported quarterly. (See clarifying notes)

Calculation

The site average values for this indicator are calculated as follows:

$$\left[\frac{\text{\# of timely \& accurate classifications, notifications, \& PARs from DE \& AEs * during the previous 8 quarters}}{\text{The total opportunities to perform classifications, notifications \& PARs during the previous 8 quarters}}\right] \times 100$$

*DE & AEs = Drills, Exercises, and Actual Events

Definition of Terms

Opportunities should include multiple events during a single drill or exercise (if supported by the scenario) or actual event, as follows:

- each expected classification or upgrade in classification ~~should be included~~
- each initial notification of an emergency class declaration
- each initial notification of PARs or change to PARs
- each PAR developed
- ~~Notification includes notifications made to the state and/or local government authorities for initial emergency classification, upgrade of emergency class, initial PARs and changes in PARs (periodic follow up notifications and briefings when the classification or PARs have not changed are not included)~~
- ~~PAR includes the initial PAR and any PAR change~~

Timely means:

- classifications are made consistent with the goal of 15 minutes once available plant parameters reach an Emergency Action Level (EAL)
- PARs are ~~developed~~ made consistent with~~in~~ the goal of 15 minutes once data is available ~~of data availability.~~
- offsite notifications are initiated ~~(verbal contact)~~ within 15 minutes of event classification and/or PAR development (see clarifying notes)

Accurate means:

- ~~notification, classification~~Classification~~,~~ and PAR appropriate to the event as specified by the approved plan and implementing procedures (see clarifying notes)~~.~~
  - Initial notification form completed appropriate to the event to include (see clarifying notes):
    - Class of emergency
    - EAL number
    - Description of emergency
    - Wind direction and speed

- Whether offsite protective measures are necessary
- Potentially affected population and areas
- Whether a release is taking place
- Date and time of declaration of emergency
- Whether the event is a drill or actual event
- Plant and/or unit as applicable

Clarifying Notes

While actual event opportunities are included in the performance indicator data ~~reporting~~, the NRC will also inspect licensee response to all actual events.

As a minimum, actual emergency declarations and evaluated exercises are to be included in this indicator. In addition, other simulated emergency events that the licensee formally assesses for performance of classification, notification or PAR development ~~opportunities will~~may be included in this indicator (opportunities cannot be removed from the indicator due to poor performance).

The following information provides additional clarification of the accuracy requirements described above:

- It is understood that initial notification forms are negotiated with offsite authorities. If the approved form does not include these elements, they need not be added. Alternately, if the form includes elements in addition to these, those elements need not be assessed for accuracy when determining the DEP PI. It is, however, expected that errors in such additional elements would be critiqued and addressed through the corrective action system.

- The description of the event causing the classification may be brief and need not include all plant conditions. At some sites, the EAL number is the description.

- "Release" means a radiological release attributable to the emergency event.

- Minor discrepancies in the windspeed and direction provided on the emergency notification form need not count as a missed notification opportunity provided the discrepancy does not result in an incorrect PAR being provided.

The licensee shall ~~should~~ identify, in advance, drills, exercises and other performance enhancing experiences in which ~~DEP~~ opportunities will be formally assessed, and be ~~. This can be done by memo, but must be~~ available for NRC review. The licensee has the latitude to include opportunities in the PI statistics as long as the drill (in whatever form) simulates the appropriate level of inter-facility interaction. The criteria for suitable drills/performance enhancing experiences are provided under the ERO Drill Participation PI clarifying notes.

~~A drill does not have to include all ERO facilities to be counted in this indicator. A drill is of appropriate scope for a single ERO specific facility if it reasonably simulates the interaction with one or more of the following facilities, as appropriate:~~

~~the control room,~~
~~the Technical Support Center (TSC),~~
~~the Operations Support Center,~~
~~the Emergency Operations Facility (EOF),~~
~~field monitoring teams,~~
~~damage control teams, and~~
~~offsite governmental authorities.~~

Performance statistics from o~~O~~perating shift simulator training evaluations may be included in this indicator only when the scope requires classification. Classification, PAR n~~N~~otifications and PARs may be included in this indicator if they are performed to the point of filling out the appropriate forms and demonstrating sufficient knowledge to perform the actual notification. However, there is no intent to disrupt ongoing operator qualification programs. Appropriate operator training evolutions should be included in the indicator only when E~~e~~mergency P~~p~~reparedness aspects are consistent with training goals.

Some licensees have specific arrangements with their State authorities that provide for different notification requirements than those prescribed by the performance indicator, e.g., within one hour, not 15 minutes. In these instances the licensee should determine success against the specific state requirements.

For sites with multiple agencies to notify, the notification is considered to be initiated when contact is made with the first agency to transmit the initial notification information.

Simulation of notification to offsite agencies is allowed. It is not expected that State/local agencies be available to support all drills conducted by licensees. The drill should reasonably simulate the contact and the participants should demonstrate their ability to use the equipment.

Classification is expected to be made promptly following indication that the conditions have reached an emergency threshold in accordance with the licensee's EAL scheme. With respect to classification of emergencies, the 15 minute goal is a reasonable period of time for assessing and classifying an emergency once indications are available to control room operators that an EAL has been exceeded. Allowing a delay in classifying an emergency up to 15 minutes will have minimal impact upon the overall emergency response to protect the public health and safety. The 15-minute goal should not be interpreted as providing a grace period in which a licensee may attempt to restore plant conditions and avoid classifying the emergency.

If an event has occurred that resulted in an emergency classification where no EAL was exceeded, the incorrect classification should be considered a missed opportunity. The subsequent notification should be considered an opportunity and evaluated on its own merits.

During drill performance, the ERO may not always classify an event exactly the way that the scenario specifies. This could be due to conservative decision making, Emergency Director judgment call, or a simulator driven scenario that has the potential for multiple 'forks'. Situations can arise in which assessment of classification opportunities is subjective due to deviation from the expected scenario path. In such cases, evaluators should document the rationale supporting their decision for eventual NRC inspection. Evaluators must determine if the classification was appropriate to the event as presented to the participants and in accordance with the approved

emergency plan and implementing procedures.

If the expected classification level is missed because an EAL is not recognized within 15 minutes of availability, but a subsequent EAL for the same classification level is subsequently recognized, the subsequent classification is not an opportunity for DEP statistics. The reason that the classification is not an opportunity is that the appropriate classification level was not attained in a timely manner.

Failure to appropriately classify an event counts as only one failure. This is because notification of the classification, development of any PARs and PAR notification are subsequent actions to classification.

The notification associated with a PAR is counted separately; e. g., an event triggering a GE classification would represent a total of 4 opportunities: 1 for classification of the GE, 1 for notification of the GE to the State and/or local government authorities, 1 for development of a PAR and 1 for notification of the PAR.

If PARs at the SAE are in the site Emergency Plan they could be counted as opportunities. However, this would only be appropriate where assessment and decision making is involved in development of the PAR. Automatic PARs with little or no assessment required would not be an appropriate contributor to the PI. PARs limited to livestock or crops and no PAR necessary decisions are also not appropriate.

Dose assessment and PAR development are expected to be made promptly following indications that the conditions have reached a threshold in accordance with the licensee's PAR scheme. The 15 minute goal from data availability is a reasonable period of time to develop or expand a PAR. Plant conditions, meteorological data, field monitoring data, and/or radiation monitor data should provide sufficient information to determine the need to change PARs. If radiation monitor readings provide sufficient data for assessments, it is not appropriate to wait for field monitoring to become available to confirm the need to expand the PAR. The 15 minute goal should not be interpreted as providing a grace period in which the licensee may attempt to restore conditions and avoid making the PAR recommendation.

If a licensee discovers after the fact (greater than 15 minutes) that an event or condition had existed which exceeded an EAL, but no emergency had been declared and the EAL is no longer exceeded at the time of discovery, the following applies:

- If the indication of the event was not available to the operator, the event should not be evaluated for PI purposes.
- If the indication of the event was available to the operator but not recognized, it should be considered an unsuccessful classification opportunity.
- In either case described above, notification should be performed in accordance with NUREG-1022 and not be evaluated as notification opportunities.

~~Frequently Asked Questions~~

~~ID~~ ~~Question~~

~~26~~ ~~Opportunities~~
~~How many opportunities per year for evaluating the performance of the Control Room crews are typically available?~~

~~**Response**~~
~~This will vary depending on the design and structure of the operator training program and the size of the staff. For example, at a single unit plant with 5 operating crews, there are usually about 8 simulator training cycles. Ostensibly, any of these cycles could include opportunities. For estimation purposes, it was assumed that two cycles per year contain a classification and notification opportunity, which results in a total of 20 per year. Additional opportunities could be presented in other parts of the drill/exercise program.~~

1

~~ID~~ ~~**Question**~~
~~27~~ ~~Opportunities~~
~~Does a tabletop drill count for opportunities?~~

~~**Response**~~
~~The definition of table-top drill is not clear. However, the licensee has the latitude to include opportunities in the PI as long as the drill (in whatever form) simulates the appropriate level of inter-facility interaction as described in NEI 99-02. Once identified, opportunities cannot be removed from the indicator due to poor performance.~~

2

~~ID~~ ~~**Question**~~
~~28~~ ~~Opportunities~~
~~For an actual event there may be many non-emergency events that require evaluation against the EALs. If this evaluation does not result in a classification, does the actual event count as an opportunity?~~

~~**Response**~~
~~No it doesn't count as an opportunity. Opportunities begin when a classification is made.~~

3

~~ID~~ ~~**Question**~~
~~29~~ ~~Opportunities~~
~~How do you count opportunities for PARs and notifications associated with PARs?~~

~~**Response**~~
~~The development of an initial PAR and any changes to the PAR (usually no more than one or two follow-up changes due to wind shift or dose assessment) are to be counted. The notification associated with the PAR is counted separately: e. g., an event triggering a GE classification would represent a total of 4 opportunities: 1 for classification of the GE, 1 for notification of the GE to the State and/or local government authorities, 1 for development of a PAR and 1 for notification of the PAR. NEI 99-02 defines the term Opportunity.~~

4

~~ID~~ ~~**Question**~~
~~30~~ ~~Opportunities~~
~~Could it be implied that for each classification opportunity, there may be several associated notification opportunities due to the need to notify several different State/local authorities?~~
~~**Response**~~
~~For each classification opportunity, there is only one associated notification opportunity even if several different State/local authorities need to be notified.~~

1

~~ID~~ ~~Question~~

~~31~~ ~~Evaluation~~

~~Would the evaluators for drills or exercises have to be trained in order to assess opportunities correctly?~~

~~Response~~

~~Qualifications or required training for drill/exercise evaluators was not specified because this has not been a problem. There is a good history of competent exercise evaluation by licensees. However, it would be expected that evaluators be knowledgeable of the performance area they evaluate and with the guidance of NEI 99-02 regarding the EP cornerstone.~~

2

~~ID~~ ~~Question~~

~~32~~ ~~Drills/Exercises~~

~~Why is there not a specified number of facility type drills? a utility could do 60 simulator drills and no EOF drills~~

~~Response~~

~~This concern is addressed through the Emergency Response Organization Drill Participation (ERO) PI, which would show decreasing performance should a licensee go down this path.~~

3

~~ID~~ ~~Question~~

~~33~~ ~~Drills/Exercises~~

~~How does this performance indicator evaluate the difficulty of the drill/exercise?~~

~~Response~~

~~In general, PI's are a summary indication of the status of a program element. They are not used to evaluate the details of performance, rather they indicate the need to evaluate the details of performance. This PI was not designed to quantify the difficulty of scenarios. However, NRC inspectors will observe drills and the biennial exercise. If scenarios are inadequate to test the emergency plan, regulatory action may be taken in accordance with Appendix E to 10 CFR 50, Section IVF.f.~~

4

~~ID~~ ~~Question~~

~~34~~ ~~Evaluation~~

~~If the ERO fails to identify a GE, does this count as 4 failures: one for the classification, one for the notification of the GE, one for the notification of the PARs and one for the PARs?~~

Response

~~It will only count as one failure: failure to classify the GE. This is because notification of the GE, development and notification of the PARs are actions that have to be performed as a consequence of the GE classification and that it can't be inferred a posteriori that these actions would have failed.~~

5

~~ID~~ ~~Question~~

~~35~~ ~~Evaluation~~

~~Does success in classification, notification and PARs depend on the individual or team response – could an individual failure to properly classify, notify, or develop PARs be corrected by the team and still be counted as a success for this indicator?~~

~~Response~~

~~The measures for successful opportunities under this indicator are accuracy and timeliness. As long as the classification, notification or PARs are timely and accurate, success is established. If the initial error of the individual is identified and corrected so that the timeliness criterion is met, the opportunity is successful.~~

1

~~ID~~ ~~Question~~

~~36~~ ~~Opportunities~~

~~Is there not the possibility that PARs could be issued at the SAE level?~~

~~Response~~

~~If PARs at the SAE are in the site Emergency Plan they could be counted as opportunities. However, this would only be appropriate where assessment and decision making is involved in development of the PAR. Automatic PARs with little or no assessment required would not be an appropriate contributor to the PI. PARs limited to livestock or crops and no PAR necessary decisions are also not appropriate.~~

2

~~ID~~ ~~Question~~

~~37~~ ~~Evaluation~~

~~During drill performance, the ERO may not always classify an event exactly the way that the scenario specifies. This could be due to conservative decision making, Emergency Director judgment call, or a simulator driven scenario that has the potential for multiple "forks". How does the program deal with these correct classification determinations that may not follow the path the evaluators were expecting?~~

~~Response~~

~~The NRC realizes that such situations can arise and that the acceptability of the classification may be subjective. In such cases, evaluators should document the rationale supporting their decision for eventual NRC inspection. However, as specified in NEI 99-02, in evaluating the acceptability of the classification, the evaluators have to determine if the classification was appropriate to the event as specified by the approved emergency plan and implementing procedures.~~

3

~~ID~~ ~~Question~~

~~38~~ ~~Weighting~~

~~Why are the opportunities for NOUEs and Alerts being treated numerically the same as the ones associated with the more risk significant SAEs and GEs?~~

~~Response~~

~~Although the working group initially considered using weighting factors to emphasize opportunities associated with SAEs and GEs, industry (NEI) guidance suggested that this would unnecessarily complicate the indicator calculation and not be consistent with calculation of the other PIs. PI experts within NRC concurred with this assessment.~~

4

~~ID~~ ~~Question~~

~~39~~ ~~Revision~~

~~If the utility holds the ERO to the standard of identifying multiple EALs for the same classification, could multiple opportunities for classification of a particular emergency classification be allowed?~~

~~Response~~

~~This idea has merit and if a proposal were received the Staff would consider it. However, several aspects should be considered in such a proposal including consistent implementation (all opportunities are assessed); consistent evaluation; how does the ERO member document/verbalize the additional EAL; what time frame is acceptable; and will the effort detract from other expected actions.~~

5

~~ID~~ ~~Question~~

~~40~~ ~~Reporting~~

~~What if PI data is not readily available at the end of a quarterly reporting cycle, e.g., a six week operator training cycle begins before the end of quarter, but is not completed until after the quarterly reporting date.~~

~~Response~~

~~The data may be reported in the next quarter, but this practice must be implemented consistently. Inspection will verify that the data is not preferentially reported to manipulate PIs.~~

~~ID~~ ~~Question~~

~~41~~ ~~Evaluation~~

~~How should performance be evaluated when drill participants properly declare an emergency classification that the scenario did not anticipate?~~

~~Response~~

~~The opportunity may be counted as a success; However, a corrective action should be written against the scenario (or the scenario development process). Another aspect of the same issue is that if a classification is missed that was not anticipated by the scenario, it too should be counted, but as a missed opportunity.~~

~~ID~~ ~~Question~~

~~43~~ ~~May credit for ERO be taken from drills that do not contribute to DEP?~~

~~Response~~

~~If the position performs one of the risk significant EP functions, classification, notification or PAR development, then the drill/exercise used for ERO statistics must contribute to DEP statistics. However, some positions are not responsible for these risk significant functions and participation in a drill that does not contribute statistics to DEP could be credited as participation. For example the OSC Operations Management position could drill without contribution to DEP, as could Health Physics positions not responsible for PARs. The appropriateness including drills involving HP positions responsible for PARs is site specific. Many sites develop PARs through a management review process of the dose projections provided by HP. That being the case, drills involving just the dose projection may not be appropriate for DEP statistics, but may be appropriate for ERO Drill participation statistics.~~

~~ID~~ ~~Question~~

~~125~~ ~~For the purpose of establishing success criteria for the EP DEP PI, how many 15 minute periods could there be for the example situation of a plant initially reaching a General Emergency?~~

~~Response~~

~~The licensee should classify an emergency once the data is available. The licensee should take a prudent approach and not delay classification due to uncertainty. Once the data is available the licensee should classify the event (NUE, Alert, Site Area, or General Emergency) and PAR within 15 minutes. Expectations are that you assess and classify the situation within 15 minutes. If you were done in 5 you should not wait the remaining 10 minutes. The call to the offsite emergency response organizations should be initiated during the next 15 minute time frame. Any changes to classification or PARs should reflect the same 15 minute sequence.~~

~~Hence there are two 15 minute time frame goals:~~
~~(1) to determine the classification and PAR, and~~
~~(2) to initiate notifications to the offsite emergency response agency.~~

1 **Data Example**

Emergency Response Organization
Drill/Exercise Performance

	3Q/96	4Q/96	1Q/97	2Q/97	3Q/97	4Q/97	1Q/98	2Q/98	3Q/98	4Q/98
Successful Classifications, Notifications & PARs over qtr	0	0	11	11	0	8	10	0	23	11
Opportunities to Perform Classifications, Notifications, & PARs in qtr	0	0	12	12	0	12	12	0	24	12
Total # of succesful Classifications, Notifications, & PARs in 8 qtrs								40	63	74
Total # of opportunities to perform Classification, Notifications & PARs in 8 qtrs								48	72	84
								2Q/98	3Q/98	4Q/98
Indicator expressed as a percentage of Opportunities to perform,								83.3%	87.5%	88.1%
Classifications, Communications & PARs										

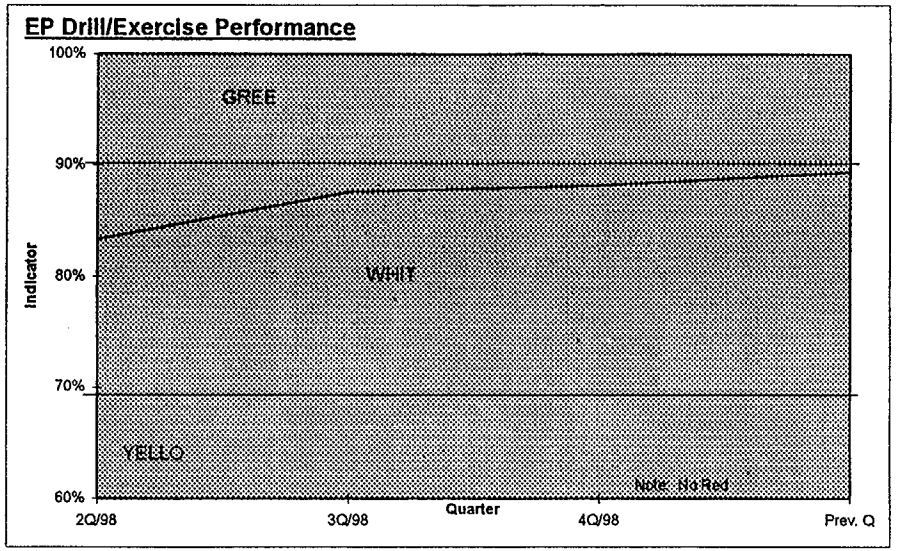

2

EMERGENCY RESPONSE ORGANIZATION DRILL PARTICIPATION

Purpose

This indicator tracks the participation of key members of the Emergency Response Organization in performance enhancing experiences, and through linkage to the DEP indicator ensures that the risk significant aspects of classification, notification, and PAR development are evaluated and included in the PI process. This indicator measures the percentage of key ERO members who have participated recently in performance~~proficiency~~-enhancing experiences such as drills, exercises, ~~training opportunities,~~ or in an actual event.

Indicator Definition

The percentage of key ERO members that have participated in a drill, exercise, or actual event during the previous eight quarters, **as measured on the last calendar day of the quarter.**

Data Reporting Elements

The following data are required to calculate this indicator and are reported:

- total number of key ERO members
- total key ERO members that have participated in a drill, exercise, or actual event in the previous eight quarters

The indicator is calculated and reported quarterly, based on participation over the previous eight quarters (see clarifying notes)

Calculation

The site indicator is calculated as follows:

$$\frac{\text{\# of Key ERO Members that have participated in a drill, exercise or actual event during the previous 8 qrts}}{\text{Total number of Key ERO Members}} \times 100$$

Definition of Terms

Key ERO members are those who fulfill the following functions:

- Control Room
  - Shift Manager (Emergency Director) - Supervision of reactor operations, responsible for classification, notification, and determination of protective action recommendations
  - Shift Communicator - provides initial offsite (state/local) notification
- Technical Support Center
  - Senior Manager - Management of plant operations/corporate resources

- Key Operations Support
- Key Radiological Controls - Radiological effluent and environs monitoring, assessment, and dose projections
- Key TSC Communicator- provides offsite (state/local) notification
- Key Technical Support

- Emergency Operations Facility

  - Senior Manager - Management of corporate resources
  - Key Protective Measures - Radiological effluent and environs monitoring, assessment, and dose projections
  - Key EOF Communicator- provides offsite (state/local) notification

- Operational Support Center

  - Key OSC Operations Manager

Clarifying Notes

When the functions of key ERO members include classification, notification, or PAR development opportunities, the success rate of these opportunities must contribute to Drill/Exercise Performance (DEP) statistics for participation of those key ERO members to contribute to ERO Drill Participation.

The licensee may designate drills as not contributing to DEP and, if the drill provides a performance enhancing experience as described herein, those key ERO members whose functions do not involve classification, notification or PARs may be given credit for ERO Drill Participation. Additionally, the licensee may designate elements of the drills not contributing to DEP (e.g., classifications will not contribute but notifications will contribute to DEP.) In this case, the participation of all key ERO members, except those associated with the non-contributing elements, may contribute to ERO Drill Participation. The licensee must document such designations in advance of drill performance and make these records available for NRC inspection.

Evaluated simulator training evolutions that contribute to ~~the~~ Drill/Exercise Performance indicator statistics ~~could~~ may be considered as opportunities for key ERO member participation and may be used for this indicator. The scenarios must at least contain a formally assessed classification and the results must be included in DEP statistics. However, there is no intent to disrupt ongoing operator qualification programs. Appropriate operator training evolutions should be included in this indicator only when E~~e~~mergency P~~p~~reparedness aspects are consistent with training goals.

If a key ERO member or operating crew member has participated in more than one drill during the eight quarter evaluation period, the most recent participation should be used in the Indicator statistics.

If a change occurs in the number of key ERO members, this change should be reflected in both the numerator and denominator of the indicator calculation.

If a person is assigned to more than one key position, it is expected that the person be counted in the denominator for each position and in the numerator only for drill participation that addresses each position. Where the skill set is similar, a single drill might be counted as participation in both positions.

When a key ERO member changes from one key ERO position to a different key ERO position with a skill set similar to the old one, the last drill/exercise participation may count. If the skill set for the new position is significantly different from the old position then the previous participation would not count.

Participation may be as a participant, mentor, coach, evaluator, or controller, but not as an observer. Multiple assignees to a given key ERO position could take credit for the same drill if their participation is a meaningful opportunity to gain proficiency in the assigned position.

The meaning of "drills" in this usage~~,~~ is intended to include performance ~~proficiency~~ enhancing ~~evolutions~~ experience (exercises, functional drills, simulator drills, table top drills, mini drills, etc.) that reasonably simulate the interactions between appropriate centers and/or individuals that would be expected to occur during emergencies. For example, control room interaction with offsite agencies could be simulated by instructors or OSC interaction could be simulated by a control cell simulating the TSC functions, and damage control teams.

In general, a drill does not have to include all ERO facilities to be counted in this indicator. A drill is of adequate scope if it reasonably simulates the interaction between one or more of the following facilities, as would be expected to occur during emergencies:

- the control room,
- the Technical Support Center (TSC),
- the Operations Support Center,
- the Emergency Operations Facility (EOF),
- field monitoring teams,
- damage control teams, and
- offsite governmental authorities.

The licensee need not develop new scenarios for each drill or each team. However, it is expected that the licensee will maintain a reasonable level of confidentiality so as to ensure the drill is a performance enhancing experience. A reasonable level of confidentiality means that some scenario information could be inadvertently revealed and the drill remain a valid performance enhancing experience. It is expected that the licensee will remove from drill performance statistics any opportunities considered to be compromised. There are many processes for the maintenance of scenario confidentiality that are generally successful. Examples may include confidentiality statements on the signed attendance sheets and spoken admonitions by drill controllers. Examples of practices that may challenge scenario confidentiality include drill controllers or evaluators or mentors, who have scenario knowledge becoming participants in subsequent uses of the same scenarios and use of scenario reviewers as participants.

~~When the functions of key ERO members include classification, notification or PAR opportunities, the success rate of these opportunities must contribute to Drill/Exercise Performance (DEP) statistics for participation of those key ERO members to contribute to ERO Drill Participation. However, the licensee may designate drills as not contributing to DEP and, if the drill provides proficiency enhancing evolutions as described above, those key ERO members whose functions do not involve classification, notification or PARs may be given credit for ERO Drill Participation. Additionally, the licensee may designate elements of the drills not contributing to DEP (e.g., classifications will not contribute but notifications will contribute to DEP.) In this case, the participation of all key ERO members, except those associated with the non-contributing elements, may contribute to ERO Drill Participation. The licensee must document such designations in advance of drill performance and make these records available for NRC inspection.~~

All individuals qualified to fill the Control Room Shift Manager/ Emergency Director position that actually might fill the position should be included in this indicator.

The communicator is the key ERO position that fills out the notification form, seeks approval and usually communicates the information to off site agencies. Performance of these duties is assessed for accuracy and timeliness and contributes to the DEP PI. Senior managers who do not perform these duties should not be considered communicators even though they approve the form and may supervise the work of the communicator. However, there are cases where the senior manager actually collects the data for the form, fills it out, approves it and then communicates it or hands it off to a phone talker. Where this is the case, the senior manager is also the communicator and the phone talker need not be tracked. The communicator is not expected to be just a phone talker who is not tasked with filling out the form. There is no intent to track a large number of shift communicators or personnel who are just phone talkers.

~~The communicator (e.g., shift communicator, key TSC communicator) should be the person who fills out the initial notification form and is responsible for the notifications. The communicator is not expected to be just a phone talker who is not responsible for accuracy or timeliness (although some programs may wish to track such phone talkers). There is no intent to track a large number of shift communicators or personnel who are just phone talkers.~~

~~**Frequently Asked Questions**~~

~~**ID**~~ ~~**Question**~~

~~4.4~~ ~~Duty Roster~~

~~How does the program address a person who is qualified in more than one position and listed on the ERO roster for all positions that he or she is qualified to fill?~~

~~Response~~

~~The licensee has to evaluate if the different positions being filled by the individual require different knowledge and skills to perform. If they do then it is expected that the person be counted in the denominator for each position and in the numerator only for drill/exercise participation that addresses each position. Where the skill set is similar, a single drill or exercise might be counted as participation in both positions. Examples of similar skill sets may include: Emergency Managers and their assistants or technical support staff, Communicators in different facilities, Health Physics personnel in different facilities. However, important differences in duties must be considered, e.g., TSC HP positions may involve onsite radiation safety where as EOF HP positions would not, and~~

~~the EOF HP positions may involve dose projection duties where as the TSC HP positions may not. Another option would be to evaluate the need to maintain this person qualified to fill multiple positions if the depth of positions being filled is more than four, then dual qualification of the individual may not be necessary, depending on the design of the duty roster and call out system.~~

1

~~ID~~ ~~Question~~

~~45~~ ~~Duty Roster~~

~~How does the program handle the case where someone shifts ERO position during the drill or exercise?~~

~~Response~~

~~The person's participation may be counted for each position as long as the participation constitutes a proficiency enhancing experience. The licensee will make this determination. The NRC will verify the adequacy of the licensee's determination as part of its performance indicator verification inspection.~~

2

~~ID~~ ~~Question~~

~~46~~ ~~Duty Roster~~

~~How does the program handle the case where the number of key ERO members is different at the end of the evaluation period than at the beginning of it?~~

~~Response~~

~~This indicator is calculated based on the number of key ERO members at the end of the quarter.~~

3

~~ID~~ ~~Question~~

~~47~~ ~~Duty Roster~~

~~Could a licensee have key ERO members cycle through a position for an exercise or drill and allow them to be counted for this indicator?~~

~~Response~~

~~The licensee can have key ERO members cycle through a position for an exercise or drill and allow them to be counted for this indicator as long as the licensee can justify that their participation is a proficiency enhancing experience.~~

4

~~ID~~ ~~Question~~

~~48~~ ~~Drill Frequency~~

~~Is participating in a performance training environment once every two years the new minimum expectation?~~

~~Response~~

~~There is no NRC requirement associated with the frequency of ERO personnel participation in drills or exercises. However, the threshold for this PI is that 80% of the key ERO members participate on a 2 year frequency for a plant to be considered as operating in the licensee response band (green).~~

5

~~ID~~ ~~Question~~

~~49~~ ~~Duty Roster~~

~~Is there a minimum number of ERO members.~~

~~Response~~

~~The NRC's requirements for minimum staffing at nuclear power plants are given in NUREG 0654 Table B-1. The site Emergency Plan commits to a method to meet these requirements and that is the minimum ERO. The PI measures the participation of a segment of the ERO (key ERO members as defined in NEI 9902) in drills/exercises (or other appropriate proficiency enhancing experiences).~~

6

~~ID~~ ~~Question~~

~~50~~ ~~Duty Roster~~

~~When a key ERO member is added to the organization or changes from one key ERO position to a different key ERO position between drills, is there a grace period for having him or her participate in drills?~~

~~Response~~

~~No, there is no grace period. However, if the individual's new position is similar to the old one, the last drill/exercise participation may count. If the new position is unrelated to the old position then the previous participation would not count.~~

1

~~ID~~ ~~Question~~

~~54~~ ~~Evaluation~~

~~What would happen if an ERO member fails to correctly perform its duties, for example invoked a wrong classification – does this count as participation?~~

~~Response~~

~~Yes, the participation would count and the missed opportunity for proper classification would be reflected in the DEP indicator. It might be expected that the individual will receive feed back on performance to ensure proficiency, but as long as the DEP PI is in the licensee response band, this problem is left to the licensee to correct.~~

2

~~ID~~ ~~Question~~

~~52~~ ~~Duty Roster~~

~~If a person is not yet qualified to fill a certain key ERO position but participated in a drill in that position for qualification purposes, would that participation count?~~

~~Response~~

~~This could be left to the licensee's judgment and verified by inspection. Where the participation in the drill/exercise is a proficiency enhancing experience it could be counted. This would mean that the individual is familiar with the position and able to perform it but perhaps the lack of qualification is merely due to the timing of required classroom training. However, he should not formally be on the duty roster until fully qualified. When that occurs, the drill/exercise participation date could be used in reporting ERO.~~

3

~~ID~~ ~~Question~~

~~53~~ ~~Duty Roster~~ ~~Can a single person fill multiple key functions?~~

~~Response~~

~~Yes, if that is in accordance with the approved emergency plan.~~

4

~~ID~~ ~~Question~~

~~54~~ ~~Operators~~

~~Many plants have staff personnel who hold SRO licenses. These individuals only stand watch in the control room as necessary to retain an active license. Is it necessary to track these individuals under the ERO PI?~~

~~Response~~

~~Yes, because they could perform as the Shift Manager in an actual event. However, an informal survey of EP programs indicated that these personnel routinely participate in drills, either as key ERO members, or as evaluators. This being the case, the burden for licensees should be minimal.~~

5

~~ID~~ ~~Question~~

~~85~~ ~~Shift Manager~~

~~In NEI 99-02, under Definition of Terms (Pg. 81), Control Room Shift Manager (Emergency~~

~~Director) is identified as a key ERO member. We currently only include those Shift Managers who have been permanently assigned to an operating crew. Operations Department personnel who may be qualified as Shift Manager and may fill this role in relief (vacations, training, etc.) or periodically to maintain qualifications are not currently considered under this indicator. Should all individuals qualified to fill the Shift Manager position be considered under this indicator, regardless of whether they are assigned to a specific crew on a continuing basis?~~

~~**Response**~~

~~Yes. All individuals qualified to fill the Shift Manager position who actually might fill the position should be included in this indicator.~~

~~ID~~	~~**Question**~~
~~126~~	~~Is it appropriate to track the Shift Supervisor's drill participation to meet the "shift communicator function" described in NEI 99-02?~~

~~**Response**~~

~~Yes, if the Shift Supervisor fills the Shift Communicator function.~~

1 **Data Example**

Emergency Response Organization (ERO) Participation

								2Q/98	3Q/98	4Q/98	Prev. Q
Total number of Key ERO personnel								56	56	64	64
Number of Key personnel participating in drill/event in 8 qtrs								48	52	54	53
								2Q/98	**3Q/98**	**4Q/98**	**Prev. Q**
Indicator percentage of Key ERO personnel participating in a drill in 8 qtrs								86%	93%	84%	83%

Thresholds		
Green		≥80%
White		<80%
Yellow		<60%
No Red Threshold		

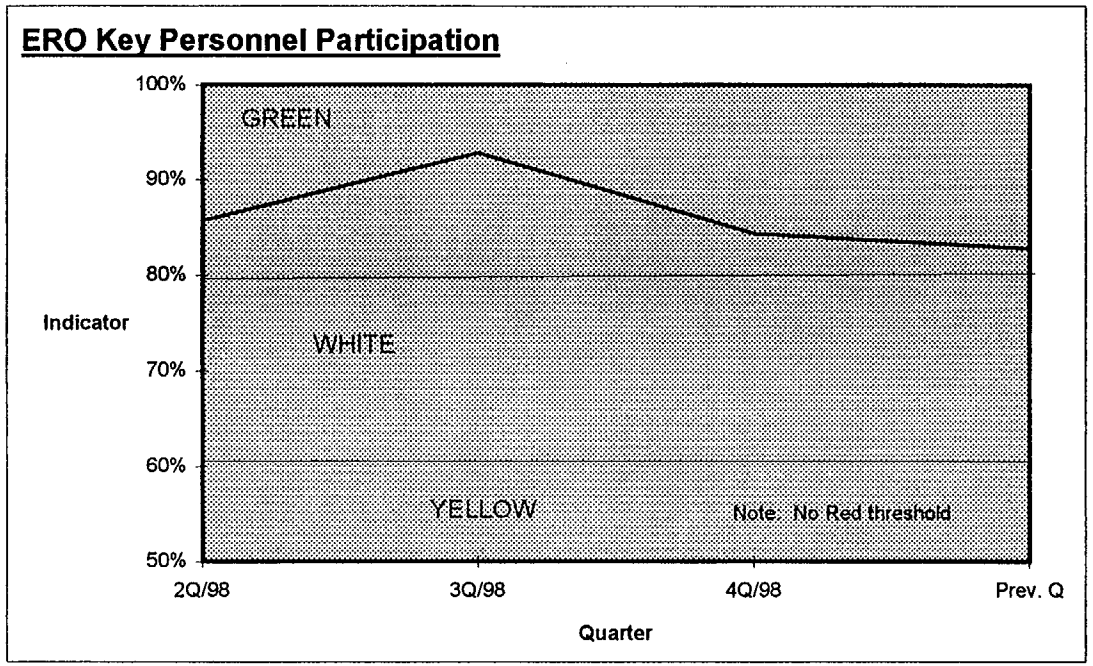

2

ALERT AND NOTIFICATION SYSTEM RELIABILITY

Purpose

This indicator monitors the reliability of the offsite Alert and Notification System (ANS), a critical link for alerting and notifying the public of the need to take protective actions. It provides the percentage of the sirens that are capable of performing their safety function based on regularly scheduled tests.

Indicator Definition

The percentage of ANS sirens that are capable of performing their function, as measured by periodic siren testing in the previous 12 months.

Periodic tests are the regularly scheduled tests (documented in the licensee's test plan or guidelines) that are conducted to actually test the ability of the sirens to perform their function (e.g., silent, growl, siren sound test). Tests performed for maintenance purposes should not be counted in the performance indicator database.

Data Reporting Elements

The following data are reported: (see clarifying notes)

- the total number of ANS siren-tests during the previous quarter
- the number of successful ANS siren-tests during the previous quarter

Calculation

The site value for this indicator is calculated as follows:

$$\frac{\text{\# of succesful siren - tests in the previous 4 qtrs}}{\text{total number of siren - tests in the previous 4 qtrs}} \times 100$$

Definition of Terms

Siren-Tests: the number of sirens times the number of times they are tested. For example, if 100 sirens are tested 3 times in the quarter, there are 300 siren-tests.

Successful siren-tests are the sum of sirens that performed their function when tested. For example, if 100 sirens are tested three times in the quarter and the results of the three tests are: first test, 90 performed their function; second test, 100 performed their function; third test, 80 performed their function. There were 270 successful siren-tests.

Clarifying Notes

The purpose of the ANS PI is to provide a uniform industry reporting ~~availability~~ approach and is not intended to replace the FEMA Alert and Notification reporting requirement at this time.

For those sites that do not have sirens, the performance of the licensee's alert and notification system will be evaluated through the NRC baseline inspection program. A site that does not have sirens does not report data for this indicator.

If a siren is out of service for maintenance or is inoperable at the time a regularly scheduled test is conducted, then it counts as both a siren test and a siren failure.

For plants where scheduled siren tests are initiated by local or state governments, if a scheduled test is not performed either intentionally or accidentally, missed tests are not considered as valid test opportunities. Missed test occurrences should be entered in the plant's corrective action program.

If a siren failure is determined to be due only to testing equipment, and subsequent testing shows the siren to be operable (verified by telemetry or simultaneous local verification) without any corrective action having been performed, the siren test should be considered a success. Maintenance records should be complete enough to support such determinations and validation during NRC inspection.

Siren systems may be designed with equipment redundancy or feedback capability. It may be possible for sirens to be activated from multiple control stations. Feedback systems may indicate siren activation status, allowing additional activation efforts for some sirens. If the use of redundant control stations is in approved procedures and is part of the actual system activation process, then activation from either control station should be considered a success. A failure of both systems would only be considered one failure, whereas the success of either system would be considered a success. If the redundant control station is not normally attended, requires setup or initialization, it may not be considered as part of the regularly scheduled test. Specifically, if the station is only made ready for the purpose of siren tests it should not be considered as part of the regularly scheduled test.

If a siren is out of service for scheduled planned refurbishment or overhaul maintenance performed in accordance with an established program, or for scheduled equipment upgrades, the siren need not be counted as a siren test or a siren failure. However, sirens that are out of service due to unplanned corrective maintenance would continue to be counted as failures. Unplanned corrective maintenance is a measure of program reliability. The exclusion of a siren due to temporary unavailability during planned maintenance/upgrade activities is acceptable due to the level of control placed on scheduled maintenance/upgrade activities. It is not the intent to create a disincentive to performing maintenance/upgrades to ensure the ANS performs at its peak reliability.

As part of a refurbishment or overhaul plan, it is expected that each utility would communicate to the appropriate state and/or local agencies the specific sirens to be worked and ensure that a functioning backup method of public alerting would be in-place. The acceptable time frame for allowing a siren to remain out of service for system refurbishment or overhaul maintenance should be coordinated with the state and local agencies. Based on the impact to their organization, these time frames should be specified in upgrade or system improvement implementation plans and/or maintenance procedures. Deviations from these plans and/or procedures would constitute unplanned unavailability and would be included in the PI.

~~Frequently Asked Questions~~

~~ID~~ ~~Question~~

~~55~~ ~~Equipment~~

~~This indicator only monitors siren reliability. Why aren't other EP equipment and facilities monitored?~~

~~Response~~

~~Ensuring public health and safety is the goal of the NRC oversight program. Analysis of the EP function shows that the ANS is a risk-significant system in ensuring licensee ability to protect the public health and safety. There is other important equipment and facilities, but ensuring the readiness of these is in the licensee response band. ERO measures the participation of key emergency response organization members in drills/exercises and assumes, in part, that such participation is a good method to identify equipment and facility problems. DEP measures timely and accurate classifications, notifications and PARs, which can only be performed if communication and assessment equipment are functioning. It is expected that licensee corrective action programs will address equipment readiness problems that are identified during drills. These programs are a focus of the NRC inspection program.~~

~~ID~~ ~~Question~~

~~56~~ ~~Sirens~~

~~If some sirens were unavailable due to storm damage, would the missed siren tests prior to the sirens being returned to service be considered failures?~~

~~Response~~

~~Yes, the missed siren tests would be considered failures. However, if the licensee can repair the damaged sirens prior to the test, then the siren tests would be considered successful.~~

~~ID~~ ~~Question~~

~~122~~ ~~In defining the "total number of siren tests in the previous 4 quarters" should those sirens not tested because they were either out of service or undergoing maintenance at the time of the test be included in the denominator of total number of siren tests? Should this number simply be the total number of sirens times the number of tests or the actual number of sirens tested? In our case, all sirens are always tested (except those that cannot be physically tested due to outage or maintenance) as part of each test.~~

~~Response~~

~~The total number of sirens should be reported in the denominator.~~

1

~~ID~~ ~~Question~~

~~123~~ ~~Some of the sirens included in the alert and notification performance indicator have the capability to be sounded from a remote location using a siren encoder. A quarterly 'growl' test is conducted at each siren site. Encoder testing is performed separately. Does the malfunction of a remote siren encoder constitute a failure if the siren is functional by local actuation?~~

~~Response~~

~~Testing mechanisms used to comply with FEMA reporting methodology should be used to report performance indicator statistics. Failures occurring during this testing would count toward the performance indicator.~~

2

3

~~ID~~ ~~Question~~

~~124~~ ~~The EP cornerstone, PI Alert and Notification System Reliability reports tests performed of off site sirens to determine the systems reliability. Indian Point 3 is on the same site as Indian Point 2 but owned and operated by the New York Power Authority. IP3 uses the offsite sirens to meet its EP requirements. However, the sirens are owned, operated, and tested by Con Edison, owners of Indian Point 2. IP3 has an administrative agreement on use of the sirens by IP2 for IP3. Con Edison (IP2) notifies NYPA (IP3) by letter on the results of their siren testing and the status of their equipment. Question: does Indian Point 3 have to report data for this PI (EP03) since NYPA does not perform the testing nor control the sirens, and only reports what Indian Point 2 reports ? (i.e., duplicate what IP2 reports)~~

~~Response~~

~~Yes. The responsibility to notify the public is held mutually by each licensee located on the same site with the same EPZ. Therefore, each licensee should provide alert and notification performance data event if it is repetitive due to a mutually shared site.~~

4

5

1 **Data Example**

Alert & Notification System Reliability							
Quarter	3Q/97	4Q/97	1Q/98	2Q/98	3Q/98	4Q/98	Prev. Q
Number of succesful siren-tests in the qtr	47	48	49	49	49	54	52
Total number of sirens tested in the qtr	50	50	50	50	50	55	55
Number of successful siren-tests over 4 qtrs				193	195	201	204
Total number of sirens tested over 4 qtrs				200	200	205	210
				2Q/98	3Q/98	4Q/98	Prev. Q
Indicator expressed as a percentage of sirens				96.5%	97.5%	98.0%	97.1%
Thresholds							
Green	>94%						
White	<94%						
Yellow	<90%						
Red							

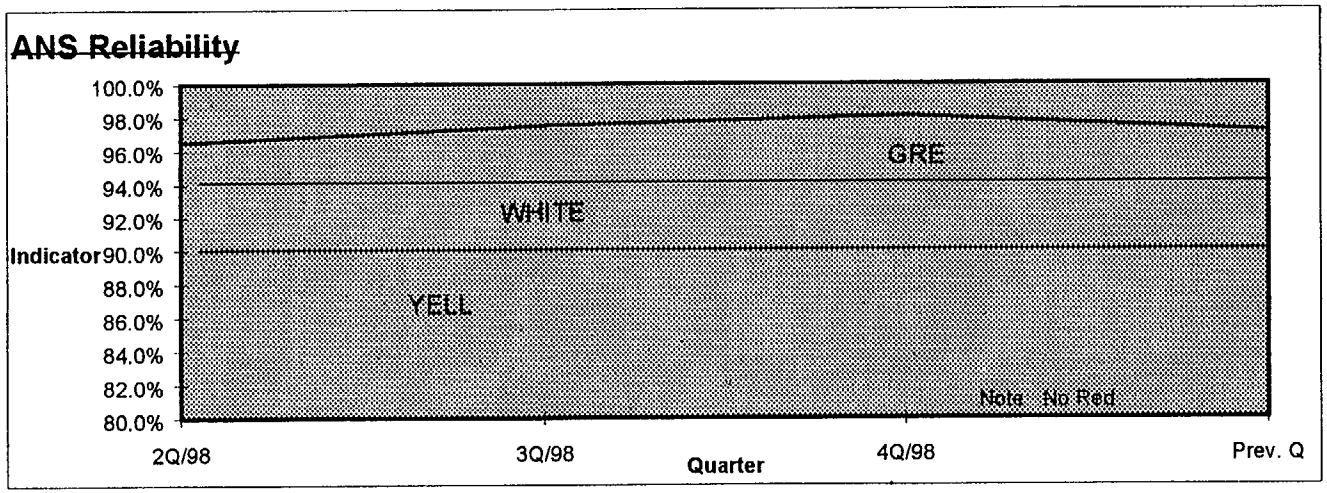

2

2.5 OCCUPATIONAL RADIATION SAFETY CORNERSTONE

The objectives of this cornerstone are to:

(1) keep occupational dose to individual workers below the limits specified in 10 CFR Part 20 Subpart C; and

(2) use, to the extent practical, procedures and engineering controls based upon sound radiation protection principles to achieve occupational doses that are as low as is reasonably achievable (ALARA) as specified in 10 CFR 20.1101(b).

There is one indicator for this cornerstone:

- Occupational Exposure Control Effectiveness

OCCUPATIONAL EXPOSURE CONTROL EFFECTIVENESS

Purpose

The purpose of this performance indicator is to address the first objective of the occupational radiation safety cornerstone. The indicator monitors the control of access to and work activities within radiologically-significant areas of the plant and occurrences involving degradation or failure of radiation safety barriers that result in readily-identifiable unintended dose.

The indicator includes dose-rate and dose criteria that are risk-informed, in that the indicator encompasses events that might represent a substantial potential for exposure in excess of regulatory limits. The performance indicator also is considered "leading" because the indicator:

- encompasses less-significant occurrences that represent precursors to events that might represent a substantial potential for exposure in excess of regulatory limits, based on industry experience; and

- employs dose criteria that are set at small fractions of applicable dose limits (e.g., the criteria are generally at or below the levels at which dose monitoring is required in regulation).

Indicator Definition

The performance indicator for this cornerstone is the sum of the following:

- Technical specification high radiation area (>1 rem per hour) occurrences
- Very high radiation area occurrences
- Unintended exposure occurrences

Data Reporting Elements

The ~~following~~ data listed below are reported for each site. For multiple unit sites, an occurrence at one unit is reported identically as an input for each unit. However, the occurrence is only counted once against the site-wide threshold value.

- The number of technical specification high radiation area (>1 rem per hour) occurrences during the previous quarter
- The number of very high radiation area occurrences during the previous quarter
- The number of unintended exposure occurrences during the previous quarter

Calculation

The indicator is determined by summing the reported number of occurrences for each of the three data elements during the previous 4 quarters.

Definition of Terms

Technical Specification High Radiation Area (>1 rem per hour) Occurrence - A nonconformance (or concurrent[6] nonconformances) with technical specifications[7] ~~(or comparable provisions in licensee procedures if the technical specifications do not include provisions for high radiation areas) and~~ or comparable requirements in 10 CFR 20[8] applicable to technical specification high radiation areas (>1 rem per hour) that results in the loss of radiological control over access or work activities within the respective high-radiation area (>1 rem per hour). For high radiation areas (>1 rem per hour), this PI does not include nonconformance with licensee-initiated controls that are beyond what is required by technical specifications and the comparable provisions in 10 CFR Part 20.

Technical Specification high radiation areas, commonly referred to as locked high radiation areas, includes any area, accessible to individuals, in which radiation levels from radiation sources external to the body are in excess of 1 rem (10 mSv) per 1 hour at 30 centimeters from the radiation source or 30 centimeters from any surface that the radiation penetrates, and excludes very high radiation areas. Technical specification high radiation areas, in which radiation levels from radiation sources external to the body are less than or equal to 1 rem (10 mSv) per 1 hour at 30 centimeters from the radiation source or 30 centimeters from any surface that the radiation penetrates, are excluded from this performance indicator.

- "Radiological control over access to technical specification high radiation areas" refers to measures that provide assurance that inadvertent entry into the technical specification high radiation areas by unauthorized personnel will be prevented.

- "Radiological control over work activities" refers to measures that provide assurance that dose to workers performing tasks in the area is monitored and controlled.

---

[6] "Concurrent" means that the nonconformances occur as a result of the same cause and in a common timeframe.

[7] Or comparable provisions in licensee procedures if the technical specifications do not include provisions for high radiation areas.

[8] Includes 10 CFR 20, §20.1601(a), (b), (c), and (d) and §20.1902(b).

Examples of occurrences that would be counted against this indicator include:

- Failure to post an area as required by technical specifications,
- ~~a~~ Failure to secure an area against unauthorized access,
- ~~a~~ Failure to provide a means of personnel dose monitoring or control required by technical specifications,
- Failure to maintain administrative control over a key to a barrier lock as required by technical specifications, or
- ~~A~~an ~~actual~~ occurrence involving unauthorized or unmonitored entry into an area.

Examples of occurrences that are not counted include the following:

- Situations involving areas in which dose rates are less than or equal to 1 rem per hour.
- Occurrences associated with isolated equipment failures. This might include, for example, discovery of a burnt-out light, where flashing lights are used as a technical specification control for access, or a failure of a lock, hinge, or mounting bolts, when a barrier is checked or tested.[9]

Very High Radiation Area Occurrence - A nonconformance (or concurrent nonconformances) with 10 CFR 20 and licensee procedural requirements that results in the loss of radiological control over access to or work activities within a very high radiation area. "Very high radiation area" is defined as any area accessible to individuals, in which radiation levels from radiation sources external to the body could result in an individual receiving an absorbed dose in excess of 500 rads (5 grays) in 1 hour at 1 meter from a radiation source or 1 meter from any surface that the radiation penetrates

- "Radiological control over access to very high radiation areas" refers to measures to ensure that an individual is not able to gain unauthorized or inadvertent access to very high radiation areas.

- "Radiological control over work activities" refers to measures that provide assurance that dose to workers performing tasks in the area is monitored and controlled.

Unintended Exposure Occurrence - A single occurrence of ~~the~~ degradation or failure of one or more radiation safety barriers that results~~ing~~ in unintended occupational exposure(s), as defined below. ~~equal to or exceeding any of the following dose criteria from a single occurrence:~~

Following are examples of an occurrence of degradation or failure of a radiation safety barrier included within this indicator:

- failure to identify and post a radiological area
- failure to implement required physical controls over access to a radiological area

[9] Presuming that the equipment is subject to a routine inspection or preventative maintenance program, that the occurrence was indeed isolated, and that the causal condition was corrected promptly upon identification.

- failure to survey and identify radiological conditions
- failure to train or instruct workers on radiological conditions and radiological work controls
- failure to implement radiological work controls (e.g., as part of a radiation work permit)

An occurrence of the degradation or failure of one or more radiation safety barriers is only counted under this indicator if the occurrence resulted in unintended occupational exposure(s) equal to or exceeding any of the dose criteria specified in the table below. The dose criteria were selected to serve as "screening criteria," only for the purpose of determining whether an occurrence of degradation or failure of a radiation safety barrier should be counted under this indicator. The dose criteria should not be taken to represent levels of dose that are "risk-significant." In fact, the dose criteria selected for screening purposes in this indicator are generally at or below dose levels that are required by regulation to be monitored or to be routinely reported to the NRC as occupational dose records.

Table: Dose Values Used as Screening Criteria to Identify an Unintended Exposure Occurrence in the Occupational Exposure Control Effectiveness PI

2% of the stochastic limit in 10 CFR 20.1201 on total effective dose equivalent. The 2% value is 0.1 rem.	
10 % of the non-stochastic limits in 10 CFR 20.1201. The 10% values are as follows:	
5 rem	the sum of the deep-dose equivalent and the committed dose equivalent to any individual organ or tissue
1.5 rem	the lens dose equivalent to the lens of the eye
5 rem	the shallow-dose equivalent to the skin or any extremity, other than dose received from a discrete radioactive particle
20% of the limits in 10 CFR 20.1207 and 20.1208 on dose to minors and declared pregnant women. The 20% value is 0.1 rem.	
100% of the limit on shallow-dose equivalent from a discrete radioactive particle. The current value is 50 rem.[10]	

~~The dose criteria are established at levels deemed to be readily identifiable, based on industry experience. The dose criteria should not be taken to represent levels of dose that are "risk-significant." In fact, the criteria are generally at or below dose levels that are required by regulation to be monitored or to be routinely reported to the NRC as occupational dose records.~~

[10] The NRC is currently proceeding with rulemaking that may result in a change to the limit on shallow-dose equivalent from a discrete radioactive particle. At the time a final rule is issued, the performance indicator value will be revised as needed.

~~Examples of "degradation or failure of radiation barriers" that could potentially count against this indicator include the following (i.e., if the degradation or failure directly results in unintended dose equal to or greater than the respective criteria):~~

~~failure to identify and post a radiological area~~
~~failure to implement required physical controls over access to a radiological area~~
~~failure to survey and identify radiological conditions~~
~~failure to train or instruct workers on radiological conditions and radiological work controls~~
- ~~failure to implement radiological work controls (e.g., as part of a radiation work permit)~~

"Unintended exposure" refers to exposure that results in dose~~is~~ in excess of the administrative ~~dose~~ guideline(s) set by a licensee~~s~~ as part of their radiological controls for access or entry into a radiological area. Administrative dose guidelines may be established

- -within radiation work permits, procedures, or other documents,
- via the use of alarm setpoints for personnel dose monitoring devices, or
- by other means, as specified by the licensee.

It is incumbent upon the licensee to specify the method(s) being used to administratively control dose. ~~Such~~ A~~a~~n administrative dose guideline set by the licensee is not a regulatory limit and does not, in itself, constitute a regulatory requirement. A revision to an administrative dose guideline(s) during job performance is acceptable (with regard to this PI) if conducted in accordance with plant procedures or programs.

If a specific type of exposure was not anticipated or specifically included as part of job planning or controls, the full amount of the dose resulting from that type of exposure should be considered as "unintended" in making a comparison with the criteria in the PI. For example, this might include Committed Effective Dose Equivalent (CEDE), Committed Dose Equivalent (CDE), or Shallow Dose Equivalent (SDE).

Clarifying Notes

An o~~O~~ccurrences (or concurrent occurrences) that potentially meet the definition of more than one element of the performance indicator will only be counted once. In other words, an occurrence (or concurrent occurrences) will not be double-counted (or triple-counted) against the performance indicator. If two or more individuals are exposed in a single occurrence, the occurrence is only counted once.

Radiography work conducted at a plant under another licensee's 10 CFR Part 34 license is generally outside the scope of this PI. However, if a Part 50 licensee opts to establish additional radiological controls under its own program consistent with technical specifications or comparable provisions in 10 CFR Part 20, then a non-conformance with such additional controls or unintended dose resulting from the non-conformance shall be evaluated under the criteria in the PI.

1 ~~Frequently Asked Questions~~

~~ID~~ ~~Question~~

~~92~~ ~~Some radiological areas are posted or controlled as "locked high radiation areas" for precautionary or administrative purposes, even though the dose rates are not actually in excess of 1 rem per hour. Does the Technical Specification High Radiation Area (>1 rem) element of the Occupational Exposure Control Effectiveness PI apply to such areas?~~

~~Response~~

~~No. The Technical Specification High Radiation Area (>1 rem) element of the PI applies to areas that are "accessible to individuals, in which radiation levels from radiation sources external to the body are in excess of 1 rem (10 mSv) per hour at 30 centimeters from the radiation source or 30 centimeters from any surface that the radiation penetrates."~~

2

~~ID~~ ~~Question~~

~~94~~ ~~A key to the door of a high radiation area (>1 rem per hour) was issued to an individual. The individual used the key to provide access to the high radiation area by plant personnel. It was subsequently discovered that the individual was not qualified to be issued high radiation area keys. Does this count against the PI?~~

~~Response~~

~~Yes. The question is whether this situation constituted a nonconformance with the technical specifications for administrative control of high radiation area keys. For example, typical wording in technical specifications is that "the keys shall be maintained under the administrative control of the Shift Foreman on duty, or health physics supervision.~~

3

4

~~ID~~ ~~Question~~

~~96~~ ~~A door to a high radiation area (>1 rem per hour) was found unlocked and unguarded. In a similar occurrence, the gate to a high radiation area (>1 rem per hour) controlled with flashing lights was found unlatched and unguarded. A follow-up investigation in both cases indicated that no unauthorized entry had been made into the area. Do these occurrences count against the PI?~~

~~Response~~

~~Yes. Such occurrences should be counted under the PI as nonconformance with technical specifications. Typical wording in technical specifications states that such areas "shall be provided with locked or continuously guarded doors to prevent unauthorized entry," and that areas with flashing lights shall be "barricaded." Whether anyone accessed the area is not material to meeting the technical specification requirement.~~

5

~~ID~~ ~~Question~~

~~98~~ ~~While individuals were working in an area, the local area radiation monitor alarmed. The workers promptly exited the area and notified health physics. Follow-up surveys by the health physics staff indicated that radiation dose rates in the area had increased to a level in excess of 1 rem per hour. Proper controls and posting were then established for the area. Does this count against the PI?~~

~~Response~~

~~No. As described, this occurrence would not appear to be "countable" against the PI. The purpose of the area radiation monitors is to alert personnel to increases in radiation levels. It appears that the personnel responded appropriately to the alarm by exiting the area and notifying health physics, and~~

~~that proper follow-up actions were then taken with regard to implementing controls as required by the technical specifications. However, the circumstances that led to the increase in dose rates and the resultant dose to the individuals should be evaluated per the criteria for the Unintended Dose element of the PI.~~

1

~~ID~~ ~~Question~~

~~100~~ ~~During performance of routine radiation surveys a health physics technician determined that the radiation levels in an area were in excess of 1 rem per hour. Proper controls and posting were established for the area. The increase in radiation levels was due to a change in plant system configuration made earlier in the shift. Does this count against the PI?~~

~~Response~~

~~The answer to this question depends upon the specific circumstances, for example, whether the survey and actions taken were timely and appropriate, whether the potential for the change in radiological conditions was anticipated, etc. In general, identifying changes in radiological conditions is an expected outcome of performing systematic and routine radiation surveys. Thus, such occurrences would not typically be counted against the PI. However, if surveys are not performed or controls are not established in an appropriate and timely manner, then such occurrences may be "countable" against the PI. It is not practical to define specific criteria for "timely and appropriate" for generic application. Such occurrences should be evaluated taking into account the circumstances that led to the change in radiological conditions and the scope and purpose of the survey that identified the change in conditions.~~

2

~~ID~~ ~~Question~~

~~102~~ ~~A health physics technician exited a contaminated high radiation area (>1 rem per hour), secured the access door, removed his protective clothing, and left the high radiation area key at the stepoff pad. The technician went to a nearby frisker to check himself for contamination, and then returned to the stepoff pad to retrieve the key. Should this be counted against the PI with regard to administrative control of the key?~~

~~Response~~

~~No. This should not be counted under the PI. It does not represent a loss of administrative control over the key.~~

3

~~ID~~ ~~Question~~

~~104~~ ~~An individual accessed a high radiation area (>1 rem per hour) and was provided with a radiation survey instrument (i.e., a radiation monitoring device that continuously indicates the radiation dose rate in the area). Access was made under an approved radiation work permit (RWP) which specified a maximum allowable staytime that was complied with. Subsequent to the access, it was determined that the radiation survey instrument provided to the individual had not been source checked "daily or prior to use" as specified in plant procedures. The radiation survey instrument was then tested and determined to be fully operable and within calibration. Should this be counted against the PI?~~

~~Response~~

~~No. If the applicable provisions of technical specifications (or licensee commitments for alternate control for high radiation areas if the technical specifications do not include provisions for high radiation areas) do not explicitly require the source check, then this should not be counted against the PI. Although this situation appears to represent a nonconformance with plant procedures, the performance basis for the PI appears to have been met in that the radiation survey instrument was, in fact, operable and in calibration.~~

1

~~ID~~ ~~Question~~

~~106~~ ~~Does the PI for technical specification high radiation areas (>1 rem per hour) and very high radiation areas apply to spent fuel pools?~~

~~Response~~

~~In general, spent fuel pools are not considered high radiation areas because of the inaccessibility of radioactive materials that are stored in the pool, provided that: "1) control measures are implemented to ensure that activated materials are not inadvertently raised above or brought near the surface of the pool water, 2) all drain line attachments, system interconnections, and valve lineups are properly reviewed to prevent accidental drainage of the water, and 3) controls for preventing accidental drops in water levels that may create high and very high radiation areas are incorporated into plant procedures" ((Regulatory Guide 8.38). However, when a diver enters the pool to perform underwater activities, or upon movement of highly radioactive materials stored in the pool, proper controls must be implemented. Health Physics Position No. 016 also provides guidance on the applicability of access controls for spent fuel pools.~~

2

~~ID~~ ~~Question~~

~~108~~ ~~Is the determination of the amount of dose received as the result of an unintended exposure occurrence based solely on the dose tracking method being used (e.g., EPD or stay-time tracking), or can other data be used? For example, upon exiting a radiological area, an individual's EPD indicates that the unintended exposure is 125 mrem. A subsequent evaluation of thermo-luminescent dosimeter data indicates that the unintended exposure is 75 mrem. Which result should be used in determining if the occurrence should be counted under the PI?~~

~~Response~~

~~The best available data relevant to the PI should be used to determine whether any of the PI dose-screening criteria have been exceeded. As described in the example, the determination should include an evaluation of which data more accurately represents the dose received—which is the result that should be applied to the PI dose screening criteria. For example, if there is reason to believe that the EPD data is invalid, e.g., due to over-response to the type of radiation involved, radio-frequency interference, or equipment malfunction, then other data including the TLD results may be used.However, the evaluation should not lose sight of the intent of the PI. The PI is intended to identify occurrences of "degradation or failure of one or more radiation safety barriers resulting in ....a "readily identifiable" level of unintended exposure for the purpose of trending overall performance in the area of occupational radiation safety. The dose screening criteria serve as a tool for determining what level of dose is "readily identifiable," based on industry experience, and do not represent levels of dose that are "risk significant." In fact the criteria are at or below levels of occupational dose that are required by regulation to be monitored or routinely reported to the NRC as occupational dose records.Therefore, the evaluation of resultant dose from an occurrence should not overshadow the objective of trending and correcting program discrepancies as intended by the use of the performance indicators.~~

3

~~ID~~ ~~Question~~

~~110~~ ~~The administrative dose guideline for an individual working in a high radiation area was established via an EPD alarm setpoint at 100 mrem. When exiting the area, the individual noted that the EPD alarm was sounding and the indicated dose was 250 mrem. Due to excessive noise, the individual had not heard the alarm while in the high radiation area. Should this be counted under the PI.~~

~~Response~~

~~Yes. The impact of excessive noise on the effectiveness of the EPD alarm as a dose control measure was not properly evaluated, e.g., as part of the area survey or review of the work scope. This represents a "degradation or failure" of a radiation safety barrier.~~

1
2

~~ID~~ ~~Question~~

~~112~~ ~~Three individuals entered a radiological area to perform preventative maintenance work on a valve. Each of the workers was provided an EPD, worn on the chest, with an alarm setting of 100 mrem which also served as the administrative dose guideline for the entry. The EPD setting, and the location of the EPD on the chest, was based on a survey that indicated that the highest source of exposure was the valve itself. Upon exiting the area the individual doses, as indicated by the EPD, ranged from 75-90 mrem. However, a follow-up survey of the area revealed that a pump, located behind where the individuals were working on the valve, represented a higher source of exposure than the valve. This was apparently missed during the pre job survey of the work area. Therefore, the EPD, located on the chest, were not properly placed to monitor dose at the point of highest exposure. An evaluation of stay-times and orientation of the individuals in the work area determined that the actual exposures were three times what was indicated by the EPD. Does this count under the PI? If so, since three individuals were involved, would this be 1 or 3 counts under the PI?~~

~~Response~~

~~Yes. This should be counted under the PI. As described, there clearly was a degradation or failure of one or more radiation safety barriers. From the example, the unintended exposure for the three individuals ranged from 125 to 170 mrem, which each exceeded the 100 mrem dose screening criterion. Although three individuals were involved, there was only one "occurrence" involving degradation or failure of one or more radiation safety barriers. Therefore, this would only be counted once under the PI.~~

3

~~ID~~ ~~Question~~

~~91~~ ~~We are currently reviewing our corrective action program documents to identify radiological occurrences that should be counted under the PI for Occupational Exposure Control Effectiveness. In conducting this review, we are trying to evaluate some occurrences that were not analyzed (at the time of occurrence) using the PI criteria, i.e., we are applying the PI criteria retrospectively. What "new" criteria are established in the PI for Occupational Exposure Control Effectiveness? How should such criteria be applied retrospectively?~~

~~Response~~

~~Response is in preparation or review.~~

4

~~ID~~ ~~Question~~

~~93~~ ~~During a routine check of high radiation area doors and gates, a door popped open when tested. Follow-up investigation determined that the latching mechanism had failed due to a mechanical defect. A similar issue regards the discovery of loose mounting bolts on a high radiation area gate. The looseness of the mounting bolts could have allowed enough movement for someone to force the gate open. No one had actually made an unauthorized entry into the high radiation area in either case. Are such situations counted against the PI?~~

~~Response~~

~~No. This type of situation would not be counted against the PI if it was identified and corrected in a timely manner, appeared to be an isolated occurrence, and had not led to an unauthorized entry into a~~

~~high radiation area (>1 rem per hour). In essence, these situations represent the discovery of a deficient condition and do not reflect a nonconformance with applicable technical specifications or 10 CFR Part 20 requirements.~~

1

2

~~ID~~ ~~Question~~

~~95~~ ~~During a routine check, the keybox (containing high radiation area keys) in the health physics office was found unlocked, which is contrary to plant procedures. A follow-up investigation determined that all keys were accounted for and no keys had been issued or used in an unauthorized manner. Does this count against the PI.~~

~~Response~~

~~No. Although this situation apparently represents a nonconformance with plant procedures, it does not appear to be a situation that would be counted against the PI. The question is whether the keys were administratively controlled per the technical specifications. From the description of the circumstances, administrative control over the keys was maintained.~~

3

~~ID~~ ~~Question~~

~~97~~ ~~An individual entered a high radiation area (>1 rem per hour) with an electronic personnel dosimeter (EPD) that was not turned on. Does this count against the PI?~~

~~Response~~

~~Yes. The technical specifications typically provide several options for monitoring of individuals accessing high radiation areas, including the option of being provided "a radiation monitoring device that continuously integrates the radiation dose in the area and alarms when a preset integrated dose is received" (e.g., a functioning EPD). If that was the applicable option in this situation, and none of the other options were in effect, then the occurrence should be counted under the PI.~~

4

~~ID~~ ~~Question~~

~~99~~ ~~A wire cage had been constructed around an area of the plant containing a resin transfer line that, during resin transfer operations, is subject to transient radiation levels in excess of 1 rem per hour. The wire cage was constructed in a manner to preclude personnel access to areas where the dose rates exceed 1 rem per hour, sometimes referred to as a "cocoon." The caged area is located within a room that is posted and controlled as a high radiation area. Does the PI for technical specification high radiation areas (>1 rem per hour) apply to this situation.~~

~~Response~~

~~No. Health Physics Position No. 242 provides guidance that 10 CFR Part 20 requirements for high radiation areas do not apply to such areas that are not accessible, e.g., "cocooned" areas. So long as the dose rates 30 cm beyond the caged area do not exceed 1 rem per hour, the PI does not apply.~~

5

~~ID~~ ~~Question~~

~~101~~ ~~An individual enters an area (not posted and controlled as a high radiation area) and his EPD alarms on high dose rate. The individual promptly exits the area and notifies health physics. Follow-up surveys by the health physics staff indicated that radiation dose rates in the area were in excess of 1 rem per hour. Proper controls and posting were established for the area. Does this count against the PI?~~

~~Response~~

~~Yes. As described, this occurrence should be counted against the PI. It appears that the high~~

~~radiation area (>1 rem per hour) existed prior to access being made to the area, and that proper posting and controls were not in place to prevent unauthorized entry, as required by technical specifications.~~

1

~~ID~~ ~~Question~~

~~103~~ ~~An independent verification was not made to ensure that the door of a high radiation area (>1 rem per hour) was secured after exiting the area. The independent verification is required by plant procedures as a defense in depth measure. It is not explicitly required by technical specifications. A follow-up investigation determined that the door was, in fact, secured. Should this be counted against the PI?~~

~~Response~~

~~No. This type of occurrence should not be counted against the PI. The reference criteria for the PI for technical specification high radiation areas (>1 rem per hour) are the technical specifications (or licensee commitments for alternate controls for high radiation areas if the technical specifications do not include provisions for high radiation areas) and applicable provisions of 10 CFR Part 20. Licensees may opt to implement additional controls, i.e., beyond what is required by technical specifications and 10 CFR Part 20, but such controls are outside the scope of the PI.~~

2

~~ID~~ ~~Question~~

~~105~~ ~~Plant procedures include a provision that approval of both the operations shift supervisor and the health physics supervisor is required for issuance of keys to very high radiation areas. This provision is in addition to that for issuance of high radiation area keys, which only requires the approval of the health physics supervisor. If a very high radiation area key is issued without the approval of the operations shift supervisor, i.e., contrary to the plant procedure, does this count against the PI.~~

~~Response~~

~~Yes. This should be counted against the PI. The criteria for very high radiation area occurrences are based on "nonconformance with 10 CFR Part 20 and licensee procedural requirements that result in the loss of radiological control over access to or work within a very high radiation area." Part 20.1602 requires that licensees "shall institute additional measures to ensure that an individual is not able to gain unauthorized or inadvertent access" to very high radiation areas. Such additional measures are typically implemented through plant procedures or engineered controls because there is no technical specification specifically for very high radiation areas. Therefore, occurrences that involve a failure to implement such additional measures should be counted against the PI. Regulatory Guide 8.38 describes several additional measures that are acceptable to the staff.~~

3

~~ID~~ ~~Question~~

~~107~~ ~~With regard to unintended exposure from external sources, is the EPD alarm setpoint the required reference point that should be used for determining if the 100 mrem TEDE criterion has been exceeded?~~

~~Response~~

~~No. The EPD alarm setpoint is not the only reference point (i.e., administrative dose guideline) that can be used for the unintended exposure PI. The PI Manual provides guidance that "administrative dose guidelines may be established within radiation work permits or other documents, via the use of alarm setpoints for personnel monitoring devices, or other means, as specified by the licensee." However, it is up to the licensee to specify what method or methods are being applied with regard to the unintended exposure PI.~~

4

1

~~ID~~ ~~Question~~

~~109~~ ~~Upon exiting from working in the fuel transfer canal, an individual monitored himself with a frisker and detected facial contamination. Follow-up investigation determined that the individual received an intake that resulted in a committed effective dose equivalent (CEDE) of 110 mrem. The pre-job evaluation did not anticipate a potential for an intake and no administrative guideline for internal dose was specified for the work. Should this be counted under the PI for unintended exposure?~~

~~Response~~

~~Yes. This should be counted against the PI. Since internal dose apparently was not anticipated as part of the job planning and controls, then the 110 mrem CEDE should be applied under the PI, which exceeds the 100 mrem TEDE criterion. For similar situations involving shallow dose equivalent, lens dose equivalent, and committed dose equivalent, where such dose has not been anticipated as part of the job planning and controls, the dose received should be applied to the respective criteria.~~

2

~~ID~~ ~~Question~~

~~111~~ ~~A team of workers, including a health physics technician, made a containment entry at power to investigate possible primary system leakage. Each team member was provided an EPD set to alarm at 200 mrem, which was the administrative dose guideline established for the entry. The walkdown in containment took longer than expected, and eventually several of the EPDs began to alarm, having reached the alarm setpoint of 200 mrem. After discussion with the rest of the team, the health physics technician (as permitted by plant procedures) authorized an extension of the administrative dose guideline to 300 mrem to complete the walkdown. This action was taken to minimize the overall dose that would be incurred if the team were to exit the containment, regroup, and then make a second entry to complete the walkdown. When the team completed the walkdown and exited the containment, two of the team had received a dose of 325 mrem. Does this occurrence count against the PI?~~

~~Response~~

~~No. This occurrence should not be counted against the PI because the resulting dose was only 25 mrem greater than the revised guideline of 300 mrem. The use and specification of administrative dose guidelines is the responsibility of the licensee. As described in the example, the revision to the administrative dose guideline was conducted in accordance with the plant procedures or program. Therefore, the revised guideline would be applicable to the PI.~~

3

4

~~ID~~ ~~Question~~

~~130~~ ~~For high radiation areas (> 1 rem) where a flashing light is used as a TS required control, is it considered an occurrence under the Occupational Exposure high radiation area reporting element as a failure of administrative control if it is discovered that the flashing light has failed some time after the control was implemented? Failure of the light could be due to loss of its power source (dead battery or external power loss), mechanical failure (light bulb), etc.~~

~~Response~~

~~No. The PI is intended to capture radiation safety program failures, not isolated equipment failures. This answer presumes that the occurrence was isolated and was corrected in a timely manner.~~

5

6

~~ID~~ ~~Question~~

~~131~~ ~~This question refers to radiography work performed at a plant under another licensee's 10 CFR Part 34 license. If there is an occurrence associated with the radiography work involving loss of control of a high or very high radiation area or unintended dose, does this count under the occupational radiation safety PI?~~

~~**Response**~~
~~No. Radiography work conducted at a plant under another licensee's 10 CFR Part 34 license is outside the scope of the PI. Responsibility for barriers, dose control, etc., resides with the Part 34 licensee. The reactor regulatory oversight PIs apply to Part 50 licensee activities.~~

1
2

~~ID~~ ~~**Question**~~
~~132~~ ~~For multiple unit sites, if a PI reportable condition occurs on one unit, e.g., a Technical Specification high radiation area occurrence inside the Unit 1 containment building, is it necessary to report the occurrence in the indicator for all units?~~

~~**Response**~~
~~Yes. The PI is a site-wide indicator. The current reporting mechanism requires that occupational radiation safety occurrences be input identically for each unit. However, the occurrence is only counted once toward the site-wide threshold value (i.e., it is not double or triple counted for multiple unit sites).~~

3
4
5

Data Example

Occupational Exposure Control Effectiveness

Quarter	3Q/95	4Q/95	1Q/96	2Q/96	3Q/96	4Q/96	1Q/97	2Q/97	3Q/97	4Q/97	1Q/98	2Q/98	3Q/98	4Q/98	Prev. Qrtr
Number of technical specification high radiation occurrences during the quarter	0	0	3	0	0	0	0	0	0	0	0	0	0	0	0
Number of very high radiation area occurrences during the quarter	0	0	0	0	0	0	1	0	1	0	0	0	0	0	0
Number of unintended exposure occurrences during the quarter	1	0	0	0	0	0	0	0	0	0	0	0	0	1	0
Reporting Quarter				2Q/96	3Q/96	4Q/96	1Q/97	2Q/97	3Q/97	4Q/97	1Q/98	2Q/98	3Q/98	4Q/98	Prev. Qrtr
Total # of occurrences in the previous 4 qtrs				4	3	3	1	1	2	2	1	1	0	1	1

Thresholds	
Green	≤2
White	>2
Yellow	>5
No Red Threshold	

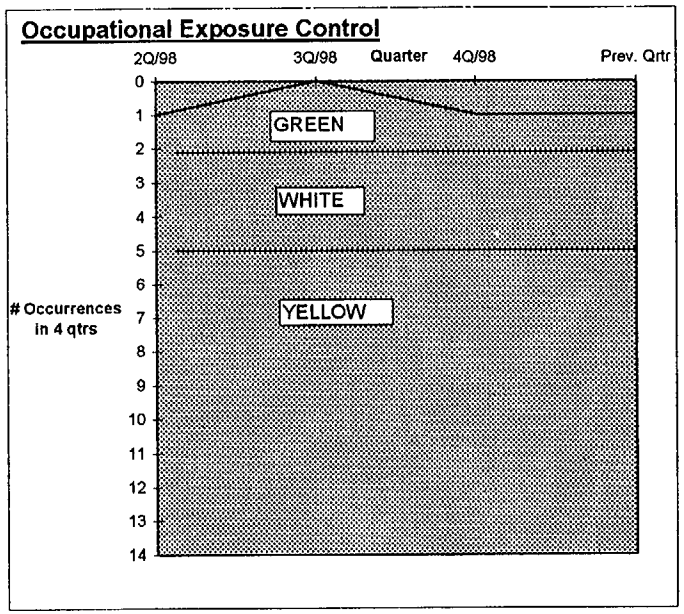

2.6 PUBLIC RADIATION SAFETY CORNERSTONE

RETS/ODCM RADIOLOGICAL EFFLUENT OCCURRENCE

Purpose

To assess the performance of the radiological effluent control program.

Indicator Definition

Radiological effluent release occurrences per site that exceed the values listed below:

Radiological effluent releases in excess of the following values:		
Liquid Effluents	Whole Body	1.5 mrem/qtr
	Organ	5 mrem/qtr
Gaseous Effluents	Gamma Dose	5 mrads/qtr
	Beta Dose	10 mrads/qtr
	Organ Doses from I-131, I-133, H-3 & Particulates	7.5 mrems/qtr

Note:
(1) Values are derived from the Radiological Effluent Technical Specifications (RETS) or similar reporting provisions in the Offsite Dose Calculation Manual (ODCM), if applicable RETS have been moved to the ODCM in accordance with Generic Letter 89-01.
(2) The dose values are applied on a per reactor unit basis in accordance with the RETS/ODCM.
(3) For multiple unit sites, allocation of dose on a per reactor unit basis from releases made via common discharge points is to be calculated in accordance with the methodology specified in the ODCM.

Data Reporting Elements

Number of RETS/ODCM Radiological Effluent Occurrences each quarter involving assessed dose in excess of the indicator effluent values.

Calculation

Number of RETS/ODCM Radiological Effluent Occurrences per site in the previous four quarters.

Definition of Terms

A RETS/ODCM Radiological Effluent Occurrence is defined as a release that exceeds any or all of the five identified values outlined in the above table. These are the whole body and organ dose values for liquid effluents and the gamma dose, beta dose, and organ dose values for gaseous effluents.

Clarifying Notes

The following conditions do not count against the RETS/ODCM Radiological Effluent Occurrence:

- Liquid or gaseous monitor operability issues
- Liquid or gaseous releases in excess of RETS/ODCM concentration or instantaneous dose-rate values
- Liquid or gaseous releases without treatment but that do not exceed values in the table

Not all effluent sample (e.g., composite sample analysis) results are required to be finalized at the time of submitting the quarterly PI reports. Therefore, the reports should be based upon the best-available data. If subsequently available data indicates that the number of occurrences for this PI is different than that reported, then the report should be revised, along with an explanation regarding the basis for the revision.

~~Frequently Asked Questions~~

~~ID~~ ~~Question~~

~~99~~ ~~The PI for RETS/ODCM radiological effluent occurrences includes the number of occurrences each quarter involving assessed dose in excess of the indicator values. However, some data utilized in assessing dose for radiological effluents may not be available at the time of making quarterly PI reports. For example, the analytical results for composite samples are typically not finalized within the PI reporting period following the end of the quarter. How should this be handled with regard to making the quarterly PI reports?~~

~~Response~~

~~It is understood that not all effluent sample results are required to be finalized at the time of submitting the quarterly PI reports. Therefore, the reports should be based upon the best-available data. If subsequently available data indicates that the number of occurrences for this PI is different that that reported, then the report should be revised, along with an explanation regarding the basis for the revision. From a practical perspective, it is very unlikely that the data that is typically not available at the time of PI reporting would have the effect of causing a change in the reported number of occurrences. The circumstances associated with an occurrence as defined in this PI would be expected to include numerous indications, not limited to composite sample analysis, that there was an occurrence, for example elevated RCS activity, transient events, and effluent radiation monitor indications.~~

1 **Data Example**

RESTS/ODCM Radiological Effluent Indicator											
Quarter					3Q/97	4Q/97	1Q/98	2Q/98	3Q/98	4Q/98	Prev. Q
Number of RETS/ODCM occurrences in the qtr					1	0	0	1	0	0	1
								2Q/98	3Q/98	4Q/98	Prev. Q
Number of RETS/ODCM occurrences in the previous 4 qtrs								2	1	1	2

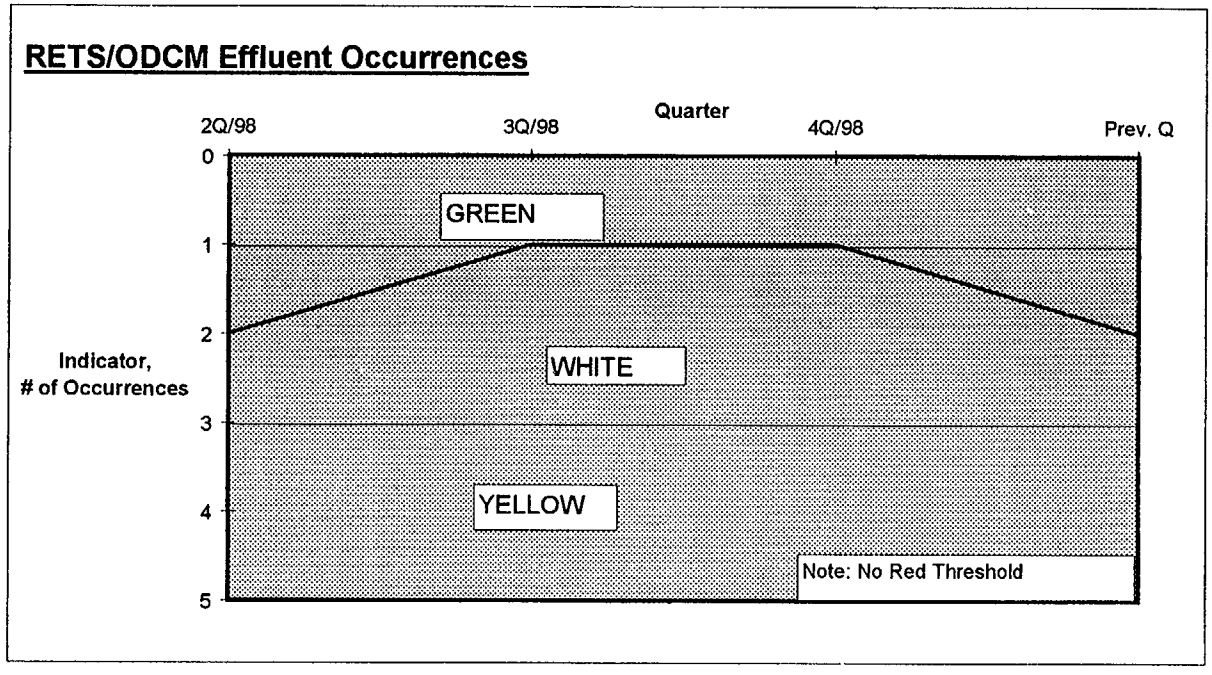

2

2.7 PHYSICAL PROTECTION CORNERSTONE

Performance indicators for this cornerstone were selected to provide baseline and trend information needed to evaluate each licensee's physical protection and access authorization systems. The regulatory purpose is to provide high assurance that these systems will function to protect against the design basis threat of radiological sabotage as defined in 10 CFR Part 73. As a surrogate to any engineered physical security protection system, posted security officers provide compensation when a portion of the system is unavailable to perform its intended function. The performance indicator value is not an indication that the protection afforded by the plant's physical security organization is less than required by the regulatory requirements.

An effective access authorization (AA) system minimizes the potential for an internal threat. Basic elements of this program are the personnel screening program, the fitness-for-duty (FFD) program and the continual behavior observation program (referred to as CBOP). When there has been a programmatic failure or significant degradation in the AA system, the licensee is required to take corrective action and report the event to the regulator. These reportable events are the basis for the performance indicators (PI) that are used to monitor program effectiveness.

There is one performance indicator for the physical protection system, and two indicators for access authorization. The performance indicators are assessed against established thresholds using the data and methodology as established in this guideline. The NRC baseline inspections will validate and verify the testing requirements for each system to assure performance standards and testing periodicity are appropriate to provide valid data.

<u>Performance Indicators</u>:
The three physical protection performance indicators are:

1. Protected Area Security Equipment Performance Index,
2. Personnel Screening Program Performance, and
3. Fitness-for-Duty (FFD)/Personnel Reliability Program Performance.

The first indicator serves as a measure of a plant's ability to maintain equipment—to be available to perform its intended function. When compensatory measures are employed because a segment of equipment is unavailable—not adequately performing its intended function, there is no security vulnerability but there is an indication that something needs to be fixed. The PI provides trend indications for evaluation of the effectiveness of the maintenance process, and also provides a method of monitoring equipment degradation as a result of aging that might adversely impact reliability. Maintenance considerations for protected area and vital area portals are appropriately and sufficiently covered by the inspection program.

The remaining two indicators measure significant programmatic deficiencies in the access and trustworthiness programs. These programs verify that persons granted unescorted access to the protected area have satisfactorily completed personal screening and, as a result, are considered to be trustworthy and reliable. Each indicator is based on the number of reportable events, required by regulation, that reveal significant problems in the management and operation of the licensee's access authorization or fitness-for-duty programs.

PROTECTED AREA (PA) SECURITY EQUIPMENT PERFORMANCE INDEX

Purpose:

Operability of the PA security system is necessary to detect and assess safeguards events and to provide the first line of the defense-in-depth physical protection of the plant perimeter. In the event of an attempted encroachment, the intrusion detection system identifies the existence of the threat, the barriers provide a delay to the person(s) posing the threat and the alarm assessment system is used to determine the magnitude of the threat. The PI is used to monitor the unavailability of PA intrusion detection systems and alarm assessment systems to perform their intended function.

Indicator Definition:

PA Security equipment performance is measured by an index that compares the amount of the time CCTVs and IDS are unavailable, as measured by compensatory hours, to the total hours in the period. A normalization factor is used to take into account site variability in the size and complexity of the systems.

Data Reporting Elements:

Report the following site data for the previous quarter for each unit:

- Compensatory hours, CCTVs: The hours (expressed to the nearest tenth of an hour) expended in posting a security officer as required compensation for camera(s) unavailability because of degradation or defects.
- Compensatory hours, IDS: The hours (expressed to the nearest tenth of an hour) expended in posting a security officer as required compensation for IDS unavailability because of degradation or defects.
- CCTV Normalization factor: The number of CCTVs divided by 30. If there are 30 or fewer CCTVs, a normalization factor of 1 should be used.
- IDS Normalization factor: The number of physical security zones divided by 20. If there are 20 or fewer zones, a normalization factor of 1 should be used.

Calculation

The performance indicator is calculated using values reported for the previous four quarters. The calculation involves averaging the results of the following two equations.

$$\text{IDS Unavailability Index} = \frac{\text{IDS Compensatory hours in the previous 4 quarters}}{\text{IDS Normalization Factor x 8760 hrs}}$$

$$\text{CCTV Unavailability Index} = \frac{\text{CCTV Compensatory hours in the previous 4 quarters}}{\text{CCTV Normalization Factor x 8760 hrs}}$$

$$\text{Indicator Value} = \frac{\text{IDS Unavilability Index} + \text{CCTV Unavailability Index}}{2}$$

Definition of Terms

Intrusion detection system (IDS) - E-fields, microwave fields, *etc.*

CCTV - The closed circuit television cameras that support the IDS.

Normalization factors - Two factors are used to compensate for larger than nominal size sites.

- *IDS Normalization Factor*: Using a nominal number of physical security zones across the industry, the normalization factor for IDS is twenty. If a site has twenty or fewer intrusion detection zones, the normalization factor will be 1. If a site has more zones than 20, the factor is the total number of site zones divided by 20 (*e.g.*, 50 ÷ 20 = 2.5).
- *CCTV Normalization Factor*: Using a nominal number of perimeter cameras across the industry, the normalization factor for cameras is 30. If a site has thirty or fewer perimeter cameras, the normalization factor is 1. If a site has more than 30 perimeter cameras, the factor is the total number of perimeter cameras divided by 30 (*e.g.*, 50 ÷ 30 = 1.7).

> Note: The normalization factors are general approximations and may be modified as experience in the pilot program dictates.

Compensatory measures: Measures used to meet physical security requirements pending the return of equipment to service. Protected Area protection is not diminished by the use of compensatory measures for equipment unavailability.

Compensatory man-hours: The man-hours (expressed to the nearest tenth of an hour) that compensatory measures are in place (posted) to address a degradation in the IDS and CCTV systems. When a portion of the system becomes unavailable—incapable of performing its intended function—and requires posting of compensatory measures, the compensatory man-hour clock is started. The period of time ends when the cause of the degraded state has been repaired, tested, and system declared operable.

If a zone is posted for a degraded IDS and a CCTV camera goes out in the same posted area , the hours for the posting of the IDS will not be double counted. However, if the IDS problem is

corrected and no longer requires compensatory posting but the camera requires posting, the hours will start to count for the CCTV category.

Equipment unavailability: When the system has been posted because of a degraded condition (unavailability), the compensatory hours are counted in the PI calculation. If the degradation is caused by environmental conditions, preventive maintenance or scheduled system upgrade, the compensatory hours are not counted in the PI calculation. However, if the equipment is degraded after preventive maintenance or periodic testing, compensatory posting would be required and the compensatory hours would count. Compensatory hours stop being counted when the equipment deficiency has been corrected, equipment tested and declared back in service.

Clarifying Notes

Compensatory posting:

- The posting for this PI is only for the protected area perimeter, not vital area doors or other places such posting may be required.

- Postings for IDS segments for false alarms in excess of security program limits would be counted in the PI.

- Some postings are the result of non-equipment failures, which may be the result of test/maintenance conditions. For example, in a situation where a part of the IDS is taken out-of-service to check a condition for a small number of false alarms, but not in excess of security program false alarm limits. The test results in a sensitivity adjustment but the equipment is operable on restoration, so the compensatory hours for this "precautionary" measure would not count. If there has been no equipment malfunction and the system would still have alarmed during intrusion (still capable of performing its intended function), then the compensatory hours that were established as part of the activity would not be counted. If the equipment is determined to have malfunctioned it is not operable and maintenance/repair is required, the hours would count.

- Compensatory hours expended to address simultaneous equipment problems (IDS & CCTV) are counted beginning with the initial piece of equipment that required compensatory hours. When this first piece of equipment is returned to service and no longer requires compensatory measures, the second covered piece of equipment carries the hours. If one IDS zone is required to be covered by more than one compensatory post, the total man-hours of compensatory action are to be counted. If multiple IDS zones are covered by one compensatory post, the man-hours are only counted once.

- IDS equipment issues that do not require compensatory hours would not be counted

- The PI metric is based on expended compensatory hours and starts when the IDS or CCTV is actually posted. There are no "fault exposure hours" or other consideration beyond the actual physical compensatory posting. Also, this indicator only uses compensatory man-hours to provide an indication of CCTV or IDS unavailability. If a Pan-Tilt-Zoom (PTZ) camera or

other non-personnel (no expended portion of a compensatory man-hour) item is used as the compensatory measure, it is not counted for this PI.

- In a situation where security persons are already in place at continuously manned remote location security booths around the perimeter of the site and there is a need to provide compensatory coverage for the loss of IDS equipment, security persons already in these booths can fulfill this function. More than one person can be assigned to provide the coverage, since more than one person may be readily available. Only the compensatory hours required by the CCTV/IDS circumstance should be counted toward this indicator even if the person was in position prior to the loss of equipment function.

- Compensatory hours for this PI cover hours expended in posting a security officer as required as compensation for IDS and/or CCTV unavailability because of a degradation or defect. If other problems (e.g., security computer or multiplexer) result in compensatory postings because the IDS/CCTV is no longer capable of performing its intended safeguards function, the hours would count. Equipment malfunctions that do not require compensatory posting are not included in this PI.

- If an ancillary system is needed to support proper operability of IDS or CCTV and it fails, and the supported system does not operate as intended, the hours would count. For example, a CCTV camera requires sufficient lighting to perform its function so that such a lighting failure would result compensatory hours counted for this PI.

Data reporting: For this performance indicator, rounding may be performed as desired provided it is consistent and the reporting hours are expressed to the nearest tenth of an hour. Information supporting performance indicators is reported on a per unit basis. For performance indicators that reflect site conditions (IDS or CCTV), this requires that the information be repeated for each unit on the site. The criterion for data reporting is from the time the failure or deficiency is identified to the time it is placed back in service.

Degradation: Required system/equipment/component is no longer available/capable of performing its intended safeguards function—manufacturer's equipment design capability and/or as covered in the PSP.

Extreme environmental conditions:

Compensatory hours do not count for extreme environmental c~~C~~onditions beyond the design specifications of the system, including severe storms, heavy fog, heavy snowfall, and sun glare that renders the IDS or CCTV temporarily inoperable. ~~However,~~ If ~~the equipment remains degraded~~ after the environmental condition~~s~~ ~~have ended,~~ clears, the zone remains unavailable, despite reasonable recovery efforts, the compensatory hours would ~~then~~ not begin to be counted until technically feasible corrective action could be completed. For example, a hurricane decimates a portion of the perimeter IDS and certain necessary components have to be obtained from the factory. Any restoration delay would be independent of the licensee's maintenance capability and therefore would not be counted in the indicator.

Other naturally occurring conditions that are beyond the control of the licensee, such as damage or nuisance alarms from animals are not counted.

Independent Spent Fuel Storage Installations (ISFSIs): This indicator does not include protective measures associated with such installations.

Intended function: The ability of a component to detect the presence of an individual or display an image as intended by manufacturer's equipment design capability and/or as covered in the PSP.

Operational support: E-fields or equivalent that are taken out of service to support plant operations and are not equipment failures but are compensatorily posted do not count for this PI.

Scheduled equipment upgrade:

- In the situation where system degradation results in a condition that cannot be corrected under the normal maintenance program (*e.g.*, engineering evaluation specifies the need for a system/component modification or upgrade), and the system requires compensatory posting, the compensatory hours stop being counted ~~for~~ toward the PI for those conditions addressed within the scope of the modification after such an evaluation has been made and the station has formally initiated a commitment in writing with descriptive information about the upgrade plan including scope of the project, anticipated schedule, and expected expenditures. This formally initiated upgrade is the result of established work practices to design fund, procure, install and test the project. A note should be made in the comment section of the PI submittal that the compensatory hours are being excluded under this provision. ~~the modification/upgrade action.~~ Compensatory hour counting resumes when the upgrade is complete and operating as intended as determined by site requirements for sign-off. Reasonableness should be applied with respect to a justifiable length of time the compensatory hours are excluded from the PI.

- For the case where there are a few particularly troubling zones that result in formal initiation of an entire system upgrade for all zones, counting compensatory hours would stop only for zones out of service for the upgrade. However, if subsequent failures would have been prevented by the planned upgrade those would also be excluded from the count. This exclusion applies regardless of whether the failures are in a zone that precipitated the upgrade action or not, as long as they are in a zone that will be affected by the upgrade, and the upgrade would have prevented the failure.

Preventive maintenance:

- Scheduled preventive maintenance (PM) on system/equipment/component to include probability and/or operability testing. Includes activities necessary to keep the system at the required functional level. Planned plant support activities are considered PM.

- If during preventive maintenance or testing, a camera does not function correctly, and can be compensated for by means other than posting an officer, no compensatory man-hours are counted.

- Predictive maintenance is treated as preventive maintenance. Since the equipment has not failed and remains capable of performing its intended security function, any maintenance performed in advance of its actual failure is preventive. It is not the intent to create a disincentive to performing maintenance to ensure the security systems perform at their peak reliability and capability.

~~The indicator does not include protective measures associated with Independent Spent Fuel Storage Installations (ISFSIs).~~

Scheduled system upgrade: Activity to improve, upgrade or enhance system performance, as appropriate, in order to be more effective in its reliability or capability.

~~Frequently Asked Questions~~

~~ID~~ ~~Question~~

~~57~~ ~~Reporting of Compensatory Hours for Multi-Unit Site~~

~~For a multi-unit site how are the CCTV and IDS Compensatory Hours to be reported? Are they reported under only 1 unit, all units, divided between the units, or separately as a site-wide program?~~

~~Response~~

~~Information supporting performance indicators is reported on a per unit basis. For performance indicators that reflect site conditions, this requires that the information be repeated for each unit on the site.~~

~~ID~~ ~~Question~~

~~59~~ ~~Comp Posting for Non-Failure of Equipment~~

~~For Security Intrusion Detection Systems (IDS), if the number of IDS segment false alarms exceeds 5 per hour, licensees declare the IDS segment inoperable (due to excessive false alarms. Note, these are not nuisance nor environmental alarms.), comp post the segment, repair/test the segment, return the segment to operable and remove the comp post. The question is, if an IDS segment is removed from service and comp posted, but the resultant maintenance does NOT disclose any malfunction and the system is returned to service with essentially no corrective maintenance (some minor tweaking of system sensitivity might be done since it is out of service, but for this discussion the sensitivity was not initially mis-set), do you count the comp posting hours against the metric.~~

~~Response~~

~~If there is no equipment malfunction and the system would still have alarmed during intrusion (still capable of performing its intended function), then the compensatory man hours that were established as part of a precautionary maintenance activity would not be counted.~~

~~ID~~ ~~Question~~

~~60~~ ~~Multiple Comp Postings for Single Equipment Failure~~

~~If two IDS segments can be covered by a single comp post (one watchperson) then the guidance says to only count one hour (don't double count the single post). What if one IDS segment must be covered by 2 or more comp posts (two or more watchpersons), do you count one hour or the hours expended by the watchpersons (i.e., 2 or more per hour).~~

~~Response~~

~~Total compensatory man hours should be counted. This performance indicator measures total man-hours of compensatory action vs. total hours of compensatory action.~~

1
2

~~ID~~ ~~Question~~

~~61~~ ~~Comp Hours for Multiple Equipment Failures~~

~~Compensatory hours are not double counted when compensatory measures are assigned to multiple points (i.e. a single officer spending 4 hours watching both a camera and a zone). However, where are the comp hours assigned, to the camera or the zone. What If 1 MSF (Member of the Security Force) spent a total of 12.5 hours (one standard shift) on compensatory measures for malfunctioning equipment (0530—1800). Of the 12.5 hours – 0530—1400 MSF compensated for zone 4 (IDS) totaling 8.5 hrs 0700—1200 MSF compensated for camera 4 (CCTV) totaling 5 hrs 0900—1800 MSF compensated for camera 5 (CCTV) totaling 9 hrs How should we divide the hours up?~~

~~Response~~

~~Compensatory hours expended to address multiple equipment problems are assigned based upon the piece of equipment that first required compensatory hours. When this first piece of equipment is returned to service and no longer requires compensatory measures, the second piece of equipment carries the hours, etc. In the offered example, IDS Zone 4 would be assigned 8.5 hours and CCTV camera 5 would be assigned 4 hours.~~

3

~~ID~~ ~~Question~~

~~68~~ ~~Compensator. Hours~~

~~If a compensatory measure such as positioning a Pan-Tilt-Zoom camera in an area that compensates for a out of service fixed zone camera, does that count against the Protected Area Security Equipment PI even though no additional man hours are required for the compensatory measure.~~

~~Response~~

~~This indicator utilizes compensatory man hours to provide an indication of CCTV and IDS unavailability. Other compensatory measures would not be counted as part of this indicator.~~

4

~~ID~~ ~~Question~~

~~77~~ ~~Compensator. Hours~~

~~A previous FAQ question (FAQ 60) discusses one Intrusion Detection System (IDS) segment that must be covered by two or more compensatory posts (two or more watch persons) and if you count one hour or the hours expended by the watchpersons (i.e. two or more per hour). The response states that total compensatory man hours should be counted and that this performance indicator measures total man hours of compensatory action vs. total hours of compensatory action. At our Station, we have a situation where security persons are already in place at continuously manned remote location security booths around the perimeter of the site. In the event of a need to provide compensatory coverage for the lost IDS equipment, security persons already in these booths can fulfill this function. More than one person can be assigned to provide the coverage, since more than one person may be readily available. The question now becomes, do we need to count all of the persons that have been assigned to fulfill the compensatory function when some of the persons may have been assigned when it was not necessary to do so, but was done as a matter of convenience.~~

~~Response~~

~~Only the required compensatory man hours should be counted. If more than one person is required to provide coverage due to the lost equipment, then the hours of each should be counted toward this indicator.~~

5

~~ID~~ ~~Question~~

~~80~~ ~~Compensatory Hours~~

~~A licensee performs a routine surveillance on a security Intrusion Detection System (IDS) or Closed Circuit TV (CCTV). During the surveillance, the equipment is determined to be inoperable (not capable of performing its intended safety function). When does the inoperability start.~~

~~Response~~

~~The metric is based on the comp hours and starts when the IDS or CCTV is actually posted. There is no "fault exposure hours" or other consideration beyond the actual physical compensatory posting.~~

1

~~ID~~ ~~Question~~

~~81~~ ~~Compensatory Hours~~

~~When determining the need to compensatory post an Intrusion Detection System when it can not perform its intended safety function, there are three types of failures: (1) inability to detect intrusion; (2) inability to detect IDS sabotage (i.e., tamper alarms); and (3) inability to note equipment problems (i.e., supervisory alarm). Clearly, items 1 and 2 are failures and compensatory hours should be counted; however, what about failures of the supervisory sub-system?~~

~~Response~~

~~IDS equipment issues that do not require compensatory hours would not be counted.~~

2

~~ID~~ ~~Question~~

~~82~~ ~~Preventive Maintenance~~

~~In the security equipment PI, the terms corrective maintenance and Preventive maintenance are used. However, there is another subset of maintenance—predictive maintenance—and it is not clear whether to consider it preventative (exempt) or corrective (non-exempt). Predictive maintenance occurs on equipment that is currently performing its intended safety function satisfactorily (i.e., can pass surveillances and is OPERABLE), but has exhibited symptoms of declining performance (i.e., increased false alarms may indicate the need for insulator cleaning in advance of the routine PM cleaning or before eventual failure due to salt buildup; or a weak line signal may indicate the desirability of computer board replacement in advance of waiting for board failure).~~

~~Response~~

~~Predictive maintenance is treated as preventive maintenance. Since the equipment has not failed (remains capable of performing its intended detection (safety) function), any maintenance performed in advance of its actual failure is preventive. It is not the NRC's intent to create a disincentive to performing maintenance to ensure the security systems perform at their peak reliability and capability.~~

3

4

~~ID~~ ~~Question~~

~~83~~ ~~Extreme Environmental Conditions~~

~~How must we address extreme environmental conditions. A steady rain is not a "severe storm". "Sun glare" is not an extreme condition. Excessive summer heat reflecting off of a hot roof that renders the IDS inoperable for brief periods, although not an extreme environmental condition, inhibits proper operation for several consecutive days at about the same time. What if a heavy rain leaves a puddle of water that makes the IDS inoperable for several hours. Conservatively reporting environmental effects on protection equipment could cause an indicator to be unacceptable. If the clarifying note addressed "adverse environmental conditions", all weather related degradations would not be counted.~~

~~**Response**~~
~~The clarifying note is intended to allow exemption of compensatory hours that are required due to environmental conditions that exist beyond the design specifications of the system. The question to ask is, "Is the system performing in accordance with its design specifications?" If the system is not designed to function during certain instances of sun glare, the hours do not have to count.~~

~~ID~~	~~Question~~
~~136~~	~~A CCTV camera is functioning properly, but lighting in an area is poor such that the camera cannot detect intrusion and compensatory actions are taken. do these hours count as part of the indicator?~~

~~**Response**~~
~~The camera requires lighting to perform its function, therefore the system is not operating as intended and the compensatory hours are counted.~~

~~ID~~	~~Question~~
~~137~~	~~Should compensatory hours for the security computer and multiplexers be counted on the PI data being submitted.~~

~~**Response**~~
~~Compensatory hours for this PI cover hours expended in posting a security officer as required compensation for IDS and/or CCTV unavailability because of a degradation or defect. If problems with the security computer or multiplexer result in compensatory postings because the IDS/CCTV is no longer capable of performing its intended safeguards function, the hours would count.~~

~~ID~~	~~Question~~
~~138~~	~~Do e-fields taken out of service to support plant operations (not failures) and where guards are posted, count as Security Equipment Performance indicator compensatory hours.~~

~~**Response**~~
~~No.~~

~~ID~~	~~Question~~
~~139~~	~~For the Security Equipment indicator, there is a paragraph entitled "Scheduled equipment upgrade". This paragraph requires that if a system cannot be corrected under normal maintenance program, compensatory hours stop being counted after a modification or upgrade has been initiated. For the case where there are a few particularly troubling zones that result in formal initiation of an entire system upgrade for all zones, should we stop counting compensatory hours for all zones until the upgrade is in place?~~

~~**Response**~~
~~No, only subsequent failures that would have been prevented by the planned upgrade are excluded from the count. This exclusion applies regardless of whether the failures are in a zone that precipitated the upgrade action or not, as long as they are in a zone that will be affected by the upgrade, and the upgrade would have prevented the failure.~~

~~ID~~	~~Question~~
~~140~~	~~Is the performance indicator for IDS strictly looking at the protected area boundary or are vital doors included?~~

~~**Response**~~

~~The Purpose paragraph establishes that the PI is for the plant perimeter.~~

~~ID~~	~~Question~~
~~141~~	~~NEI 99-02 guidance for the Protected Area Security Equipment Performance Indicator states that when extreme environmental conditions occur that render the IDS or CCTV temporarily inoperable, the compensatory hours are not counted. In summer months, the duration of environmental conditions is typically tied to the period of time associated with storm passage. In winter months, storm passage does not as clearly represent the duration, because significant accumulations of snow and ice can remain and be an impediment to system function far beyond the passage of the storm despite removal efforts. If the IDS and CCTV are not designed to operate under such conditions, should compensatory hours count?~~

~~**Response**~~

~~Unavailabilities due to environmental conditions beyond the design specification of the system are not counted. If after the environmental condition clears, the zone remains unavailable, despite reasonable recovery efforts, the hours do not have to be counted.~~

~~ID~~	~~Question~~
~~160~~	~~If a security officer is posted to comp. for two zones for 1 hour, do you count 1 or 2 compensatory hours?~~

~~**Response**~~

~~If one security officer is posted to watch two zones for one hour, one (1) hour applies to the PI.~~

1 **Data Example**

Protected Area Security Equipment Performance Indicator

Quarter	2Q/97	3Q/97	4Q/97	1Q/98	2Q/98	3Q/98	4Q/98	Prev. Q
IDS Compensatory Hours in the qtr	36	48	96	126	65	45	60	55
CCTV Compensatory Hours in the qtr	24	36	100	100	48	56	53	31
IDS Compensatory Hrs in previous 4 qtrs				306	335	332	296	225
CCTV Compensatory Hrs in the previous 4 qtrs				260	284	304	257	188
IDS Normalization Factor	1.05	1.05	1.05	1.05	1.1	1.1	1.1	1.1
CCTV normalization Factor	1.2	1.2	1.2	1.2	1.3	1.3	1.3	1.3
IDS Unavailability Index				0.033268	0.034765	0.034454	0.030718	0.02335
CCTV Unavailability Index				0.024734	0.024939	0.026695	0.022568	0.016509
					2Q/98	3Q/98	4Q/98	Prev. Q
Indicator Value				0.03	0.03	0.03	0.03	0.02

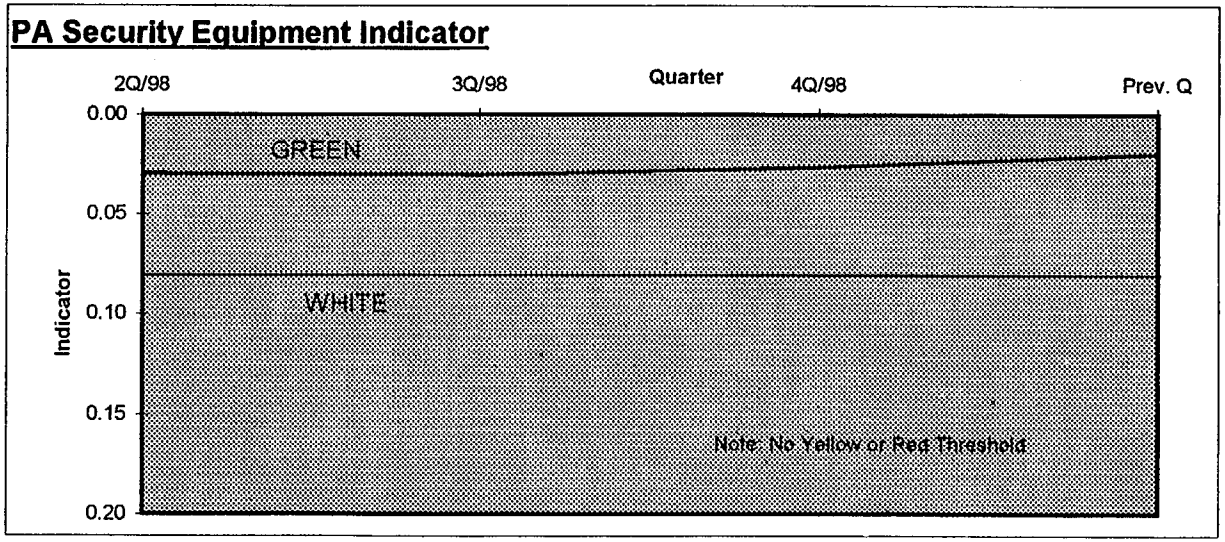

2

PERSONNEL SCREENING PROGRAM PERFORMANCE

Purpose:

The screening program performance indicator is used to verify that the unescorted access authorization program has been implemented pursuant to 10 CFR §§ 73.56 & 73.57 to evaluate trustworthiness of personnel prior to granting unescorted access to the protected area. The screening program includes psychological evaluation, an FBI criminal history check, a background check and reference check. The program should be able to verify that persons granted unescorted access to the protected area have satisfactorily completed personal screening and, as a result, are considered to be trustworthy and reliable.

Indicator Definition

The number of reportable failures to properly implement the regulatory requirements.

Data Reporting Elements

The number of failures to implement requirement(s) of 10 CFR Part 73.56 and 73.57 that were reportable during the previous quarter under 10 CFR Part 73 Appendix G.

Calculation:

The indicator is a summation of the values reported for the previous four quarters.

Definition of Terms:

Reportable event: - a failure in the licensee's program that requires prompt regulatory notification. This is in contrast to a loggable event, which is not considered significant.

Clarifying Notes:

~~This indicator does not include any reportable events that result from the program operating as intended.~~

The only reportable event is that defined in the PI - "a failure in the licensee's program that requires prompt regulatory notification." If you are not required to make a one-hour report concerning a significant failure to meet regulation it is not included for PI purposes. This indicator provides a measure of the effectiveness of programmatic efforts to implement regulatory requirements outlined in 10 CFR §§ 73.56 and 73.57 only and does not apply to the rest of Part 73. It does not include any reportable events that result from the program operating as intended. For example, if a background investigation reveals a significant event concerning a contract worker but unescorted access had not been granted and proper action was taken, this does not count as a data reporting element. It is not a failure to implement the requirements because the program functioned as implemented in compliance with the requirements.

Where a programmatic failure affected multiple sites, the instance is reported for each affected unit at each affected site.

The criterion for reporting of performance indicators is based on the time the failure or deficiency is identified.

~~Frequently Asked Questions~~

~~ID~~	~~Question~~
~~127~~	~~Clarifying Notes for both the Unescorted Access Authorization Program and FFD performance indicators imply that if an event is reported appropriately in accordance with either the reporting criteria of Part 26 or Part 73.55 then the program is working as designed and there is no event counted in the PI data. What then is the meaning/purpose of the sentence on page C-6 of the guidance document of the cornerstone document: "...data is currently available and there are regulatory requirements to report significant events"...?~~ ~~**Response**~~ ~~The sentence before the quoted piece used the term "program degradations." The intention is to keep the reported information in two groups:~~ ~~Specific reports required by regulation (e.g., operator tested positive for drugs) which means the program is working as intended and not to be included in the PI, and~~ ~~Significant programmatic failures of the implemented regulatory requirements that would amount to one hour type reports – these are the only reports included in the PIs for access authorization or fitness for duty.~~

~~ID~~	~~Question~~
~~128~~	~~For the Personnel Screening and Fitness for Duty indicator – it is not stated that the date to be used for reporting or what quarter to report an event in is the LER date. Is this an accurate assumption? This would be the same as the SSFF date requirement.~~ ~~**Response**~~ ~~The criterion for reporting of performance indicators is based on the time the failure or deficiency is identified, with the exception of the Safety System Functional Failure indicator, which is based on the Report Date of the LER.~~

~~ID~~	~~Question~~
~~133~~	~~Personnel Screening Program Performance indicator: As written in NEI 99-002 it appears that this indicator only applies to reportable conditions in 10 CFR 73.56 & 57, but it needs to be absolutely clear.~~ ~~**Response**~~ ~~The PI applies to § 73.56 and 73.57 and not to all of Part 73.~~

~~ID~~	~~Question~~
~~134~~	~~Should we include such things as "entry into a vital Area without proper authorization", or just the reporting requirements that would be reported if 10 CFR 73.56 or 10 CFR 73.57 were not met as outlined in Generic Letter 91-003 and NUREG 1304?"~~ ~~**Response**~~ ~~GL 91-03 and NUREG 1304 are not germane. The only Reportable event is that defined in the PI – "a failure in the licensee's program that requires prompt regulatory notification." If you did not make~~

~~a one hour report concerning a significant failure to meet regulation it is not included for PI purposes.~~

Data Examples

Personnel Screening Program Indicator

Quarter	2Q/97	3Q/97	4Q/97	1Q/98	2Q/98	3Q/98	4Q/98	Prev. Q
10 CFR §73.56 One Hr Reports	0	1	3	0	1	1	0	0
Reportable Events in previous 4 qtrs					2Q/98	3Q/98	4Q/98	Prev. Q
					5	5	2	2

Thresholds	
Green	≤2
White	>2
Yellow	>5

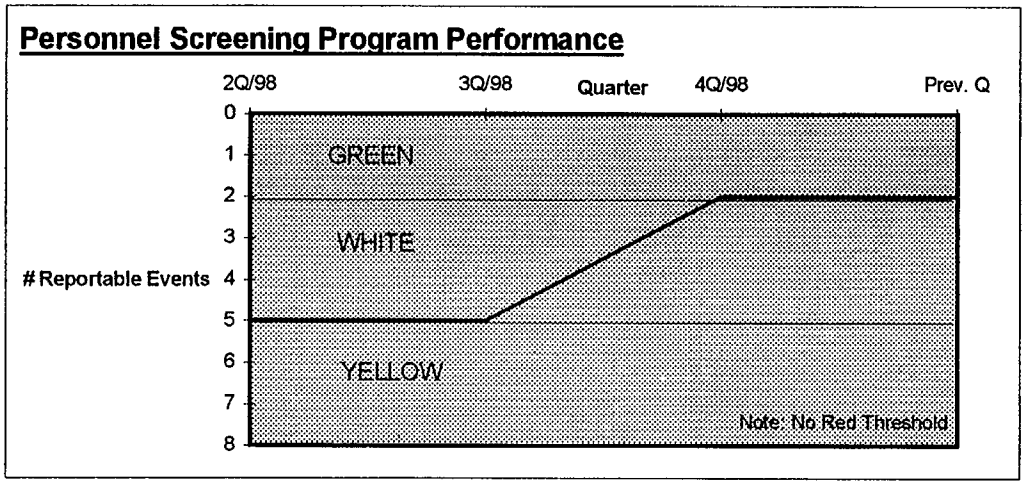

FITNESS-FOR-DUTY (FFD)/PERSONNEL RELIABILITY PROGRAM PERFORMANCE

Purpose:

The fitness-for-duty/personnel reliability program performance indicator is used to assess the implemented program for reasonable assurance that personnel are in compliance with associated requirements, 10 CFR Part 26 and § 73.56, to include: suitable inquiry, testing for substance abuse and behavior observation. This trustworthiness and reliability program is designed to minimize the potential for a person's performance or behavior to adversely affect his or her ability to safely and competently perform required duties.

Indicator Definition

The number of reportable failures to properly implement the requirements of 10 CFR Part 26 and 10 CFR 73.56.

Data Reporting Elements:

The number of failures to implement fitness-for-duty and behavior observation requirements, reportable during the previous quarter.

Calculation:

The indicator is a summation of the values reported for the previous four quarters.

Definition of Terms:

Reportable event: a failure in the licensee's program that requires prompt regulatory notification. This is in contrast to a loggable event, which is not considered significant.

Clarifying Notes:

This indicator provides a measure of the effectiveness of programmatic efforts to implement regulatory requirements outlined in 10 CFR Part 26 and Part 73.56 and does not include any reportable events that result from the program operating as intended. For example, if a contract supervisor is selected for a random drug test, tests positive, and proper action is taken, this does not count as a data reporting element. It is not a failure to implement the requirements because the program functioned as implemented in compliance with the requirements of 10 CFR Part 26.

Significant programmatic failures of the implemented regulatory requirements that would amount to one-hour type reports are the only reports included in the PIs for access authorization or fitness-for-duty.

Where a programmatic failure affected multiple sites, the instance is reported for each affected unit at each affected site.

The criterion for reporting of performance indicators is based on the time the failure or deficiency is identified.

~~Frequently Asked Questions~~

~~ID~~ ~~Question~~

~~58~~ ~~Reporting of FFD/Personnel Screening Data for Multi-Site Program~~
~~When reporting data for FFD/personnel screening for a multi-site company for which personnel are tested for both sites, how is the data reported?~~

~~Response~~
~~The Personnel Screening Program Performance Indicator provides a measure of the effectiveness of programmatic efforts to implement regulatory requirements outlined in 10 CFR Part 73. Where a programmatic failure affected (or had the potential to affect) multiple sites, the instance is reported for each affected unit.~~

~~ID~~ ~~Question~~

~~127~~ ~~Clarifying Notes for both the Unescorted Access Authorization Program and FFD performance indicators imply that if an event is reported appropriately in accordance with either the reporting criteria of Part 26 or Part 73.55 then the program is working as designed and there is no event counted in the PI data. What then is the meaning/purpose of the sentence on page C-6 of the guidance document of the cornerstone document: "....data is currently available and there are regulatory requirements to report significant events".....?~~

~~Response~~
~~The sentence before the quoted piece used the term "program degradations." The intention is to keep the reported information in two groups:~~
~~Specific reports required by regulation (e.g., operator tested positive for drugs) which means the program is working as intended and not to be included in the PI, and~~

- ~~Significant programmatic failures of the implemented regulatory requirements that would amount to one hour type reports – these are the only reports included in the PIs for access authorization or fitness for duty.~~

~~ID~~ ~~Question~~

~~128~~ ~~For the Personnel Screening and Fitness for Duty indicator – it is not stated that the date to be used for reporting or what quarter to report an event in is the LER date. Is this an accurate assumption? This would be the same as the SSFF date requirement.~~

~~Response~~
~~The criterion for reporting of performance indicators is based on the time the failure or deficiency is identified, with the exception of the Safety System Functional Failure indicator, which is based on the Report Date of the LER.~~

~~ID~~ ~~Question~~

~~129~~ ~~The clarifying note for the Fitness For Duty / Personnel Reliability Program Performance Indicator~~

~~states that the indicator does not include any reportable events that result from the program operating as intended. What is not clear is whether all 10 CFR Part 26 reportable events count as data reporting elements or not. For example, if a contract supervisor is selected for a random drug test, tests positive, and we take the proper action, does this count as a data reporting element or not? One could say that the random drug test failure is a failure to implement the requirements of 10 CFR Part 26. Alternatively, one could say that the program functioned as intended and we complied with the requirements of 10 CFR Part 26.~~

~~**Response**~~

~~No. The example would not count since the program was successful. Only count program failures.~~

Data Example

FFD/Personnel Reliability

Quarter	2Q/97	3Q/97	4Q/97	1Q/98	2Q/98	3Q/98	4Q/98	Prev. Q
10 CFR Part 26 Prompt Reports	0	1	1	0	0	1	0	0
					2Q/98	3Q/98	4Q/98	Prev. Q
Reportable Events in previous 4 qtrs					2	2	1	1
Thresholds								
Green	≤2							
White	>2							
Yellow	>5							
Red	N/A							

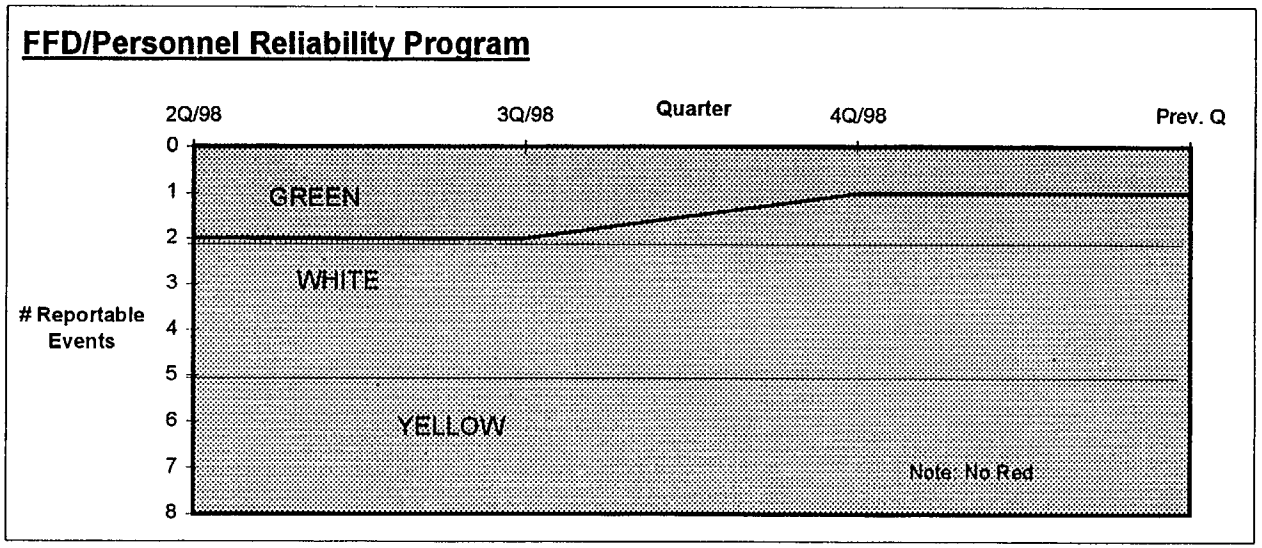

APPENDIX A

Acronyms & Abbreviations

AA	Access Authorization
AC	Alternating (Electrical) Current
AFW	Auxiliary Feedwater System
ALARA	As Low As Reasonably Achievable
ANS	Alert & Notification System
BWR	Boiling Water Reactor
CBOP	Behavior Observation Program
CFR	Code of Federal Regulations
CCTV	Closed Circuit Television
DC	Direct (Electrical) Current
DE & AEs	Drills, Exercises and Actual Events
EAL	Emergency Action Levels
EDG	Emergency Diesel Generator
EOF	Emergency Operations Facility
EFW	Emergency Feedwater
ERO	Emergency Response Organization
ESF	Engineered Safety Features
FBI	Federal Bureau of Investigations
FEMA	Federal Emergency Management Agency
FFD	Fitness for Duty
FSAR	Final Safety Analysis Report
FWCI	Feedwater Coolant Injection
IDS	Intrusion Detection System
ISFSI	Independent Spent Fuel Storage Installation
HPCI	High Pressure Coolant Injection
HPCS	High Pressure Core Spray
HPSI	High Pressure Safety Injection
HVAC	Heating, Ventilation and Air Conditioning
LER	Licensee event Report
LPCI	Low Pressure Coolant Injection
LPSI	Low Pressure Safety Injection
LOCA	Loss of Coolant Accident
MSIV	Main Steam Isolation Valve
N/A	Not Applicable
NEI	Nuclear Energy Institute
NRC	Nuclear Regulatory Commission
ODCM	Offsite Dose Calculation Manual
OSC	Operations Support Center
PA	Protected Area
PARs	Protective Action Recommendations
PI	Performance Indicator
PRA	Probabilistic Risk Analysis

1	PORV	Power Operated Relief Valve
2	PWR	Pressurized Water Reactor
3	RETS	Radiological Effluent Technical Specifications
4	RCIC	Reactor Core Isolation Cooling
5	RCS	Reactor Coolant System
6	RHR	Residual Heat Removal
7	SSFF	Safety System Functional Failure
8	SSU	Safety System Unavailability
9	TSC	Technical Support Center

APPENDIX B

STRUCTURE AND FORMAT OF NRC PERFORMANCE INDICATOR DATA FILES

Performance indicator data files submitted to the NRC as part of the Regulatory Oversight Process should conform to structure and format identified below. The NEI performance indicator Website (PIWeb) automatically produces files with structure and format outlined below.

File Naming Convention

Each NRC PI data file should be named according to the following convention. The name should contain the unit docket number, underscore, the date and time of creation and (if a change file) a "C" to indicate that the file is a change report. A file extension of .txt is used to indicate a text file.

Example: 05000399_20000103151710.txt

In the above example, the report file is for a plant with a docket number of 05000399 and the file was created on January 3, 2000 at 10 seconds after 3:17 p.m. The absence of a C at the end of the file name indicates that the file is a quarterly data report.

General Structure

Each line of the report begins with a left bracket (e.g., "[") and ends with a right bracket (e.g., "]"). Individual items of information on a line (elements) are separated by a vertical "pipe" (e.g., "|").

Each file begins with [BOF] as the first line and [EOF] as the last line. These indicate the beginning and end of the data file. The file may also contain one or more "buffer" lines at the end of the file to minimize the potential for file corruption. The second line of the file contains the unit docket number and the date and time of file creation (e.g., [05000399|1/2/2000 14:20:32]). Performance indicator information is contained beginning with line 3 through the next to last line (last line is [EOF]). The information contained on each line of performance indicator information consists of the performance indicator ID, applicable quarter/year (month/year for Barrier Integrity indicators), comments, and each performance indicator data element. Table B-1 provides a description of the data elements and order for each line of performance indicator data in a report file.

Example:
[IE01|3Q1998|Comments here|2|2400]

In the above example, the line contains performance indicator data for Unplanned Scrams per 7000 Critical Hours (IE01), during the 3rd quarter of 1998. The applicable comment text is "Comments here". The data elements identify that (see Table B-1) there were 2 unplanned automatic and manual scrams while critical and there were 2400 hours of critical operation during the quarter.

TABLE B-1 – PI DATA ELEMENTS IN NRC DATA REPORT

Performance Indicator	Data Element Number	Description
General Comment	1	Performance Indicator Flag (i.e., GEN)
	2	Report quarter and year (e.g., 1Q2000)
	3	Comment text
Unplanned Scrams per 7,000 Critical Hours	1	Performance Indicator Flag (i.e., IE01)
	2	Quarter and year (e.g., 1Q2000)
	3	Comment text
	4	Number of unplanned automatic and manual scrams while critical in the reporting quarter
	5	Number of hours of critical operation in the reporting quarter
Scrams with Loss of Normal Heat Removal	1	Performance Indicator Flag (i.e., IE02)
	2	Quarter and year (e.g., 1Q2000)
	3	Comment text
	4	The number of automatic and manual scrams while critical in the reporting quarter in which the normal heat removal path through the main condenser was lost
Unplanned Power Changes per 7,000 Critical Hours	1	Performance Indicator Flag (i.e., IE03)
	2	Quarter and year (e.g., 1Q2000)
	3	Comment text
	4	Number of unplanned power changes, excluding scrams, during the reporting quarter
	5	Number of hours of critical operation in the reporting quarter
Safety System Unavailability (SSU), Emergency AC Power System	1	Performance Indicator Flag (i.e., MS01)
	2	Quarter and year (e.g., 1Q2000)
	3	Comment text
	4	Planned Unavailable Hours
	5	Unplanned Unavailable Hours
	6	Fault Exposure Unavailable Hours
	7	Hours Train Required for Service
	*	Items 4 to 7 are repeated for each train
Safety System Unavailability (SSU), High Pressure Injection System	1	Performance Indicator Flag (i.e., MS02)
	2	Quarter and year (e.g., 1Q2000)
	3	Comment text
	4	Planned Unavailable Hours
	5	Unplanned Unavailable Hours
	6	Fault Exposure Unavailable Hours
	7	Hours Train Required for Service
	*	Items 4 to 7 are repeated for each train
Safety System Unavailability (SSU), Heat Removal System	1	Performance Indicator Flag (i.e., MS03)
	2	Quarter and year (e.g., 1Q2000)
	3	Comment text

Performance Indicator	Data Element Number	Description
	4	Planned Unavailable Hours
	5	Unplanned Unavailable Hours
	6	Fault Exposure Unavailable Hours
	7	Hours Train Required for Service
	*	Items 4 to 7 are repeated for each train
Safety System Unavailability (SSU), Residual Heat Removal System	1	Performance Indicator Flag (i.e., MS04)
	2	Quarter and year (e.g., 1Q2000)
	3	Comment text
	4	Planned Unavailable Hours
	5	Unplanned Unavailable Hours
	6	Fault Exposure Unavailable Hours
	7	Hours Train Required for Service
	*	Items 4 to 7 are repeated for each train
Safety System Functional Failures	1	Performance Indicator Flag (i.e., MS05)
	2	Quarter and year (e.g., 1Q2000)
	3	Comment text
	4	Number of safety system functional failures during the reporting quarter
Reactor Coolant System Activity (RCSA)	1	Performance Indicator Flag (i.e., BI01)
	2	Month and year (e.g., 3/2000)
	3	Comment text
	4	Maximum calculated RCS activity, in micro curies per gram dose equivalent Iodine 131, as required by technical specifications, for reporting month
	5	Technical Specification limit for RCS activity in micro curies per gram does equivalent Iodine 131
Reactor Coolant System Identified Leakage (RCSL)	1	Performance Indicator Flag (i.e., BI02)
	2	Month and year (e.g., 3/2000)
	3	Comment text
	4	Maximum RCS Identified Leakage calculation for reporting month in gpm
	5	Technical Specification limit for RCS Identified Leakage in gpm
Emergency Response Organization Drill/Exercise Performance	1	Performance Indicator Flag (i.e., EP01)
	2	Quarter and year (e.g., 1Q2000)
	3	Comment text
	4	Number of drill, exercise and actual event opportunities performed timely and accurately during the reporting quarter
	5	Number of drill, exercise and actual event opportunities during the reporting quarter
Emergency Response Organization (ERO) Participation	1	Performance Indicator Flag (i.e.,EP02)
	2	Quarter and year (e.g., 1Q2000)
	3	Comment text
	4	Total Key ERO members that have participated in a drill, exercise, or actual event in the previous 8 qrtrs
	5	Total number of Key ERO personnel at end of reporting quarter

Performance Indicator	Data Element Number	Description
Alert & Notification System Reliability	1	Performance Indicator Flag (i.e., EP03)
	2	Quarter and year (e.g., 1Q2000)
	3	Comment text
	4	Total number of successful ANS siren-tests during the reporting quarter
	5	Total number of ANS sirens tested during the reporting quarter
Occupational Exposure Control Effectiveness	1	Performance Indicator Flag (i.e., OR01)
	2	Quarter and year (e.g., 1Q2000)
	3	Comment text
	4	Number of technical specification high radiation area occurrences during the reporting quarter
	5	Number of very high radiation area occurrences during the reporting quarter
	6	The number of unintended exposure occurrences during the reporting quarter
RETS/ODCM Radiological Effluent Indicator	1	Performance Indicator Flag (i.e., PR01)
	2	Quarter and year (e.g., 1Q2000)
	3	Comment text
	4	Number of RETS/ODCM occurrences in the quarter
Protected Area Security Equipment Performance Indicator	1	Performance Indicator Flag (i.e., PP01)
	2	Quarter and year (e.g., 1Q2000)
	3	Comment text
	4	IDS Compensatory Hours in the quarter
	5	CCTV Compensatory Hours in the quarter
	6	IDS Normalization Factor
	7	CCTV Normalization Factor
Personnel Screening Program Indicator	1	Performance Indicator Flag (i.e., PP02)
	2	Quarter and year (e.g., 1Q2000)
	3	Comment text
	4	10 CFR §73.56 One Hr Reports
FFD/Personnel Reliability	1	Performance Indicator Flag (i.e., PP03)
	2	Quarter and year (e.g., 1Q2000)
	3	Comment text
	4	Number of failures to implement fitness-for-duty and behavior observation requirements, reportable during the reporting quarter.

APPENDIX C

Background Information and Cornerstone Development

INTRODUCTION

This section discusses the overall objectives and basis for the performance indicators used for each of the seven ~~six~~ cornerstone areas. A more in-depth discussion of the background behind each of the performance indicators identified in the main report may be found in SECY 99-07.

INITIATING EVENTS CORNERSTONE

GENERAL DESCRIPTION

The objective of this cornerstone is to limit the frequency of those events that upset plant stability and challenge critical safety functions, during shutdown as well as power operations. When such an event occurs in conjunction with equipment and human failures, a reactor accident may occur. Licensees can therefore reduce the likelihood of a reactor accident by maintaining a low frequency of these initiating events. Such events include reactor trips due to turbine trip, loss of feedwater, loss of offsite power, and other reactor transients. There are a few key attributes of licensee performance that determine the frequency of initiating events at a plant.

PERFORMANCE INDICATORS

PRAs have shown that risk is often determined by initiating events of low frequency, rather than those that occur with a relatively higher frequency. Such low-frequency, high-risk events have been considered in selecting the PIs for this cornerstone. All of the PIs used in this cornerstone are counts of either initiating events, or transients that could lead to initiating events (see Table 1). They have face validity for their intended use because they are quantifiable, have a logical relationship to safety performance expectations, are meaningful, and the data are readily available. The PIs by themselves are not necessarily related to risk. They are however, the first step in a sequence which could, in conjunction with equipment failures, human errors, and off-normal plant configurations, result in a nuclear reactor accident. They also provide indication of problems that, if uncorrected, increase the risk of an accident. In most cases, where PIs are suitable for identifying problems, they are sufficient as well, since problems that are not severe enough to cause an initiating event (and therefore result in a PI count) are of low risk significance. In those cases, no baseline inspection is required (the exception is shutdown configuration control, for which supplemental baseline inspections is necessary).

MITIGATING SYSTEMS CORNERSTONE

GENERAL DESCRIPTION

The objective of this cornerstone is to ensure the availability, reliability, and capability of systems that respond to initiating events to prevent undesirable consequences (i.e., core damage). When such an event occurs in conjunction with equipment and human failures, a reactor accident may result. Licensees therefore reduce the likelihood of reactor accidents by enhancing the availability and reliability of mitigating systems. Mitigating systems include those systems associated with safety injection, residual heat removal, and emergency AC power. This cornerstone includes mitigating systems that respond to both operating and shutdown events.

PERFORMANCE INDICATORS

While safety systems and components are generally thought of as those that are designed for design-basis accidents, not all mitigating systems have the same risk importance. PRAs have shown that risk is often influenced not only by front-line mitigating systems, but also by support systems and equipment. Such systems and equipment, both safety- and nonsafety-related, have been considered in selecting the PIs for this cornerstone. The PIs are all direct counts of either mitigating system availability or reliability or surrogates of mitigating system performance. They have face validity for their intended use because they are quantifiable, have a logical relationship to safety performance expectations, are meaningful, and the data are readily available. Not all aspects of licensee performance can be monitored by PIs. Risk-significant areas not covered by PIs will be assessed through inspection.

BARRIER INTEGRITY CORNERSTONE

GENERAL DESCRIPTION

The purpose of this cornerstone is to provide reasonable assurance that the physical design barriers (fuel cladding, reactor coolant system, and containment) protect the public from radionuclide releases caused by accidents or events. These barriers play an important role in supporting the NRC Strategic Plan goal for nuclear reactor safety, "Prevent radiation-related deaths or illnesses due to civilian nuclear reactors." The defense in depth provided by the physical design barriers which comprise this cornerstone allow achievement of the reactor safety goal.

PERFORMANCE INDICATORS

The performance indicators for this cornerstone cover two of the three physical design barriers. The first barrier is the fuel cladding. Maintaining the integrity of this barrier prevents the release of radioactive fission products to the reactor coolant system, the second barrier. Maintaining the integrity of the reactor coolant system reduces the likelihood of loss of coolant accident initiating events and prevents the release of radioactive fission products to the containment atmosphere in transients and other events. Performance indicators for reactor coolant system activity and reactor coolant system leakage monitor the integrity of the first two physical design barriers. Even if significant quantities of radionuclides are released into the containment atmosphere, maintaining the integrity of the third barrier, the containment, will limit radioactive releases to the environment

and limit the threat to the public health and safety. The integrity of the containment barrier is ensured through the inspection process.

Therefore, there are three desired results associated with the barrier integrity cornerstone. These are to maintain the functionality of the fuel cladding, the reactor coolant system, and the containment.

EMERGENCY PREPAREDNESS CORNERSTONE

GENERAL DESCRIPTION

Emergency Preparedness (EP) is the final barrier in the *defense in depth* approach to safety that NRC regulations provide for ensuring the adequate protection of the public health and safety. Emergency Preparedness is a fundamental cornerstone of the Reactor Safety Strategic Performance Area. 10 CFR Part 50.47 and Appendix E to Part 50, define the requirements of an EP program and a licensee commits to implementation of these requirements through an Emergency Plan (the Plan). The performance indicators for this cornerstone are designed to ensure that the licensee is capable of implementing adequate measures to protect the public health and safety in the event of a radiological emergency.

PERFORMANCE INDICATORS

Compliance of EP programs with regulation is assessed through observation of response to simulated emergencies and through routine inspection of onsite programs. Demonstration exercises involving onsite and offsite programs, form the key observational tool used to support, on a continuing basis, the reasonable assurance finding that *adequate protective measures can and will be taken in the event of a radiological emergency*. This is especially true for the most risk significant facets of the EP program. This being the case, the PIs for onsite EP draw significantly from performance during simulated emergencies and actual declared emergencies, but are supplemented by direct NRC inspection and inspection of licensee self assessment. NRC assessment of the adequacy of offsite EP will rely (as it does currently) on regular FEMA evaluations.

OCCUPATIONAL EXPOSURE CORNERSTONE

GENERAL DESCRIPTION

This cornerstone includes the attributes and the bases for adequately protecting the health and safety of workers involved with exposure to radiation from licensed and unlicensed radioactive material during routine operations at civilian nuclear reactors. The desired result is the adequate protection of worker health and safety from this exposure. The cornerstone uses as its bases the occupational dose limits specified in 10 CFR 20 Subpart C and the operating principle of maintaining worker exposure "as low as reasonably achievable (ALARA)" in accordance with 10 CFR 20.1101. These radiation protection criteria are based upon the assumptions that a linear relationship, without threshold, exists between dose and the probability of stochastic health effects (radiological risk); the severity of each type of stochastic health effect is independent of dose; and

nonstochastic radiation-induced health effects can be prevented by limiting exposures below thresholds for their induction. Thus, 10 CFR Part 20 requires occupational doses to be maintained ALARA with the exposure limits defined in 10 CFR 20 Subpart C constituting the maximum allowable radiological risk. Industry experience has shown that the occurrences of uncontrolled occupational exposure that potentially could result in an individual exceeding a dose limit have been low frequency events. These potential overexposure incidents are associated with radiation fields exceeding 1000 millirem per hour (mrem/hr) and have involved the loss of one or more radiation protection controls (barriers) established to manage and control worker exposure. The probability of undesirable health effects to workers can be maintained within acceptable levels by controlling occupational exposures to radiation and radioactive materials to prevent regulatory overexposures and by implementing an aggressive and effective ALARA program to monitor, control and minimize worker dose.

PERFORMANCE INDICATORS

A combined performance indicator is used to assess licensee performance in controlling worker doses during work activities associated with high radiation fields or elevated airborne radioactivity areas. The PI was selected based upon its ability to provide an objective measure of an uncontrolled measurable worker exposure or a loss of access controls for areas having radiation fields exceeding 1000 millirem per hour (mrem/hr). The data for the PI are currently being collected by most licensees in their corrective action programs. The PI either directly measures the occurrence of unanticipated and uncontrolled dose exceeding a percentage of the regulatory limits or identifies the failure of barriers established to prevent unauthorized entry into those areas having dose rates exceeding 1000 mrem/hr. The indicator may identify declining performance in procedural guidance, training, radiological monitoring, and in exposure and contamination control prior to exceeding a regulatory dose limit. The effectiveness of the licensee's assessment and corrective action program is considered a cross-cutting issue and is addressed elsewhere.

PUBLIC EXPOSURE CORNERSTONE

GENERAL DESCRIPTION

This cornerstone includes the attributes and the bases for adequately protecting public health and safety from exposure to radioactive material released into the public domain as a result of routine civilian nuclear reactor operations. The desired result is the adequate protection of public health and safety from this exposure. These releases include routine gaseous and liquid radioactive effluent discharges, the inadvertent release of solid contaminated materials, and the offsite transport of radioactive materials and wastes. The cornerstone uses as its bases, the dose limits for individual members of the public specified in 10 CFR 20, Subpart D; design objectives detailed in Appendix I to 10 CFR Part 50 which defines what doses to members of the public from effluent releases are "as low as reasonably achievable" (ALARA); and the exposure and contamination limits for transportation activities detailed in 10 CFR Part 71 and associated Department of Transportation (DOT) regulations. These radiation protection standards require doses to the public be maintained ALARA with the regulatory limits constituting the maximum allowable radiological risk based on the linear relationship between dose received and the probability of adverse health effects.

PERFORMANCE INDICATORS

One PI for the radioactive effluent release program has been initially developed to monitor for inaccurate or increasing projected offsite doses. The effluent radiological occurrence (ERO) PI does not evaluate performance of the radiological environmental monitoring program (REMP) which will be assessed through the routine baseline inspection. For transportation activities, the infrequent occurrences of elevated radiation or contamination limits in the public domain from this measurement area precluded identification of a corresponding indicator. A second PI has been proposed for future use to monitor the inadvertent release of potentially contaminated materials which could result in a measurable dose to a member of the public. These indicators will provide partial assessments of licensee radioactive effluent monitoring and offsite material release activities and were selected to identify decreasing performance prior to exceeding public regulatory dose limits.

PHYSICAL SECURITY CORNERSTONE

GENERAL DESCRIPTION

This cornerstone addresses the attributes and establishes the basis to provide assurance that the physical protection system can protect against the design basis threat of radiological sabotage as defined in 10 CFR 73.1(a). The key attributes in this cornerstone are based on the defense in depth concept and are intended to provide protection against both external and internal threats. To date, there have been no attempted assaults with the intent to commit radiological sabotage and, although there has been no PRA work done in the area of safeguards, it is assumed that there exists a small probability of an attempt to commit radiological sabotage. Although radiological sabotage is assumed to be a small probability, it is also assumed to be risk significant since a successful sabotage attempt could result in initiating an event with the potential for disabling of the safety systems necessary to mitigate the consequences of the event with substantial consequence to public health and safety. An effective security program decreases the risk to public health and safety associated with an attempt to commit radiological sabotage.

PERFORMANCE INDICATORS

Three performance indicators are used to assess licensee performance in the Physical Protection and Access Authorization Systems. The PIs were selected based on their ability to provide objective measures of performance.

The performance of the physical protection system will be measured by the percent of the time all components (barriers, alarms and assessment aids) in the systems are available and capable of performing their intended function. When systems are not available and capable of performing their intended function, compensatory measures must be implemented. Compensatory measures are considered acceptable pending equipment being returned to service, but historically have been found to degrade over time. The degradation of compensatory measures over time, along with the additional costs associated with implementation of compensatory measures provides the incentive for timely maintenance/I&C support to return equipment to service. The percent of time equipment is available and capable of performing its intended function will provide data on the

effectiveness of the maintenance process and also provide a method of monitoring equipment degradation as a result of aging that could adversely impact on reliability.

Two performance indicators are used to measure the Assess Authorization System. The performance indicators for this system will count the number of reportable events that reflect program degradations. This data is currently available and there are regulatory requirements to report significant events in the areas of Personnel Screening and FFD. The Behavior Observation significant events are captured in the FFD reporting requirements.

~~GENERAL FAQS~~

~~This section provides a general discussion of the Performance Indicator (PI) portion of the oversight and assessment process in a question/answer format.~~

~~HOW WILL PERFORMANCE INDICATORS BE USED? (FAQ ID 113)~~

~~Nuclear plant performance will be measured by a combination of objective performance indicators and by the NRC inspection program which will be refocused on those plant activities which have the greatest impact on safety and overall risk.~~

~~Performance indicators use objective data to monitor each of the "cornerstone" areas. The data that make up the performance indicators will be generated by the utilities and submitted to the NRC. The NRC will also monitor plant activities through its inspection program both to verify the accuracy of the performance indicator information and to assess performance that is not measured by the performance indicators.~~

~~NRC activities beyond baseline inspection activities will be based upon licensee performance as measured by the performance indicators in conjunction with results from baseline inspection activities. Four performance thresholds have been established to allow unambiguous observation and assessment of declining (or improving) performance. The *Licensee Response Band* (or GREEN band) is characterized by acceptable performance in which cornerstone objectives are met. Performance problems would not be of sufficient significance that escalated NRC engagement would occur. Licensees would have maximum flexibility to manage corrective action initiatives. The *Increased Regulatory Response Band* (or WHITE band) would be entered when licensee performance is outside the normal performance range, but would still represent an acceptable level of performance, but there is indication of declining performance and reduced safety limits. The *Required Regulatory Response Band* (or YELLOW band) involves more significant decline in performance but licensee performance is, in general, still considered acceptable, if marginal. The *Unacceptable Performance Band* (or RED band) is entered when performance falls below the YELLOW band threshold. Plant performance is considered to be significantly outside the design basis, with unacceptable margin(s) to safety, with an accompanied loss of confidence that public health and safety would be assured with continued operation. It should be noted that although not expected, should a licensee's performance reach what has been determined to be an unacceptable level, margin would still exist before an undue risk to public health and safety would be presented. The extent of NRC actions would be graded based upon the relative deviation from the performance indicator threshold and the number of thresholds exceeded. A complete listing of the performance indicators selected for each cornerstone, along with performance thresholds is provided in Table 1 in the main body of this report.~~

~~WHAT IS THE GENERAL INTENT OF PERFORMANCE INDICATORS? (FAQ ID 114)~~

~~Performance indicators together with risk-informed baseline inspections, are intended to provide a broad sample of data to assess licensee performance in the risk significant areas of each cornerstone. They are not intended to provide complete coverage of every aspect of plant design and operation. It is recognized that licensees have the primary responsibility for ensuring the safety of the facility. Objective performance evaluation thresholds are intended to be used to help determine the level of regulatory engagement appropriate to licensee performance in each cornerstone area. Furthermore, based on past experience it is expected that a limited number of risk-significant events will continue to occur with little or no indication of declining performance. Follow-up inspections will be conducted to ensure that the cause of the event is well understood and licensee corrective actions are adequate to prevent recurrence. The results of these follow-up inspections will be factored into the assessment process along with performance indicators and risk informed baseline inspections.~~

~~HOW WERE THE PERFORMANCE INDICATORS DETERMINED? (FAQ ID 115)~~

~~Where possible, the NRC sought to identify performance indicators as a means of measuring the performance of key attributes in each of the cornerstone areas. In selecting performance indicators, the NRC tried to select indicators that: (1) were capable of being objectively measured; (2) allowed for the establishment of a risk-informed threshold to guide NRC and licensee actions; (3) provided a reasonable sample of performance in the area being measured; (4) represented a valid and verifiable indication of performance in the area being measured; (5) would encourage appropriate licensee and NRC actions; and (6) would provide sufficient time for the NRC and licensees to correct performance deficiencies before the deficiencies posed an undue risk to public health and safety. Where such a performance indicator could not be identified, "complementary" inspection activity will be used. Where a performance indicator was identified but was not sufficiently comprehensive to cover all performance areas to be measured, the NRC will use "supplementary" inspection activities. The NRC also identified areas where "verification" type inspections will be performed to verify the accuracy and completeness of the reported performance indicator data.~~

~~HOW WERE THE PERFORMANCE INDICATOR THRESHOLDS VALUES ESTABLISHED? (FAQ ID 116)~~

~~For two PIs (transients and safety system failures), no thresholds have been identified for the Required Regulatory Response Band or the Unacceptable Performance Band because the indicators could not be directly tied to risk data. These two indicators have provided good correlation with plant performance in the past and they are considered to be leading indicators of the more risk-significant indicators (scrams, risk-significant scrams, and SSU). The barrier integrity cornerstone PIs (RCS activity and RCS leak rate) do not have thresholds identified for the Unacceptable Performance Band because their lower thresholds are based on regulatory requirements (technical specifications). Individual plant technical specifications would require plant shutdown within a short time after the regulatory limits were exceeded. The emergency preparedness, radiation safety, and safeguards cornerstones do not have thresholds identified for the Unacceptable Performance Band. There is no risk basis for a determination that a certain degraded level of performance reflected by these indicators can be correlated into mandatory plant shutdown. It is expected that declining performance in the areas monitored by these indicators~~

~~would be arrested by increased licensee corrective actions and by increased NRC attention up to and including the issuance of orders.~~

~~For some indicators, such as those for scrams and safety system unavailability, selection of the performance indicator thresholds was made using the insights from probabilistic risk assessment (PRA) sensitivity analysis. Other performance indicator thresholds could not be assessed using PRA models. In such cases, the performance indicator thresholds were tied to regulatory requirements or were based on the professional judgment of the NRC staff and industry. For example, under the barrier integrity cornerstone, reactor coolant system activity is a good measure of the integrity of the fuel cladding, but the performance thresholds chosen were based on technical specifications. Under the physical security cornerstone, the availability of physical protection systems provides a useful measure of the status of intrusion detection equipment, but its thresholds were chosen based on professional judgment of the NRC staff and industry representatives. Additional information on the establishment of thresholds for individual performance indicators is provided in SECY-99-007.~~

~~HOW DO THE THRESHOLDS COMPARE WITH PAST INDUSTRY PERFORMANCE? (FAQ ID 117)~~

~~Following selection of performance indicators and corresponding thresholds, the NRC performed a benchmarking analysis to compare the indicators against several plants that had been previously designated by the agency as having either poor, declining, average, or superior performance. The analysis indicated that the performance indicators could generally differentiate between poor and superior plants, but were not as effective at differentiating average levels of performance. The transients and safety system failure performance indicators appeared to be the most closely tied with prior NRC judgments about performance. In some instances, the cause of the plants rated poorly by the agency was due to design or other issues for which valid performance indicators have not been developed. It is expected that these plants would continue to be identified by the inspection program.~~

~~The NRC also identified aspects of licensee performance such as human performance, the establishment of a safety conscious work environment, common cause failure, and the effectiveness of licensee problem identification and corrective action programs, that are not identified as specific cornerstones, but are important to meeting the safety mission. The NRC concluded that these items generally manifest themselves as the root causes of performance problems. Adequate licensee performance in these crosscutting areas will be assessed either explicitly in each cornerstone area or will be inferred through cornerstone performance results from both PIs and inspection results.~~

~~Lastly, the selected PIs were put through a benchmarking exercise that involved evaluation of an industry-sponsored assessment and independent NRC staff analyses. This benchmarking was performed for a selection of plants with a history of poor, declining, average, and superior performance as determined by the NRC's senior management meetings.~~

~~WILL THE THRESHOLD VALUES CHANGE? (FAQ ID 118)~~

~~The current assessment of PI thresholds is based on a relatively small number of sensitivity studies, using PRA models of differing levels of detail. They show significant differences in results. The selected threshold values are somewhat conservative for most but not all plants. Efforts are~~

~~underway to better understand these results, and to determine whether the thresholds should be modified or whether separate thresholds should be established for plant classes.~~

~~ARE OTHER INDICATORS BEING DEVELOPED? (FAQ ID 119)~~

~~Several additional PIs have been proposed, however further work is needed to determine whether these proposed PIs are viable and can provide meaningful licensee performance insights. These new indicators will either augment or replace existing indicators and when implemented will likely reduce activities currently addressed through the baseline inspection program.~~

~~An indicator is being developed to address shutdown operations as part of the Initiating Event Cornerstone. This indicator would count the events that jeopardize the capability to remove decay heat from the reactor while shut down or could lead to unplanned criticality. Experience has shown that plant activities while shut down with safety equipment out of service can, under certain circumstances, have serious consequences. It is important that reactor coolant level and temperature be controlled to maintain the heat removal capability and to prevent inadvertent criticality.~~

~~An indicator is being developed to measure the reliability of the safety significant systems currently being measured by the Safety System Unavailability performance indicator and an separate indicator is also being developed to measure the availability of key safety system functions during shutdown operations.~~

~~IS THERE A PROCESS THAT WILL ALLOW THE NRC TO SEE DECREASING PERFORMANCE EVEN IF THE UTILITY STAYS GREEN? (FAQ ID 120)~~

~~The Performance Indicators are only a part of the overall oversight process. A "green" performer should be allowed to identify and correct perceived problems. The utility's process of identifying problems and the timeliness of corrective actions will be inspected.~~

~~INDIVIDUAL PLANT EXAMINATIONS (IPEs) WERE ESTABLISHED USING A CERTAIN SET OF PRA ASSUMPTIONS. THESE INCLUDED ASSUMPTIONS REGARDING THE AVAILABILITY OF EQUIPMENT THAT PERFORM SAFETY FUNCTIONS. THE CRITERIA USED FOR AVAILABILITY DECISIONS HAVE VARYING DEGREES OF CONSERVATISM FROM PLANT TO PLANT. IN SOME CASES, THESE CRITERIA MAY BE LESS STRINGENT THAN CRITERIA CURRENTLY USED IN NEI 99-02 REV D FOR DETERMINING THE AVAILABILITY OF EQUIPMENT WITHIN THE SCOPE OF MITIGATING SYSTEMS. HOWEVER, THESE LESS STRINGENT CRITERIA GIVE A MORE ACCURATE REPRESENTATION OF RISK IF THEY ACCURATELY DETERMINE THE ACTUAL STATUS OF EQUIPMENT AVAILABILITY TO PERFORM ITS FUNCTION. IT'S POSSIBLE THAT THESE LESS STRINGENT CRITERIA ARE STILL BEING USED ON A DAY-TO-DAY BASIS (E.G., TO ESTABLISH RISK PROFILES FOR ON-LINE MAINTENANCE). HAS THIS POTENTIAL CONFLICT BEEN RECOGNIZED (USING DIFFERENT DECISION CRITERIA FOR AVAILABILITY OF THE SAME EQUIPMENT, DEPENDING UPON WHAT PROCESS IS MAKING THE DECISION)? IS THERE AN EXPECTATION TO RECONCILE THIS? WHAT EFFECT DOES THIS HAVE UPON A PLANT'S PRA IF RISK ASSUMPTIONS ARE NO LONGER VALID USING 99-02 CRITERIA? IS THERE AN~~

~~EXPECTATION THAT AVAILABILITY DECISIONS FOR EQUIPMENT OUTSIDE THE SCOPE OF THE PERFORMANCE INDICATORS BE CONSISTENT WITH 99-02 CRITERIA? (FAQ ID 67)~~

~~It is recognized that there are differences in definitions between the NRC PIs, WANO indicators, maintenance rule, and IPEs. Industry and NRC will be working in year 2000 to try to reconcile indicator definitions. NEI 99-02 applies to NRC PIs and not to operability decisions or your PRA.~~

~~WHEN SHOULD QUARTERLY PERFORMANCE INDICATOR REPORTS BE SUBMITTED WHEN THE NORMAL SUBMITTAL DATE FALLS ON A SATURDAY, SUNDAY, OR HOLIDAY? (FAQ ID 121)~~

~~The performance indicator data reports are submitted to the NRC under 10 CFR 50.4 requirements. Per 10 CFR 50.4, if a submittal due date falls on Saturday, Sunday, or Federal holiday, the next Federal working day becomes the official due date.~~

APPENDIX D

Plant Specific Design Issues

This appendix identifies resolutions to performance indicator reporting issues that are specific to individual plant designs.

Oyster Creek

Issue: Oyster Creek does not have a high pressure coolant injection system. The function performed by the HPCI system is accomplished at the Oyster Creek station by a combination of pressure reduction using the Automatic Depressurization System (ADS) and injecting coolant into the vessel using the Core Spray System (low pressure coolant injection). The core spray system consists of two redundant trains each having redundant active components (pumps and valves).

Resolution: For the HPCS indicator, Oyster Creek will report system availability of the Core Spray System and consider ADS as a support function required for system operability. Note: Technical Specifications for Oyster Creek require plant shutdown if ADS is inoperable.

At this point, Oyster Creek will consider core spray as a two train system and consider similar configurations at other plants, the WANO definition, and how unavailability is reported to WANO.

Dresden Station

Issue: At Dresden Station, the RHR function as defined in NEI 99-02 is accomplished using both the Low Pressure Coolant Injection (LPCI) and the Shutdown Cooling (SDC) Systems. LPCI performs the suppression pool heat removal function while SDC performs the reactor core decay heat removal function.

The LPCI System has two parallel heat exchangers and the SDC System consists of three 100% capacity parallel trains. The configuration of the SDC system can be treated as two trains with one installed spare train as described in Section 2.2 of NEI 99-02.

Resolution: Dresden is utilizing two trains of LPCI and two trains of SDC to meet the reporting requirements of NEI 99-02. The third train of SDC should be treated as an installed spare and is subject to the reporting requirements in NEI 99-02.

Kewaunee and Point Beach

Issue: The Kewaunee and Point Beach sites have overlapping Emergency Planning Zones (EPZ). We report siren data to the Federal Emergency Management Agency (FEMA) grouped by criterion other than entire EPZs (such as along county lines). May we report siren data for the PIs in the same fashion to eliminate confusion and prevent 'double reporting' of sirens that exist in both EPZs? Kewaunee and Point Beach share a portion of EPZs and responsibility for the sirens has been divided along the county line that runs between the two sites. FEMA has accepted this, and so far the NRC has accepted this informally.

Resolution: The purpose of the Alert and Notification System Reliability PI is to indicate the licensee's ability to maintain risk-significant EP equipment. In this unique case, each neighboring plant maintains sirens in a different county. Although the EPZ is shared, the plants do not share the same site. In this case, it is appropriate for the licensees to report the sirens they are responsible for. The NRC Web site display of information for each site will contain a footnote recognizing this shared EPZ responsibility.

Surry, North Anna and Beaver Valley Unit 1

Issue: The Safety System Unavailability Performance Indicator for PWR RHR monitors:

- The ability of the RHR system to take a suction from the containment sump, cool the fluid, and inject at low pressure to the RCS, and

- The ability of the RHR system to remove decay heat from the reactor during normal shutdown for refueling and maintenance.

The RHR system for Surry Units 1 & 2, North Anna Units 1& 2 and Beaver Valley Unit 1 provides function 2, shutdown cooling, and does not provide for function 1, post accident recirculation cooling. Function 1, is provided by two 100% low head safety injection pumps taking suction from the containment sump and injecting to the RCS at low pressure and with the heat exchanger function (containment sump water cooling) provided by four 50% capacity containment recirculation spray system pumps and heat exchangers. How should the Safety system unavailability for these units be calculated?

Resolution: The RHR Performance Indicator should be calculated as follows. The RHR system should be counted as two trains of RHR providing decay heat removal, function 2. The low head safety injection and recirculation spray pumps and associated coolers should be counted as an additional two trains of RHR providing the post accident recirculation cooling, function 1.

Four trains should be monitored as follows:

Train 1 (recirculation mode)
"A" train consisting of the "A" LHSI pump, associated MOVS and the required "A" train recirculation spray pumps heat exchangers, and MOVS.

Train 2 (recirculation mode)
"B" train consisting of the "B" LHSI pump, associated MOVS and the required "B" train recirculation spray pumps, heat exchangers, and MOVS.

Train 3 (shutdown cooling mode)
"A" train consisting of the "A" RHR pump, associated MOVS and heat exchanger.

Train 4 (shutdown cooling mode)
"B" train consisting of the "B" RHR pump, associated MOVS and heat exchanger.

Beaver Valley Unit 2

Issue: The Safety System Unavailability Performance Indicator for PWR RHR monitors:

- The ability of the RHR system to take a suction from the containment sump, cool the fluid, and inject at low pressure to the RCS, and
- The ability of the RHR system to remove decay heat from the reactor during normal shutdown for refueling and maintenance.

The RHR system for Beaver Valley Unit 2 provides function 2, shutdown cooling, and does not provide for function 1, post accident recirculation cooling.

Function 1, is provided by two 100% containment recirculation spray pumps taking suction from the containment sump, and injecting to the RCS at low pressure. The heat exchanger function is provided by two 100% capacity containment recirculation spray system heat exchangers, one per train.

How should the safety system unavailability for BVPS Unit 2 be calculated?

Resolution: The RHR Performance Indicator should be calculated as follows. The two containment recirculation spray pumps and associated coolers should be counted as two trains of RHR providing the post accident recirculation cooling, function 1. The RHR system should be counted as two additional trains of RHR providing decay heat removal, function 2.

Four trains should be monitored as follows:

Train 1 (recirculation mode)

Consisting of the containment recirculation spray pump associated MOVS and the required recirculation spray pump heat exchanger and MOVS.

Train 2 (recirculation mode)

Consisting of containment recirculation spray pump associated MOVS and the required recirculation spray pump heat exchanger, and MOVS.

Train 3 (shutdown cooling mode)

Consisting of the "A" RHR pump, associated MOVS and heat exchanger.

Train 4 (shutdown cooling mode)

Consisting of the "B" RHR pump, associated MOVS and heat exchanger.

ANO-2, Calvert Cliffs, Fort Calhoun, Millstone 2, Palisades, Palo Verde, San Onofre, St. Lucie, and Waterford 3

For CE designed NSSS systems, the functions reported under the RHR SSU performance indicator are accomplished by multiple systems. How should CE plants collect and report data for this indicator?

Issue: The Safety System Unavailability Performance Indicator for PWR RHR monitors:

The ability of the RHR system to take a suction from the containment sump, cool the fluid, and inject at low pressure into the RCS, and·

The ability of the RHR system to remove decay heat from the reactor during normal shutdown for refueling and maintenance.

CE ECCS designs differ from the RHR description and typical figures in NEI 99-02. CE designs run all ECCS pumps during the injection phase (Containment Spray (CS), High Pressure Safety Injection (HPSI), and Low Pressure Safety Injection (LPSI)), and on Recirculation Actuation Signal (RAS), the LPSI pumps are automatically shutdown, and the suction of the HPSI and CS pumps is shifted to the containment sump. The HPSI pumps then provide the recirculation phase core injection, and the CS pumps by drawing inventory out of the sump, cooling it in heat exchangers, and spraying the cooled water into containment, support the core injection inventory cooling. How should CE designs report the RHR SSU Performance Indicator?

Resolution: For the first function: "The ability of the RHR system to take a suction from the containment sump, cool the fluid, and inject at low pressure into the RCS."

The CE plant design uses HPSI to "take a suction from the sump", CS to "cool the fluid", and HPSI to "inject at low pressure into the RCS". Due to these design differences, CE plants with this design should monitor this function in the following manner. The HPSI pumps and their suction valves are already monitored under the HPSI function, and no monitoring under the RHR

PI is necessary or required. The two containment spray pumps and associated coolers should be counted as two trains of RHR providing the post accident recirculation cooling.

For the second function: "The ability of the RHR system to remove decay heat from the reactor during normal shutdown for refueling and maintenance."

The CE plant design uses LPSI pumps to pump the water from the RCS, through the SDC heat exchangers, and back to the RCS. Due to this CE design difference, the SDC system should be counted as two trains of RHR providing the decay heat removal function.

Therefore, for the CE designed plants four trains should be monitored, when the particular affected function is required by Technical Specifications, as follows:

Train 1 (recirculation mode) Consisting of the "A" containment spray pump, the required spray pump heat exchanger and associated flow path valves.

Train 2 (recirculation mode) Consisting of the "B" containment spray pump, the required spray pump heat exchanger and associated flow path valves.

Train 3 (shutdown cooling mode) Consisting of the "A" SDC pump, associated flow path valves and heat exchanger.

Train 4 (shutdown cooling mode) Consisting of the "B" SDC pump, associated flow path valves and heat exchanger.

Note that required hours and unavailable hours will be determined by technical specification requirements, not "default hours."

Reporting of RHR data should follow this guidance beginning with the second quarter 2000 data submittal. Historical data was originally reported as two trains. A change report must be submitted to provide historical data for four trains. This can be accomplished in either of two ways:

1. Maintain Train 1 and Train 2 historical data as is. For Train 3 and 4, repeat Train 1 and Train 2 data.

2. Recalculate and revise all historical data using this guidance.

Provide comments with the change report to identify the manner in which the historical data has been revised.

Palo Verde

Issue: NEI 99-02, revision 0 states "Some plants have a startup feedwater pump that requires manual actuation. Startup feedwater pumps are not included in the scope of the AFW system for this indicator." Our plants have startup feedwater pumps that require manual actuation. They are not safety related, but they are credited in the safety analysis report as providing additional reliability/availability to the AFW system and are required by Technical Specifications to be operable in modes 1, 2 and 3. They are also included in the plant PRA and are classified as high risk significant. Should these pumps be treated as third train of auxiliary feedwater for NEI 99-02 monitoring purposes or does the startup feedwater pump exemption apply?

Resolution: Based on the information provided, these particular SSCs should be considered a third train of auxiliary feedwater for NEI 99-02 monitoring purposes.

North Anna

Issue: At North Anna Power Station only one part time CCTV camera is used as part of the PA perimeter threat assessment during refueling outages. With one part time CCTV camera, that has been reliable, we have not had any compensatory hours to report for this portion of the PI. This results in what might seem to be an artificially high performance index for this PI since the CCTV camera portion of the indicator is equally weighted with the IDS portion. Is it appropriate to continue to report CCTV camera compensatory hours for a site with a low number of and infrequently used CCTV cameras?

Resolution: Continue to report in accordance with the current guidance in NEI 99-02. That is, report compensatory hours for the part time CCTV camera as they occur. Put a note for this PI in the comments section submitted to the NRC similar to the following: "Performance data reflects zero, (or X), hours of CCTV camera operation during this reporting period."

Surry

Issue: At Surry Power Station only one full time CCTV camera is used as part of the PA perimeter threat assessment. With only one CCTV camera, that has been reliable, we have not had any compensatory hours to report for this portion of the PI. This results in what might seem to be an artificially high performance index for this PI since the CCTV camera portion of the indicator is equally weighted with the IDS portion. Is it appropriate to continue to report CCTV camera compensatory hours for a site with such a low number of CCTV cameras?

Resolution: Continue to report in accordance with the current guidance in NEI 99-02. That is, report compensatory hours for the single CCTV camera as they occur. Put a note for this PI in the comment section submitted to the NRC similar to the following: "Performance data reflects one CCTV camera."

Indian Point 3

Issue: Regarding the HPSI indicator, our plant has a unique flow path for high head recirculation. If this flow path was found isolated by a manual valve, would fault exposure hours necessarily be counted, even if the main flow path was available?

Our plant has three trains of HPSI with three intermediate pressure pumps fed by separate safety related power supplies. Our three trains share common suction supplies. For the recirculation phase of an accident, two HPSI pumps are required in the short term if the event was a small break LOCA. For a large break LOCA, the HPSI pumps are not required until we transfer to hot leg recirculation, which is required to occur between 14 and 23.4 hours after the LOCA. During high head recirculation (hot or cold leg), the HPSI suction is supplied by the output of low head pumps. We have two internal SI Recirculation pumps located in the containment that provide the primary choice for low head recirculation and for supplying the suction of the HPSI pumps. The external RHR pumps provide a backup to the internal SI Recirculation pumps for both functions. Both sets of pumps deliver flow through the RHR HXs that can then be routed to a common header for the suction of the HPSI pumps.

In the case of a passive failure requiring the isolation of the flow path to the common HPSI suction piping, we have a unique design in that a separate flow path is installed to deliver a suction supply to just one of our three SI pumps (specifically, the 32 SI pump). This flowpath bypasses the RHR HXs and would deliver sump fluid directly from the RHR pump discharge to the suction of the 32 SI pump. The internal recirculation pumps can not support this flowpath, but they can still be run for containment heat removal via recirculation spray if required. This alternate low to high head flowpath does not fit into the typical "train" design common in the industry because it is not used in the event of any active failure, and it relies on powering pumps and valves from all 3 of our EDGs. Our system is also unique in that loss of the alternate flow path is not a failure that equates to the NEI guidance. It appears that the mispositioning of a valve in the designs of the NEI guidance would cause the loss of one of two trains used for high head injection considering either and active or passive failure.

The mispositioning of the valve was reported in LER 2000-001. The LER reported a bounding risk assessment since the IPE does not model the passive failure flow path to the HHSI pumps header. The risk assessment determined that the core damage frequency (CDF) would be approximately 3E-8 per year with a conditional CDF of approximately 7.5E-9 for a period of three months (approximate time of valve misposition). This is not risk significant.

Resolution: The fault exposure hours do not have to be counted. Except as specifically stated in the indicator definition and reporting guidance, no attempt is made to monitor or give credit in the indicator results for the presence of other systems (or sets of components) that add diversity to the mitigation or prevention of accidents. The passive failure mitigation features described as supporting the high head recirculation function, while serving a system diversity function, are not included as part of the high head safety injection system components monitored for this indicator.

Grand Gulf

Issue: Of the 43 sirens associated with our Alert Notification System, two of the sirens are located in flood plain areas. During periods of high river water, the areas associated with these sirens are inaccessible to personnel and are uninhabitable. During periods of high water, the electrical power to the entire area and the sirens is turned off. The frequency and duration of this occurrence varies based upon river conditions but has occurred every year for the past five years and lasts an average of two months on each occasion.

Assuming the sirens located in the flood plain areas are operable prior to the flooded and uninhabitable conditions, would these sirens be required to be included in the performance indicator during flooded conditions?

Resolution: If sirens are not available for operation due to high flood water conditions and the area is deemed inaccessible and uninhabitable by State and/or Local agencies, the siren(s) in question will not be counted in the numerator or denominator of the Performance Indicator for that testing period.

Crystal River Unit 3 (CR-3)

Issue: CR-3 has two EF System pumps and associated piping systems that are credited for Design Basis Accidents of Loss of Main Feedwater, Main Feedwater Line Break, Main Steam Line Break, and Small Break LOCA. A design criterion for the EF System is that a maximum time limit of 60 seconds from initiation signal to full flow shall not be exceeded for automatic initiation. Pumps EFP-2 (steam turbine driven) and EFP-3 (independent diesel driven) are auto-start pumps and are tested for the 60-second time criteria. EFP-3 was installed in 1999 to replace a third pump, the electric motor driven (EFP-1) pump, due to emergency diesel generator electrical loading concerns in certain accident scenarios.

Per FSAR Section 10.5.2, "MAR [modification approval record] 98-03-01-02 installed a diesel driven Emergency Feedwater Pump (EFP-3) to functionally replace the motor driven Emergency Feedwater Pump (EFP-1) as the "A" EF Train."

The motor driven pump does not receive an automatic start signal. The motor driven pump is interlocked with the diesel driven pump so that if the diesel driven pump is operating, EFP-1 will be tripped or its start inhibited. The motor driven pump is maintained for defense-in-depth. EFP-1 can be used to transfer water from the condenser hotwell into the steam generators during a seismic event, if long term cooling is necessary. EFP-1 can be used as a backup to EFP-2 to supply EFW to the steam generators for fires in the Main Control Room, Cable Spreading Room, and Control Complex HVAC Room.

CR-3 is reporting RROP safety system unavailability performance indicator data on the basis of two EF pumps and trains. CR-3 is not reporting on EFP-1. CR-3 design and usage of EFP-1 does not fit the NEI definition of either an "installed spare" or a "redundant extra train" as given on pages 30 and 31 of NEI 99-02, Rev. 0.

EFP-1 is safety-related and tested. However, EFP-1 is not required to be OPERABLE in any MODE in accordance with the Improved Technical Specifications (ITS). EFP-1 cannot replace EFP-3 to meet two train EFW ITS requirements. EFP-1 is included in the PRA but is not a "risk significant" component. EFP-1 is credited in the FSAR as noted above for providing defense-in depth and maintained for potential use in certain seismic and Appendix R conditions.

Should this be reported as a third train of AFW?

Resolution: No, since the pump has no operability requirements in the Technical Specifications.

Crystal River Unit 3 (CR-3)

Issue: CR-3 has an independent motor driven pump and independent piping system for the Auxiliary Feedwater (AFW) System that is separate from the EF System. The AFW pump (FWP-7) and associated components are designed to provide an additional non-safety grade source of secondary cooling water to the steam generators should a loss of all main and EF occur. This reduces reliance on the High Pressure Injection/Power Operated Relief Valve (HPI/PORV) mode of long term cooling. This AFW source was added to CR-3 in 1988 in response to NRC concerns on the issue of EF reliability (Generic Issue 124).

Per the FSAR, "The AFW source is non-safety grade and is not Class 1E powered or electrically connected to the emergency diesel generators. As such, it is not relied upon during design basis events and is intended for use on an "as available" basis only. AFW performs no safety function and there is no impact on nuclear safety if it fails to operate.....It is not environmentally qualified nor Appendix R protected.....Although the AFW source is non-safety grade it is credited by the NRC as a compensating feature in enhancing the reliability of secondary decay heat removal. Auxiliary feedwater may be used, as defense-in depth, during emergency situation when steam generator pressure has been reduced to the point where EFP-2 is no longer available or to avoid EFP-2 cyclic operation."

FWP-7 is powered by an independent, non-safety related, diesel. FWP-7 is a manually started pump and the associated control valves are manually controlled from the Main Control Room.

FWP-7 is not safety related.

FWP-7 is not required by ITS to be OPERABLE in any MODE.

FWP-7 cannot replace either EFP-2 or EFP-3 to meet two train EFW ITS requirements. CR-3 design and usage of FWP-7 does not fit the NEI definition of either an "installed spare" or a "redundant extra train" as given on pages 30 and 31 of NEI 99-02, Rev. 0.

FWP-7 is credited in the FSAR for providing defense-in depth and as an additional source non-safety grade source of secondary cooling water to steam generators.

Should this be reported as a third train of AFW?

Resolution: No, since the pump has no operability requirements in the Technical Specifications.

Indian Point 2, Indian Point 3

Issue: The ECCS designs for Indian Point 2 and Indian Point 3 include two safety injection recirculation pumps, the recirculation sump inside containment, piping and associated valves located inside containment, and two RHR/LHSI pumps, piping, containment sump (dedicated to RHR pumps), two RHR heat exchangers and associated valves. These two subsystems are identified in the Technical Specifications and FSAR. The RHR/LHSI system is automatically started on an SI, takes suction from the RWST as do the high head SI pumps (3), provides water in the injection phase of an accident, and is secured during the transfer to the recirculation phase of the accident. The recirculation pumps remain in standby in the injection phase and are started by operator action during switchover for the recirculation phase. The recirculation pumps (2) take suction from their dedicated sump and have the capability to feed the low head injection lines, the containment spray headers, and the suction of the high head SI pumps for high head injection. The RHR head exchangers can provide cooling for both the RHR and recirculation flowpaths. The recirculation pumps are inside containment and can not be tested during operation

The RHR pumps perform the normal decay heat removal function during shutdown operations, and can also be aligned for post accident recirculation. However, the two redundant recirculation pumps represent the primary providers of the low head recirculation function. If a single active failure were to occur, then one recirculation pump would remain available and provides sufficient capacity to meet the core and containment cooling requirements. Only in the event of a passive failure or multiple active failures would it be necessary to align the RHR pumps for recirculation. Use of the RHR pumps for recirculation requires opening two motor operated valves aligned in series to allow suction from the containment sump.

How should the recirculation subsystem unavailability be reported under the mitigating system PI for RHR?

Resolution: The Safety System Unavailability Performance Indicator for RHR monitors two functions:

The ability of the RHR system to draw suction from the containment sump, cool the fluid, inject at low pressure to the RCS, and
The ability of the RHR System to remove decay heat from the reactor during normal shutdown for refueling and maintenance.

At Indian Point Units 2 & 3, the two SI Recirculation Pumps and associated valves and components should be counted as two trains of RHR providing post accident recirculation cooling, function 1. The two RHR pumps and associated valves and components should be counted as two trains of RHR providing decay heat removal, function 2. The RHR Heat Exchangers and associated components and valves which serve both RHR and recirculation functions should be shared by an RHR and an SI Recirculation Pump train, functions 1 and 2.

The two RHR pumps are also capable of providing backup to function 1. Except as specifically stated in the indicator definition and reporting guidance, no attempt is made to monitor or give credit in the indicator results for the presence of other systems (or sets of components) that add diversity to the mitigation or prevention of accidents. The RHR pump suction flowpath from the Containment Sump provides passive failure mitigation features which, while supporting a system diversity function, are not included as part of the RHR system components monitored for this indicator.

Four (4) trains should be monitored as follows:

Train 1 (shutdown cooling mode)
"A" train consisting of the "A" RHR pump, "A" RHR heat exchanger, and associated valves.

Train 2 (shutdown cooling mode)
"B" train consisting of the "B" RHR pump, "B" RHR heat exchanger, and associated valves.

Train 3 (recirculation mode)
"A" train consisting of the "A" SI Recirculation pump, "A" RHR heat exchanger, and associated valves.

Train 4 (recirculation mode)
"B" train consisting of the "B" SI Recirculation pump, "B" RHR heat exchanger, and associated valves.

The required hours for trains 1 & 2 differ from trains 3 & 4, and will be determined using existing guidelines. Reporting of RHR data should follow this guidance beginning with the first quarter 2001 data submittal.

Catawba Site

Issue: A recently issued FAQ for the NRC Performance Indicators Program revised the positions taken for unavailability associated with planned overhaul hours. FAQ 178 was withdrawn from NEI 99-02 and replaced with FAQ 219. The new FAQ, effective for fourth quarter reporting, adds two clarifying questions and answers to the previous FAQ 178. These two additional items are:

Q. What is considered to be a major component for overhaul purposes?

A. A major component is a prime mover - a diesel engine or, for fluid systems, the pump or its motor or turbine driver or heat exchangers.

Q. Does the limitation on exemption of planned unavailable hours due to overhaul maintenance of "once per train per operating cycle" extend to support systems for a monitored system?

A. For this indicator, only planned overhaul maintenance of the four monitored systems (not to include support systems) may be considered for the exemption of planned unavailable hours.

At Catawba Nuclear Station, periodic testing indicated that crud and rust accumulation in the Nuclear Service Water System (NSWS) headers and piping was reducing water flow. To restore the water flow and the prevent further deterioration of the headers and piping, a refurbishment project was planned to clean the system, replace part of the piping, and rearrange certain piping access to the headers to avoid water stagnation. Since the NSWS is a shared system between both Catawba units, it was decided that the optimum time to perform this work would be while Unit 1 was in a refueling outage and Unit 2 was at power. This project included both "A" and "B" redundant trains of the system and was sequenced independently during the recent Catawba Nuclear Station Unit 1 End of Cycle 12 (1EOC12) refueling outage. Approximately 8,000 feet of piping was cleaned that included 4,260 feet of 42 inch, 760 feet of 30 inch, 330 feet of 24 inch, 660 feet of 18 inch, 1,935 feet of 10 inch, and 100 feet of 8 inch. Due to the extensive nature of the work performed, each train of NSWS was unavailable for approximately ten days.

Applicable technical specifications were revised through the standard NRC approval process (reference Amendment No. 189 to FOL NPF-35 and Amendment No. 182 to FOL NPF-52 approved October 4, 2000) to allow this project to be performed. These amendments allowed specific systems, including mitigating systems monitored under the NRC performance indicator program, to be inoperable beyond the normal technical specification allowable outage times (AOT) of 72 hours for up to a total of 288 hours on a one-time basis. A significant part of the justification for the license amendment request was a discussion of the risk assessment of the proposed change and the NRC concluded in the SER that the results and insights of the risk analysis supported the proposed temporary AOT extensions.

The NSWS itself is not a monitored system under the performance indicators; however, its unavailability does affect various systems and components, many of which are considered major components by the definition contained in FAQ 219 (diesel engines, heat exchangers, and pumps). The specific performance indicators affected by unavailability of the NSWS are contained in the Mitigating Systems Cornerstone and include: Emergency AC Power System Unavailability, High Pressure Safety Injection System Unavailability, Auxiliary Feedwater System Unavailability, and Residual Heat Removal System Unavailability. If the hours that this overhaul of the NSWS made its supported systems unavailable cannot be excluded from reporting under the performance indicators, it will result in Catawba Unit 2 reporting two white indicators for the 4Q2000 data. These two white indicators for Emergency AC Power System Unavailability and Residual Heat Removal System Unavailability would result in a degraded cornerstone situation as defined in the NRC Action Matrix. Additionally, since these indicators are twelve quarter averages, carrying these hours for the next three years would result in decreased margin to the white/yellow threshold and greatly increase the consequences of additional unavailable hours that might occur during that period of time.

Based on input from NRC and NEI individuals who participated in discussions related to FAQ 219, Duke Energy understands that there was a desire to eliminate exclusion of monitored systems unavailable hours caused by minor "overhaul" type activities on supporting systems. However, it seems unreasonable to require reporting of unavailable hours for situations such as this when the overhaul activities are extensive enough to have required NRC review and approval of a change in technical specifications to allow the increased AOT.

Should this situation be counted?

Resolution: For this plant specific situation, the planned overhaul hours for the nuclear service water support system may be excluded from the computation of monitored system unavailabilities.

Such exemptions may be granted on a case-by-case basis. Factors considered for this approval include (1) the results of a quantitative risk assessment of the overhaul activity, (2) the expected improvement in plant performance as a result of the overhaul, and (3) the net change in risk as a result of the overhaul.

Diablo Canyon Units 1 and 2

Issue: At Diablo Canyon (DC), intrusion of marine debris (kelp and other marine vegetation) at the circulating water intake structures can occur and, under extreme storm conditions result in high differential pressure across the circulating water traveling screens, loss of circulating water pumps and loss of condenser. Over the past several years, DC has taken significant steps, including changes in operating strategy as well as equipment enhancements, to reduce the vulnerability of the plant to this phenomenon. DC has also taken efforts to minimize kelp, however environmental restrictions on kelp removal and the infeasibility of removing (and maintaining removal of) extensive marine growth for several miles around the plant prevent them from eliminating the source if the storm-driven debris. To minimize the challenge to the plant under storm conditions which could likely result in loss of both circulating water pumps, DC procedurally reduces power to 25% power or less. From this power level, the plant can be safely shut down by control rod motion and use of atmospheric dump valves without the need for a reactor trip.

Is this anticipatory plant shutdown in response to an external event, where DC has taken all reasonable actions within environmental constraints to minimize debris quantity and impact, able to be excluded from being counted under IE01 and IE02?

Resolution: In consideration of the intent of the performance indicators and the extensive actions taken by PG&E to reduce the plant challenge associated with shutdowns in response to severe storm-initiated debris loading, the following interpretation will be applied to Diablo Canyon. A controlled shutdown from reduced power (less than 25%), which is performed in conjunction with securing of the circulating water pumps to protect the associated traveling screens from damage due to excessive debris loading under severe storm conditions, will not be considered a "scram." If, however, the actions taken in response to excessive debris loading result in the initiation of a reactor trip (manual or automatic), the event would require counting under both the Unplanned Scrams (IE01) and Scrams with a Loss of Normal Heat Removal (IE02) indicators.

APPENDIX E

Frequently Asked Questions

The following table identifies where NRC approved FAQs were incorporated in the text. Not all FAQs have been directly included in the text. (For example, some FAQs were withdrawn; others, early in the program, asked basic questions whose answer was already in the text; and some asked questions not directly related to the PI Guideline.)

Section	FAQs
Introduction	121,217
Unplanned Scrams per 7,000 Critical Hours	5,159,
Scrams with a Loss of Normal Heat Removal	4,65,180,204,220,238,248,249
Unplanned Power Changes per 7,000 Critical Hours	1,2,3,6,156,158,166,227,228,231,237,244
Safety System Unavailability	11,12,13,14,17,18,19,21,73,74,86,87,88,145, 146,147,148,149,150,151,152,153,154,155,16 4 , 165, 167, 168, 171,175,176,192,199, 201,218,219222,225,239,241,247, 252
Safety System Functional Failure	144
Reactor Coolant System Specific Activity	22,23,24,25,177,226
Reactor Coolant System Leakage	
EP Drill/Exercise Performance	27,29,30,34,36,37,41,43,125,173,197,198,202, 235, 242,243,
ERO Drill Participation	44,45,50,,53,54,85,233,234
Alert and Notification System Reliability	123,174,229,232,246
Occupational Exposure Control Effectiveness	92,93,95,96,103,104,107,109,111,112,130, 131,132,203,240
RETS/ODCM Radiological Effluent Occurrence	90
Protected Area Security Equipment Performance Index	59,60,61,68,77,80,81,82,83,136,137,138, 139,140,141,160,162,163,184,185,189, 230,250,253
Personnel Screening Program Performance	127,128,133,134
Fitness-For-Duty/Personnel Reliability Program Performance	58,127,128,129
Appendix D	15,71,172,182,183,184,185,188,200,205,206, 236, 255,254
Withdrawn	113,114,115,116,117,118,119,120,142,169, 178, 190,193